MISTY LANE RECONSTRUCTION

Contract No. BE22-217

File No. 2147

CITY AND BOROUGH OF JUNEAU

ALASKA'S CAPITAL CITY

ENGINEERING DEPARTMENT

SECTION 00005 - TABLE OF CONTENTS

DIVISION 0 - BIDDING AND CONTRACT REQUIREMENTS, CONTRACT FORMS, AND CONDITIONS OF THE CONTRACT

BIDDING and CONTRACT REQUIREMENTS		No. of Pages
00005	Table of Contents	1
00030	Notice Inviting Bids	2
00100	Instructions to Bidders	9
00300	Bid	2
00310	Bid Schedule	2
00320	Bid Bond	1
00360	Subcontractor Report	2
00370	Contractor Financial Responsibility	3
CONTRACT FORMS		
00500	Agreement	6
00610	Performance Bond	2
00620	Payment Bond	2
CONDITIONS OF THE CONTRACT		
00700	General Conditions	47
00800	Supplementary General Conditions	8
00830	Alaska Labor Standards, Reporting, and Prevailing Wage Rate Determination	1
	Appendix A – Pamphlet 600	39
00853	Standard Details	2
Special Provisions		126

DRAWINGS

See Cover Sheet of Drawings for Drawing Index

END OF SECTION

SECTION 00030 NOTICE INVITING BIDS

OBTAINING CONTRACT DOCUMENTS. The Contract Documents are entitled:

Misty Lane Reconstruction
Contract No. BE22-217

The Contract Documents may be downloaded from the CBJ Public Purchase webpage at https://www.publicpurchase.com/juneau,ak. Instructions for the Public Purchase registration process can be found here https://juneau.org/engineering-public-works/bids-rfps.

PRE-BID CONFERENCE. Prospective Bidders are encouraged to attend a pre-Bid conference to discuss the proposed WORK, which will be conducted by the OWNER, February 16, 2022, at 10:00 a.m. via teleconference. The object of the conference is to acquaint Bidders with the bid documents and site conditions. Prospective bidders intending to participate shall email contracts@juneau.org by 4:30 p.m., February 15, 2022, to obtain the call-in instructions.

DESCRIPTION OF WORK. The WORK covered in the Contract Documents generally includes: reconstruction of Misty Lane from Horizon Drive through the cul-de-sac. WORK will include the replacement of the water main and services, replacement of existing sanitary sewer lift station, replacement of one sanitary sewer service, installation of sewer service cleanouts, and installation of new storm drain system, 2" minus shot rock with D-1 base course, asphalt pavement and other miscellaneous WORK.

ENGINEER'S ESTIMATE RANGE: Between $650,000 and $750,000.

COMPLETION OF WORK. The WORK must be completed by September 15, 2022, or 75 days from commencement of work, whichever occurs first.

DEADLINE FOR BIDDER QUESTIONS: February 22, 2022, no later than 4:30pm Alaska Time.

DEADLINE FOR BIDS: Electronic bids must be received by the Purchasing Division **prior to 2:00 p.m., Alaska Time on March 1, 2022,** or such later time as may be announced by addendum at any time prior to the deadline. Bids will be opened immediately thereafter via conference call, unless otherwise specified. Bidders may attend this bid opening on the conference call line 907-713-2140, with participant code 258358.

SUBMISSION INSTRUCTIONS: Timely responses are accepted via Electronic Submission at Public Purchase, www.publicpurchase.com, the CBJ's eProcurement Provider. Bidders must register online prior to submitting a bid, it may take up to 24 hours for registration to be complete.

Late responses will not be accepted.

To Respond, Bidders must complete an online registration.

- Registration is a two-step process, registering with Public Purchase, and then registering with CBJ within Public Purchase.
- Get help registering using the Public Purchase Help Menu Tab.
- Register early to avoid missing the deadline, as Registration may take up to 24 hours to complete.

Registered Bidders may submit a Bid Schedule to Public Purchase by downloading the provided PDF solicitation documents, filling out the fields indicated, and uploading the document to Public Purchase.

SITE OF WORK. The site of the WORK is Misty Lane in the Bayview Subdivision near Douglas, Alaska.

SECTION 00030 NOTICE INVITING BIDS

BIDDING, CONTRACT, or TECHNICAL QUESTIONS. All communications relative to this WORK, prior to opening Bids, shall be directed to the following:

Caleb Comas, Contract Administrator
CBJ Engineering Department, 3rd Floor, Marine View Center
Email: caleb.comas@juneau.org
Telephone: (907) 586-0800 ext. 4196
Fax: (907) 586-4530

BID SECURITY. Each Bid shall be accompanied by a certified or cashier's check or Bid Bond, in the amount of 5% percent of the Bid, payable to the City and Borough of Juneau, Alaska, as a guarantee that the Bidder, if its Bid is accepted, will promptly execute the Agreement. A Bid shall not be considered unless one of the forms of Bidder's security is provided as prescribed in Section 00100, Article 12, at the time of bid.

CONTRACTOR'S LICENSE. All contractors are required to have a current Alaska Contractor's License, prior to submitting a Bid, and a current Alaska Business License prior to award.

BID TO REMAIN OPEN. The Bidder shall guarantee the Bid for a period of 120 Days from the date of Bid opening. Any component of the Bid may be awarded anytime during the 120 Days.

OWNER'S RIGHTS RESERVED. The OWNER reserves the right to reject any or all Bids, to waive any informality in a Bid, and to make award to the lowest responsive, responsible Bidder as it may best serve the interests of the OWNER.

OWNER: City and Borough of Juneau

By: _____ 2/8/22
Caleb Comas, Contract Administrator Date

END OF SECTION

SECTION 00100 - INSTRUCTIONS TO BIDDERS

1.0 DEFINED TERMS. Terms used in these Instructions to Bidders and the Notice Inviting Bids, which are defined in the General Conditions, have the meanings assigned to them in the General Conditions. The term "Bidder" means one who submits a Bid directly to the OWNER, as distinct from a sub-bidder, who submits a Bid to a Bidder.

2.0 INTERPRETATIONS AND ADDENDA.

A. INTERPRETATIONS. All questions about the meaning or intent of the Contract Documents are to be directed to the Engineering Contracts Administrator. Interpretations or clarifications considered necessary by the Engineering Contracts Administrator in response to such questions will be issued by Addendum, mailed, faxed, or delivered to all parties recorded by the Engineering Contracts Administrator, or OWNER, as having received the Contract Documents. Questions received less than seven Days prior to the Deadline for Bids may not be answered. Only questions answered by formal written Addendum will be binding. Oral and other interpretations or clarifications will be without legal effect.

B. ADDENDA. Addenda may be issued to modify the Contract Documents as deemed advisable by the OWNER. Addenda may be faxed or, if addendum format warrants, addenda may be posted to the CBJ Engineering Department website. In any event, notification of addendum issuance will be faxed to planholders. Hard copies are available upon request. The OWNER will make all reasonable attempts to ensure that all planholders receive notification of Addenda, however, it is strongly recommended by the OWNER that bidders independently confirm the contents, number, and dates of each Addendum prior to submitting a Bid.

3.0 FAIR COMPETITION. More than one Bid from an individual, firm, partnership, corporation, or association under the same or different names will not be considered. If the OWNER believes that any Bidder is interested in more than one Bid for the WORK contemplated, all Bids in which such Bidder is interested will be rejected. If the OWNER believes that collusion exists among the Bidders, all Bids will be rejected.

4.0 RESPONSIBILITY OF BIDDERS. Only responsive Bids from responsible Bidders will be considered. A Bid submitted by a Bidder determined to be not responsible may be rejected. The OWNER may find a bidder to be not responsible for any one of the following reasons, but is not limited in its responsibility analysis to the following factors:

A. Evidence of bid rigging or collusion;

B. Fraud or dishonesty in the performance of previous contracts;

C. Record of integrity;

D. More than one bid for the same work from an individual, firm, or corporation under the same or different name;

E. Unsatisfactory performance on previous or current contracts;

F. Failure to pay, or satisfactorily settle, all bills due for labor and material on previous contracts;

G. Uncompleted work that, in the judgment of the OWNER, might hinder or prevent the

bidder's prompt completion of additional work, if awarded;

H. Failure to reimburse the OWNER for monies owed on any previous contracts;

I. Default under previous contracts;

J. Failure to comply with any qualification requirements of the OWNER; special standards for responsibility, if applicable, will be specified. These special standards establish minimum standards or experience required for a responsible Bidder on a specific contract;

K. Engaging in any activity that constitutes a cause for debarment or suspension under the CBJ Procurement Code 53.50 or submitting a bid during a period of debarment;

L. Lack of skill, ability, financial resources, or equipment required to perform the contract.

M. Lack of legal capacity to contract.

N. Bidders must be registered as required by law and in good standing for all amounts owed to the OWNER per Paragraph 21.0 of this Section.

O. Failure to submit all completed documents as required and specified on the Bid Form, Section 00300.

Nothing contained in this section deprives the OWNER of its discretion in determining the lowest responsible bidder. Before a Bid is considered for award, a Bidder may be requested to submit information documenting its ability and competency to perform the WORK, according to general standards of responsibility and any special standards which may apply. It is Bidder's responsibility to submit sufficient, relevant, and adequate information. OWNER will make its determination of responsibility and has no obligation to request clarification or supplementary information.

5.0 NON-RESPONSIVE BIDS. Only responsive Bids will be considered. Bids may be considered non-responsive and may be rejected. Some of the reasons a Bid may be rejected for being non-responsive are:

A. If a Bid is received by the CBJ Purchasing Division after the Deadline for Bids.

B. If the Bid is on a form other than that furnished by the OWNER, or legible copies thereof; or if the form is altered or any part thereof is detached; or if the Bid is improperly signed.

C. If there are unauthorized additions, conditional or alternate Bids, or irregularities of any kind which may tend to make the bid incomplete, indefinite, ambiguous as to its meaning, or in conflict with the OWNER's Bid document.

D. If the Bidder adds any unauthorized conditions, limitations, or provisions reserving the right to accept or reject any award, or to enter into a contract pursuant to an award. This does not exclude a Bid limiting the maximum gross amount of awards acceptable to any one Bidder at any one Bid opening, provided that any selection of awards will be made by the OWNER.

E. If the Bid does not contain a Unit Price for each pay item listed, except in the case of authorized alternate pay items.

F. If the Bidder has not acknowledged receipt of each Addendum.

G. If the Bidder fails to furnish an acceptable Bid guaranty with the Bid.

H. If any of the Unit Prices Bid are excessively unbalanced (either above or below the amount of a reasonable Bid) to the potential detriment of the OWNER.

I. If a Bid modification does not conform to Article 15.0 of this Section.

J. Failure to submit all completed documents as required and specified on the Bid Form, Section 00300.

6.0 BIDDER'S EXAMINATION OF CONTRACT DOCUMENTS AND SITE. It is the responsibility of each Bidder before submitting a Bid:

A. To examine thoroughly the Contract Documents, and other related data identified in the Bidding documents (including "technical data" referred to below):

1. To visit the site to become familiar with and to satisfy the Bidder as to the general and local conditions that may affect cost, progress, or performance, of the WORK,
2. To consider federal, state and local laws and regulations that may affect cost, progress, or performance of the WORK,
3. To study and carefully correlate the Bidder's observations with the Contract Documents, and other related data; and
4. To notify the ENGINEER of all conflicts, errors, or discrepancies in or between the Contract Documents and such other related data.

7.0 REFERENCE IS MADE TO THE SUPPLEMENTARY GENERAL CONDITIONS FOR IDENTIFICATION OF:

A. Those reports of explorations and tests of subsurface conditions at the site which have been utilized by the Engineer of Record in the preparation of the Contract Documents. The Bidder may rely upon the accuracy of the technical data contained in such reports, however, the interpretation of such technical data, including any interpolation or extrapolation thereof, together with non-technical data, interpretations, and opinions contained therein or the completeness thereof is the responsibility of the Bidder.

B. Those Drawings of physical conditions in or relating to existing surface and subsurface conditions (except underground utilities) which are at or contiguous to the site have been utilized by the Engineer of Record in the preparation of the Contract Documents. The Bidder may rely upon the accuracy of the technical data contained in such Drawings, however, the interpretation of such technical data, including any interpolation or extrapolation thereof, together with nontechnical data, interpretations, and opinions contained in such Drawings or the completeness thereof is the responsibility of the Bidder.

C. Copies of such reports and Drawings will be made available by the OWNER to any Bidder on request if said reports and Drawings are not bound herein. Those reports and Drawings are not part of the Contract Documents, but the technical data contained therein upon which the Bidder is entitled to rely, as provided in Paragraph SGC-4.2 of the Supplementary General Conditions, are incorporated herein by reference.

D. Information and data reflected in the Contract Documents with respect to underground utilities at or contiguous to the site is based upon information and data furnished to the OWNER and the Engineer of Record by the owners of such underground utilities or others, and the OWNER does not assume responsibility for the accuracy or completeness thereof unless it is expressly provided otherwise in the Supplementary General Conditions, or in Section 01530 - Protection and Restoration of Existing Facilities of the General Requirements.

E. Provisions concerning responsibilities for the adequacy of data furnished to prospective Bidders on subsurface conditions, underground utilities and other physical conditions, and possible changes in the Contract Documents due to differing conditions appear in Paragraphs 4.2, 4.3, and 4.4 of the General Conditions.

F. Before submitting a Bid, each Bidder will, at Bidder's own expense, make or obtain any additional examinations, investigations, explorations, tests, and studies and obtain any additional information and data which pertain to the physical conditions (surface, subsurface, and underground utilities) at or contiguous to the site or otherwise which may affect cost, progress, or performance of the WORK and which the Bidder deems necessary to determine its Bid for performing the WORK in accordance with the time, price, and other terms and conditions of the Contract Documents.

G. On request in advance, the OWNER will provide each Bidder access to the site to conduct such explorations and tests as each Bidder deems necessary for submission of a Bid. Bidder shall fill all holes and shall clean up and restore the site to its former condition upon completion of such explorations.

H. The lands upon which the WORK is to be performed, rights-of-way and easements for access thereto and other lands designated for use by the CONTRACTOR in performing the WORK are identified in the Contract Documents. All additional lands and access thereto required for temporary construction facilities or storage of materials and equipment are to be provided by the CONTRACTOR. Easements for permanent structures or permanent changes in existing structures are to be obtained and paid for by the OWNER unless otherwise provided in the Contract Documents.

I. The submission of a Bid will constitute an incontrovertible representation by the Bidder that the Bidder has complied with every requirement of Article 6.0, "Bidder's Examination of Contract Documents and Site" herein, that without exception the Bid is premised upon performing the WORK required by the Contract Documents and such means, methods, techniques, sequences, or procedures of construction as may be indicated in or required by the Contract Documents, and that the Contract Documents are sufficient in scope and detail to indicate and convey understanding of all terms and conditions for performance of the WORK.

8.0 BID FORM.

A. The Bid shall be made on the Bid Schedule(s) bound herein, or by another acceptable submission method as specified in Section 00030, Notice Inviting Bids, and shall contain the following: Sections 00300, 00310 or other specified acceptable form of Bid Schedule, the required Bid Security, and any other documents required in Section 00300 – Bid.

B. All blanks on the Bid Form and Bid Schedule must be completed in ink or typed.

C. Bids by corporations must be executed in the corporate name by the president, a vice-president (or other corporate officer). The corporate address and state of incorporation must appear below the signature.

D. Bids by partnerships must be executed in the partnership name and be signed by a managing partner, and the official address of the partnership must appear below the signature.

E. The Bidder's Bid must be signed. All names must be printed or typed below the signature.

F. The Bid shall contain an acknowledgment of receipt of all Addenda, the numbers of which shall be filled in on the Bid form. Failure to acknowledge Addenda may render Bid non-responsive and may cause its rejection.

G. The address to which communications regarding the Bid are to be directed must be shown.

9.0 QUANTITIES OF WORK. The quantities of WORK, or material, stated in Unit Price items of the Bid are supplied only to give an indication of the general scope of the WORK; the OWNER does not expressly or by implication agree that the actual amount of WORK, or material, will correspond therewith, and reserves the right after award to increase or decrease the amount of any Unit Price item of the WORK by an amount up to and including 25 percent of any Bid item, without a change in the Unit Price, and shall include the right to delete any Bid item in its entirety, or to add additional Bid items up to and including an aggregate total amount not to exceed 25 percent of the Contract Price (see Section 00700 - General Conditions, Article 10 Changes In the WORK).

10.0 SUBSTITUTE OR "OR-EQUAL" ITEMS. Substitution requests are not accepted during the bidding process. The procedure for the submittal of substitute or "or-equal" products is specified in the Specials Provisions.

11.0 SUBMISSION OF BIDS. The Bid shall be delivered by the time and to the place stipulated in Section 00030 - Notice Inviting Bids. It is the Bidder's sole responsibility to see that its Bid is received in proper time. Hand-delivered, mailed, courier-delivered, oral, telegraphic, emailed, or faxed Bids will not be considered.

12.0 BID SECURITY, BONDS, AND INSURANCE. Each Bid shall be accompanied by a certified, or cashier's check, or approved Bid Bond in an amount of at least 5 percent of the total Bid price. The "total Bid price" is the amount of the Base Bid, plus the amount of alternate Bids, if any, which total to the maximum amount for which the CONTRACT could be awarded. Said check or Bond shall be made payable to the OWNER and shall be given as a guarantee that the Bidder, if offered the WORK, will enter into an Agreement with the OWNER, and will furnish the necessary insurance certificates, Payment Bond, and Performance Bond; each of said Bonds, if required, and insurance amounts shall be as stated in the Supplementary General Conditions. In case of refusal or failure to enter into said Agreement, the check or Bid Bond, as the case may be, may be forfeited to the OWNER. If the Bidder elects to furnish a Bid Bond as its Bid security, the Bidder shall use the Bid Bond form bound herein, or one conforming substantially to it in form. Bid Bonds must be accompanied by a legible Power of Attorney.

Bid Bonds shall be submitted by being scanned and uploaded to Public Purchase along with the other required Bid documents. When a Bid security check is used, it must be received by the Purchasing Division prior to the Deadline for Bids. Bid security checks will be time and date stamped by the Purchasing Division, which will establish the official time of receipt.

In addition to uploading a scanned file of the Bid Bond, the original hardcopy Bid Bond shall be submitted and received by the CBJ Contracts Office by 2:00 p.m. Alaska Time no more than seven calendar days after Bid Opening.

In lieu of the original hardcopy Bid Bond submittal requirement, bidders who have a Surety 2000 Bid Bond ID may validate their Bid Bond with Surety 2000 within the Bid Bond Response Information Form in the Public Purchase bid page.

Bid security checks shall be submitted in a sealed envelope that clearly indicates: that a bid security check is enclosed, the name of the bidding firm, and the project name and number. The envelope must not reveal the check amount so that the final Bid price will not be known until the sealed bids are opened.

Bid security checks delivered **in person** or by **courier** service must be delivered to:

PHYSICAL LOCATION:
City and Borough of Juneau, Purchasing Division
105 Municipal Way, Room 300
Juneau, AK 99801

Bid security checks delivered by **U.S. Postal Service** must be mailed to:

MAILING ADDRESS:
City and Borough of Juneau, Purchasing Division
155 South Seward Street
Juneau, AK 99801

Mailing/delivery times to Alaska may take longer than other areas of the U.S. Late bid security checks may cause a Bid to be deemed non-responsive

13.0 RETURN OF BID SECURITY. The OWNER will return all Bid security checks (certified or cashier's) accompanying such of the Bids as are not considered in making the award. All other Bid securities will be held until the Agreement has been executed. Following execution of the Agreement, all other Bid security checks will be returned to the respective Bidders whose Bids they accompanied and Bid security bonds will be appropriately discarded.

14.0 DISCREPANCIES IN BIDS. In the event there is more than one Pay Item in a Bid Schedule, the Bidder shall furnish a price for all Pay Items in the schedule, and failure to do so may render the Bid non-responsive and cause its rejection. In the event there are Unit Price Pay Items in a Bid Schedule and the "amount" indicated for a Unit Price Bid Item does not equal the product of the Unit Price and quantity, the Unit Price shall govern and the amount will be corrected accordingly, and the Bidder shall be bound by said correction. In the event there is more than one Pay Item in a Bid Schedule and the total indicated for the schedule does not agree with the sum of the prices Bid on the individual items, the prices Bid on the individual items shall govern and the total for the schedule will be corrected accordingly, and the Bidder shall be bound by said correction.

15.0 BID MODIFICATIONS AND UNAUTHORIZED ALTERNATIVE BIDS.

A. Any bidder may deliver a modification to a bid in person, by mail or fax (907-586-4561), provided that such modification is received by the Purchasing Division no later than the deadline for bids. Modifications will be time and date stamped by the Purchasing Division, which will establish the official time of receipt of the modification. The modification must not reveal the bid price but should be in the form of an addition or subtraction or other modification so that the final prices will not be known until the sealed bid is opened.

The Bid modifications shall be provided on the **Bid Modification Form** located at the end of this Section. Submittal of any other form by the vendor may deem the

modification unacceptable by the OWNER. **A mail or fax modification should not reveal the Bid price but should provide the addition or subtraction or other modification so that the final prices will not be known by the City and Borough until the sealed Bid is opened.** Submitted Modification forms shall include the modification to the unit price or lump sum amount of each pay item modified.

FAX DISCLAIMER: It is the responsibility of the bidder to submit modifications in a timely manner. Bidders' use of a fax machine to modify their bid shall be at bidders' sole risk. The Purchasing Division will attempt to keep the fax machine in good working order but will not be responsible for bid modifications that are late due to mechanical failure, a busy fax machine, or any other cause arising from bidder's use of a fax machine, even if bidder submits a transmission report or provides other confirmation indicating that the bidder transmitted a bid modification prior to the deadline. The City will not be responsible for its failure to receive the modification whether such failure is caused by equipment or human error, or otherwise. Bidders are therefore strongly encouraged to confirm receipt of their bid modification with the Purchasing Division (907-586-5215) prior to deadline.

B. Conditioned bids, limitations, or provisos attached to the Bid or bid modification will render it unauthorized and cause its rejection as being non-responsive. The completed Bid forms shall be without interlineations, alterations, or erasures in the printed text. All changes shall be initialed by the person signing the Bid. Alternative Bids will not be considered unless called for.

16.0 WITHDRAWAL OF BID. Prior to the Deadline for Bids, the Bid may be withdrawn by the Bidder by means of a written request, signed by the Bidder or its properly authorized representative. Such written request must be delivered to the place stipulated in the Notice Inviting Bids for receipt of Bids.

17.0 AWARD OF CONTRACT.

A. Award of a contract, if it is awarded, will be on the basis of materials and equipment described in the Drawings or specified in the Technical Specifications and will be made to the lowest responsive, responsible Bidder whose Bid complies with all the requirements prescribed. Unless otherwise specified, any such award will be made within the period stated in the Notice Inviting Bids that the Bids are to remain open. Unless otherwise indicated, a single award will be made for all the Bid items in an individual Bid Schedule.

B. If the OWNER has elected to advertise this Project with a Base Bid and Alternates, the OWNER may elect to award the contract for the Base Bid, or the Base Bid in combination with one or more Alternates selected by the OWNER. In either case, award shall be made to the responsive, responsible bidder offering the lowest total Bid for the WORK to be awarded.

C. Award of a contract is subject to the adoption of an appropriation of funds by the City Assembly.

18.0 EXECUTION OF AGREEMENT.

A. All Bids of value greater than $1,000,000 must be approved by the CBJ Assembly. After the CBJ Assembly has approved the award and after the Bid protest period, the OWNER will issue a Notice of Intent to Award to the approved Bidder. The Bidder to whom award

is made shall execute a written Agreement with the OWNER on the Agreement form, Section 00500, collect insurance, and shall furnish all certificates and Bonds required by the Contract Documents within 10 Days (calendar) from the date of the Notice of Intent to Award letter.

B. Failure or refusal to enter into the Agreement as herein provided or to conform to any of the stipulated requirements in connection therewith shall be just cause for annulment of the award and forfeiture of the Bid security. If the lowest responsive, responsible Bidder refuses or fails to execute the Agreement, the OWNER may award the contract to the second lowest responsive, responsible Bidder. If the second lowest responsive, responsible Bidder refuses or fails to execute the Agreement, the OWNER may award the contract to the third lowest responsive, responsible Bidder. On the failure or refusal of such second or third lowest Bidder to execute the Agreement, each such Bidder's Bid securities shall be likewise forfeited to the OWNER.

19.0 LIQUIDATED DAMAGES. Provisions for liquidated damages if any, are set forth in Section 00500 - Agreement.

20.0 FILING A PROTEST.

A. A Bidder may protest the proposed award of a competitive sealed Bid by the City and Borough of Juneau. The protest shall be executed in accordance with CBJ Ordinance 53.50.062 PROTESTS and CBJ Ordinance 53.50.080 ADMINISTRATION OF PROTEST. The entire text of the CBJ Purchasing Ordinance can be accessed at the CBJ website, *http://www.juneau.org/law/code/code.php*, or call the CBJ Purchasing Division at (907) 586-5215 for a copy of the ordinance.

B. Late protests shall not be considered by the CBJ Purchasing Officer.

21.0 CONTRACTOR'S GOOD STANDING WITH CBJ FINANCE DEPARTMENT: Contractors must be in good standing with the CBJ prior to award, and prior to any contract renewals, and in any event no later than ***seven business days*** following notification by the CBJ of intent to award. **Good standing** means: all amounts owed to the CBJ are current and the Contractor is not delinquent with respect to any taxes, fees, assessment, or other monies due and owed the CBJ, or a Confession of Judgment has been executed and the Contractor is in compliance with the terms of any stipulation associated with the Confession of Judgment, including being current as to any installment payments due; and Contractor is current in all CBJ reporting obligations (such as sales tax registration and reporting and business personal property declarations). Failure to meet these requirements may be cause for rejection of your bid. To determine if your business is in good standing, or for further information, contact the CBJ Finance Department's Sales Tax Division at (907) 586-5215 for sales tax issues, Assessor's Office at (907)586-5215 for business personal property issues, or Collections Division at (907) 586-5215 for all other accounts.

22.0 PERMITS AND LICENSES. The CONTRACTOR is responsible for all WORK associated with meeting any local, state, and/or federal permit and licensing requirements.

CITY AND BOROUGH OF JUNEAU
PURCHASING DIVISION
FAX NO. 907-586-4561

BID MODIFICATION FORM

Modification Number: _____ Modification Page ____ of ____

Note: All modifications shall be made to the original bid amount(s). If more than one Modification form is submitted by any one bidder, changes from all Modification forms submitted will be combined and applied to the original bid. Changes to the modified Bid amounts will be calculated by the OWNER. Bidder may use multiple modification pages if required.

PAY ITEM NO.	PAY ITEM DESCRIPTION	MODIFICATIONS TO UNIT PRICE (*indicate* +/-)

Bid Total Increase or Decrease: $_____

_____
Name of Bidding Firm

_____
Responsible Party Signature

_____
Printed Name (must be an authorized signatory for Bidding Firm)

END OF SECTION

SECTION 00300 - BID

BID TO: THE CITY AND BOROUGH OF JUNEAU

1. The undersigned Bidder proposes and agrees, if this Bid is accepted, to enter into an Agreement with the OWNER on the form included in the Contract Documents (as defined in Article 7 of Section 00500 - Agreement) to perform the WORK as specified or indicated in said Contract Documents entitled

Misty Lane Reconstruction
Contract No. BE22-217

2. Bidder accepts all of the terms and conditions of the Contract Documents, including without limitation those in the "Notice Inviting Bids" and "Instructions to Bidders," dealing with the disposition of the Bid Security.

3. This Bid will remain open for the period stated in the "Notice Inviting Bids" unless otherwise required by law. Bidder will enter into an Agreement within the time and in the manner required in the "Notice Inviting Bids" and the "Instructions to Bidders," and will furnish insurance certificates, Payment Bond, Performance Bond, and any other documents as may be required by the Contract Documents.

4. Bidder has familiarized itself with the nature and extent of the Contract Documents, WORK, site, locality where the WORK is to be performed, the legal requirements (federal, state and local laws, ordinances, rules, and regulations), and the conditions affecting cost, progress or performance of the WORK and has made such independent investigations as Bidder deems necessary.

5. This Bid is genuine and not made in the interest of or on behalf of any undisclosed person, firm or corporation and is not submitted in conformity with any agreement or rules of any group, association, organization or corporation; Bidder has not directly or indirectly induced or solicited any other Bidder to submit a false or sham Bid; Bidder has not solicited or induced any person, firm or corporation to refrain from bidding; and Bidder has not sought by collusion to obtain for itself any advantage over any other Bidder or over OWNER.

6. To all the foregoing, and including all Bid Schedule and information required of Bidder contained in this Bid Form, said Bidder further agrees to complete the WORK required under the Contract Documents within the Contract Time stipulated in said Contract Documents, and to accept in full payment therefore the Contract Price based on the total bid price(s) named in the aforementioned Bid Schedule.

7. Bidder has examined copies of all the Contract Documents including the following Addenda (receipt of all of which is hereby acknowledged by the Undersigned):

Addenda No.	Date Issued	Addenda No.	Date Issued

Give number and date of each Addenda above. Failure to acknowledge receipt of all Addenda may cause the Bid to be non-responsive and may cause its rejection.

8. The Bidder has read this Bid and agrees to the conditions as stated herein by signing its signature in the space provided below.

Dated: _____	Bidder: _____ (Company Name)
Alaska CONTRACTOR's Business License No: _____	By: _____ (Signature)
Alaska CONTRACTOR's License No: _____	Printed Name: _____
Telephone No: _____	Title: _____
Fax No: _____	Address: _____ (Street or P.O. Box)
E-mail: _____	_____ (City, State, Zip)

9. TO BE CONSIDERED, ALL BIDDERS MUST COMPLETE AND INCLUDE THE FOLLOWING AT THE TIME OF THE DEADLINE FOR BIDS. **MISSING DOCUMENTS WILL DEEM THIS BID NON-RESPONSIVE:**

- Bid, Section 00300 (includes Addenda receipt statement)
- Completed Bid Schedule, Section 00310, or other acceptable form of Bid Schedule as specified in Section 00030, Notice Inviting Bids
- Bid Security (Bid Bond, Section 00320, or by a certified or cashier's check as stipulated in the Notice Inviting Bids, Section 00030)
- **Contractor Financial Responsibility, Section 00370**

10. The apparent low Bidder is required to complete and submit the following documents by 4:30 p.m. on the ***fifth business day*** following the date of the Posting Notice.

- Subcontractor Report, Section 00360

The apparent low Bidder who fails to submit the completed Subcontractor Report within the time specified in Section 00360 – Subcontractor Report, may be found to be not a responsible Bidder and may be required to forfeit the Bid security. The OWNER may then consider the next lowest Bidder for award of the contract.

11. The successful Bidder will be required to submit, ***within ten Days (calendar)*** after the date of the "Notice of Intent to Award" letter, the following executed documents:

- Agreement Forms, Section 00500
- Performance Bond, Section 00610
- Payment Bond, Section 00620
- Certificates of Insurance, (CONTRACTOR) Section 00700 and Section 00800

END OF SECTION

SECTION 00310 - BID SCHEDULE

PAY ITEM NO.	PAY ITEM DESCRIPTION	PAY UNIT	APPROX. QUANTITY	UNIT PRICE		AMOUNT	
				DOLLARS	CENTS	DOLLARS	CENTS
1505.1	Mobilization	Lump Sum	All Req'd	Lump	Sum		
1570.1	Erosion and Sediment Control	Lump Sum	All Req'd	Lump	Sum		
2202.1	Excavation	CY	529				
2202.2	Sideslopes and Ditch Grading	Lump Sum	All Req'd	Lump	Sum		
2202.3	Road Cleaning and Mining Area Restoration Guarantee	Contingent Sum	All Req'd	Contingent	Sum	$5,000	
2204.1	2-Inch Minus Shot Rock w/Base Course	CY	514				
2204.2	Base Course, Grading D-1 for Driveways	TON	37				
2401.1	Locate Sanitary Sewer Services	Lump Sum	All Req'd	Lump	Sum		
2401.2	Service Connections and Laterals	EA	1				
2401.3	Sanitary Sewer Service Cleanout	EA	8				
2402.1	Adjust Sanitary Sewer Manhole to Grade	EA	2				
2404.1	Sanitary Sewer Lift Station	Lump Sum	All Req'd	Lump	Sum		
2404.2	Sanitary Sewer Bypass Pumping	Lump Sum	All Req'd	Lump	Sum		
2501.1	12-Inch CPP Pipe Culvert	LF	90				
2501.2	18-Inch CPP Pipe Culvert	LF	108				
2501.3	6-Inch Underdrain	LF	70				
2502.1	Storm Drain Manhole, Type I with Oil-Water Separator	EA	1				
2502.2	Catch Basin, Type III	EA	1				
2601.1	10-Inch HDPE Water Pipe	LF	464				
2601.2	Connect to Existing Water Pipe	EA	1				
2601.3	Temporary Water System	Lump Sum	All Req'd	Lump	Sum		
2603.1	Fire Hydrant Assembly With Access Pad	EA	1				
2605.1	Locate Water Services	Lump Sum	All Req'd	Lump	Sum		
2605.2	1-Inch Poly Water Service	EA	8				
2607.1	Pipe Insulation	Board	30				

SECTION 00310 - BID SCHEDULE

PAY ITEM NO.	PAY ITEM DESCRIPTION	PAY UNIT	APPROX. QUANTITY	UNIT PRICE		AMOUNT	
				DOLLARS	CENTS	DOLLARS	CENTS
2702.1	Construction Surveying	Lump Sum	All Req'd	Lump	Sum		
2709.1	Topsoil	CY	12				
2710.1	Seeding, Hydraulic Method, Type III	Slurry Unit	1				
2716.1	Remove and Salvage Existing Sanitary Sewer Lift Station	Lump Sum	All Req'd	Lump	Sum		
2716.2	Remove and Dispose of Existing Storm Drain System	Lump Sum	All Req'd	Lump	Sum		
2717.1	Remove and Dispose of Existing Water Pipe or Fill with Slurry	Lump Sum	All Req'd	Lump	Sum		
2719.1	Reconstruct Mailbox	EA	7				
2722.1	Relocate Electrical Conductor	LF	298				
2801.1	A.C. Pavement, Type II-A, Class B	TON	268				
2806.1	Remove Existing Asphalt Surfacing	SY	1709				
3302.1	Concrete Headwall	EA	8				
3303.1	Concrete Driveway, 6-Inchs Thick	SY	29				
3303.2	Valley Gutter, Type III	LF	176				
3304.1	Removal of Concrete Drieway Slab	SY	22				
16000.1	Sanitary Sewer Lift Station Electrical	Lump Sum	All Req'd	Lump	Sum		
16000.2	Street Lighting	Lump Sum	All Req'd	Lump	Sum		
16000.3	Electrical Demolition	Lump Sum	All Req'd	Lump	Sum		

TOTAL BID: _____

COMPANY NAME: _____

SECTION 00320 - BID BOND

KNOW ALL PERSONS BY THESE PRESENTS, that_____

_____ as Principal, and _____

as Surety, are held and firmly bound unto **THE CITY AND BOROUGH OF JUNEAU** hereinafter called "OWNER," in the sum of _____

_____dollars, (not less than five percent of the total amount of the Bid) for the payment of which sum, well and truly to be made, we bind ourselves, our heirs, executors, administrators, successors, and assigns, jointly and severally, firmly by these presents.

WHEREAS, said Principal has submitted a Bid to said OWNER to perform the WORK required under the Bid Schedule of the OWNER's Contract Documents entitled.

Misty Lane Reconstruction
Contract No. BE22-217

NOW THEREFORE, if said Principal is awarded a contract by said OWNER and, within the time and in the manner required in the "Notice Inviting Bids" and the "Instructions to Bidders" enters into a written Agreement on the form of Agreement bound with said Contract Documents, furnishes the required certificates of insurance, and furnishes the required Performance Bond and Payment Bond, then this obligation shall be null and void, otherwise it shall remain in full force and effect. In the event suit is brought upon this bond by said OWNER and OWNER prevails, said Surety shall pay all costs incurred by said OWNER in such suit, including a reasonable attorney's fee to be fixed by the court.

SIGNED AND SEALED, this _____ day of _____, 20___

(SEAL)_____ (SEAL)_____
(Principal) (Surety)

By:_____ By:_____
(Signature) (Signature)

END OF SECTION

SECTION 00360 - SUBCONTRACTOR REPORT

LIST OF SUBCONTRACTORS (AS 36.30.115)

The apparent low Bidder must submit a list of Subcontractors that the Bidder proposes to use in the performance of this contract ***on the fifth business day*** following the Posting Notice of Bids. If the fifth day falls on a weekend or holiday, the report is due by close of business on the next business Day following the weekend or holiday. The Subcontractor Report list must include each Subcontractor's name, address, location, evidence of valid Alaska Business License, and valid Alaska Contractor's Registration under AS 08.18. ***If no Subcontractors are to be utilized in the performance of the WORK, write in ink or type "NONE" on line (1) below.***

	SUBCONTRACTOR ADDRESS	[1] AK Contractor License No. [2] AK Business License No.	[1] Contact Name [2] Phone No.	Type of Work	Contract Amount	✓ if DBE
1.		[1]			$	☐
		[2]				
2.		[1]			$	☐
		[2]				
3.		[1]			$	☐
		[2]				
4.		[1]			$	☐
		[2]				

I certify that the above listed Alaska Business License(s) and CONTRACTOR Registration(s), if applicable, were valid at the time Bids were opened for this Project.

_____
CONTRACTOR, Authorized Signature

_____
CONTRACTOR, Printed Name

_____
COMPANY

SECTION 00360 - SUBCONTRACTOR REPORT

A. A Bidder may replace a listed Subcontractor if the Subcontractor:

1. fails to comply with AS 08.18;
2. files for bankruptcy or becomes insolvent;
3. fails to execute a contract with the Bidder involving performance of the WORK for which the Subcontractor was listed and the Bidder acted in good faith;
4. fails to obtain bonding;
5. fails to obtain insurance acceptable to the OWNER;
6. fails to perform the contract with the Bidder involving work for which the Subcontractor was listed;
7. must be substituted in order for the CONTRACTOR to satisfy required state and federal affirmative action requirements;
8. refuses to agree or abide with the Bidder's labor agreement; or
9. is determined by the OWNER not to be responsible.
10. is not in "Good Standing" with the OWNER as required in Article 21.0 in Section 00100 – Instructions to Bidders.

B. If a Bidder fails to list a Subcontractor or lists more than one Subcontractor for the same portion of WORK, the Bidder shall be considered to have agreed to perform that portion of WORK without the use of a Subcontractor and to have represented the Bidder to be qualified to perform that WORK.

C. A Bidder who attempts to circumvent the requirements of this section by listing as a Subcontractor another contractor who, in turn, sublets the majority of the WORK required under the contract violates this section.

D. If a contract is awarded to a Bidder who violates this section, the OWNER may:

1. cancel the contract; or
2. after notice and a hearing, assess a penalty on the Bidder in an amount that does not exceed 10 percent of the value of the subcontract at issue.

E. On the Subcontractor Report, the apparent low Bidder must list all Subcontractors anticipated to perform WORK on the project.

F. An apparent low Bidder who fails to submit a completed Subcontractor Report within the time specified in this section may be found to be not a responsible Bidder and may be required to forfeit the Bid security. The OWNER will then consider the next lowest Bidder for award of the contract.

END OF SECTION

SECTION 00370 - CONTRACTOR'S FINANCIAL RESPONSIBILITY

To be considered, all bidders must complete and include this form ***at the time of the deadline for bids***. Attach additional sheets as necessary to respond to questions.

PROJECT: BE22-217 MISTY LANE RECONSTRUCTION

As the General Contractor on this project, I intend to subcontract _____% of the total value of this contract.

A. EXPERIENCE

1. Have you ever failed to complete a contract due to insufficient resources?
[ ] No [ ] Yes If YES, explain:

_____
_____
_____
_____

2. Describe arrangements you have made to finance this work:

_____
_____
_____
_____

3. Have you had previous construction contracts or subcontracts with the City and Borough of Juneau?
[ ] Yes [ ] No

4. Describe your most recent or current contract, its completion date, and scope of work:

_____
_____
_____
_____
_____
_____

5. List below, and/or as an attachment to this questionnaire, other construction projects you have completed, dates of completion, scope of work, and total contract amount for each project completed in the past twelve months.

_____
_____
_____
_____
_____

6. Per Alaska Statute 36.90.210, on previously awarded public contracts (including contracts still in progress), have you ever failed to pay a subcontractor **or** material supplier **within eight working days** after receiving payment from the Owner (for projects occurring within the last 3 years)?

[ ] Yes [ ] No If yes, please attach a detailed explanation for **each** occurrence.

B. EQUIPMENT

1. Describe below, and/or as an attachment, the equipment you have available and intend to use for this project.

ITEM	QUANTITY	MAKE	MODEL	SIZE/CAPACITY	PRESENT MARKET VALUE

2. Do you propose to purchase any equipment for use on this project not listed on table B-1?

[ ] No [ ] Yes If YES, describe type, quantity, and approximate cost:

_____
_____
_____
_____

3. Do you propose to rent any equipment for this work not listed on table B-1?

[ ] No [ ] Yes If YES, describe type and quantity:

_____
_____
_____
_____
_____
_____

4. Is your bid based on firm offers for all materials necessary for this project?
[ ] Yes [ ] No If NO, please explain:

_____
_____
_____
_____
_____
_____

I hereby certify that the above statements are true and complete.

_____ _____
Signature Company Name

_____ _____
Printed Name Date

SECTION 00500 - AGREEMENT

THIS AGREEMENT is between THE CITY AND BOROUGH OF JUNEAU (hereinafter called OWNER) and _____ (hereinafter called CONTRACTOR) OWNER and CONTRACTOR, in consideration of the mutual covenants hereinafter set forth, agree as follows:

ARTICLE 1. WORK.

CONTRACTOR shall complete the WORK as specified or as indicated under the Bid Schedule of the OWNER's Bid Documents entitled **Contract No. BE22-217 Misty Lane Reconstruction.**

The WORK covered in the Contract Documents generally includes: reconstruction of Misty Lane from Horizon Drive through the cul-de-sac. WORK will include the replacement of the water main and services, replacement of existing sanitary sewer lift station, replacement of one sanitary sewer service, installation of sewer service cleanouts, and installation of new storm drain system, 2" minus shot rock with D-1 base course, asphalt pavement and other miscellaneous WORK.

The WORK to be paid under this contract shall include the following: Total Bid as shown in Section 00310 - Bid Schedule.

ARTICLE 2. CONTRACT COMPLETION TIME.

The WORK must be completed by September 15, 2022, or 75 days from commencement of work, whichever occurs first.

ARTICLE 3. DATE OF AGREEMENT

The date of this Agreement will be the date of the last signature on page three of this section.

ARTICLE 4. LIQUIDATED DAMAGES.

OWNER and the CONTRACTOR recognize that time is of the essence of this Agreement and that the OWNER will suffer financial loss if the WORK is not completed within the time specified in Article 2 herein, plus any extensions thereof allowed in accordance with Article 12 of the General Conditions. They also recognize the delays, expense, and difficulties involved in proving in a legal proceeding the actual damages suffered by the OWNER if the WORK is not completed on time. Accordingly, instead of requiring any such proof, the OWNER and the CONTRACTOR agree that as liquidated damages for delay (but not as a penalty) the CONTRACTOR shall pay the OWNER **$700** for each Day that expires after the completion time specified in Article 2 herein. The amount of liquidated damages specified above is agreed to be a reasonable estimate based on all facts known as of the date of this Agreement.

ARTICLE 5. CONTRACT PRICE.

OWNER shall pay CONTRACTOR for completion of the WORK in accordance with the Contract Documents in the amount set forth in the Bid Schedule. The CONTRACTOR agrees to accept as full and complete payment for all WORK to be done in this contract for: **Contract No. BE22-217 Misty Lane Reconstruction**, those Unit Price amounts as set forth in the Bid Schedule in the Contract Documents for this Project.

The total amount of this contract shall be _____ ($ _____), except as adjusted in accordance with the provisions of the Bid Documents.

ARTICLE 6. PAYMENT PROCEDURES.

CONTRACTOR shall submit Applications for Payment in accordance with Article 14 of the General Conditions. Applications for Payment will be processed by the ENGINEER as provided in the General Conditions.

Progress payments will be paid in full in accordance with Article 14 of the General Conditions until ninety (90) percent of the Contract Price has been paid. The remaining ten (10) percent of the Contract Price may be retained, in accordance with applicable Alaska State Statutes, until final inspection, completion, and acceptance of the Project by the OWNER.

ARTICLE 7. CONTRACT DOCUMENTS.

The Contract Documents which comprise the entire Agreement between OWNER and CONTRACTOR concerning the WORK consist of this Agreement (pages 00500-1 to 00500-6, inclusive) and the following sections of the Contract Documents:

- Table of Contents (pages 00005-1, inclusive)
- Notice Inviting Bids (pages 00030-1 to 00030-2, inclusive).
- Instructions to Bidders (pages 00100-1 to 00100-9, inclusive).
- Bid (pages 00300-1 to 00300-2, inclusive).
- Bid Schedule (pages 00310-1 to 00310-2, inclusive).
- Bid Bond (page 00320-1, inclusive) or Bid Security.
- Subcontractor Report (pages 00360-1 to 00360-2, inclusive).
- Contractor Financial Responsibility (pages 00370-1 to 00370-3, inclusive).
- Performance Bond (pages 00610-1 to 00610-2, inclusive).
- Payment Bond (pages 00620-1 to 00620-2, inclusive).
- Insurance Certificate(s).
- General Conditions (pages 00700-1 to 00700-48, inclusive).
- Supplementary General Conditions (pages 00800-1 to 00800-8, inclusive).
- Alaska Labor Standards, Reporting, and Prevailing Wage Determination (page 00830-1).
- Permits, (page 00852-1).
- Standard Details, (page 00853-1, inclusive)
- Special Provisions (pages 1to 125 inclusive)
- Drawings consisting of 24 sheets, as listed in the Table of Contents.
- Addenda numbers _____ to ____, inclusive.
- Change Orders which may be delivered or issued after the Date of the Agreement and which are not attached hereto.

There are no Contract Documents other than those listed in this Article 7. The Contract Documents may only be amended by Change Order as provided in Paragraph 3.3 of the General Conditions.

ARTICLE 8. MISCELLANEOUS.

Terms used in this Agreement which are defined in Article 1 of the General Conditions will have the meanings indicated in the General Conditions.

ARTICLE 8. MISCELLANEOUS. (Cont'd.)

No assignment by a party hereto of any rights under or interests in the Contract Documents will be binding on another party hereto without the written consent of the party sought to be bound; and specifically but without limitation monies that may become due and monies that are due may not be assigned without such consent (except to the extent that the effect of this restriction may be limited by law), and unless specifically stated to the contrary in any written consent to an assignment, no assignment will release or discharge the assignor from any duty or responsibility under the Contract Documents.

OWNER and CONTRACTOR each binds itself, its partners, successors, assigns and legal representatives to the other party hereto, its partners, successors, assigns and legal representatives in respect of all covenants, agreements and obligations contained in the Contract Documents. This Agreement shall be governed by the laws of the State of Alaska. Jurisdiction shall be in the State of Alaska, First Judicial District.

IN WITNESS WHEREOF, OWNER and CONTRACTOR have caused this Agreement to be executed on the date listed below by OWNER.

OWNER:

City and Borough of Juneau

(Signature)

By: Duncan Rorie Watt, City & Borough Manager
(Printed Name)

Date: _____

OWNER's address for giving notices:

155 South Seward Street

Juneau, Alaska 99801

907-586-0800 907-586-4530
(Telephone) (Fax)

CONTRACTOR:

_____
(Company Name)

_____
(Signature)

By: _____
(Printed Name, Authority or Title)

CONTRACTOR Signature Date: _____

CONTRACTOR's address for giving notices:

_____

_____

_____
(Telephone) (Fax)

_____
(E-mail address)

Contractor License No. _____

CERTIFICATE
(if Corporation)

STATE OF)
) SS:
COUNTY OF)

I HEREBY CERTIFY that a meeting of the Board of Directors of the

_____a corporation existing under the laws of

the State of_____, held on _____, 20____, the following resolution was duly passed and adopted:

> "RESOLVED, that _____, as _____ President of the Corporation, be and is hereby authorized to **execute the Agreement** with the CITY AND BOROUGH OF JUNEAU and this corporation and that the execution thereof, attested by the Secretary of the Corporation, and with the Corporate Seal affixed, shall be the official act and deed of this Corporation."
>
> I further certify that said resolution is now in full force and effect.
>
> IN WITNESS WHEREOF, I have hereunto set my hand and affixed the official seal of the

corporation this _____ day of _____, 20____.

_____
Secretary

(SEAL)

CERTIFICATE
(if Partnership)

STATE OF)
) SS:
COUNTY OF)

I HEREBY CERTIFY that a meeting of the Partners of the

_____ a partnership existing under the laws of the State

of _____, held on _____, 20___, the following resolution was duly passed and adopted:

"RESOLVED, that _____, as _____ of the Partnership, be and is hereby authorized to **execute the Agreement** with the CITY AND BOROUGH OF JUNEAU and this partnership and that the execution thereof, attested by the _____shall be the official act and deed of this Partnership."

I further certify that said resolution is now in full force and effect.

IN WITNESS WHEREOF, I have hereunto set my hand this _____, day of _____, 20_____.

_____
Secretary

(SEAL)

CERTIFICATE
(if Joint Venture)

STATE OF)
) SS:
COUNTY OF)

I HEREBY CERTIFY that a meeting of the Principals of the

_____ a joint venture existing under the laws of the

State of _____, held on _____, 20___, the following resolution was duly passed and adopted:

"RESOLVED, that _____, as _____ of the Joint Venture, be and is hereby authorized to **execute the Agreement** with the CITY AND BOROUGH OF JUNEAU and this joint venture and that the execution thereof, attested by the _____ shall be the official act and deed of this Joint Venture."

I further certify that said resolution is now in full force and effect.

IN WITNESS WHEREOF, I have hereunto set my hand this _____, day of _____, 20___.

_____
Secretary

(SEAL)

END OF SECTION

SECTION 00610 - PERFORMANCE BOND

KNOW ALL PERSONS BY THESE PRESENTS: That we _____
(Name of Contractor)
_____ a _____
(Corporation, Partnership, Individual)

hereinafter called "Principal" and _____
(Surety)
of _____, State of _____hereinafter called the "Surety," are held and firmly bound to the CITY AND BOROUGH of JUNEAU, ALASKA hereinafter called "OWNER,"
(Owner) (City and State)
for the penal sum of _____

_____dollars ($_____) in lawful money of the United States, for the payment of which sum well and truly to be made, we bind ourselves, our heirs, executors, administrators and successors, jointly and severally, firmly by these presents.

THE CONDITION OF THIS OBLIGATION is such that whereas, the CONTRACTOR has entered into a certain contract with the OWNER, the effective date of which is (CBJ Contracts Office to fill in effective date) _____, a copy of which is hereto attached and made a part hereof for the construction of:

Misty Lane Reconstruction
CBJ Contract No. BE22-217

NOW, THEREFORE, if the Principal shall truly and faithfully perform its duties, all the undertakings, covenants, terms, conditions, and agreements of said contract during the original term thereof, and any extensions thereof, which may be granted by the OWNER, with or without notice to the Surety, and if it shall satisfy all claims and demands incurred under such contract, and shall fully indemnify and save harmless the OWNER from all costs and damages which it may suffer by reason of failure to do so, and shall reimburse and repay the OWNER all outlay and expense which the OWNER may incur in making good any default, then this obligation shall be void; otherwise to remain in full force and effect.

PROVIDED, FURTHER, that the said Surety, for value received hereby stipulates and agrees that no change, extension of time, alteration or addition to the terms of the contract or to the WORK to be performed thereunder or the specifications accompanying the same shall in any wise affect its obligation on this bond, and it does hereby waive notice of any such change, extension of time, alteration or addition to the terms of the contract or to the WORK or to the Specifications.

PROVIDED, FURTHER, that no final settlement between the OWNER and the Principal shall abridge the right of any beneficiary hereunder, whose claim may be unsatisfied.

SECTION 00610 - PERFORMANCE BOND

Misty Lane Reconstruction
CBJ Contract No. BE22-217

IN WITNESS WHEREOF, this instrument is issued in two (2) identical counterparts, each one of which shall be deemed an original.

CONTRACTOR:

By:_____
(Signature)

_____
(Printed Name)

_____
(Company Name)

_____
(Mailing Address)

_____
(City, State, Zip Code)

SURETY:

By: _____ Date Issued:_____
(Signature of Attorney-in-Fact)

_____
(Printed Name)

_____
(Company Name)

_____
(Mailing Address)

_____
(City, State, Zip Code)

(Affix SURETY'S SEAL)

NOTE: If CONTRACTOR is Partnership, all Partners must execute bond.

END OF SECTION

SECTION 00620 - PAYMENT BOND

KNOW ALL PERSONS BY THESE PRESENTS: That we _____
(Name of Contractor)
_____ a _____
(Corporation, Partnership, Individual)

hereinafter called "Principal" and _____
(Surety)
of _____, State of _____hereinafter called the "Surety," are held and firmly bound to the CITY AND BOROUGH of JUNEAU, ALASKA hereinafter called "OWNER,"
(Owner) (City and State)
for the penal sum of _____

_____dollars ($_____) in lawful money of the United States, for the payment of which sum well and truly to be made, we bind ourselves, our heirs, executors, administrators and successors, jointly and severally, firmly by these presents.

THE CONDITION OF THIS OBLIGATION is such that whereas, the CONTRACTOR has entered into a certain contract with the OWNER, the effective date of which is (CBJ Contracts Office to fill in effective date) _____, a copy of which is hereto attached and made a part hereof for the construction of:

Misty Lane Reconstruction
CBJ Contract No. BE22-217

NOW, THEREFORE, if the Principal shall promptly make payment to all persons, firms, Subcontractors, and corporations furnishing materials for, or performing labor in the prosecution of the WORK provided for in such contract, and any authorized extension or modification thereof, including all amounts due for materials, lubricants, oil, gasoline, coal and coke, repairs on machinery, equipment and tools, consumed or used in connection with the construction of such WORK, and all insurance premiums on said work, and for all labor performed in such WORK, whether by Subcontractor or otherwise, then this obligation shall be void; otherwise to remain in full force and effect.

PROVIDED, FURTHER, that the said Surety, for value received hereby stipulates and agrees that no change, extension of time, alteration or addition to the terms of the contract or to the work to be performed thereunder or the specifications accompanying the same shall in any wise affect its obligation on this bond, and it does hereby waive notice of any such change, extension of time, alteration or addition to the terms of the contract or to the WORK or to the Specifications.

PROVIDED, FURTHER, that no final settlement between the OWNER and the Principal shall abridge the right of any beneficiary hereunder, whose claim may be unsatisfied.

Misty Lane Reconstruction
CBJ Contract No. BE22-217

IN WITNESS WHEREOF, this instrument is issued in two (2) identical counterparts, each one of which shall be deemed an original.

CONTRACTOR:

By:_____
(Signature)

_____
(Printed Name)

_____
(Company Name)

_____
(Mailing Address)

_____
(City, State, Zip Code)

SURETY:

By: _____ Date Issued:_____
(Signature of Attorney-in-Fact)

_____
(Printed Name)

_____
(Company Name)

_____
(Mailing Address)

_____
(City, State, Zip Code)

(Affix SURETY'S SEAL)

NOTE: If CONTRACTOR is Partnership, <u>all</u> Partners must execute bond.

END OF SECTION

SECTION 00700 - GENERAL CONDITIONS

TABLE OF CONTENTS
(Revised 03-2003)

ARTICLE 1 DEFINITIONS 00700-5

ARTICLE 2 PRELIMINARY MATTERS

2.1 Delivery of Bonds/Insurance Certificates 00700-9
2.2 Copies of Documents 00700-9
2.3 Commencement of Contract Time; Notice to Proceed 00700-9
2.4 Starting the WORK 00700-9
2.5 Pre-construction Conference 00700-9
2.6 Finalizing CONTRACTOR Submittals 00700-9

ARTICLE 3 CONTRACT DOCUMENTS: INTENT, AMENDING, REUSE

3.1 Intent 00700-10
3.2 Order of Precedence of Contract Documents 00700-10
3.3 Amending and Supplementing Contract Documents 00700-11
3.4 Reuse of Documents 00700-11

ARTICLE 4 AVAILABILITY OF LANDS; PHYSICAL CONDITIONS; REFERENCE POINTS

4.1 Availability of Lands 00700-11
4.2 Physical Conditions - Subsurface and Existing Structures 00700-11
4.3 Differing Site Conditions 00700-12
4.4 Physical Conditions - Underground Utilities 00700-12
4.5 Reference Points 00700-13
4.6 Use of the CBJ/State Lemon Creek Gravel Pit 00700-13

ARTICLE 5 BONDS AND INSURANCE

5.1 Performance, Payment and Other Bonds 00700-14
5.2 Insurance 00700-15

ARTICLE 6 CONTRACTOR'S RESPONSIBILITIES

6.1 Supervision and Superintendence 00700-17
6.2 Labor, Materials, and Equipment 00700-17
6.3 Adjusting Progress Schedule 00700-18
6.4 Substitutes or "Or Equal" Items 00700-19
6.5 Concerning Subcontractors, Suppliers and Others 00700-19
6.6 Permits 00700-19
6.7 Patent Fees and Royalties 00700-20
6.8 Laws and Regulations 00700-20

ARTICLE 6 CONTRACTOR'S RESPONSIBILITIES (Cont'd.)

6.9 Taxes 00700-20
6.10 Use of Premises 00700-20
6.11 Safety and Protection 00700-21
6.12 Shop Drawings and Samples 00700-22
6.13 Continuing the WORK 00700-22
6.14 Indemnification 00700-22
6.15 Contractor's Daily Reports 00700-23
6.16 Assignment of Contract 00700-23
6.17 Contractor's Responsibility for Utility Property and Services 00700-23
6.18 Operating Water System Valves 00700-24
6.19 CONTRACTOR's WORK Schedule Limitations 00700-24

ARTICLE 7 OTHER WORK

7.1 Related WORK at Site 00700-24
7.2 Coordination 00700-25

ARTICLE 8 OWNER'S RESPONSIBILITIES

8.1 Communications 00700-25
8.2 Payments 00700-25
8.3 Lands, Easements, and Surveys 00700-25
8.4 Change Orders 00700-25
8.5 Inspections and Tests 00700-25
8.6 Suspension of WORK 00700-25
8.7 Termination of Agreement 00700-25

ARTICLE 9 ENGINEER'S STATUS DURING CONSTRUCTION

9.1 OWNER 's Representative 00700-25
9.2 Visits to Site 00700-25
9.3 Project Representation 00700-26
9.4 Clarifications and Interpretations 00700-28
9.5 Authorized Variations in WORK 00700-28
9.6 Rejecting Defective WORK 00700-28
9.7 CONTRACTOR Submittals, Change Orders, and Payments 00700-28
9.8 Decisions on Disputes 00700-28
9.9 Limitation on Engineer's Responsibilities 00700-29

SECTION 00700 - GENERAL CONDITIONS

ARTICLE 10 CHANGES IN THE WORK

10.1 General 00700-30
10.2 Allowable Quantity Variations 00700-30

ARTICLE 11 CHANGE OF CONTRACT PRICE

11.1 General 00700-31
11.2 Costs Relating to Weather 00700-31
11.3 Cost of WORK (Based on Time and Materials) 00700-32
11.4 CONTRACTOR's Fee 00700-34
11.5 Excluded Costs 00700-35

ARTICLE 12 CHANGE OF CONTRACT TIME

12.1 General 00700-36
12.2 Extensions of Time for Delay Due to Weather 00700-36

ARTICLE 13 WARRANTY AND GUARANTEE; TESTS AND INSPECTIONS; CORRECTION, REMOVAL, OR ACCEPTANCE OF DEFECTIVE WORK

13.1 Warranty and Guarantee 00700-37
13.2 Access to WORK 00700-37
13.3 Tests and Inspections 00700-37
13.4 OWNER May Stop the WORK 00700-38
13.5 Correction or Removal of Defective WORK 00700-38
13.6 One Year Correction Period 00700-39
13.7 Acceptance of Defective WORK 00700-39

ARTICLE 14 PAYMENTS TO CONTRACTOR AND COMPLETION

14.1 Schedule of Values (Lump Sum Price Breakdown) 00700-39
14.2 Unit Price Bid Schedule 00700-39
14.3 Application for Progress Payment 00700-39
14.4 CONTRACTOR's Warranty of Title 00700-40
14.5 Review of Applications for Progress Payment 00700-40
14.6 Partial Utilization 00700-41
14.7 Substantial Completion 00700-41
14.8 Final Application for Payment 00700-41
14.9 Final Payment and Acceptance 00700-42
14.10 Release of Retainage and Other Deductions 00700-42
14.11 CONTRACTOR's Continuing Obligation 00700-42
14.12 Final Payment Terminates Liability of OWNER 00700-43

ARTICLE 15 SUSPENSION OF WORK AND TERMINATION

15.1 Suspension of WORK by OWNER 00700-43
15.2 Termination of Agreement by OWNER (CONTRACTOR Default) 00700-43
15.3 Termination of Agreement by OWNER (For Convenience) 00700-43
15.4 Termination of Agreement by CONTRACTOR 00700-44

ARTICLE 16 MISCELLANEOUS

16.1 Giving Notice 00700-44
16.2 Rights In and Use of Materials Found on the WORK 00700-44
16.3 Right to Audit 00700-45
16.4 Archaeological or Historical Discoveries 00700-45
16.5 Construction Over or Adjacent to Navigable Waters 00700-45
16.6 Gratuity and Conflict of Interest 00700-45
16.7 Suits of Law Concerning the WORK 00700-46
16.8 Certified Payrolls 00700-46
16.9 Prevailing Wage Rates 00700-46
16.10 Employment Reference 00700-47
16.11 Cost Reduction Incentive 00700-47

ARTICLE 1 DEFINITIONS

Wherever used in these General Conditions or in the Contract Documents the following terms have the meanings indicated which are applicable to both the singular and plural thereof. Where an entire word is capitalized in the definitions and is found not capitalized in the Contract Documents it has the ordinary dictionary definition.

Addenda - Written or graphic instruments issued prior to the opening of Bids which make additions, deletions, or revisions to the Contract Documents.

Agreement - The written contract between the OWNER and the CONTRACTOR covering the WORK to be performed; other documents are attached to the Agreement and made a part thereof as provided therein.

Application for Payment - The form furnished by the ENGINEER which is to be used by the CONTRACTOR to request progress or final payment and which is to be accompanied by such supporting documentation as is required by the Contract Documents.

Asbestos - Any material that contains more than one percent asbestos and is friable or is releasing asbestos fibers into the air above current action levels established by the United States Occupational Safety and Health Administration.

Bid - The offer or proposal of the Bidder submitted on the prescribed form setting forth the price or prices for the WORK.

Bonds - Bid, Performance, and Payment Bonds and other instruments which protect against loss due to inability or refusal of the CONTRACTOR to perform its contract.

CBJ Project Manager - The authorized representative of the City and Borough of Juneau Engineering Department, as OWNER, who is responsible for administration of the contract.

Change Order - A document recommended by the ENGINEER, which is signed by the CONTRACTOR and the OWNER and authorizes an addition, deletion, or revision in the WORK, or an adjustment in the Contract Price or the Contract Time, issued on or after the Effective Date of the Agreement.

Contract Documents - The Table of Contents, Notice Inviting Bids, Instructions to Bidders, Bid Forms (including the Bid, Bid Schedule(s), Information Required of Bidder, Bid Bond, and all required certificates and affidavits), Agreement, Performance Bond, Payment Bond, General Conditions, Supplementary General Conditions, Technical Specifications, Drawings, Permits, and all Addenda, and Change Orders executed pursuant to the provisions of the Contract Documents.

Contract Price - The total monies payable by the OWNER to the CONTRACTOR under the terms and conditions of the Contract Documents.

Contract Time - The number of successive calendar Days stated in the Contract Documents for the completion of the WORK.

CONTRACTOR - The individual, partnership, corporation, joint-venture or other legal entity with whom the OWNER has executed the Agreement.

Day - A calendar day of 24 hours measured from midnight to the next midnight.

Defective WORK - WORK that is unsatisfactory, faulty, or deficient; or that does not conform to the Contract Documents; or that does not meet the requirements of any inspection, reference standard, test, or approval referred to in the Contract Documents; or WORK that has been damaged prior to the ENGINEER's recommendation of final payment.

Drawings - The Drawings, plans, maps, profiles, diagrams, and other graphic representations which indicate the character, location, nature, extent, and scope of the WORK and which have been prepared by the ENGINEER and are referred to in the Contract Documents. Shop Drawings are not within the meaning of this paragraph.

Effective Date of the Agreement - The date indicated in the Agreement on which it becomes effective, but if no such date is indicated it means the date on which the Agreement is signed and delivered by the last of the two parties to sign and deliver.

Engineer of Record - The individual, partnership, corporation, joint-venture or other legal entity named as such in the Contract Documents.

ENGINEER - The ENGINEER is the firm or person(s) selected by the City and Borough of Juneau (CBJ) to perform the duties of project inspection and management. CBJ will inform the CONTRACTOR of the identity of the ENGINEER at or before the Notice to Proceed.

Field Order - A written order issued by the ENGINEER which may or may not involve a change in the WORK.

General Requirements - Division 1 of the Technical Specifications.

Hazardous Waste - The term Hazardous Waste shall have the meaning provided in Section 1004 of the Solid Waste Disposal Act (42 USC Section 9603) as amended from time to time.

Holidays - The CBJ legal holidays occur on:

1. New Year's Day - January 1
2. Martin Luther King's Birthday - Third Monday in January
3. President's Day - Third Monday in February
4. Seward's Day - Last Monday in March
5. Memorial Day - Last Monday in May
6. Independence Day - July 4
7. Labor Day - First Monday in September
8. Alaska Day - October 18
9. Veteran's Day - November 11
10. Thanksgiving Day - Fourth Thursday and the following Friday in November
11. Christmas Day – December 25

If any holiday listed above falls on a Saturday, Saturday and the preceding Friday are both legal holidays. If the holiday should fall on a Sunday, Sunday and the following Monday are both legal holidays.

Inspector - The authorized representative of the ENGINEER assigned to make detailed inspections for conformance to the Contract Documents. Any reference to the Resident Project Representative in this document shall mean the Inspector.

Laws and Regulations; Laws or Regulations - Any and all applicable laws, rules, regulations, ordinances, codes, and/or orders of any and all governmental bodies, agencies, authorities and courts having jurisdiction.

Mechanic's Lien - A form of security, an interest in real property, which is held to secure the payment of an obligation. When referred to in these Contract Documents, "Mechanic's Lien" or "lien" means "Stop Notice".

Milestone - A principal event specified in the Contract Documents relating to an intermediate completion date of a portion of the WORK, or a period of time within which the portion of the WORK should be performed prior to Substantial Completion of all the WORK.

Notice of Award - The written notice by the OWNER to the apparent successful bidder stating that the apparent successful bidder has complied with all conditions for award of the contract.

Notice of Completion - A form signed by the ENGINEER and the CONTRACTOR recommending to the OWNER that the WORK is Substantially Complete and fixing the date of Substantial Completion. After acceptance of the WORK by the OWNER's governing body, the form is signed by the OWNER and filed with the County Recorder. This filing starts the 30-day lien filing period on the WORK.

Notice to Proceed - The written notice issued by the OWNER to the CONTRACTOR authorizing the CONTRACTOR to proceed with the WORK and establishing the date of commencement of the Contract Time.

Notice of Intent to Award - The written notice by the OWNER to the apparent successful bidder stating that upon compliance by the apparent successful bidder with the requirements listed therein, within the time specified, the OWNER will enter into an Agreement.

OWNER - The City and Borough of Juneau (CBJ), acting through its legally designated officials, officers, or employees.

Partial Utilization - Use by the OWNER or a substantially completed part of the WORK for the purpose for which it is intended prior to Substantial Completion of all the WORK.

PCB's - Polychlorinated biphenyls.

PERMITTEE – See definition for CONTRACTOR.

Petroleum - Petroleum, including crude oil or any fraction thereof which is liquid at standard conditions of temperature and pressure (60 degrees Fahrenheit and 14.7 pounds per square inch absolute), such as oil, petroleum, fuel oil, oil sludge, oil refuse, gasoline, kerosene, and oil mixed with other non-Hazardous Wastes and crude oils.

Project - The total construction of which the WORK to be provided under the Contract Documents may be the whole, or a part as indicated elsewhere in the Contract Documents.

Radioactive Material - Source, special nuclear, or byproduct material as defined by the Atomic Energy Act of 1954 (42 USC Section 2011 et seq.) as amended from time to time.

Shop Drawings - All Drawings, diagrams, illustrations, schedules and other data which are specifically prepared by or for the CONTRACTOR and submitted by the CONTRACTOR, to the ENGINEER, to illustrate some portion of WORK.

Specifications - Same definition as "Technical Specifications" hereinafter.

Stop Notice - A legal remedy for Subcontractors and suppliers who contribute to public works, but who are not paid for their WORK, which secures payment from construction funds possessed by the OWNER. For public property, the Stop Notice remedy is designed to substitute for mechanic's lien rights.

Sub-Consultant - The individual, partnership, corporation, joint-venture or other legal entity having a direct contract with ENGINEER, or with any of its Consultants to furnish services with respect to the Project.

Subcontractor - An individual, partnership, corporation, joint-venture or other legal entity having a direct contract with the CONTRACTOR, or with any of its Subcontractors, for the performance of a part of the WORK at the site.

Substantial Completion - Refers to when the WORK has progressed to the point where, in the opinion of the ENGINEER as evidenced by Notice of Completion as applicable, it is sufficiently complete, in accordance with the Contract Documents, so that the WORK can be utilized for the purposes for which it is intended; or if no such notice is issued, when final payment is due in accordance with Paragraph 14.8. The terms "substantially complete" and "substantially completed" as applied to any WORK refer to substantial completion thereof.

Supplementary General Conditions (SGC) - The part of the Contract Documents which make additions, deletions, or revisions to these General Conditions.

Supplier - A manufacturer, fabricator, supplier, distributor, materialman, or vendor.

Technical Specifications - Divisions 1 through 16 of the Contract Documents consisting of the General Requirements and written technical descriptions of products and execution of the WORK.

Underground Utilities - All pipelines, conduits, ducts, cables, wires, manholes, vaults, tanks, tunnels, or other such facilities or attachments, and any encasements containing such facilities which have been installed underground to furnish any of the following services or materials: water, sewage and drainage removal, electricity, gases, steam, liquid petroleum products, telephone or other communications, cable television, traffic, or other control systems.

WORK, Work - The entire completed construction or the various separately identifiable parts thereof required to be furnished under the Contract Documents. WORK is the result of performing, or furnishing labor and furnishing and incorporating materials and equipment into the construction, and performing or furnishing services and furnishing documents, all as required by the Contract Documents.

ARTICLE 2 PRELIMINARY MATTERS

2.1 DELIVERY OF BONDS/INSURANCE CERTIFICATES. When the CONTRACTOR delivers the signed Agreements to the OWNER, the CONTRACTOR shall also deliver to the OWNER such Bonds and Insurance Policies and Certificates as the CONTRACTOR may be required to furnish in accordance with the Contract Documents.

2.2 COPIES OF DOCUMENTS. The OWNER shall furnish to the CONTRACTOR the required number of copies of the Contract Documents specified in the Supplementary General Conditions.

2.3 COMMENCEMENT OF CONTRACT TIME; NOTICE TO PROCEED. The Contract Time will start to run on the commencement date stated in the Notice to Proceed.

2.4 STARTING THE WORK

A. The CONTRACTOR shall begin to perform the WORK within 10 days after the commencement date stated in the Notice to Proceed, but no WORK shall be done at the site prior to said commencement date.

B. Before undertaking each part of the WORK, the CONTRACTOR shall carefully study and compare the Contract Documents and check and verify pertinent figures shown thereon and all applicable field measurements. The CONTRACTOR shall promptly report in writing to the ENGINEER any conflict, error, or discrepancy which the CONTRACTOR may discover and shall obtain a written interpretation or clarification from the ENGINEER before proceeding with any WORK affected thereby.

C. The CONTRACTOR shall submit to the ENGINEER for review those documents called for under Section 01300 - CONTRACTOR Submittals in the General Requirements.

2.5 PRE-CONSTRUCTION CONFERENCE. The CONTRACTOR is required to attend a Pre-Construction Conference. This conference will be attended by the ENGINEER and others as appropriate in order to discuss the WORK in accordance with the applicable procedures specified in the General Requirements, Section 01010 - Summary of WORK in the General Requirements.

2.6 FINALIZING CONTRACTOR SUBMITTALS. At least 7 days before submittal of the first Application for Payment a conference attended by the CONTRACTOR, the ENGINEER and others as appropriate will be held to finalize the initial CONTRACTOR submittals in accordance with the General Requirements. As a minimum the CONTRACTOR's representatives should include the project manager and schedule expert. The CONTRACTOR should plan on this meeting taking no less than 8 hours. If the submittals are not finalized at the end of the meeting, additional meetings will be held so that the submittals can be finalized prior to the submittal of the first application for payment. No application for payment will be processed until CONTRACTOR submittals are finalized.

ARTICLE 3 CONTRACT DOCUMENTS: INTENT, AMENDING, REUSE

3.1 INTENT

A. The Contract Documents comprise the entire Agreement between the OWNER and the CONTRACTOR concerning the WORK. The Contract Documents shall be construed as a whole in accordance with Alaska Law.

B. It is the intent of the Contract Documents to describe the WORK, functionally complete, to be constructed in accordance with the Contract Documents. Any work, materials, or equipment that may reasonably be inferred from the Contract Documents as being required to produce the intended result shall be supplied whether or not specifically called for. When words or phrases which have a well-known technical or construction industry or trade meaning are used to describe work, materials, or equipment such words or phrases shall be interpreted in accordance with that meaning, unless a definition has been provided in Article 1 of the General Conditions. Reference to standard specifications, manuals, or codes of any technical society, organization, or association, or to the Laws or Regulations of any governmental authority, whether such reference be specific or by implication, shall mean the latest standard specification, manual, code, or Laws or Regulations in effect at the time of opening of Bids, except as may be otherwise specifically stated. However, no provision of any referenced standard specification, manual, or code (whether or not specifically incorporated by reference in the Contract Documents) shall be effective to change the duties and responsibilities of the OWNER, the CONTRACTOR, or the ENGINEER or any of their consultants, agents, or employees from those set forth in the Contract Documents.

C. If, during the performance of the WORK, CONTRACTOR discovers any conflict, error, ambiguity or discrepancy within the Contract Documents or between the Contract Documents and any provision of any such Law or Regulation applicable to the performance of the WORK or of any such standard, specification, manual or code or of any instruction of any Supplier referred to in paragraph 6.5, the CONTRACTOR shall report it to the ENGINEER in writing at once, and the CONTRACTOR shall not proceed with the WORK affected thereby (except in an emergency as authorized by the ENGINEER) until a clarification field order, or Change Order to the Contract Documents has been issued.

3.2 ORDER OF PRECEDENCE OF CONTRACT DOCUMENTS

A. In resolving conflicts resulting from, errors, or discrepancies in any of the Contract Documents, the order of precedence shall be as follows:

1. Permits from other agencies as may be required by law, excepting the definition of “PERMITEE” in these permits.
2. Field Orders
3. Change Orders
4. ENGINEER’s written interpretations and clarifications.
5. Agreement
6. Addenda
7. CONTRACTOR's Bid (Bid Form)
8. Supplementary General Conditions
9. Notice Inviting Bids

10. Instructions to Bidders
11. General Conditions
12. Technical Specifications
13. Drawings

B. With reference to the Drawings the order of precedence is as follows:

1. Figures govern over scaled dimensions
2. Detail Drawings govern over general Drawings
3. Addenda/ Change Order drawings govern over Contract Drawings
4. Contract Drawings govern over standard drawings

3.3 AMENDING AND SUPPLEMENTING CONTRACT DOCUMENTS. The Contract Documents may be amended to provide for additions, deletions, and revisions in the WORK or to modify the terms and conditions thereof by a Change Order (pursuant to Article 10 CHANGES IN THE WORK).

3.4 REUSE OF DOCUMENTS. Neither the CONTRACTOR, nor any Subcontractor or Supplier, nor any other person or organization performing any of the WORK under a contract with the OWNER shall have or acquire any title to or ownership rights in any of the Drawings, Technical Specifications, or other documents used on the WORK, and they shall not reuse any of them on the extensions of the Project or any other project without written consent of the OWNER.

ARTICLE 4 AVAILABILITY OF LANDS; PHYSICAL CONDITIONS; REFERENCE POINTS

4.1 AVAILABILITY OF LANDS. The OWNER shall furnish, as indicated in the Contract Documents, the lands upon which the WORK is to be performed, rights-of-way and easements for access thereto, and such other lands which are designated for the use of the CONTRACTOR. Easements for permanent structures or permanent changes in existing facilities will be obtained and paid for by the OWNER, unless otherwise provided in the Contract Documents. Nothing contained in the Contract Documents shall be interpreted as giving the CONTRACTOR exclusive occupancy of the lands or rights-of-way provided. The CONTRACTOR shall provide for all additional lands and access thereto that may be required for temporary construction facilities or storage of materials and equipment; provided, that the CONTRACTOR shall not enter upon nor use any property not under the control of the OWNER until a written temporary construction easement, lease or other appropriate agreement has been executed by the CONTRACTOR and the property owner, and a copy of said agreement furnished to the ENGINEER prior to said use; and, neither the OWNER nor the ENGINEER shall be liable for any claims or damages resulting from the CONTRACTOR's unauthorized trespass or use of any such properties.

4.2 PHYSICAL CONDITIONS - SUBSURFACE AND EXISTING STRUCTURES

A. Explorations and Reports. Reference is made to SGC 4.2 Physical Conditions of the Supplementary General Conditions for identification of those reports of explorations and tests of sub-surface conditions at the site that have been utilized by the ENGINEER in the preparation of the Contract Documents. The CONTRACTOR may rely upon the accuracy of the technical data contained in such reports, however, reports are not to be considered complete or comprehensive and nontechnical data, interpretations, and opinions contained in such reports are not to be relied on by the CONTRACTOR. The CONTRACTOR is

responsible for any further explorations or tests that may be necessary and any interpretation, interpolation, or extrapolation that it makes of any information shown in such reports.

B. Existing Structures. Reference is made to SGC 4.2 Physical Conditions of the Supplementary General Conditions for identification of those drawings of physical conditions in or relating to existing surface and subsurface structures (except Underground Utilities referred to in Paragraph 4.4 herein) which are at or contiguous to the site that have been utilized by the ENGINEER in the preparation of the Contract Documents. The CONTRACTOR may rely upon the accuracy of the technical data contained in such drawings, however, nontechnical data, interpretations, and opinions contained in such drawings are not to be relied on by the CONTRACTOR. The CONTRACTOR is also responsible for any interpretation, interpolation, or extrapolation that it makes of any information shown in such drawings.

4.3 DIFFERING SITE CONDITIONS

A. The CONTRACTOR shall promptly upon discovery (but in no event later than 14 days thereafter) and before the following conditions are disturbed, notify the ENGINEER, in writing of any:

1. Material that the CONTRACTOR believes may be material that is hazardous waste, as defined in Article 1 of these General Conditions, or asbestos, PCB's, petroleum or any other substance or material posing a threat to human or to the environment.
2. Subsurface or latent physical conditions at the site differing from those indicated.
3. Unknown physical conditions at the site of any unusual nature, different materially from those ordinarily encountered and generally recognized as inherent in WORK of the character provided for in the contract.

B. The OWNER shall promptly investigate the conditions, and if it finds that the conditions do materially so differ, or do involve hazardous waste, and cause a decrease or increase in the CONTRACTOR's cost of, or the time required for, performance of any part of the WORK shall issue a Change Order under the procedures described in the contract.

C. In the event that a dispute arises between the OWNER and the CONTRACTOR whether the conditions materially differ, or involved hazardous waste or other materials listed above, or cause a decrease or increase in the CONTRACTOR's cost of, or time required for, performance of any part of the WORK, the CONTRACTOR shall not be excused from any scheduled completion date provided for by the contract, but shall proceed with all WORK to be performed under the contract. The CONTRACTOR shall retain any and all rights provided either by contract or by Law which pertain to the resolution of disputes and protests between the contracting parties.

4.4 PHYSICAL CONDITIONS - UNDERGROUND UTILITIES

A. Indicated. The information and data indicated in the Contract Documents with respect to existing Underground Utilities at or contiguous to the site are based on information and data furnished to the OWNER or the ENGINEER by the owners of such Underground Utilities or by others. Unless it is expressly provided in the Supplementary General Conditions and/or Section 01530 - Protection and Restoration of Existing Facilities of the General Requirements, the OWNER and the ENGINEER shall not be responsible for the accuracy or

completeness of any such information or data, and the CONTRACTOR shall have full responsibility for reviewing and checking all such information and data, for locating all Underground Utilities indicated in the Contract Documents, for coordination of the WORK with the owners of such Underground Utilities during construction, for the safety and protection thereof and repairing any damage thereto resulting from the WORK, the cost of which will be considered as having been included in the Contract Price.

B. Not Indicated. If an Underground Utility is uncovered or revealed at or contiguous to the site which was not indicated in the Contract Documents and which the CONTRACTOR could not reasonably have been expected to be aware of, the CONTRACTOR shall identify the owner of such Underground Utility and give written notice thereof to that owner and shall notify the ENGINEER in accordance with the requirements of the Supplementary General Conditions and Section 01530 - Protection and Restoration of Existing Facilities of the General Requirements.

4.5 REFERENCE POINTS

A. The ENGINEER will provide one bench mark, near or on the site of the WORK, and will provide two points near or on the site to establish a base line for use by the CONTRACTOR for alignment control. Unless otherwise specified in the General Requirements, the CONTRACTOR shall furnish all other lines, grades, and bench marks required for proper execution of the WORK.

B. The CONTRACTOR shall preserve all bench marks, stakes, and other survey marks, and in case of their removal or destruction by its own employees or by its Subcontractor's employees, the CONTRACTOR shall be responsible for the accurate replacement of such reference points by personnel qualified under the Alaska Statute governing the licensing of Architects, Engineers, and Land Surveyors.

4.6 USE OF THE CBJ/STATE LEMON CREEK GRAVEL PIT

A. On City and Borough of Juneau (CBJ) construction projects, the CBJ may make unclassified material available to CONTRACTORs, from the CBJ/State Lemon Creek gravel pit, at a rate less than charged other customers. CONTRACTORs are not required to use material from the CBJ/State pit and the CBJ makes no guarantee as to the quantity or quality of the available material. For this Project, contact Alec Venechuk, CBJ Material Source Manager, at (907) 586-0874 for the current material rates.

B. CONTRACTORs proposing to use gravel from the CBJ/State pit are required to be in good standing for all amounts owed to the CBJ, for previous gravel operations, prior to submitting a mining plan for approval. CONTRACTORs using the pit must comply with Allowable Use Permit USE 2008-00061. Failure to meet these requirements, if so subject, shall be sufficient reason to deny use of the CBJ/State pit as a gravel source. To determine if your company is subject to these requirements, contact the CBJ Engineering Department, Gravel Pit Management, at (907) 586-0874.

C. CONTRACTORs deciding to use material from the CBJ/State pit shall provide an Individual Mining Plan prepared by a professional engineer registered in the State of Alaska. The Individual Mining Plan must be reviewed and approved by the CBJ, prior to commencing

operations within the pit. CONTRACTORs shall also secure a Performance Bond to ensure compliance with contract provisions, including any Individual Mining Plan stipulations. The bond shall remain in full force and effect until a release is obtained from the CBJ.

D. If CONTRACTOR operations for a project do not exceed 500 tons of material, the CONTRACTOR will not be required to provide an Individual Mining Plan prepared by an engineer. However, the CONTRACTOR must submit an Individual Mining Plan that is in compliance with Allowable Use Permit USE 2008-00061 for gravel extraction within the CBJ/State pit. The CONTRACTOR must contact the CBJ Engineering Department for conditions for the extraction.

E. CONTRACTORs using the CBJ material may do primary dry separation (screening) of materials within the pit. Crushing and washing of material will not be allowed. CONTRACTORs shall account for placement of materials removed from the pit. The CBJ may require CONTRACTORs to cross-check weight tickets, submit to an audit, or participate in other measures required by the CBJ to ensure accountability. Unprocessed overburden removed from the pit will not be weighed. All other material mined will be weighed at the CBJ scale. CONTRACTORs will be responsible for loading and/or screening their own material. If asphalt pavement is removed as part of the WORK, CONTRACTORs shall dispose of the material at a to-be-specified location within the pit area, as directed by the CBJ Project Manager.

F. The gravel pit overhead charge shall be paid to the CBJ by the CONTRACTOR within 60 days after removal of all materials from the pit and prior to requesting and/or receiving final payment. Upon completion of each excavation CONTRACTORs shall notify the CBJ, in writing, in sufficient time to perform a field-compliance examination prior to vacating the pit. Any significant deviation from the stipulations of the Individual Mining Plan identified during the field inspection shall be corrected by the CONTRACTOR prior to release of the bond. A signed release from CBJ will be required prior to releasing the CONTRACTOR's bond.

G. If asphalt pavement is removed as part of this WORK, the CONTRACTOR shall dispose of the material at the location designated as the Asphalt Storage Facility, or as directed by the ENGINEER.

H. The CBJ/State pit is a seasonal operation. The hours of operation are from 7:00 a.m. to 6:00 p.m., Monday through Friday, from April 1 through October 15 of the year. CONTRACTORS may obtain gravel on weekends, or during the off-season, by applying for a separate agreement with the City and Borough of Juneau Engineering Department. The CONTRACTOR will be responsible for any additional costs incurred during weekend or off-season operations at the gravel pit.

I. All Contractors/Equipment Operators using the CBJ/State Pit shall be in compliance with Federal Mine Safety and Health Administration regulations for quarry and gravel operations.

ARTICLE 5 BONDS AND INSURANCE

5.1 PERFORMANCE, PAYMENT, AND OTHER BONDS

A. The CONTRACTOR shall furnish, when required, Performance and Payment Bonds on forms provided by the CBJ for the penal sums of 100% of the amount of the Bid award. The surety on each bond may be any corporation or partnership authorized to do business in the State of Alaska as an insurer under AS 21.09. These bonds shall remain in effect for 12 months after the date of final payment and until all obligations and liens under this contract have been satisfied. The CONTRACTOR shall also furnish such other Bonds as are required by the Supplementary General Conditions. All Bonds shall be in the form prescribed by the Contract Documents except as provided otherwise by Laws or Regulations, and shall be executed by such sureties as are named in the current list of "Companies Holding Certificates of Authority as Acceptable Sureties on Federal Bonds and as Acceptable Reinsuring Companies" as published in Circular 570 (amended) by the Audit Staff, Bureau of Government Financial Operations, U.S. Treasury Department. All Bonds signed by an agent must be accompanied by a certified copy of such agent's authority to act.

B. If the surety on any Bond furnished by the CONTRACTOR is declared bankrupt or becomes insolvent or its right to do business is terminated in any state where any part of the WORK is located, the CONTRACTOR shall within 7 days thereafter substitute another Bond and Surety, which must be acceptable to the OWNER.

C. All Bonds required by the Contract Documents to be purchased and maintained by CONTRACTOR shall be obtained from surety companies that are duly licensed or authorized in the State of Alaska to issue Bonds for the limits so required. Such surety companies shall also meet such additional requirements and qualifications as may be provided in the Supplementary General Conditions. The City Engineer may, on behalf of the OWNER, notify the surety of any potential default or liability.

5.2 INSURANCE

A. The CONTRACTOR shall purchase and maintain the insurance required under this paragraph. Such insurance shall include the specific coverages set out herein and be written for not less than the limits of liability and coverages provided in the Supplementary General Conditions, or required by law, whichever are greater. All insurance shall be maintained continuously during the life of the Agreement up to the date of Final Completion and at all times thereafter when the CONTRACTOR may be correcting, removing, or replacing Defective WORK in accordance with Paragraph 13.6, but the CONTRACTOR's liabilities under this Agreement shall not be deemed limited in any way to the insurance coverage required.

B. All insurance required by the Contract Documents to be purchased and maintained by the CONTRACTOR shall be obtained from insurance companies that are duly licensed or authorized in the State of Alaska to issue insurance policies for the limits and coverages so required. Such insurance companies shall have a current Best's Rating of at least an "A" (Excellent) general policy holder's rating and a Class VII financial size category and shall also meet such additional requirements and qualifications as may be provided in the Supplementary General Conditions.

C. The CONTRACTOR shall furnish the OWNER with certificates showing the type, amount, class of operations covered, effective dates and dates of expiration of policies. All of the policies of insurance so required to be purchased and maintained (or the certificates or other

evidence thereof) shall contain a provision or endorsement that the coverage afforded will not be cancelled, reduced in coverage, or renewal refused until at least 30 days' prior written notice has been given to the OWNER by certified mail. All such insurance required herein (except for Workers' Compensation and Employer's Liability) shall name the OWNER, its Consultants and subconsultants and their officers, directors, agents, and employees as "additional insureds" under the policies. The CONTRACTOR shall purchase and maintain the following insurance:

1. Workers' Compensation and Employer's Liability. This insurance shall protect the CONTRACTOR against all claims under applicable state workers' compensation laws. The CONTRACTOR shall also be protected against claims for injury, disease, or death of employees which, for any reason, may not fall within the provisions of a Workers' Compensation law. This policy shall include an "all states" endorsement. The CONTRACTOR shall require each Subcontractor similarly to provide Workers' Compensation Insurance for all of the latter's employees to be engaged in such WORK unless such employees are covered by the protection afforded by the CONTRACTOR's Workers' Compensation Insurance. In case any class of employees is not protected, under the Workers' Compensation Statute, the CONTRACTOR shall provide and shall cause each Subcontractor to provide adequate employer's liability insurance for the protection of such of its employees as are not otherwise protected.
2. Commercial General Liability. This insurance shall be written in comprehensive form and shall protect the CONTRACTOR against all claims arising from injuries to persons other than its employees or damage to property of the OWNER or others arising out of any act or omission of the CONTRACTOR or its agents, employees, or Subcontractors. The policy shall contain no exclusions for any operations within the scope of this contract.
3. Comprehensive Automobile Liability. This insurance shall be written in comprehensive form and shall protect the CONTRACTOR against all claims for injuries to members of the public and damage to property of others arising from the use of motor vehicles, and shall cover operation on or off the site of all motor vehicles licensed for highway use, whether they are owned, non-owned, or hired. Coverage for hired motor vehicles should include endorsement covering liability assumed under this Agreement.
4. Subcontractor's Commercial General Liability Insurance and Commercial Automobile Liability Insurance. The CONTRACTOR shall either require each of its Subcontractors to procure and to maintain Subcontractor's Commercial General Liability and Property Damage Insurance and Vehicle Liability Insurance of the type and in the amounts specified in the Supplementary General Conditions or insure the activities of its Subcontractors in the CONTRACTOR's own policy, in like amount.
5. Builder's Risk. This insurance shall be of the "all risks" type, shall be written in completed value form, and shall protect the CONTRACTOR, the OWNER, and the ENGINEER, against risks of damage to buildings, structures, and materials and equipment. The amount of such insurance shall be not less than the insurable value of the WORK at completion. Builder's risk insurance shall provide for losses to be payable to the CONTRACTOR and the OWNER, as their interests may appear. The policy shall contain a provision that in the event of payment for any loss under the coverage provided, the insurance company shall have no rights of recovery against the

CONTRACTOR, the OWNER, and the ENGINEER. The Builder's Risk policy shall insure against all risks of direct physical loss or damage to property from any external cause including flood and earthquake. Allowable exclusions, if any, shall be as specified in the Supplementary General Conditions.

ARTICLE 6 CONTRACTOR'S RESPONSIBILITIES

6.1 SUPERVISION AND SUPERINTENDENCE

A. The CONTRACTOR shall supervise, inspect, and direct the WORK competently and efficiently, devoting such attention thereto and applying such skills and expertise as may be necessary to perform the WORK in accordance with the Contract Documents. The CONTRACTOR shall be solely responsible for the means, methods, techniques, sequences, and procedures of construction and safety precautions and programs incidental thereto. The CONTRACTOR shall be responsible to see that the completed WORK complies accurately with the Contract Documents.

B. The CONTRACTOR shall designate in writing and keep on the WORK site at all times during its progress a technically qualified, English-speaking superintendent, who is an employee of the CONTRACTOR and who shall not be replaced without written notice to the OWNER and the ENGINEER. The superintendent will be the CONTRACTOR's representative at the site and shall have authority to act on behalf of the CONTRACTOR. All communications given to the superintendent shall be as binding as if given to the CONTRACTOR. The CONTRACTOR shall issue all its communications to the OWNER through the ENGINEER and the ENGINEER only.

C. The CONTRACTOR's superintendent shall be present at the site of the WORK at all times while WORK is in progress. Failure to observe this requirement shall be considered suspension of the WORK by the CONTRACTOR until such time as such superintendent is again present at the site.

6.2 LABOR, MATERIALS, AND EQUIPMENT

A. The CONTRACTOR shall provide competent, suitably qualified personnel to survey and lay out the WORK and perform construction as required by the Contract Documents. The CONTRACTOR shall furnish, erect, maintain, and remove the construction plant and any temporary works as may be required. The CONTRACTOR shall at all times maintain good discipline and order at the site. Except in connection with the safety or protection of persons or the WORK or property at the site or adjacent thereto, and except as otherwise indicated in the Contract Documents, all WORK at the site shall be performed during regular working hours, and the CONTRACTOR will not permit overtime work or the performance of work on Saturday, Sunday, or any legal holiday without the OWNER's written consent. The CONTRACTOR shall apply for this consent through the ENGINEER.

B. Except as otherwise provided in this Paragraph, the CONTRACTOR shall receive no additional compensation for overtime work, i.e., work in excess of 8 hours in any one calendar day or 40 hours in any one calendar week, even though such overtime work may be required under emergency conditions and may be ordered by the ENGINEER in writing. Additional compensation will be paid the CONTRACTOR for overtime work only in the

event extra work is ordered by the ENGINEER and the Change Order specifically authorizes the use of overtime work and then only to such extent as overtime wages are regularly being paid by the CONTRACTOR for overtime work of a similar nature in the same locality.

C. All costs of inspection and testing performed during overtime work by the CONTRACTOR which is allowed solely for the convenience of the CONTRACTOR shall be borne by the CONTRACTOR. The OWNER shall have the authority to deduct the cost of all such inspection and testing from any partial payments otherwise due to the CONTRACTOR.

D. Unless otherwise specified in the Contract Documents, the CONTRACTOR shall furnish and assume full responsibility for all materials, equipment, labor, transportation, construction equipment and machinery, tools, appliances, fuel, power, light, heat, telephone, water, sanitary facilities, and all other facilities and incidentals necessary for the furnishing, performance, testing, start-up, and completion of the WORK.

E. All materials and equipment to be incorporated into the WORK shall be of good quality and new, except as otherwise provided in the Contract Documents. All warranties and guarantees specifically called for by the Specifications shall expressly run to the benefit of the OWNER. If required by the ENGINEER, the CONTRACTOR shall furnish satisfactory evidence (including reports of required tests) as to the kind and quality of materials and equipment. All materials and equipment shall be applied, installed, connected, erected, used, cleaned, and conditioned in accordance with the instructions of the applicable Supplier except as otherwise provided in the Contract Documents; but no provisions of any such instructions will be effective to assign to the ENGINEER, or any of the ENGINEER consultants, agents, or employees, any duty or authority to supervise or direct the furnishing or performance of the WORK or any duty or authority to undertake responsibility contrary to the provisions of Paragraphs 9.9C and 9.9D.

F. The CONTRACTOR shall at all times employ sufficient labor and equipment for prosecuting the several classes of WORK to full completion in the manner and time set forth in and required by these specifications. All workers shall have sufficient skill and experience to perform property the WORK assigned to them. Workers engaged in special WORK, or skilled WORK, shall have sufficient experience in such WORK and in the operation of the equipment required to perform all WORK, properly and satisfactorily.

G. Any person employed by the CONTRACTOR or by any Subcontractor who, in the opinion of the ENGINEER, does not perform the WORK in a proper and skillful manner, or is intemperate or disorderly shall, at the written request of the ENGINEER, be removed forthwith by the CONTRACTOR or Subcontractor employing such person, and shall not be employed again in any portion of the WORK without the approval of the ENGINEER. Should the CONTRACTOR fail to remove such person or persons as required above, or fail to furnish suitable and sufficient personnel for the proper prosecution of the WORK, the ENGINEER may suspend the WORK by written notice until such orders are complied with.

6.3 ADJUSTING PROGRESS SCHEDULE. The CONTRACTOR shall submit monthly updates of the progress schedule to the ENGINEER for acceptance in accordance with the provisions in Section 01300 - CONTRACTOR Submittals in the General Requirements.

6.4 SUBSTITUTES OR "OR-EQUAL" ITEMS. The CONTRACTOR shall submit proposed substitutes or "or-equal" items in accordance with the provisions in Section 01300 - CONTRACTOR Submittals in the General Requirements.

6.5 CONCERNING SUBCONTRACTORS, SUPPLIERS, AND OTHERS.

A. The CONTRACTOR shall be responsible to the OWNER and the ENGINEER for the acts and omissions of its Subcontractors and their employees to the same extent as CONTRACTOR is responsible for the acts and omissions of its own employees. Nothing contained in this Paragraph shall create any contractual relationship between any Subcontractor and the OWNER or the ENGINEER nor relieve the CONTRACTOR of any liability or obligation under the prime contract.

B. The CONTRACTOR shall perform not less than 40% of the WORK with its own forces (i.e., without subcontracting). The 40% requirement shall be understood to mean that the CONTRACTOR shall perform, with its own organization, WORK amounting to at least 40% of the awarded contract amount. The 40% requirement will be calculated based upon the total of the subcontract amounts submitted for contract award, and any other information requested by the OWNER from the apparent low bidder.

6.6 PERMITS

A. Unless otherwise provided in the Supplementary General Conditions, the CONTRACTOR shall obtain and pay for all construction permits and licenses from the agencies having jurisdiction, including the furnishing of insurance and bonds if required by such agencies. The enforcement of such requirements under this contract shall not be made the basis for claims for additional compensation. The OWNER shall assist the CONTRACTOR, when necessary, in obtaining such permits and licenses. The CONTRACTOR shall pay all governmental charges and inspection fees necessary for the prosecution of the WORK, which are applicable at the time of opening of Bids. The CONTRACTOR shall pay all charges of utility owners for connections to the WORK.

B. These Contract Documents may require that the WORK be performed within the conditions and/or requirements of local, state and/or federal permits. These permits may be bound within the Contract Documents, included within the Contract Documents by reference, or included as part of the WORK, as designated in this Section. The CONTRACTOR is responsible for completing the WORK required for compliance with all permit requirements; this WORK is incidental to other items in the Contract Documents. Any reference to the PERMITTEE in the permits shall mean the CONTRACTOR. If any permits were acquired by the OWNER, this action was done to expedite the start of construction. If the CONTRACTOR does not complete the WORK within the specified permit window, the CONTRACTOR shall be responsible for the permit extension, and for completing any additional requirements placed upon the permit.

C. The OWNER shall apply for, and obtain, the necessary building permit for this Project, however, the CONTRACTOR is responsible for scheduling and coordinating all necessary inspections. The CBJ Inspection number is 586-1703. All other provisions of this Section remain in effect.

6.7 PATENT FEES AND ROYALTIES. The CONTRACTOR shall pay all license fees and royalties and assume all costs incident to the use in the performance of the WORK or the incorporation in the WORK of any invention, design, process, product, software or device which is the subject of patent rights or copyrights held by others. If a particular invention, design, process, product, or device is specified in the Contract Documents for use in the performance of the WORK and if to the actual knowledge of the OWNER or the ENGINEER its use is subject to patent rights or copyrights calling for the payment of any license fee or royalty to others, the existence of such rights shall be disclosed by the OWNER in the Contract Documents. The CONTRACTOR shall indemnify, defend and hold harmless the OWNER and the ENGINEER and anyone directly or indirectly employed by either of them from and against all claims, damages, losses, and expenses (including attorneys' fees and court costs) arising out of any infringement of patent rights or copyrights incident to the use in the performance of the WORK or resulting from the incorporation in the WORK of any invention, design, process, product, or device not specified in the Contract Documents, and shall defend all such claims in connection with any alleged infringement of such rights.

6.8 LAWS AND REGULATIONS. The CONTRACTOR shall observe and comply with all federal, state, and local laws, ordinances, codes, orders, and regulations which in any manner affect those engaged or employed on the WORK, the materials used in the WORK, or the conduct of the WORK. If any discrepancy or inconsistency should be discovered in this contract in relation to any such law, ordinance, code, order, or regulation, the CONTRACTOR shall report the same in writing to the ENGINEER. The CONTRACTOR shall indemnify, defend, and hold harmless the OWNER, the ENGINEER, and their officers, agents, and employees against all claims or liability arising from violation of any such law, ordinance, code, order, or regulation, whether by CONTRACTOR or by its employees, Subcontractors, or third parties. Any particular law or regulation specified or referred to elsewhere in the Contract Documents shall not in any way limit the obligation of the CONTRACTOR to comply with all other provisions of federal, state, and local laws and regulations.
The OWNER may, per AS 36.30, audit the CONTRACTOR's or Subcontractor(s) records that are related to the cost or pricing data for this contract, all related Change Orders, and/or contract modifications.

6.9 TAXES. The CONTRACTOR shall pay all sales, consumer, use, and other similar taxes required to be paid by the CONTRACTOR in accordance with the Laws and Regulations of the place of the Project which are applicable during the performance of the WORK.

6.10 USE OF PREMISES. The CONTRACTOR shall confine construction equipment, the storage of materials and equipment, and the operations of workers to (1) the Project site, (2) the land and areas identified in and permitted by the Contract Documents, and (3) the other land and areas permitted by Laws and Regulations, rights-of-way, permits, leases and easements. The CONTRACTOR shall assume full responsibility for any damage to any such land or area, or to the owner or occupant thereof or of any land or areas contiguous thereto, resulting from the performance of the WORK. Should any claim be made against the OWNER or the ENGINEER by any such owner or occupant because of the performance of the WORK, the CONTRACTOR shall promptly attempt to settle with such other party by agreement or otherwise resolve the claim through litigation. The CONTRACTOR shall, to the fullest extent permitted by Laws and Regulations, indemnify, defend, and hold the OWNER and the ENGINEER harmless from and against all claims, damages, losses, and expenses (including, but not limited to, fees of engineers attorneys, and other professionals and court costs) arising directly, indirectly, or consequentially out of any action, legal or equitable, brought by any such owner or occupant against the OWNER, the ENGINEER, their Consultants, Sub-consultants, and the officers,

directors, employees and agents of each and any of them to the extent caused by or based upon the CONTRACTOR's performance of the WORK.

6.11 SAFETY AND PROTECTION

A. The CONTRACTOR shall be responsible for initiating, maintaining, and supervising all safety precautions and programs in connection with the WORK. The CONTRACTOR shall take all necessary precautions for the safety of, and shall provide the necessary protection to prevent damage, injury or loss to:

1. all employees on the WORK and other persons and organizations who may be affected thereby;
2. all the WORK and materials and equipment to be incorporated therein, whether in storage on or off the site; and
3. other property at the site or adjacent thereto, including trees, shrubs, lawns, walks, pavements, roadways, structures, and utilities not designated for removal, relocation, or replacement in the course of construction.

B. The CONTRACTOR shall comply with all applicable Laws and Regulations whether referred to herein or not) of any public body having jurisdiction for the safety of persons or property or to protect them from damage, injury, or loss and shall erect and maintain all necessary safeguards for such safety and protection. The CONTRACTOR shall notify owners of adjacent property and utilities when prosecution of the WORK may affect them, and shall cooperate with them in the protection, removal, relocation, and replacement of their property.

C. The CONTRACTOR shall designate a qualified and experienced safety representative at the site whose duties and responsibilities shall be the prevention of accidents and the maintaining and supervising of safety precautions and program.

D. Materials that contain hazardous substances or mixtures may be required on the WORK. A Material Safety Data Sheet shall be requested by the CONTRACTOR from the manufacturer of any hazardous product used.

E. Material usage shall be accomplished with strict adherence to all safety requirements and all manufacturer's warnings and application instructions listed on the Material Safety Data Sheet and on the product container label.

F. The CONTRACTOR shall be responsible for coordinating communications on any exchange of Material Safety Data Sheets or other hazardous material information that is required to be made available to, or exchanged between, or among, employers at the site in accordance with Laws or Regulations.

G. The CONTRACTOR shall notify the ENGINEER if it considers a specified product or its intended usage to be unsafe. This notification must be given to the ENGINEER prior to the product being ordered, or if provided by some other party, prior to the product being incorporated in the WORK.

6.12 SHOP DRAWINGS AND SAMPLES

A. After checking and verifying all field measurements and after complying with applicable procedures specified in the General Requirements, the CONTRACTOR shall submit to the ENGINEER for review, all Shop Drawings in accordance with Section 01300 - CONTRACTOR Submittals in the General Requirements.

B. The CONTRACTOR shall also submit to the ENGINEER for review all samples in accordance with Section 01300 - CONTRACTOR Submittals in the General Requirements.

C. Before submittal of each shop drawing or sample, the CONTRACTOR shall have determined and verified all quantities, dimensions, specified performance criteria, installation requirements, materials, catalog numbers, and similar data with respect thereto and reviewed or coordinated each Shop Drawing or sample with other Shop Drawings and samples and with the requirements of the WORK and the Contract Documents.

6.13 CONTINUING THE WORK. The CONTRACTOR shall carry on the WORK and adhere to the progress schedule during all disputes or disagreements with the OWNER. No work shall be delayed or postponed pending resolution of any disputes or disagreements, except as the CONTRACTOR and the OWNER may otherwise agree in writing.

6.14 INDEMNIFICATION

A. To the fullest extent permitted by Laws and Regulations, the CONTRACTOR shall indemnify, defend, and hold harmless the OWNER, the ENGINEER, their Consultants, Sub-consultants and the officers, directors, employees, and agents of each and any of them, against and from all claims and liability arising under, by reason of or incidentally to the contract or any performance of the WORK, but not from the sole negligence or willful misconduct of the OWNER, and the ENGINEER. Such indemnification by the CONTRACTOR shall include but not be limited to the following:

1. Liability or claims resulting directly or indirectly from the negligence or carelessness of the CONTRACTOR, its employees, or agents in the performance of the WORK, or in guarding or maintaining the same, or from any improper materials, implements, or appliances used in its construction, or by or on account of any act or omission of the CONTRACTOR, its employees, agents, or third parties;
2. Liability or claims arising directly or indirectly from bodily injury, occupational sickness or disease, or death of the CONTRACTOR’s or Subcontractor’s own employees engaged in the WORK resulting in actions brought by or on behalf of such employees against the OWNER, and the ENGINEER;
3. Liability or claims arising directly or indirectly from or based on the violation of any law, ordinance, regulation, order, or decree, whether by the CONTRACTOR, its employees, or agents;
4. Liability or claims arising directly or indirectly from the use or manufacture by the CONTRACTOR, its employees, or agents in the performance of this contract of any copyrighted or non-copyrighted composition, secret process, patented or non-patented invention, computer software, article, or appliance, unless otherwise specifically stipulated in this contract.

5. Liability or claims arising directly or indirectly from the breach of any warranties, whether express or implied, made to the OWNER or any other parties by the CONTRACTOR, its employees, or agents;
6. Liabilities or claims arising directly or indirectly from the willful or criminal misconduct of the CONTRACTOR, its employees, or agents; and,
7. Liabilities or claims arising directly or indirectly from any breach of the obligations assumed herein by the CONTRACTOR.

B. The CONTRACTOR shall reimburse the ENGINEER and the OWNER for all costs and expenses, (including but not limited to fees and charges of engineers, attorneys, and other professionals and court costs including all costs of appeals) incurred by said OWNER, and the ENGINEER in enforcing the provisions of this Paragraph 6.14.

C. The indemnification obligation under this Paragraph 6.14 shall not be limited in any way by any limitation of the amount or type of damages, compensation, or benefits payable by or for the CONTRACTOR or any such Subcontractor or other person or organization under workers' compensation acts, disability benefit acts, or other employee benefit acts.

6.15 CONTRACTOR'S DAILY REPORTS. The CONTRACTOR shall complete a daily report indicating total manpower for each construction trade, major equipment on site, each Subcontractor's manpower, weather conditions, etc., involved in the performance of the WORK. The daily report shall be completed on forms provided by the ENGINEER and shall be submitted to the ENGINEER at the conclusion of each workday. The report should comment on the daily progress and status of the WORK within each major component of the WORK. These components will be decided by the ENGINEER. CONTRACTOR shall record the name, affiliation, time of arrival and departure, and reason for visit for all visitors to the location of the WORK.

6.16 ASSIGNMENT OF CONTRACT. The CONTRACTOR shall not assign, sublet, sell, transfer, or otherwise dispose of the contract or any portion thereof, or its right, title, or interest therein, or obligations thereunder, without the written consent of the OWNER except as imposed by law. If the CONTRACTOR violates this provision, the contract may be terminated at the option of the OWNER. In such event, the OWNER shall be relieved of all liability and obligations to the CONTRACTOR and to its assignee or transferee, growing out of such termination.

6.17 CONTRACTOR'S RESPONSIBILITY FOR UTILITY PROPERTY AND SERVICES. It is understood that any turn-on or turn-off, line locates and any other work or assistance necessary by the CBJ Water Utilities Division, will be at the CONTRACTOR's expense unless otherwise stated in the bid documents. All cost must be agreed to prior to any related actions, and will be considered incidental to the project cost. Billing to the CONTRACTOR will be direct from the CBJ Water Utilities Division.

6.18 OPERATING WATER SYSTEM VALVES

A. The CONTRACTOR shall submit a written request, to the ENGINEER, for approval to operate any valve on any in-service section of the CBJ water system. The request must be submitted at least 24-hours prior to operating any valves. The CBJ Water Utilities Division reserves the right to approve or deny the request. The request shall specifically identify each valve to be operated, the time of operation, and the operation to be performed. The

CONTRACTOR shall obtain the written approval of the ENGINEER for any scheduled operation before operating any valve.

B. The CONTRACTOR shall be responsible for all damages, both direct and consequential, to the City or any other party, caused by unauthorized operation of any valve of the CBJ water system.

6.19 CONTRACTOR'S WORK SCHEDULE LIMITATIONS. Construction of Buildings and Projects. It is unlawful to operate any pile driver, power shovel, pneumatic hammer, derrick, power hoist, or similar heavy construction equipment before 7:00 a.m. or after 10:00 p.m., Monday through Friday, or before 9:00 a.m. or after 10:00 p.m., Saturday and Sunday, unless a permit shall first be obtained from the City and Borough Building Official. Such permit shall be issued by the Building Official only upon a determination that such operation during hours not otherwise permitted hereunder is necessary and will not result in unreasonable disturbance to surrounding residents.

ARTICLE 7 OTHER WORK

7.1 RELATED WORK AT SITE

A. The OWNER may perform other work related to the Project at the site by the OWNER's own forces, have other work performed by utility owners, or let other direct contracts therefor which may contain General Conditions similar to these. If the fact that such other work is to be performed was not noted in the Contract Documents, written notice thereof will be given to the CONTRACTOR prior to starting any such other work.

B. The CONTRACTOR shall afford each other contractor who is a party to such a direct contract and each utility owner (or the OWNER, if the OWNER is performing the additional work with the OWNER's employees) proper and safe access to the site and a reasonable opportunity for the introduction and storage of materials and equipment and the execution of such work, and shall properly connect and coordinate the WORK with theirs. The CONTRACTOR shall do all cutting, fitting, and patching of the WORK that may be required to make its several parts come together properly and integrate with such other work. The CONTRACTOR shall not endanger any work of others by cutting, excavating, or otherwise altering their work and will only cut or alter their work with the written consent of the ENGINEER and the others whose work will be affected.

C. If the proper execution or results of any part of the CONTRACTOR's work depends upon the work of any such other contractor or utility owner (or OWNER), the CONTRACTOR shall inspect and report to the ENGINEER in writing any delays, defects, or deficiencies in such other work that render it unavailable or unsuitable for such proper execution and results. The CONTRACTOR's failure to report such delays, defects, or deficiencies will constitute an acceptance of the other work as fit and proper for integration with the CONTRACTOR's work except for latent or nonapparent defects and deficiencies in the other work.

7.2 COORDINATION. If the OWNER contracts with others for the performance of other work on the Project at the site, the person or organization who will have authority and responsibility for coordination of the activities among the various prime contractors will be identified in the Supplementary General Conditions, and the specific matters to be covered by such authority and

responsibility will be itemized and the extent of such authority and responsibilities will be provided in the Supplementary General Conditions.

ARTICLE 8 OWNER'S RESPONSIBILITIES

8.1 COMMUNICATIONS

A. The OWNER shall issue all its communications to the CONTRACTOR through the ENGINEER.

B. The CONTRACTOR shall issue all its communications to the OWNER through the ENGINEER.

8.2 PAYMENTS. The OWNER shall make payments to the CONTRACTOR as provided in Paragraphs 14.5, 14.8, 14.9 and 14.10.

8.3 LANDS, EASEMENTS, AND SURVEYS. The OWNER's duties in respect of providing lands and easements and providing surveys to establish reference points are set forth in Paragraphs 4.1 and 4.5.

8.4 CHANGE ORDERS. The OWNER shall execute Change Orders as indicated in Paragraph 10.1F.

8.5 INSPECTIONS AND TESTS. The OWNER's responsibility in respect of inspections, tests, and approvals is set forth in Paragraph 13.3.

8.6 SUSPENSION OF WORK. In connection with the OWNER's right to stop WORK or suspend WORK, see Paragraphs 13.4 and 15.1.

8.7 TERMINATION OF AGREEMENT. Paragraphs 15.2 and 15.3 deal with the OWNER's right to terminate services of the CONTRACTOR.

ARTICLE 9 ENGINEER'S STATUS DURING CONSTRUCTION

9.1 OWNER'S REPRESENTATIVE. The ENGINEER will be the OWNER's representative during the construction period. The duties and responsibilities and the limitations of authority of the ENGINEER as the OWNER's representative during construction are set forth in the Contract Documents.

9.2 VISITS TO SITE. The ENGINEER will make visits to the site during construction to observe the progress and quality of the WORK and to determine, in general, if the WORK is proceeding in accordance with the Contract Documents. Exhaustive or continuous on-site inspections to check the quality or quantity of the WORK will not be required of the ENGINEER. The ENGINEER will not, during such visits, or as a result of such observations of the CONTRACTOR's WORK in progress, supervise, direct, or have control over the CONTRACTOR's WORK.

9.3 PROJECT REPRESENTATION. The ENGINEER may furnish an Inspector to assist in observing the performance of the WORK. The duties, responsibilities, and limitations of authority are as follows:

A. Duties, Responsibilities and Limitations of Authority of Inspector

General. The Inspector, who is the ENGINEER's Agent, will act as directed by and under the supervision of the ENGINEER and will confer with the ENGINEER regarding its actions. The Inspector's dealings in matters pertaining to the on-site WORK shall, in general, be only with the ENGINEER and the CONTRACTOR, and dealings with Subcontractors shall only be through or with the full knowledge of the CONTRACTOR. Written communication with the OWNER will be only through or as directed by the ENGINEER.

Duties and Responsibilities. The Inspector may:

1. Review the progress schedule, list of Shop Drawing submittals and schedule of values prepared by the CONTRACTOR and consult with the ENGINEER concerning their acceptability.
2. Attend pre-construction conferences. Arrange a schedule of progress meetings and other job conferences as required in consultation with the ENGINEER and notify those expected to attend in advance. Attend meetings and maintain and circulate copies of minutes thereof.
3. Serve as the ENGINEER's liaison with the CONTRACTOR, working principally through the CONTRACTOR's superintendent and assist said superintendent in understanding the intent of the Contract Documents. Assist the ENGINEER in serving as the OWNER's liaison with the CONTRACTOR when the CONTRACTOR's operations affect the OWNER's on-site operations.
4. As requested by the ENGINEER, assist in obtaining from the OWNER additional details or information, when required at the site for proper execution of the WORK.
5. Receive and record date of receipt of Shop Drawings and samples, receive samples which are furnished at the site by the CONTRACTOR and notify the ENGINEER of their availability for examination.
6. Conduct on-site observations of the WORK in progress to assist the ENGINEER in determining if the WORK is proceeding in accordance with the Contract Documents.
7. Report to the ENGINEER whenever the Inspector believes that any WORK is unsatisfactory, faulty, or defective or does not conform to the Contract Documents, or does not meet the requirements of any inspection, tests or approval required to be made or has been damaged prior to final payment; and advise the ENGINEER when the Inspector believes WORK should be corrected or rejected or should be uncovered for observation, or requires special testing, inspection, or approval.
8. Verify that the tests, equipment, and systems startups and operating and maintenance instruction are conducted as required by the Contract Documents and in presence of the required personnel, and that the CONTRACTOR maintains adequate records thereof; observe, record and report to the ENGINEER appropriate details relative to the test procedures and start-ups.
9. Accompany visiting inspectors representing public or other agencies having jurisdiction over the WORK, record the outcome of these inspections, and report to the ENGINEER.
10. Transmit to the CONTRACTOR the ENGINEER's clarifications and interpretations of the Contract Documents.
11. Consider and evaluate the CONTRACTOR's suggestions for modifications in the Contract Documents and report them with recommendations to the ENGINEER.
12. Maintain at the job site orderly files for correspondence, reports of job conferences, Shop Drawings and sample submittals, reproductions of original Contract Documents including all addenda, Change Orders, field orders, additional Drawings issued

subsequent to the execution of the contract, the ENGINEER's clarifications and interpretations of the Contract Documents, progress reports, and other related documents.

13. Keep a diary or log book, recording hours on the job site, weather conditions, data relative to questions of extras or deductions, list all project visitors, daily activities, decisions, observations in general, and specific observations in more detail as in the case of performing and observing test procedures. Send copies to the ENGINEER.
14. Record names, addresses, and telephone numbers of the CONTRACTOR, Subcontractors, and major suppliers of materials and equipment.
15. Furnish the ENGINEER with periodic reports as required of progress of the WORK and the CONTRACTOR's compliance with the accepted progress schedule and schedule of CONTRACTOR submittals.
16. Consult with the ENGINEER in advance of scheduled major tests, inspections, or start of important phases of the WORK.
17. Report immediately to the ENGINEER upon the occurrence of any accident.
18. Review applications for payment with the CONTRACTOR for compliance with the established procedure for their submittal and forward them with recommendations to the ENGINEER, noting particularly their relation to the schedule of values, WORK completed, and materials and equipment delivered at the site but not incorporated in the WORK.
19. During the course of the WORK, verify that certificates, maintenance and operation manuals, and other data required to be assembled and furnished by the CONTRACTOR are applicable to the items actually installed; and deliver this material to the ENGINEER for its review and forwarding to the OWNER prior to final acceptance of the WORK.
20. Before the ENGINEER prepares a Certificate of Substantial Completion/Notice of Completion, as applicable, review the CONTRACTOR's punch list items requiring completion or correction and add any items that CONTRACTOR has omitted.
21. Conduct final inspection in the company of the ENGINEER, the OWNER, and the CONTRACTOR, and prepare a final punch list of items to be completed or corrected.
22. Verify that all items on the punch list have been completed or corrected and make recommendations to the ENGINEER concerning acceptance.

Limitations of Authority. Except upon written instruction of the ENGINEER, the Inspector:

1. Shall not authorize any deviation from the Contract Documents or approve any substitute material or equipment.
2. Shall not exceed limitations on the ENGINEER's authority as set forth in the Contract Documents.
3. Shall not undertake any of the responsibilities of the CONTRACTOR, Subcontractors or CONTRACTOR's superintendent, or expedite the WORK.
4. Shall not advise on or issue directions relative to any aspect of the means, methods, techniques, sequences, or procedures of construction unless such is specifically called for in the Contract Documents.
5. Shall not advise on or issue directions as to safety precautions and programs in connection with the WORK.

9.4 CLARIFICATIONS AND INTERPRETATIONS. The ENGINEER will issue with reasonable promptness such written clarifications or interpretations of the requirements of the Contract

Documents (in the form of Drawings or otherwise) as the ENGINEER may determine necessary, which shall be consistent with, or reasonably inferred from, the overall intent of the Contract Documents.

9.5 AUTHORIZED VARIATIONS IN WORK. The ENGINEER may authorize variations in the WORK from the requirements of the Contract Documents. These may be accomplished by a Field Order and will require the CONTRACTOR to perform the WORK involved in a manner that minimizes the impact to the WORK and the contract completion date. If the CONTRACTOR believes that a Field Order justifies an increase in the Contract Price or an extension of the Contract Time, the CONTRACTOR may make a claim therefor as provided in Article 11 or 12.

9.6 REJECTING DEFECTIVE WORK. The ENGINEER will have authority to reject WORK which the ENGINEER believes to be defective and will also have authority to require special inspection or testing of the WORK as provided in Paragraph 13.3G, whether or not the WORK is fabricated, installed, or completed.

9.7 CONTRACTOR SUBMITTALS, CHANGE ORDERS, AND PAYMENTS

A. In accordance with the procedures set forth in the General Requirements, the ENGINEER will review all CONTRACTOR submittals, including Shop Drawings, samples, substitutes, or "or equal" items, etc., in order to determine if the items covered by the submittals will, after installation or incorporation in the WORK, conform to the requirements of the Contract Documents and be compatible with the design concept of the completed project as a functioning whole as indicated by the Contract Documents. The ENGINEER's review will not extend to means, methods, techniques, sequences or procedures of construction or to safety precautions or programs incident thereto.

B. In connection with the ENGINEER's responsibilities as to Change Orders, see Articles 10, 11, and 12.

C. In connection with the ENGINEER's responsibilities in respect of Applications for Payment, see Article 14.

9.8 DECISIONS ON DISPUTES

A. The ENGINEER will be the initial interpreter of the requirements of the Contract Documents and judge of the acceptability of the WORK thereunder. Claims, disputes, and other matters relating to the acceptability of the WORK; the interpretation of the requirements of the Contract Documents pertaining to the performance of the WORK; and those claims under Articles 11 and 12 in respect to changes in the Contract Price or Contract Time will be referred initially to the ENGINEER in writing with a request for formal decision in accordance with this paragraph, which the ENGINEER will render in writing within 30 days of receipt of the request. Written notice of each such claim, dispute, and other matter will be delivered by the CONTRACTOR to the ENGINEER promptly (but in no event later than 30 days) after the occurrence of the event giving rise thereto. Written supporting data will be submitted to the ENGINEER within 60 days after such occurrence unless the ENGINEER allows an additional period of time to ascertain more accurate data in support of the claim.

B. The rendering of a decision by the ENGINEER with respect to any such claim, dispute, or other matter (except any which have been waived by the making or acceptance of final payment as provided in Paragraph 14.12) will be a condition precedent to any exercise by the OWNER or the CONTRACTOR of such rights or remedies as either may otherwise have under the Contract Documents or by Law or Regulations in respect of any such claim, dispute, or other matter.

9.9 LIMITATION ON ENGINEER'S RESPONSIBILITIES

A. Neither the ENGINEER's authority to act under this Article or other provisions of the Contract Documents nor any decision made by the ENGINEER in good faith either to exercise or not exercise such authority shall give rise to any duty or responsibility of the ENGINEER to the CONTRACTOR, any Subcontractor, any Supplier, any surety for any of them, or any other person or organization performing any of the WORK.

B. Whenever in the Contract Documents the terms "as ordered," "as directed," "as required," "as allowed," "as reviewed," "as approved," or terms of like effect or import are used, or the adjectives "reasonable," "suitable," "acceptable," "proper," or "satisfactory" or adjectives of like effect or import are used to describe a requirement, direction, review, or judgment of the ENGINEER as to the WORK, it is intended that such requirement, direction, review, or judgment will be solely to evaluate the WORK for compliance with the requirements of the Contract Documents, and conformance with the design concept of the completed Project as a functioning whole as indicated by the Contract Documents, unless there is a specific statement indicating otherwise. The use of any such term or adjective shall not be effective to assign to the ENGINEER any duty or authority to supervise or direct the performance of the WORK or any duty or authority to undertake responsibility contrary to the provisions of Paragraph 9.9C or 9.9D.

C. The ENGINEER will not supervise, direct, control, or have authority over or be responsible for the CONTRACTOR's means, methods, techniques, sequences, or procedures of construction, or the safety precautions and programs incident thereto, or for any failure of the CONTRACTOR to comply with Laws and Regulations, applicable to the performance of the WORK. The ENGINEER will not be responsible for the CONTRACTOR's failure to perform the WORK in accordance with the Contract Documents.

D. The ENGINEER will not be responsible for the acts or omissions of the CONTRACTOR nor of any Subcontractor, supplier, or any other person or organization performing any of the WORK.

ARTICLE 10 CHANGES IN THE WORK

10.1 GENERAL

A. Without invalidating the Agreement and without notice to any surety, the OWNER may at any time or from time to time, order additions, deletions, or revisions in the WORK; these will be authorized by a written Field Order and/or a Change Order issued by the ENGINEER.

B. If the CONTRACTOR believes that it is entitled to an increase or decrease in the Contract Price, or an extension or shortening in the Contract Time as the result of a Field Order, a claim may be made as provided in Articles 11 and 12.

C. If the OWNER and CONTRACTOR agree on the value of any work, or the amount of Contract Time that should be allowed as a result of a Field Order, upon receiving written notice from the ENGINEER, the CONTRACTOR shall proceed so as to minimize the impact on and delays to the work pending the issuance of a Change Order.

D. If the OWNER and the CONTRACTOR are unable to agree as to the extent, if any, of an increase or decrease in the Contract Price or an extension or shortening of the Contract Time that should be allowed as a result of a Field Order, the ENGINEER can direct the CONTRACTOR to proceed on the basis of Time and Materials so as to minimize the impact on and delays to WORK, and a claim may be made therefor as provided in Articles 11 and 12.

E. The CONTRACTOR shall not be entitled to an increase in the Contract Price nor an extension of the Contract Time with respect to any work performed that is not required by the Contract Documents as amended, modified, supplemented by Change Order, except in the case of an emergency and except in the case of uncovering work as provided in Paragraph 13.3G.

F. The OWNER and the CONTRACTOR shall execute appropriate Change Orders covering:

1. changes in the WORK which are ordered by the OWNER pursuant to Paragraph 10.1A;
2. changes required because of acceptance of Defective WORK under Paragraph 13.7;
3. changes in the Contract Price or Contract Time which are agreed to by the parties; or
4. changes in the Contract Price or Contract Times which embody the substance of any written decision rendered by the ENGINEER pursuant to Paragraph 9.8.

G. If notice of any change is required by the provisions of any Bond to be given to a surety, the giving of any such notice will be the CONTRACTOR's responsibility, and the amount of each applicable Bond shall be adjusted accordingly.

10.2 ALLOWABLE QUANTITY VARIATIONS

A. In the event of an increase or decrease in Bid item quantity of a unit price contract, the total amount of WORK actually done or materials or equipment furnished shall be paid for according to the unit price established for such WORK under the Contract Documents, wherever such unit price has been established; provided, that an adjustment in the Contract Price may be made for changes which result in an increase or decrease in excess of 25% of

the estimated quantity of any major item of the WORK. Major Item is defined as any bid item amount that is ten percent (10%) or more of the total contract amount.

B. In the event a part of the WORK is to be entirely eliminated and no lump sum or unit price is named in the Contract Documents to cover such eliminated work, the price of the eliminated work shall be agreed upon in writing by the OWNER and the CONTRACTOR. If the OWNER and the CONTRACTOR fail to agree upon the price of the eliminated work, said price shall be determined in accordance with the provisions of Article 11.

ARTICLE 11 CHANGE OF CONTRACT PRICE

11.1 GENERAL

A. The Contract Price constitutes the total compensation payable to the CONTRACTOR for performing the WORK. All duties, responsibilities, and obligations assigned to or undertaken by the CONTRACTOR to complete the WORK shall be at its expense without change in the Contract Price.

B. The Contract Price may only be changed by a Change Order. Any claim for an increase in the Contract Price shall be based on written notice delivered by the CONTRACTOR to the ENGINEER promptly (but in no event later than 7 days) after the start of the occurrence or the event giving rise to the claim and stating the general nature of the claim. Notice of the amount of the claim with supporting data shall be delivered within 14 days after such occurrence (unless the ENGINEER allows an additional period of time to ascertain more accurate data in support of the claim) and shall be accompanied by the CONTRACTOR's written statement that the amount claimed covers all known amounts (direct, indirect, and consequential) to which the CONTRACTOR is entitled as a result of said occurrence or event. All claims for adjustment in the Contract Price shall be determined by the ENGINEER in accordance with Paragraph 9.8A if the OWNER and the CONTRACTOR cannot otherwise agree on the amount involved. No claim for an adjustment in the Contract Price will be valid if not submitted in accordance with this Paragraph 11.1B.

C. The value of any WORK covered by a Change Order or of any claim for an increase or decrease in the Contract Price shall be determined in one of the following ways:

1. Where the WORK involved is covered by unit prices contained in the Contract Documents, by application of unit prices to the quantities of the items involved.
2. By mutual acceptance of a lump sum, which may include an allowance for overhead and profit not necessarily in accordance with Paragraph 11.4.
3. On the basis of the cost of WORK (determined as provided in Paragraphs 11.3) plus a CONTRACTOR's fee for overhead and profit (determined as provided in Paragraph 11.4).

11.2 COSTS RELATING TO WEATHER. The CONTRACTOR shall have no claims against the OWNER for damages for any injury to WORK, materials, or equipment, resulting from the action of the elements. If, however, in the opinion of the ENGINEER, the CONTRACTOR has made all reasonable efforts to protect the materials, equipment and work, the CONTRACTOR may be granted a reasonable extension of Contract Time to make proper repairs, renewals, and replacements of the work, materials, or equipment.

11.3 COST OF WORK (BASED ON TIME AND MATERIALS)

A. General. The term "cost of work" means the sum of all costs necessarily incurred and paid by the CONTRACTOR for labor, materials, and equipment in the proper performance of extra work. Except as otherwise may be agreed to in writing by the OWNER, such costs shall be in amounts no higher than those prevailing in the locality of the Project; shall include only the following items, and shall not include any of the costs itemized in Paragraph 11.5 EXCLUDED COSTS.

B. Labor. The costs of labor will be the actual cost for wages prevailing for each craft or type of workers performing the extra work at the time the extra work is done, plus employer payments of payroll taxes, worker's compensation insurance, liability insurance, health and welfare, pension, vacation, apprenticeship funds, and other direct costs resulting from Federal, State or local laws, as well as assessments or benefits required by lawful collective bargaining agreements. Labor costs for equipment operators and helpers shall be paid only when such costs are not included in the invoice for equipment rental. The labor costs for forepersons shall be proportioned to all of their assigned work and only that applicable to extra work shall be paid. Non-direct labor costs including superintendence shall be considered part of the mark-up set out in paragraph 11.4.

C. Materials. The cost of materials reported shall be at invoice or lowest current price at which materials are locally available and delivered to the job in the quantities involved, plus the cost of freight, delivery and storage, subject to the following:

1. Trade discounts available to the purchaser shall be credited to the OWNER notwithstanding the fact that such discounts may not have been taken by the CONTRACTOR.
2. For materials secured by other than a direct purchase and direct billing to the purchaser, the cost shall be deemed to be the price paid to the actual supplier as determined by the ENGINEER. Mark-up except for actual costs incurred in the handling of such materials will not be allowed.
3. Payment for materials from sources owned wholly or in part by the purchaser shall not exceed the price paid by the purchaser for similar materials from said sources on extra work items or the current wholesale price for such materials delivered to the work site, whichever price is lower.
4. If in the opinion of the ENGINEER the cost of material is excessive, or the CONTRACTOR does not furnish satisfactory evidence of the cost of such material, then the cost shall be deemed to be the lowest current wholesale price for the quantity concerned delivered to the work site less trade discount. The OWNER reserves the right to furnish materials for the extra work and no claim shall be allowed by the CONTRACTOR for costs and profit on such materials.

D. Equipment. The CONTRACTOR will be paid for the use of equipment at the rental rate listed for such equipment specified in the Supplementary General Conditions. Such rental rate will be used to compute payments for equipment whether the equipment is under the CONTRACTOR's control through direct ownership, leasing, renting, or another method of acquisition. The rental rate to be applied for use of each item of equipment shall be the rate resulting in the least total cost to the OWNER for the total period of use. If it is deemed

necessary by the CONTRACTOR to use equipment not listed in the publication specified in the Supplementary General Conditions, an equitable rental rate for the equipment will be established by the ENGINEER. The CONTRACTOR may furnish cost data which might assist the ENGINEER in the establishment of the rental rate.

1. All equipment shall, in the opinion of the ENGINEER, be in good working condition and suitable for the purpose for which the equipment is to be used.
2. Before construction equipment is used on the extra work, the CONTRACTOR shall plainly stencil or stamp an identifying number thereon at a conspicuous location, and shall furnish to the ENGINEER, in duplicate, a description of the equipment and its identifying number.
3. Unless otherwise specified, manufacturer's ratings and manufacturer approved modifications shall be used to classify equipment for the determination of applicable rental rates. Equipment which has no direct power unit shall be powered by a unit of at least the minimum rating recommended by the manufacturer.
4. Individual pieces of equipment or tools having a replacement value of $200 or less, whether or not consumed by use, shall be considered to be small tools and no payment will be made therefor.
5. Rental time will not be allowed while equipment is inoperative due to breakdowns.
6. Equipment Rental Rates. Unless otherwise agreed in writing, the CONTRACTOR will be paid for the use of equipment at the rental rate listed for such equipment specified in the current edition of the following reference publication: "Rental Rate Blue Book" as published by Dataquest (a company of the Dunn and Bradstreet Corporation), 1290 Ridder Park Drive, San Jose, CA 95131, telephone number (800) 227-8444.

E. Equipment on the Work Site. The rental time to be paid for equipment on the work site shall be the time the equipment is in productive operation on the extra work being performed and, in addition, shall include the time required to move the equipment to the location of the extra work and return it to the original location or to another location requiring no more time than that required to return it to its original location; except, that moving time will not be paid if the equipment is used on other than the extra work, even though located at the site of the extra work. Loading and transporting costs will be allowed, in lieu of moving time, when the equipment is moved by means other than its own power, except that no payment will be made for loading and transporting costs when the equipment is used at the site of the extra work on other than the extra work. The following shall be used in computing the rental time of equipment on the work site.

1. When hourly rates are listed, any part of an hour less than 30 minutes of operation shall be considered to be 1/2-hour of operation, and any part of an hour in excess of 30 minutes will be considered one hour of operation.
2. When daily rates are listed, any part of a day less than 4 hours operation shall be considered to be 1/2-day of operation. When owner-operated equipment is used to perform extra work to be paid for on a time and materials basis, the CONTRACTOR will be paid for the equipment and operator, as set forth in Paragraphs (3), (4), and (5), following.
3. Payment for the equipment will be made in accordance with the provisions in Paragraph 11.3D, herein.
4. Payment for the cost of labor and subsistence or travel allowance will be made at the rates paid by the CONTRACTOR to other workers operating similar equipment already

on the work site, or in the absence of such labor, established by collective bargaining agreements for the type of worker and location of the extra work, whether or not the operator is actually covered by such an agreement. A labor surcharge will be added to the cost of labor described herein in accordance with the provisions of Paragraph 11.3B, herein, which surcharge shall constitute full compensation for payments imposed by state and federal laws and all other payments made to or on behalf of workers other than actual wages.

5. To the direct cost of equipment rental and labor, computed as provided herein, will be added the allowances for equipment rental and labor as provided in Paragraph 11.4, herein.

F. Specialty Work. Specialty work is defined as that work characterized by extraordinary complexity, sophistication, or innovation or a combination of the foregoing attributes which are unique to the construction industry. The following shall apply in making estimates for payment for specialty work:

1. Any bid item of WORK to be classified as Specialty Work shall be listed as such in the Supplementary General Conditions. Specialty work shall be performed by an entity especially skilled in the work to be performed. After validation of invoices and determination of market values by the ENGINEER, invoices for specialty work based upon the current fair market value thereof may be accepted without complete itemization of labor, material, and equipment rental costs.
2. When the CONTRACTOR is required to perform work necessitating special fabrication or machining process in a fabrication or a machine shop facility away from the job site, the charges for that portion of the work performed at the off-site facility may, by agreement, be accepted as specialty work and accordingly, the invoices for the work may be accepted without detailed itemization.
3. All invoices for specialty work will be adjusted by deducting all trade discounts offered or available, whether the discounts were taken or not. In lieu of the allowances for overhead and profit specified in Paragraph 11.4, herein, an allowance of 5 percent will be added to invoices for specialty work.

G. Sureties. All work performed hereunder shall be subject to all of the provisions of the Contract Documents and the CONTRACTOR's sureties shall be bound with reference thereto as under the original Agreement. Copies of all amendments to surety bonds or supplemental surety bonds shall be submitted to the OWNER for review prior to the performance of any work hereunder.

11.4 CONTRACTOR'S FEE

A. Extra work ordered on the basis of time and materials will be paid for at the actual necessary cost as determined by the ENGINEER, plus allowances for overhead and profit. The allowance for overhead and profit shall include full compensation for superintendence, bond and insurance premiums, taxes, field office expense, extended overhead, home office overhead, and all other items of expense or cost not included in the cost of labor, materials, or equipment provided for under Paragraph 11.3. The allowance for overhead and profit will be made in accordance with the following schedule:

Actual Overhead and Profit Allowance

Labor	15 percent
Materials	10 percent
Equipment	10 percent

To the sum of the costs and mark-ups provided for in this Article, one percent shall be added as compensation for bonding.

B. It is understood that labor, materials, and equipment may be furnished by the CONTRACTOR or by the Subcontractor on behalf of the CONTRACTOR. When all or any part of the extra work is performed by a Subcontractor, the allowance specified herein shall be applied to the labor, materials, and equipment costs of the Subcontractor, to which the CONTRACTOR may add 5 percent of the Subcontractor's total cost for the extra work. Regardless of the number of hierarchical tiers of Subcontractors, the 5 percent increase above the Subcontractor's total cost which includes the allowances for overhead and profit specified herein may be applied one time only.

11.5 EXCLUDED COSTS. The term "Cost of the Work" shall not include any of the following:

A. Payroll costs and other compensation of CONTRACTOR's officers, executives, principals (of partnership and sole proprietorships), general managers, engineers, estimators, attorneys' auditors, accountants, purchasing and contracting agents, expenditures, timekeepers, clerks and other personnel employed by CONTRACTOR whether at the site or in CONTRACTOR's principal or a branch office for general administration of the work, or not specifically covered by paragraph 11.3, all of which are to be considered administrative costs covered by the CONTRACTOR's fee.

B. Expenses of CONTRACTOR's principal and branch offices other than CONTRACTOR's office at the site.

C. Any part of CONTRACTOR's capital expenses, including interest on CONTRACTOR's capital employed for the WORK and charges against CONTRACTOR for delinquent payments.

D. Cost of premiums for all bonds and for all insurance whether or not CONTRACTOR is required by the Contract Documents to purchase and maintain the same (except for the cost of premiums covered by paragraph 11.4 above).

E. Costs due to the negligence of CONTRACTOR , any Subcontractor, or anyone directly or indirectly employed by any of them or for whose acts any of them may be liable, including but not limited to, the correction of Defective WORK, disposal of materials or equipment wrongly supplied and making good any damage to property.

F. Other overhead or general expense costs of any kind and the cost of any item not specifically and expressly included in paragraph 11.4.

ARTICLE 12 CHANGE OF CONTRACT TIME

12.1 GENERAL

A. The Contract Time may only be changed by a Change Order. Any claim for an extension of the Contract Time (or Milestones) shall be based on written notice delivered by the CONTRACTOR to the ENGINEER promptly (but in no event later than 30 days) after the occurrence of the event giving rise to the claim and stating the general nature of the claim. Notice of the extent of the claim with supporting data shall be delivered within 60 days after such occurrence (unless the ENGINEER allows an additional period of time to ascertain more accurate data in support of the claim) and shall be accompanied by the CONTRACTOR's written statement that the adjustment claimed is the entire adjustment to which the CONTRACTOR has reason to believe it is entitled as a result of the occurrence of said event. All claims for adjustment in the Contract Time shall be determined by the ENGINEER in accordance with Paragraph 9.8 if the OWNER and the CONTRACTOR cannot otherwise agree. No claim for an adjustment in the Contract Time will be valid if not submitted in accordance with the requirements of this Paragraph 12.1A. An increase in Contract Time does not mean that the Contractor is due an increase in Contract Price. Only compensable time extensions will result in an increase in Contract Price.

B. All time limits stated in the Contract Documents are of the essence of the Agreement.

C. Where CONTRACTOR is prevented from completing any part of the WORK within the Contract Times (or Milestones) due to delay beyond the control of CONTRACTOR, the Contract Times (or Milestones) will be extended in an amount equal to the time lost on the critical path of the project due to such delay if a claim is made therefor as provided in paragraph 12.1. Delays beyond the control of CONTRACTOR shall include, but not be limited to, acts or neglect by OWNER, acts or neglect of utility owners or other contractors performing other work as contemplated by Article 7, fires, floods, epidemics, unprecedented weather conditions or acts of God. Delays attributable to and within the control of a Subcontractor or Supplier shall be deemed to be delays within the control of CONTRACTOR.

D. Where CONTRACTOR is prevented from completing any part of the WORK within the Contract Times (or Milestones) due to delay beyond the control of both OWNER and CONTRACTOR, an extension of the Contract Times (or Milestones) in an amount equal to the time lost on the critical path of the project due to such delay shall be CONTRACTOR's sole and exclusive remedy for such delay. In no event shall the OWNER be liable to CONTRACTOR, any Subcontractor, any Supplier, or any other person or organization, or to any surety for or employee or agent of any of them, for damages arising out of or resulting from (i) delays caused by or within the control of CONTRACTOR, or (ii) delays beyond the control of both parties including but not limited to fires, floods, epidemics abnormal weather conditions, acts of God or acts or neglect by utility owners or other contractors performing other work as contemplated by Article 7.

12.2 EXTENSIONS OF TIME FOR DELAY DUE TO WEATHER. Contract Time may be extended by the ENGINEER because of delays in completion of the WORK due to unusually severe weather, provided that the CONTRACTOR shall, within 10 days of the beginning of any such delay, notify the ENGINEER in writing of the cause of delay and request an extension of Contract Time. The

ENGINEER will ascertain the facts and the extent of the delay and extend the time for completing the work when, in the ENGINEER's judgment, the findings of fact justify such an extension. Unprecedented, abnormal, or unusually severe weather will be defined as an event, or events, with a greater than 50-year recurrence interval, as determined by the National Weather Service, or equivalent State or Federal agency

ARTICLE 13 WARRANTY AND GUARANTEE; TESTS AND INSPECTIONS; CORRECTION, REMOVAL, OR ACCEPTANCE OF DEFECTIVE WORK

13.1 WARRANTY AND GUARANTEE. The CONTRACTOR warrants and guarantees to the OWNER and the ENGINEER that all work will be in accordance with the Contract Documents and will not be defective. Prompt notice of defects known to the OWNER or ENGINEER shall be given to the CONTRACTOR. All defective work, whether or not in place, may be rejected, corrected, or accepted as provided in this Article 13.

13.2 ACCESS TO WORK. OWNER, ENGINEER, their Consultants, sub-consultants, other representatives and personnel of OWNER, independent testing laboratories and governmental agencies with jurisdictional interests will have access to the WORK at reasonable times for their observation, inspecting and testing. CONTRACTOR shall provide them proper and safe conditions for such access and advise them of CONTRACTOR's site safety procedures and programs so that they may comply therewith as applicable.

13.3 TESTS AND INSPECTIONS

A. The CONTRACTOR shall give the ENGINEER timely notice of readiness of the WORK for all required inspections, tests, or approvals, and shall cooperate with inspection and testing personnel to facilitate required inspections or tests.

B. If Laws or Regulations of any public body having jurisdiction other than the OWNER require any WORK to specifically be inspected, tested, or approved, the CONTRACTOR shall pay all costs in connection therewith. The CONTRACTOR shall also be responsible for and shall pay all costs in connection with any inspection or testing required in connection with the OWNER's or the ENGINEER's acceptance of a Supplier of materials or equipment proposed as a substitution or (or-equal) to be incorporated in the WORK, or of materials or equipment submitted for review prior to the CONTRACTOR's purchase thereof for incorporation in the WORK. The cost of all inspections, tests, and approvals in addition to the above which are required by the Contract Documents shall be paid by the OWNER (unless otherwise specified).

C. The ENGINEER will make, or have made, such inspections and tests as the ENGINEER deems necessary to see that the WORK is being accomplished in accordance with the requirements of the Contract Documents. Unless otherwise specified in the Supplementary General Conditions, the cost of such inspection and testing will be borne by the OWNER. In the event such inspections or tests reveal non-compliance with the requirements of the Contract Documents, the CONTRACTOR shall bear the cost of corrective measures deemed necessary by the ENGINEER, as well as the cost of subsequent reinspection and retesting. Neither observations by the ENGINEER nor inspections, tests, or approvals by others shall relieve the CONTRACTOR from the CONTRACTOR's obligation to perform the WORK in accordance with the Contract Documents.

D. All inspections, tests, or approvals other than those required by Laws or Regulations of any public body having jurisdiction shall be performed by organizations acceptable to the ENGINEER and the CONTRACTOR.

E. If any WORK (including the work of others) that is to be inspected, tested, or approved is covered without written concurrence of the ENGINEER, it must, if requested by the ENGINEER, be uncovered for observation. Such uncovering shall be at the CONTRACTOR's expense unless the CONTRACTOR has given the ENGINEER timely notice of the CONTRACTOR's intention to perform such test or to cover the same and the ENGINEER has not acted with reasonable promptness in response to such notice.

F. If any WORK is covered contrary to the written request of the ENGINEER, it must, if requested by the ENGINEER, be uncovered for the ENGINEER's observation and recovered at the CONTRACTOR's expense.

G. If the ENGINEER considers it necessary or advisable that covered WORK be observed by the ENGINEER or inspected or tested by others, the CONTRACTOR, at the ENGINEER's request, shall uncover, expose, or otherwise make available for observation, inspection, or testing as the ENGINEER may require, that portion of the WORK in question, furnishing all necessary labor, material, and equipment. If it is found that such WORK is defective, the CONTRACTOR shall bear all direct, indirect, and consequential costs and damages of such uncovering, exposure, observation, inspection, and testing and of satisfactory reconstruction, including but not limited to fees and charges of engineers, attorneys, and other professionals. However, if such WORK is not found to be defective, the CONTRACTOR shall be allowed an increase in the Contract Price or an extension of the Contract Time, or both, directly attributable to such uncovering, exposure, observation, inspection, testing, and reconstruction; and, if the parties are unable to agree as to the amount or extent thereof, the CONTRACTOR may make a claim therefor as provided in Articles 11 and 12.

13.4 OWNER MAY STOP THE WORK. If the WORK is defective, or the CONTRACTOR fails to perform work in such a way that the completed WORK will conform to the Contract Documents, the OWNER may order the CONTRACTOR to stop the WORK, or any portion thereof, until the cause for such order has been eliminated; however, this right of the OWNER to stop the WORK shall not give rise to any duty on the part of the OWNER to exercise this right for the benefit of the CONTRACTOR or any other party.

13.5 CORRECTION OR REMOVAL OF DEFECTIVE WORK. If required by the ENGINEER, the CONTRACTOR shall promptly, either correct all defective work, whether or not fabricated, installed, or completed, or, if the WORK has been rejected by the ENGINEER, remove it from the site and replace it with non-defective work. The CONTRACTOR shall bear all direct, indirect and consequential costs and damages of such correction or removal, including but not limited to fees and charges of engineers, attorneys, and other professionals made necessary thereby.

13.6 ONE YEAR CORRECTION PERIOD

A. If within one year after the date of Substantial Completion or such longer period of time as may be prescribed by Laws or Regulations or by the terms of any applicable special guarantee required by the Contract Documents or by any specific provision of the Contract Documents, any work is found to be defective, the CONTRACTOR shall promptly, without cost to the OWNER and in accordance with OWNER's written notification, (i) correct such Defective WORK, or, if it has been rejected by the OWNER, remove it from the site and replace it with non-defective work, and (ii) satisfactorily correct or remove and replace any damage to other work of others resulting therefrom. If the CONTRACTOR does not promptly comply with such notification, or in an emergency where delay would cause serious risk of loss or damage, the OWNER may have the Defective WORK corrected or the rejected WORK removed and replaced, and all direct, indirect, and consequential costs and damages of such removal and replacement including but not limited to fees and charges of engineers, attorneys and other professionals will be paid by the CONTRACTOR.

B. Where Defective WORK (and damage to other WORK resulting therefrom) has been corrected, removed or replaced under this paragraph 13.6, the correction period hereunder with respect to such WORK will be extended for an additional period of one year after such correction or removal and replacement has been satisfactorily completed.

13.7 ACCEPTANCE OF DEFECTIVE WORK. If, instead of requiring correction or removal and replacement of defective work, the OWNER prefers to accept the WORK, the OWNER may do so. The CONTRACTOR shall bear all direct, indirect, and consequential costs attributable to the OWNER's evaluation of and determination to accept such defective work. If any such acceptance occurs prior to final payment, a Change Order will be issued incorporating the necessary revisions in the Contract Documents with respect to the WORK, and the OWNER shall be entitled to an appropriate decrease in the Contract Price.

ARTICLE 14 PAYMENTS TO CONTRACTOR AND COMPLETION

14.1 SCHEDULE OF VALUES (LUMP SUM PRICE BREAKDOWN). The schedule of values or lump sum price breakdown established as provided in the General Requirements shall serve as the basis for progress payments and will be incorporated into a form of Application for Payment acceptable to the ENGINEER.

14.2 UNIT PRICE BID SCHEDULE. Progress payments on account of Unit Price work will be based on the number of units completed.

14.3 APPLICATION FOR PROGRESS PAYMENT

A. Unless otherwise prescribed by law, on the 25th of each month, the CONTRACTOR shall submit to the ENGINEER for review, an Application for Payment filled out and signed by the CONTRACTOR covering the WORK completed as of the date of the Application and accompanied by such supporting documentation as is required by the Contract Documents.

B. The Application for Payment shall identify, as a sub-total, the amount of the CONTRACTOR'S Total Earnings to Date, plus the Value of Materials Stored at the Site which have not yet been incorporated in the WORK, and less a deductive adjustment for

materials installed which were not previously incorporated in the WORK, but for which payment was allowed under the provisions for payment for Materials Stored at the Site, but not yet incorporated in the WORK.

C. The Net Payment Due the CONTRACTOR shall be the above-mentioned subtotal from which shall be deducted the total amount of all previous payments made to the CONTRACTOR. Progress payments will be paid in full in accordance with Article 14 of the General Conditions until 90% of the Contract Price has been paid. The remaining 10% of the Contract Price amount may be withheld until:

1. final inspection has been made;
2. completion of the Project; and
3. acceptance of the Project by the OWNER.

D. The Value of Materials Stored at the Site shall be an amount equal to the specified percent of the value of such materials as set forth in the Supplementary General Conditions. Said amount shall be based upon the value of all acceptable materials and equipment not incorporated in the WORK but delivered and suitably stored at the site or at another location agreed to in writing; provided, each such individual item has a value of more than $5,000.00 and will become a permanent part of the WORK. The Application for Payment shall also be accompanied by an invoice (including shipping), a certification that the materials meet the applicable contract specifications, and any evidence required by the OWNER that the materials and equipment are covered by appropriate property insurance and other arrangements to protect the OWNER's interest therein, all of which will be satisfactory to the OWNER. Payment for materials will not constitute final acceptance. It shall be the CONTRACTOR’s responsibility to protect the material from damage, theft, loss, or peril while in storage. Unless otherwise prescribed by law, the Value of Materials Stored at the Site shall be paid at the invoice amount up to a maximum of 85% of the Contract Price for those items.

14.4 CONTRACTOR'S WARRANTY OF TITLE. The CONTRACTOR warrants and guarantees that title to all work, materials, and equipment covered by an Application for Payment, whether incorporated in the WORK or not, will pass to the OWNER no later than the time of payment free and clear of all liens.

14.5 REVIEW OF APPLICATIONS FOR PROGRESS PAYMENT

A. The ENGINEER will, within 7 days after receipt of each Application for Payment, either indicate in writing a recommendation of payment and present the Application to the OWNER, or return the Application to the CONTRACTOR indicating in writing the ENGINEER's reasons for refusing to recommend payment. In the later case, the CONTRACTOR may make the necessary corrections and resubmit the Application. If the ENGINEER still disagrees with a portion of the Application, it will submit the Application recommending the undisputed portion of the Application to the OWNER for payment and provide reasons for recommending non-payment of the disputed amount. Thirty days after presentation of the Application for Payment with the ENGINEER's recommendation, the amount recommended will (subject to the provisions of Paragraph 14.5B) become due and when due will be paid by the OWNER to the CONTRACTOR.

B. The OWNER may refuse to make payment of the full amount recommended by the ENGINEER because claims have been made against the OWNER on account of the CONTRACTOR's performance of the WORK or Liens have been filed in connection with the WORK or there are other items entitling the OWNER to a credit against the amount recommended, but the OWNER must give the CONTRACTOR written notice within 7 days (with a copy to the ENGINEER) stating the reasons for such action.

14.6 PARTIAL UTILIZATION

A. The OWNER shall have the right to utilize or place into service any item of equipment or other usable portion of the WORK prior to completion of the WORK. Whenever the OWNER plans to exercise said right, the CONTRACTOR will be notified in writing by the OWNER, identifying the specific portion or portions of the WORK to be so utilized or otherwise placed into service.

B. It shall be understood by the CONTRACTOR that until such written notification is issued, all responsibility for care and maintenance of all of the WORK shall be borne by the CONTRACTOR. Upon issuance of said written notice of partial utilization, the OWNER will accept responsibility for the protection and maintenance of all such items or portions of the WORK described in the written notice.

C. The CONTRACTOR shall retain full responsibility for satisfactory completion of the WORK, regardless of whether a portion thereof has been partially utilized by the OWNER and the CONTRACTOR's one year correction period shall commence only after the date of Substantial Completion for the WORK.

14.7 SUBSTANTIAL COMPLETION. When the CONTRACTOR considers the WORK ready for its intended use the CONTRACTOR shall notify the OWNER and the ENGINEER in writing that the WORK is substantially complete. The CONTRACTOR will attach to this request a list of all work items that remain to be completed and a request that the ENGINEER prepare a Notice of Completion. Within a reasonable time thereafter, the OWNER, the CONTRACTOR, and the ENGINEER shall make an inspection of the WORK to determine the status of completion. If the ENGINEER does not consider the WORK substantially complete, or the list of remaining work items to be comprehensive, the ENGINEER will notify the CONTRACTOR in writing giving the reasons therefor. If the ENGINEER considers the WORK substantially complete, the ENGINEER will prepare and deliver to the OWNER, for its execution and recording, the Notice of Completion signed by the ENGINEER and CONTRACTOR, which shall fix the date of Substantial Completion.

14.8 FINAL APPLICATION FOR PAYMENT. After the CONTRACTOR has completed all of the remaining work items referred to in Paragraph 14.7 and delivered all maintenance and operating instructions, schedules, guarantees, Bonds, certificates of inspection, record as-built documents (as provided in the General Requirements) and other documents, all as required by the Contract Documents, and after the ENGINEER has indicated that the WORK is acceptable, the CONTRACTOR may make application for final payment following the procedure for progress payments. The final Application for Payment shall be accompanied by all documentation called for in the Contract Documents, together with complete and legally effective releases or waivers (satisfactory to the OWNER) of all liens arising out of or filed in connection with the WORK.

14.9 FINAL PAYMENT AND ACCEPTANCE

A. If, on the basis of the ENGINEER's observation of the WORK during construction and final inspection, and the ENGINEER's review of the final Application for Payment and accompanying documentation, all as required by the Contract Documents, the ENGINEER is satisfied that the WORK has been completed and the CONTRACTOR's other obligations under the Contract Documents have been fulfilled, the ENGINEER will, within 14 days after receipt of the final Application for Payment, indicate in writing the ENGINEER's recommendation of payment and present the Application to the OWNER for payment.

B. After acceptance of the WORK by the OWNER's governing body, the OWNER will make final payment to the CONTRACTOR of the amount remaining after deducting all prior payments and all amounts to be kept or retained under the provisions of the Contract Documents, including the following items:

1. Liquidated damages, as applicable.
2. Two times the value of outstanding items of correction work or punch list items yet uncompleted or uncorrected, as applicable. All such work shall be completed or corrected to the satisfaction of the OWNER within the time stated on the Notice of Completion, otherwise the CONTRACTOR does hereby waive any and all claims to all monies withheld by the OWNER to cover the value of all such uncompleted or uncorrected items.

14.10 RELEASE OF RETAINAGE AND OTHER DEDUCTIONS

A. After executing the necessary documents to initiate the lien period, and not more than 45 days thereafter (based on a 30-day lien filing period and 15-day processing time), the OWNER will release to the CONTRACTOR the retainage funds withheld pursuant to the Agreement, less any deductions to cover pending claims against the OWNER pursuant to Paragraph 14.5B.

B. After filing of the necessary documents to initiate the lien period, the CONTRACTOR shall have 30 days to complete any outstanding items of correction work remaining to be completed or corrected as listed on a final punch list made a part of the Notice of Completion. Upon expiration of the 45 days, referred to in Paragraph 14.10A, the amounts withheld pursuant to the provisions of Paragraph 14.9B herein, for all remaining work items will be returned to the CONTRACTOR; provided, that said work has been completed or corrected to the satisfaction of the OWNER within said 30 days. Otherwise, the CONTRACTOR does hereby waive any and all claims for all monies withheld by the OWNER under the Contract to cover 2 times the value of such remaining uncompleted or uncorrected items.

14.11 CONTRACTOR'S CONTINUING OBLIGATION. The CONTRACTOR's obligation to perform and complete the WORK in accordance with the Contract Documents shall be absolute. Neither recommendation of any progress or final payment by the ENGINEER, nor the issuance of a Notice of Completion, nor any payment by the OWNER to the CONTRACTOR under the Contract Documents, nor any use or occupancy of the WORK or any part thereof by the OWNER, nor any act of acceptance by the OWNER nor any failure to do so, nor any review of a Shop Drawing or sample submittal, will constitute an acceptance of work not in accordance with the Contract Documents or a release of the CONTRACTOR's obligation to perform the WORK in accordance with the Contract Documents.

14.12 FINAL PAYMENT TERMINATES LIABILITY OF OWNER. Final payment is defined as the last progress payment made to the CONTRACTOR for earned funds, less monies withheld as applicable, pursuant to Paragraph 14.10A. The acceptance by the CONTRACTOR of the final payment referred to in Paragraph 14.9 herein, shall be a release of the OWNER and its agents from all claims of liability to the CONTRACTOR for anything done or furnished for, or relating to, the WORK or for any act of neglect of the OWNER or of any person relating to or affecting the WORK, except demands against the OWNER for the remainder, if any, of the amounts kept or retained under the provisions of Paragraph 14.9 herein; and excepting pending, unresolved claims filed prior to the date of the Notice of Completion.

ARTICLE 15 SUSPENSION OF WORK AND TERMINATION

15.1 SUSPENSION OF WORK BY OWNER. The OWNER, acting through the ENGINEER, may, at any time and without cause, suspend the WORK or any portion thereof for a period of not more than 90 days by notice in writing to the CONTRACTOR. The CONTRACTOR shall resume the WORK on receipt from the ENGINEER of a notice of resumption of work. The CONTRACTOR shall be allowed an increase in the Contract Price or an extension of the Contract Time, or both, directly attributable to any suspension if the CONTRACTOR makes an approved claim therefor as provided in Articles 11 and 12.

15.2 TERMINATION OF AGREEMENT BY OWNER (CONTRACTOR DEFAULT)

A. In the event of default by the CONTRACTOR, the OWNER may give 10 days written notice to the CONTRACTOR of OWNER's intent to terminate the Agreement and provide the CONTRACTOR an opportunity to remedy the conditions constituting the default. It shall be considered a default by the CONTRACTOR whenever CONTRACTOR shall: (1) declare bankruptcy, become insolvent, or assign its assets for the benefit of its creditors; (2) fail to provide materials or quality of work meeting the requirements of the Contract Documents; (3) disregard or violate provisions of the Contract Documents or ENGINEER's instructions; (4) fail to prosecute the WORK according to the approved progress schedule; or, (5) fail to provide a qualified superintendent, competent workers, or materials or equipment meeting the requirements of the Contract Documents. If the CONTRACTOR fails to remedy the conditions constituting default within the time allowed, the OWNER may then issue the Notice of Termination.

B. In the event the Agreement is terminated in accordance with Paragraph 15.2A, herein, the OWNER may take possession of the WORK and may complete the WORK by whatever method or means the OWNER may select. The cost of completing the WORK shall be deducted from the balance which would have been due the CONTRACTOR had the Agreement not been terminated and the WORK completed in accordance with the Contract Documents. If such cost exceeds the balance which would have been due, the CONTRACTOR shall pay the excess amount to the OWNER. If such cost is less than the balance which would have been due, the CONTRACTOR shall not have claim to the difference.

15.3 TERMINATION OF AGREEMENT BY OWNER (FOR CONVENIENCE). The OWNER may terminate the Agreement at any time if it is found that reasons beyond the control of either the OWNER or CONTRACTOR make it impossible or against the OWNER's interests to complete the WORK. In such a case, the CONTRACTOR shall have no claims against the OWNER except: (1) for

the value of work performed up to the date the Agreement is terminated; and, (2) for the cost of materials and equipment on hand, in transit, or on definite commitment, as of the date the Agreement is terminated which would be needed in the WORK and which meet the requirements of the Contract Documents. The value of work performed and the cost of materials and equipment delivered to the site, as mentioned above, shall be determined by the ENGINEER in accordance with the procedure prescribed for the making of the final application for payment and payment under Paragraphs 14.8 and 14.9.

15.4 TERMINATION OF AGREEMENT BY CONTRACTOR. The CONTRACTOR may terminate the Agreement upon 10 days written notice to the OWNER, whenever: 1) the WORK has been suspended under the provisions of Paragraph 15.1, herein, for more than 90 consecutive days through no fault or negligence of the CONTRACTOR, and notice to resume work or to terminate the Agreement has not been received from the OWNER within this time period; or, 2) the OWNER should fail to pay the CONTRACTOR any monies due him in accordance with the terms of the Contract Documents and within 60 days after presentation to the OWNER by the CONTRACTOR of a request therefor, unless within said 10-day period the OWNER shall have remedied the condition upon which the payment delay was based. In the event of such termination, the CONTRACTOR shall have no claims against the OWNER except for those claims specifically enumerated in Paragraph 15.3, herein, and as determined in accordance with the requirements of said paragraph.

ARTICLE 16 MISCELLANEOUS

16.1 GIVING NOTICE. Whenever any provision of the Contract Documents requires the giving of written notice, it will be deemed to have been validly given if delivered in person to the individual or to a member of the firm or to an officer of the corporation for whom it is intended, or if delivered at or sent by registered or certified mail, postage prepaid, to the last business address known to the giver of the notice.

16.2 RIGHTS IN AND USE OF MATERIALS FOUND ON THE WORK

A. The CONTRACTOR may use on the Project, with ENGINEER's approval, such stone, gravel, sand, or other material determined suitable by the ENGINEER, as may be found in the excavation. The CONTRACTOR will be paid for the excavation of such material at the corresponding contract unit price. No additional payment will be made for utilizing the material from excavation as borrow, or select borrow.

B. The CONTRACTOR shall replace, at its own expense, with other acceptable material, all of that portion of the excavated material so removed and used which was needed for use on the project. No charge for the materials so used will be made against the CONTRACTOR except that the CONTRACTOR shall be responsible for payment of any royalties required.

C. The CONTRACTOR shall not excavate or remove any material from within the Project location which is not within the grading limits, as indicated by the slope and grade lines, without written authorization from the ENGINEER.

D. In the event the CONTRACTOR has processed materials from OWNER-furnished sources in excess of the quantities required for performance of this contract, including any waste material produced as a by-product, the CBJ may retain possession of such materials without obligation to reimburse the CONTRACTOR for the cost of their production. When such

materials are in a stockpile, the ENGINEER may require: That it remain in stockpile; the CONTRACTOR level such stockpile(s); or that the CONTRACTOR remove such materials and restore the premises to a satisfactory condition at the CONTRACTOR's expense. This provision shall not preclude the CBJ from arranging with the CONTRACTOR to produce material over and above the contract needs, payment for which shall be by written agreement between the CBJ and the CONTRACTOR.

E. Unless otherwise provided, the material from any existing old structure may be used temporarily by the CONTRACTOR in the erection of the new structure. Such material shall not be cut or otherwise damaged except with the approval of the ENGINEER.

16.3 RIGHT TO AUDIT. If the CONTRACTOR submits a claim to the OWNER for additional compensation, the OWNER shall have the right, as a condition to considering the claim, and as a basis for evaluation of the claim, and until the claim has been settled, to audit the CONTRACTOR's books to the extent they are relevant. This right shall include the right to examine books, records, documents, and other evidence and accounting procedures and practices, sufficient to discover and verify all direct and indirect costs of whatever nature claimed to have been incurred or anticipated to be incurred and for which the claim has been submitted. The right to audit shall include the right to inspect the CONTRACTOR's plants, or such parts thereof, as may be or have been engaged in the performance of the WORK. The CONTRACTOR further agrees that the right to audit encompasses all subcontracts and is binding upon Subcontractors. The rights to examine and inspect herein provided for shall be exercisable through such representatives as the OWNER deems desirable during the CONTRACTOR's normal business hours at the office of the CONTRACTOR. The CONTRACTOR shall make available to the OWNER for auditing, all relevant accounting records and documents, and other financial data, and upon request, shall submit true copies of requested records to the OWNER.

16.4 ARCHEOLOGICAL OR HISTORICAL DISCOVERIES. When the CONTRACTOR's operation encounters prehistoric artifacts, burials, remains of dwelling sites, paleontological remains, such as shell heaps, land or sea mammal bones or tusks, or other items of historical significance, the CONTRACTOR shall cease operations immediately and notify the ENGINEER. No artifacts or specimens shall be further disturbed or removed from the ground and no further operations shall be performed at the site until so directed. Should the ENGINEER order suspension of the CONTRACTOR's operations in order to protect an archaeological or historical finding, or order the CONTRACTOR to perform extra work, such order(s) shall be covered by an appropriate contract change document.

16.5 CONSTRUCTION OVER OR ADJACENT TO NAVIGABLE WATERS. All work over, on, or adjacent to navigable waters shall be so conducted that free navigation of the waterways will not be interfered with and the existing navigable depths will not be impaired, except as allowed by permit issued the U.S. Coast Guard and/or the U.S. Army Corps of Engineers, as applicable.

16.6 GRATUITY AND CONFLICT OF INTEREST. The CONTRACTOR agrees to not extend any loan, gratuity or gift of money of any form whatsoever to any employee or elected official of the OWNER, nor will the CONTRACTOR rent or purchase any equipment or materials from any employee or elected official of the OWNER, or to the best of the CONTRACTOR’s knowledge, from any agent of any employee or elected official of the OWNER. Before final payment, the CONTRACTOR shall execute and furnish the OWNER an affidavit certifying that the CONTRACTOR has complied with the above provisions of the contract.

16.7 SUITS OF LAW CONCERNING THE WORK

A. Should a suit of law be entered into, either by the CONTRACTOR (or the CONTRACTOR's surety) against the OWNER, or by the OWNER against the CONTRACTOR (or the CONTRACTOR's surety), the suit of law shall be tried in the First Judicial District of Alaska.

B. If one of the questions at issue is the satisfactory performance of the work by the CONTRACTOR and should the appropriate court of law judge the work of the CONTRACTOR to be unsatisfactory, then the CONTRACTOR (or the CONTRACTOR's surety) shall reimburse the OWNER for all legal and all other expenses (as may be allowed and set by the court) incurred by the OWNER because of the suit of the law and, further, it is agreed that the OWNER may deduct such expense from any sum or sums then, or any that become due the CONTRACTOR under the contract.

16.8 CERTIFIED PAYROLLS

A. All CONTRACTORs or Subcontractor who perform work on a public construction contract for the OWNER shall file a certified payroll with the Alaska Department of Labor before Friday of each week that covers the preceding week (Section 14-2-4 ACLA 1949; am Section 4 ch 142 SLA 1972).

B. In lieu of submitting the State payroll form, the CONTRACTOR's standard payroll form may be submitted, provided it contains the information required by AS 36.05.040 and a statement that the CONTRACTOR is complying with AS 36.10.010.

C. A contractor or subcontractor, who performs work on public construction in the State, as defined by AS 36.95.010(3), shall pay not less than the current prevailing rate of wages as issued by the Alaska Department of Labor before the end of the pay period. (AS 36.05.010).

16.9 PREVAILING WAGE RATES

A. Wage rates for Laborers and Mechanics on Public Contracts, AS 36.05.070. The CONTRACTOR, or Subcontractors, shall pay all employees unconditionally and not less than once a week. Wages may not be less than those stated in Paragraph 16.8C, regardless of the contractual relationship between the CONTRACTOR or Subcontractors and laborers, mechanics, or field surveyors. The scale of wages to be paid shall be posted by the CONTRACTOR in a prominent, easily accessible place at the site of the WORK.

B. Failure to Pay Agreed Wages, AS 36.05.080. If it is found that a laborer, mechanic, or field surveyor employed by the CONTRACTOR or Subcontractor has been, or is being, paid a rate or wages less than the established rate, the OWNER may, by written notice, terminate the CONTRACTOR or Subcontractors right to proceed with the work. The OWNER may prosecute the work to completion by contract or otherwise, and the CONTRACTOR and sureties will be held liable to the OWNER for excess costs for completing the WORK. (Section 2 ch 52 SLA 1959).

C. Listing Contractor's Who Violate Contracts, AS 36.05.090. In addition, a list giving the names of persons who have disregarded the rights of their employees shall be distributed to all departments of State government and all political subdivisions. No person appearing on this

list, and no firm, corporation, partnership or association in which the person has an interest, may work as a CONTRACTOR or Subcontractor on a public construction contract for the State, or a political subdivision of the state, until three years after the date of publication of the list. (Section 3 ch 52 SLA 1959; am Section 9 ch 142 SLA).

16.10 EMPLOYMENT REFERENCE. Workers employed in the execution of the contract by the CONTRACTOR or by any Subcontractor under this contract shall not be required or permitted to labor more than 8 hours a day or 40 hours per week in violation of the provisions of the Alaska Wage and Hour Act, Section 23.10.060.

16.11 COST REDUCTION INCENTIVE

A. At any time within 45 days after the date of the Notice of Award, the CONTRACTOR may submit to the ENGINEER in writing, proposals for modifying the plans, specifications, or other requirements of this contract for the sole purpose of reducing the total cost of construction. The cost reduction proposal shall not impair in any manner the essential functions or characteristics of the project, including but not limited to, service life, economy of operation, ease of maintenance, desired appearance or design and safety standards.

B. The cost reduction proposal shall contain the following information:

1. Description of both the existing contract requirements for performing the WORK and the proposed changes.
2. An itemization of the contract requirements that must be changed if the proposal is adopted.
3. A detailed estimate of the time required and the cost of performing the WORK under both the existing contract and the proposed change.
4. A statement of the date by which the CONTRACTOR must receive the decision from the OWNER on the cost reduction proposal.
5. The contract items of WORK effected by the proposed changes including any quantity variations.
6. A description and estimate of costs the OWNER may incur in implementing the proposed changes, such as test and evaluation and operating and support costs.
7. A prediction of any effects the proposed change would have on future operations and maintenance costs to the OWNER.

C. The provisions of this section shall not be construed to require the OWNER to consider any cost reduction proposal which may be submitted; nor will the OWNER be liable to the CONTRACTOR for failure to accept or act upon any cost reduction proposal submitted, or for delays to the work attributable to the consideration or implementation of any such proposal.

D. If a cost reduction proposal is similar to a change in the plans or specifications for the project under consideration by the OWNER at the time the proposal is submitted, the OWNER will not accept such proposal and reserves the right to make such changes without compensation to the CONTRACTOR under the provisions of this section.

E. The CONTRACTOR shall continue to perform the work in accordance with the requirements of the contract until an executed Change Order incorporating the cost reduction proposal has

been issued. If any executed Change Order has not been issued by the date upon which the CONTRACTOR's cost reduction proposal specifies that a decision should be made by the OWNER, in writing, the cost reduction proposal shall be considered rejected.

F. The OWNER, shall be the sole judge of the acceptability of a cost reduction proposal and of the estimated net savings in Contract Time and construction costs resulting from the adoption of all or any part of such proposal. Should the CONTRACTOR disagree with OWNER's decision on the cost reduction proposal, there is no further consideration. The OWNER reserves the right to make final determination.

G. If the CONTRACTOR's cost reduction proposal is accepted in whole or in part, such acceptance will be made by a contract Change Order, which specifically states that the change is executed pursuant to this cost reduction proposal section. Such Change Order shall incorporate the changes in the plans and specifications which are necessary to permit the cost reduction proposal or such part of it as has been accepted to be put into effect and shall include any conditions upon which the OWNER's approval is based, if such approval is conditional. The Change Order shall also describe the estimated net savings in the cost of performing the work attributable to the cost reduction proposal, and shall further provide that the contract cost be adjusted by crediting the OWNER with the estimated net savings amount.

H. Acceptance of the cost reduction proposal and performance of the work does not extend the time of completion of the contract, unless specifically provided in the Change Order authorizing the use of the submitted proposal. Should the adoption of the cost reduction proposal result in a Contract Time savings, the total Contract Time shall be reduced by an amount equal to the time savings realized.

I. The amount specified to the CONTRACTOR in the Change Order accepted in the cost reduction proposal shall constitute full compensation for the performance of WORK. No claims for additional costs as a result of the changes specified in the cost reduction proposal shall be allowed.

J. The OWNER reserves the right to adopt and utilize any approved cost reduction proposal for general use on any contract administered when it is determined suitable for such application. Cost reduction proposals identical, similar, or previously submitted will not be accepted for consideration if acceptance and compensation has previously been approved. The OWNER reserves the right to use all or part of any cost reduction proposal without obligation or compensation of any kind to the CONTRACTOR.

K. The CONTRACTOR shall bear the costs, if any, to revise all bonds and insurance requirements for the project, to include the cost reduction WORK.

END OF SECTION

SECTION 00800 - SUPPLEMENTARY GENERAL CONDITIONS

GENERAL. These Supplementary General Conditions make additions, deletions, or revisions to the General Conditions as indicated herein. All provisions which are not so added, deleted, or revised remain in full force and effect. Terms used in these Supplementary General Conditions which are defined in the General Conditions have the meanings assigned to them in the General Conditions.

SGC 1 DEFINITIONS. ***Remove*** the definition for Contract Documents and ***replace*** with the following:

Contract Documents – The Table of Contents, Notice Inviting Bids, Instructions to Bidders, Bid Forms (including the Bid, Bid Schedule(s), Subcontractor Report, Bid Bond, and all required certificates and affidavits), Agreement, Performance Bond, Payment Bond, General Conditions, Supplementary General Conditions, Alaska Labor Standards, Reporting, and Prevailing Wage Rate Determination, Special Provisions, Standard Specifications, Technical Specifications, Drawings, Permits, and all Addenda, and Change Orders executed pursuant to the provisions of the Contract Documents.

SGC 2.2 COPIES OF DOCUMENTS. ***Add*** the following:

The OWNER shall furnish to the CONTRACTOR two (2) hard copies of the Contract Documents, which will include bound reduced Drawings, and electronic files of the documents in pdf format. Additional copies of contract documents are the responsibility of the contractor.

SGC 3.2 ORDER OF PRECEDENCE OF CONTRACT DOCUMENTS. ***Remove*** No. 12. Technical Specifications and No. 13. Drawings, and ***add*** the following:

12. Special Provisions Section
13. Standard Specifications for Civil Engineering Projects and Subdivision Improvements December 2003 Edition with current Errata Sheets.
14. Drawings.

SGC 4.2 PHYSICAL CONDITIONS - SUBSURFACE AND EXISTING STRUCTURES. ***Add*** the following:

C. In the preparation of the Contract Documents, the Engineer of Record has relied upon field measurements and visual inspection of the existing structures and surface conditions.

SGC - 4.6 USE OF THE CBJ/STATE LEMON CREEK GRAVEL PIT. ***Add*** the following.

The CBJ/State Lemon Creek Gravel Pit is available for this Project.

SGC - 4.6 USE OF THE CBJ/STATE LEMON CREEK GRAVEL PIT.

Wherever the land use permits are referenced, ***delete*** and ***replace with*** the permit number USE2008-00061.

- ***Delete*** the last sentence of Paragraph A and ***replace with*** the following: "Contact Michael Eich, CBJ Material Source Manager, at (907) 586-0800 ext. 4192 for the current material rates."

- ***Delete*** paragraph C., and ***replace*** with the following paragraph C.

C. CONTRACTORs deciding to use material from the CBJ/State pit shall provide an Individual Mining Plan prepared by a professional engineer registered in the State of Alaska. The Individual Mining Plan must be reviewed and approved by the CBJ, prior to commencing operations within the pit. CONTRACTORs

shall also secure a Performance Bond to ensure compliance with contract provisions, including any Individual Mining Plan stipulations. The bond shall remain in full force and effect until a release is obtained from the CBJ. A $10,000 cash processing restoration bond is required prior to screening or primary crushing operations.

- ***Add*** the following paragraphs:

J. Contractors choosing to mine material from CBJ material sources are also subject to the conditions contained in each site's Multi Sector General Permit for Stormwater Discharges associated with industrial activities (MSGP) and the Storm Water Pollution Prevention Plan (SWPPP).

K. Contractors choosing to perform screening or primary crushing shall comply with all requirements of Mine Safety and Health Administration (MSHA) Part 46, and must obtain a Contractor ID number (7000-52) from MSHA.

Add the following SGC 4.7**:**

SGC 4.7 USE OF CITY/STATE STABLER'S POINT ROCK QUARRY. ***Add*** the following:

The CBJ/State Stabler's Point Rock Quarry is available for this Project.

Add the following SGC 4.7**:**

SGC 4.7 USE OF CITY/STATE STABLER'S POINT ROCK QUARRY.

A. On City and Borough of Juneau construction projects, the CBJ may make unclassified material available to the CONTRACTOR, from the City/State Stabler's Point rock quarry, at a rate less than charged other customers. The CONTRACTOR is not required to use material from the CBJ/State quarry and the CBJ makes no guarantee as to the quantity or quality of material. Contact Michael Eich, CBJ Material Source Manager, at (907) 586-0800 ext. 4192 for the current material rates.

B. The CONTRACTOR proposing to use material from the City/State quarry is required to be in good standing for all amounts owed to the CBJ, for previous gravel operations, prior to submitting a mining plan for approval. The CONTRACTOR using the quarry must comply with Conditional Use Permit USE2011-00017. Failure to meet these requirements, if so subject, shall be sufficient reason to deny use of the City/State Stabler's Point rock quarry as a rock source. To determine if your company is subject to these requirements, contact the CBJ Engineering Department, Rock Quarry Management, at (907) 586-0800 ext. 4192.

C. The CONTRACTOR deciding to use material from the CBJ/State Stabler's Point rock quarry shall provide an Individual Mining Plan prepared by a professional engineer registered in the State of Alaska. The Individual Mining Plan must be reviewed and approved by the CBJ, prior to commencing operations with the pit. The CONTRACTOR shall also secure a Performance Bond to ensure compliance with contract provisions, including any Individual Mining Plan stipulations. The bond shall remain in full force and effect until a release is obtained from the CBJ. A $10,000.00 cash processing restoration bond is required prior to screening or primary crushing operations.

D. The CONTRACTOR must submit an Individual Mining Plan that is in compliance with Conditional

Use Permit No. USE 2011-00017 for rock extraction with the City/State Stabler's Point rock quarry. The CONTRACTOR must contact the CBJ Engineering Department for conditions for the extraction.

E. The CONTRACTOR shall account for placement of materials removed from the quarry. The CBJ may require the CONTRACTOR to cross-check weight tickets, submit to an audit, or participate in other measures required by the CBJ to ensure accountability. Unprocessed overburden removed from the quarry will not be weighed. All other material mined will be measured by truck load or survey. The CONTRACTOR will be responsible for loading, screening and sorting their own material. Primary screening may be allowed in the quarry. Primary crushing may be allowed according to the conditions of the Conditional Use Permit No USE2011-00017.

F. The rock quarry overhead charge shall be paid to the CBJ within 60 days after removing material from the quarry and prior to requesting and/or receiving final payment. Upon completion of the excavation the CONTRACTOR shall notify the CBJ, in writing, in sufficient time to perform a field-compliance examination prior to vacating the quarry. Any significant deviation from the stipulations of the Individual Mining Plan identified during the field inspection shall be corrected by the CONTRACTOR prior to release of the bond. A signed release from CBJ will be required prior to releasing the CONTRACTOR's bond.

G. The City/State Stabler's Point rock quarry is a by-project operation. The hours of operation are stipulated in Conditional Use Permit No. USE2011-00017.

H. All Contractors/Equipment Operators using the CBJ/State Stabler's Point rock quarry shall be in compliance with Federal Mine Safety and Health Administration regulations for quarry and gravel operations.

I. Contractors choosing to mine material from CBJ material sources are also subject to the conditions contained in each site's Multi Sector General Permit for Stormwater Discharges associated with industrial activities (MSGP) and the Storm Water Pollution Prevention Plan (SWPPP).

SGC 5.1 PERFORMANCE, PAYMENT, AND OTHER BONDS. The Contractor shall furnish Performance and Payment Bonds in the amount of 100% of the Bid.

SGC 5.2 INSURANCE AMOUNTS. The limits of liability for the insurance required by Paragraph 5.2 of the General Conditions shall provide coverage for not less than the following amounts or greater where required by Laws and Regulations**.** The CONTRACTOR must provide certification of proper insurance coverage and amendatory endorsements or copies of the applicable policy language affecting coverage required in this agreement to the City and Borough of Juneau. All certificates of insurance supplied to the OWNER shall state that the OWNER is named as **"Additional Insured for any and all work performed for the City & Borough of Juneau" for the Commercial General Liability policy and any other policies, if required in this Section.** NOTE: This requirement has changed. The OWNER no longer requires certificates of insurance referencing project names and contract numbers.

Delete paragraph C and ***Replace*** with the following paragraph C:

C. The CONTRACTOR shall furnish the OWNER with certificates showing the type, amount, class of operations covered, effective dates and dates of expiration of policies. Failure of CBJ to demand such certificate or other evidence of full compliance with these insurance requirements or failure of CBJ to identify a deficiency from evidence that is provided shall not be construed as a waiver of the obligation of the Contractor to maintain the insurance required by this contract. The coverage afforded

will not be cancelled, reduced in coverage, or renewal refused until at least 30 days' prior written notice has been given to the OWNER by the CONTRACTOR. **All such insurance required herein (except for Workers' Compensation and Employer's Liability) shall name the OWNER, its Consultants and subconsultants and their officers, directors, agents, and employees as "additional insureds" under the policies.**

The CONTRACTOR shall purchase and maintain the following insurance:

1. Workers' Compensation and Employer's Liability. This insurance shall protect the CONTRACTOR against all claims under applicable state workers' compensation laws. The CONTRACTOR shall also be protected against claims for injury, disease, or death of employees which, for any reason, may not fall within the provisions of a Workers' Compensation law. The CONTRACTOR shall require each Subcontractor similarly to provide Workers' Compensation Insurance for all of the latter's employees to be engaged in such work unless such employees are covered by the protection afforded by the CONTRACTOR's Workers' Compensation Insurance. In case any class of employees is not protected, under the Workers' Compensation Statute, the CONTRACTOR shall provide and shall cause each subcontractor to provide adequate employer's liability insurance for the protection of such of its employees as are not otherwise protected. **The CONTRACTOR grants a waiver of any right to subrogation against the OWNER by virtue of the payment of any loss under such insurance.** This provision applies regardless of whether or not the OWNER has received a waiver of subrogation endorsement from the insurer.

Workers' Compensation: (under Paragraph 5.2C.1 of the General Conditions) as in accordance with AS 23.30.045:

a. State: Statutory
b. Applicable Federal (e.g., Longshore): Statutory

Note: If the WORK called for in the Contract Documents involves work in or on any navigable waters, the CONTRACTOR shall provide Workers' Compensation coverage which shall include coverage under the Longshore and Harbor Workers' Compensation Act, the Jones Act, and any other coverage required under Federal or State laws pertaining to workers in or on navigable waters.

a. Employers Liability

Bodily Injury by Accident:	$100,000.00	Each Accident
Bodily Injury by Disease:	$100,000.00	Each Employee
Bodily Injury by Disease:	$500,000.00	Policy Limit

1. CONTRACTOR agrees to waive all rights of subrogation against the OWNER for WORK performed under contract.
2. If CONTRACTOR directly utilizes labor outside of the State of Alaska in the prosecution of the WORK, "Other States" endorsement shall be required as a condition of the contract.

2. Commercial General Liability (CGL), including products and completed operations, property damage, bodily injury and personal and advertising injury, with limits no less than $1,000,000 each occurrence and $2,000,000 aggregate. (under Paragraph 5.2C.2 of the General Conditions) **This insurance policy is to contain, or be endorsed to contain, additional**

insured status for the CBJ, its officers, officials, employees, and volunteers. If Additional insured status is provided in the form of an endorsement to the Contractor's insurance, the endorsement shall be at least as broad as ISO Form CG 20 10 11 85 or **both** CG 20 10, CG 20 26, CG 20 33, or CG 20 38; **and** CG 20 37 forms if later revisions used).

3. Commercial Automobile Liability: (under Paragraph 5.2C.3 of the General Conditions) including Owned, Hired, and Non-Owned Vehicles:

   Combined Single Limit, Bodily Injury and Property Damage $1,000,000.00

   This insurance policy is to contain, or be endorsed to contain, additional insured status for the CBJ, its officers, officials, employees, and volunteers The CONTRACTOR shall require each Subcontractor similarly to provide Commercial Automobile Liability Insurance for all of the latter's employees to be engaged in such WORK unless such employees are covered by the protection afforded by the CONTRACTOR's Commercial Automobile Liability Insurance.

Add the following paragraphs:

C. Builder's Risk: CONTRACTOR is not required to obtain a Builder's Risk insurance policy for this project. The OWNER carries Builder's Risk insurance. If a Builder's Risk claim is filed for this project, the CONTRACTOR will we responsible for the first $10,000 of the policy's deductible, and the OWNER will be responsible for the remaining deductible.

D. All Subcontractors are required to secure and maintain the insurance coverages listed above, unless otherwise noted.

E. If the CONTRACTOR maintains higher limits than the minimums shown above, the OWNER requires and shall be entitled to coverage for the higher limits maintained by the CONTRACTOR. Any available insurance proceeds in excess of the specified minimum limits of insurance and coverage shall be available to the OWNER.

F. Policies shall also specify insurance provided by CONTRACTOR will be considered primary and not contributory to any other insurance available to the OWNER.

G. Should any of the policies described above be cancelled before the expiration date thereof, notice will be delivered in accordance with the policy provisions.

SGC 6.5 CONCERNING SUBCONTRACTORS, SUPPLIERS, AND OTHERS. ***Add*** the following:

B. The CONTRACTOR shall perform not less than 40% of the WORK with its own forces (i.e., without subcontracting). The 40% requirement shall be understood to mean that the CONTRACTOR shall perform, with its own organization, WORK amounting to at least 40% of the original contract amount. The 40% requirement will be calculated based upon the total of the subcontract amounts submitted for Contract Award, and any other information requested by the OWNER from the apparent low Bidder.

SGC 6.5 CONCERNING SUBCONTRACTORS, SUPPLIERS, AND OTHERS, ***Add*** the following paragraph:

C. CONTRACTOR must pay Subcontractors and/or Suppliers within 30 days of receiving payment from the OWNER, if that payment was made for Work performed by the Subcontractor and/or materials received. Failure to pay Subcontractors within 30 days of receiving payment from which Subcontractor and/or Supplier is to be paid may result in the OWNER initiating debarment proceedings as prescribed in the City and Borough of Juneau Purchasing Code. *The 30 day City and Borough of Juneau requirement does not supersede AS 36.90.210.*

SGC 6.6 PERMITS, ***Add*** the following paragraph:

D. Contractor is responsible for obtaining a Hot Works permit from the CBJ Permit Center, if performing work which requires such a permit. Work requiring a Hot Works Permit includes but is not limited to the following: cutting, welding, Thermit welding, brazing, soldering, grinding, thermal spraying, thawing pipe, installation of torch-applied roof systems or any other similar activity.

SGC 14.3 APPLICATION FOR PROGRESS PAYMENT. Paragraph D.

D. The Value of Materials Stored at the site shall be an amount equal to 85%.

SGC 14.9 FINAL PAYMENT AND ACCEPTANCE. ***Add*** the following paragraph:

C. Prior to the final payment the CONTRACTOR shall contact the Alaska Department of Labor and Workforce Development (ADOL) and provide the OWNER with clearance from the ADOL for the CONTRACTOR and all Subcontractors that have worked on the Project. This clearance shall indicate that all Employment Security Taxes have been paid. A sample form for this purpose is at the end of this section. The CONTRACTOR shall also submit a "NOTICE OF COMPLETION OF PUBLIC WORKS" signed by ADOL.

SGC 16.8 CERTIFIED PAYROLLS. ***Change*** paragraph A. to read:

A. All CONTRACTORs or Subcontractors who perform work on a public construction contract for the OWNER shall file a certified payroll with Alaska Department of Labor. See Section 00830 - Alaska Labor Standards, Reporting, and Prevailing Wage Rate Determination.

Add the following SGC 16.12.

SGC 16.12 EQUAL EMPLOYMENT OPPORTUNITY (EEO)

The CONTRACTOR may not discriminate against any employee or applicant for employment because of race, religion, color, national origin, age, disability, sex, sexual orientation, gender identity, gender expression, marital status, changes in marital status, pregnancy or parenthood. The CONTRACTOR shall post a notice setting out the provisions of this paragraph in a conspicuous place available to employees and applicants for employment.

The CONTRACTOR and each Subcontractor shall state in all solicitations and advertisements for employees to work on this Project, that it is an Equal Opportunity Employer and that all qualified applicants will receive consideration for employment without regard to race, religion, color, national origin, age, disability, sex, sexual orientation, gender identity, gender expression, marital status, changes in marital status, pregnancy or parenthood.

The CONTRACTOR shall include the provisions of this EEO article in every contract relating to this Project and shall require the inclusion of these provisions in every agreement entered into for this Project, so that those provisions will be binding upon the CONTRACTOR and each Subcontractor.

THE STATE of ALASKA
GOVERNOR MICHAEL J. DUNLEAVY

Department of Labor and Workforce Development

Division of Employment and Training Services
Employment Security Tax

P.O. Box 115509
Juneau, AK 99811-5509
Relay Alaska (in state): (800) 770-8973 or 7.1.1
Relay Alaska (out of state): (800) 770-8255
Toll free: (888) 448-2937
Phone: (907) 465-2787
Fax: (907) 465-2374

Tax Clearance Request Form for Contractors

Date of request: _____

Business name of the contractor a Tax Clearance is being requested for: _____

_____

Business address: _____

Business contact phone number: _____

Federal Identification Number: _____

Alaska Employer Account Number: _____

Specific time period a tax clearance is being requested for *(i.e. beginning and ending date of a subcontract agreement)*:

_____

Subcontract project name: _____

_____

Name and address of the person this Tax Clearance is to be returned to: _____

_____

Comments or additional information: _____

_____

For agency use only:

☐ Tax Clearance is granted

☐ Tax Clearance is not granted *(please have employer contact the department)*

☐ No account on file, liability unknown *(please have employer contact the department)*

☐ Employer has stated no employees, Tax Clearance not required.

Agency representative signature: _____ Date:_____

Agency representative title: _____

We are an equal opportunity employer/program. Auxiliary aids and services are available upon request to individuals with disabilities. labor.alaska.gov/estax

SECTION 00830 - ALASKA LABOR STANDARDS, REPORTING, AND PREVAILING WAGE RATE DETERMINATION

State of Alaska, Department of Labor, Laborers' and Mechanics' Minimum Rates of Pay, AS 36.05.010 and AS 36.05.050, Wage and Hour Administration Pamphlet No. 600, the latest edition published by the State of Alaska, Department of Labor inclusive, is provided in its entirety in SECTION 00830 – APPENDIX A.

The rates that are in effect 10 days prior to the final date for submission of bids are the rates that will apply to this project. These rates will apply for 24 calendar months from the date the project is awarded to a prime contractor. At the end of the initial 24-month period, the latest wage rates issued by the Alaska Department of Labor shall become effective for the next 24-month period. This process repeats itself until the project is completed.

The CONTRACTOR is responsible for contacting the Alaska Department of Labor to determine compliance with current regulations.

Correspondence regarding Title 36 requirements may be submitted to ADOL electronically or paper copies can be submitted by mail. To submit Title 36 documents and certified payrolls electronically, go to https://myalaska.state.ak.us/home/app.

The CONTRACTOR and each Subcontractor shall submit Certified Payrolls to the CBJ Contract Administrator upon request. If the requested Certified Payrolls are not received by the Contract Administrator within five (5) working days, the Contract Administrator will request the Certified Payrolls from ADOL. The CONTRACTOR shall be responsible for all costs charged by ADOL for delivery of the requested Certified Payrolls, including those costs for Subcontractors.

Within 10 Days of "Notice of Award/Notice to Proceed" make a list of **all** Subcontractors. Include their name, address, phone, estimated subcontract amount, and estimated start and finish dates. Send this list to the Wage and Hour Section (contact information below).

Certified Payrolls must be submitted every two weeks. Before the second Friday, each CONTRACTOR and Subcontractor must file Certified Payrolls with Statements of Compliance for the previous two weeks. Indicate ***"Start"*** on your first payroll, and ***"Final"*** on your last payroll for this Project.

As part of the **final payment request package,** CONTRACTOR must submit a "NOTICE OF COMPLETION OF PUBLIC WORKS" form signed by ADOL personnel.

Contact Information:

Wage and Hour Section
State of Alaska
Department of Labor and Workforce Development
Labor Standards and Safety Division
Wage and Hour Administration
P.O. Box 11149
Juneau, AK 99811-1149
907-465-4842
http://labor.state.ak.us/lss/home.htm

and

Caleb Comas, Contract Administrator
City and Borough of Juneau
155 S. Seward Street
Juneau, AK 99801
(907) 586-0800 ext. 4196
caleb.comas@juneau.org

SECTION 00830

APPENDIX A

Laborers' & Mechanics'
Minimum Rates of Pay

Pamphlet 600

Effective September 1, 2021

Laborers' and Mechanics' MINIMUM RATES OF PAY

Effective September 1, 2021 Issue 43

PAMPHLET No. 600

Title 36. Public Contracts
AS 36.05



DEPARTMENT OF LABOR
AND WORKFORCE DEVELOPMENT
Wage and Hour

- This page intentionally left blank -

THE STATE of ALASKA
GOVERNOR MIKE DUNLEAVY

Department of Labor and Workforce Development

Office of the Commissioner

Post Office Box 111149
Juneau, Alaska 99811
Main: 907.465.2700
fax: 907.465-2784

September 1, 2021

TO ALL CONTRACTING AGENCIES:

At the Alaska Department of Labor and Workforce Development, our goal is putting Alaskans to work. This pamphlet is designed to help contractors awarded public construction contracts understand the most significant laws of the State of Alaska pertaining to prevailing wage.

This pamphlet identifies current prevailing wage rates for public construction contracts (any construction projects awarded for the State of Alaska or its political subdivisions, such as local governments and certain non-profit organizations). Because these rates may change in a subsequent determination, please be sure you are using the appropriate rates. The rates published in this edition become effective September 1, 2021.

The prevailing wage rates contained in this pamphlet are applicable to public construction projects with a final bid date of September 11, 2021, or later. As the law now provides, these rates will remain stable during the life of a contract or for 24 calendar months, whichever is shorter. **The 24-month period begins on the date the prime contract is awarded.** Upon expiration of the initial 24-month period, the latest wage rates issued by the department shall become effective for a subsequent 24-month period or until the original contract is completed, whichever occurs first. This process shall be repeated until the original contract is completed.

The term "original contract" means the signed contract that resulted from the original bid and any amendments, including changes of work scope, additions, extensions, change orders, and other instruments agreed to by the parties that have not been subject to subsequent open bid procedures.

If a higher federal rate is required due to partial federal funding or other federal participation, the higher rate must be paid.

For additional copies of this pamphlet go to: http://labor.state.ak.us/lss/pamp600.htm

For questions regarding prevailing wage or employment preference requirements, please contact the nearest Wage and Hour office. These offices are listed on Page x.

Sincerely,

Tamika L. Ledbetter

Dr. Tamika L. Ledbetter
Commissioner

- This page intentionally left blank -

Table of Contents

Excerpts from Alaska Law

Sec. 36.05.005. Applicability.... ….iv
Sec. 36.05.010. Wage rates on public construction. iv
Sec. 36.05.040. Filing schedule of employees, wages paid and other information iv
Sec. 36.05.045. Notice of work and completion; withholding of payment iv
Sec. 36.05.060. Penalty for violation of this chapter v
Sec. 36.05.070. Wage rates in specifications and contracts for public works v
Sec. 36.05.080. Failure to pay agreed wages v
Sec. 36.05.090. Payment of wages from withheld payments and listing contractors who violate contracts v
Sec. 36.05.900. Definition.. vi

Excerpts from Alaska Administrative Code

8 AAC 30.051. Purpose vi
8 AAC 30.052. Board and lodging; remote sites vi
8 AAC 30.054. Per diem instead of board and lodging vi
8 AAC 30.056. Alternative arrangement.... vii
8 AAC 30.900. General definitions (selected excerpts).... vii

Additional Information

Per Diem vii
Laborer Classification Clarification.... viii
Apprentice Rates.... viii
Fringe Benefit Plans.... viii
Special Prevailing Wage Rate Determination.... ix
Alaska Employment Preference Information.... ix
Labor Standards and Safety Notice Requests x
Debarment List x

Wage Rates .... Pages 1-26

Note to Readers: The statutes and administrative regulations listed in this publication were taken from the official codes, as of the effective date of the publication. However, there may be errors or omissions that have not been identified and changes that occurred after the publication was printed. This publication is intended as an informational guide only and is not intended to serve as a precise statement of the statutes and regulations of the State of Alaska. To be certain of current laws and regulations, please refer to the official codes.

EXCERPTS FROM ALASKA LAW

Sec. 36.05.005. Applicability.
This chapter applies only to a public construction contract that exceeds $25,000.

Sec. 36.05.010. Wage rates on public construction.
A contractor or subcontractor who performs work on a public construction contract in the state shall pay not less than the current prevailing rate of wages for work of a similar nature in the region in which the work is done. The current prevailing rate of wages is that contained in the latest determination of prevailing rate of wages issued by the Department of Labor and Workforce Development at least 10 days before the final date for submission of bids for the contract. The rate shall remain in effect for the life of the contract or for 24 calendar months, whichever is shorter. At the end of the initial 24-month period, if new wage determinations have been issued by the department, the latest wage determination shall become effective for the next 24-month period or until the contract is completed, whichever occurs first. This process shall be repeated until the contract is completed.

Sec. 36.05.040. Filing schedule of employees, wages paid, and other information.
All contractors or subcontractors who perform work on a public construction contract for the state or for a political subdivision of the state shall, before the Friday of every second week, file with the Department of Labor and Workforce Development a sworn affidavit for the previous reporting period, setting out in detail the number of persons employed, wages paid, job classification of each employee, hours worked each day and week, and other information on a form provided by the Department of Labor and Workforce Development.

Sec. 36.05.045. Notice of work and completion; withholding of payment.

(a) Before commencing work on a public construction contract, the person entering into the contract with a contracting agency shall designate a primary contractor for purposes of this section. Before work commences, the primary contractor shall file a notice of work with the Department of Labor and Workforce Development. The notice of work must list work to be performed under the public construction contract by each contractor who will perform any portion of work on the contract and the contract price being paid to each contractor. The primary contractor shall pay all filing fees for each contractor performing work on the contract, including a filing fee based on the contract price being paid for work performed by the primary contractor's employees. The filing fee payable shall be the sum of all fees calculated for each contractor. The filing fee shall be one percent of each contractor's contract price. The total filing fee payable by the primary contractor under this subsection may not exceed $5,000. In this subsection, "contractor" means an employer who is using employees to perform work on the public construction contract under the contract or a subcontract.

(b) Upon completion of all work on the public construction contract, the primary contractor shall file with the Department of Labor and Workforce Development a notice of completion together with payment of any additional filing fees owed due to increased contract amounts. Within 30 days after the department's receipt of the primary contractor's notice of completion, the department shall inform the contracting agency of the amount, if any, to be withheld from the final payment.

(c) A contracting agency

(1) may release final payment of a public construction contract to the extent that the agency has received verification from the Department of Labor and Workforce Development that

(A) the primary contractor has complied with (a) and (b) of this section;

(B) the Department of Labor and Workforce Development is not conducting an investigation under this title; and

(C) the Department of Labor and Workforce Development has not issued a notice of a violation of this chapter to the primary contractor or any other contractors working on the public construction contract; and

(2) shall withhold from the final payment an amount sufficient to pay the department's estimate of what may be needed to compensate the employees of any contractors under investigation on this construction contract, and any unpaid filing fees.

(d) The notice and filing fee required under (a) of this section may be filed after work has begun if
   (1) The public construction contract is for work undertaken in immediate response to an emergency; and
   (2) The notice and fees are filed not later than 14 days after the work has begun.

(e) A false statement made on a notice required by this section is punishable under AS 11.56.210.

Sec. 36.05.060. Penalty for violation of this chapter.

A contractor who violates this chapter is guilty of a misdemeanor and upon conviction is punishable by a fine of not less than $100 nor more than $1,000, or by imprisonment for not less than 10 days nor more than 90 days, or by both. Each day a violation exists constitutes a separate offense.

Sec. 36.05.070. Wage rates in specifications and contracts for public works.

(a) The advertised specifications for a public construction contract that requires or involves the employment of mechanics, laborers, or field surveyors must contain a provision stating the minimum wages to be paid various classes of laborers, mechanics, or field surveyors and that the rate of wages shall be adjusted to the wage rate under AS 36.05.010.

(b) Repealed by §17 ch 142 SLA 1972.

(c) A public construction contract under (a) of this section must contain provisions that
   (1) the contractor or subcontractors of the contractor shall pay all employees unconditionally and not less than once a week;
   (2) wages may not be less than those stated in the advertised specifications, regardless of the contractual relationship between the contractor or subcontractors and laborers, mechanics, or field surveyors;
   (3) the scale of wages to be paid shall be posted by the contractor in a prominent and easily accessible place at the site of the work;
   (4) the state or a political subdivision shall withhold so much of the accrued payments as is necessary to pay to laborers, mechanics, or field surveyors employed by the contractor or subcontractors the difference between
      (A) the rates of wages required by the contract to be paid laborers, mechanics, or field surveyors on the work; and
      (B) the rates of wages in fact received by laborers, mechanics, or field surveyors.

Sec. 36.05.080. Failure to pay agreed wages.

Every contract within the scope of AS 36.05.070 shall contain a provision that if it is found that a laborer, mechanic, or field surveyor employed by the contractor or subcontractor has been or is being paid a rate of wages less than the rate of wages required by the contract to be paid, the state or its political subdivision may, by written notice to the contractor, terminate the contractor's right to proceed with the work or the part of the work for which there is a failure to pay the required wages and to prosecute the work to completion by contract or otherwise, and the contractor and the contractor's sureties are liable to the state or its political subdivision for excess costs for completing the work.

Sec. 36.05.090. Payment of wages from withheld payments and listing contractors who violate contracts.

(a) The state disbursing officer in the case of a state public construction contract and the local fiscal officer in the case of a political subdivision public construction contract shall pay directly to laborers, mechanics, or field surveyors from accrued payments withheld under the terms of the contract the wages due laborers, mechanics, or field surveyors under AS 36.05.070.

(b) The state disbursing officer or the local fiscal officer shall distribute to all departments of the state government and to all political subdivisions of the state a list giving the names of persons who have disregarded their obligations to employees. A person appearing on this list and a firm, corporation, partnership, or association in which the person has an interest may not work as a contractor or

subcontractor on a public construction contract for the state or a political subdivision of the state until three years after the date of publication of the list. If the accrued payments withheld under the contract are insufficient to reimburse all the laborers, mechanics, or field surveyors with respect to whom there has been a failure to pay the wages required under AS 36.05.070, the laborers, mechanics, or field surveyors have the right of action or intervention or both against the contractor and the contractor's sureties conferred by law upon persons furnishing labor or materials, and in the proceedings it is not a defense that the laborers, mechanics, or field surveyors accepted or agreed to accept less than the required rate of wages or voluntarily made refunds.

Sec. 36.05.900. Definition.
In this chapter, "contracting agency" means the state or a political subdivision of the state that has entered into a public construction contract with a contractor.

EXCERPTS FROM ALASKA ADMINISTRATIVE CODE

Notice:** Regulations relating to board and lodging and per diem went into effect on November 25, 2018. The new regulations are excerpted here

8 AAC 30.051. Purpose. The purpose of 8 AAC 30.052 – 8 AAC 30.056 is to ensure that wages paid to laborers, mechanics, and field surveyors do not fall below the prevailing rate of pay.

8 AAC 30.052. Board and lodging; remote sites. (a) A contractor on a public construction project located 65 or more road miles from the international airport closest to the project area in either Fairbanks, Juneau, or Anchorage, or that is inaccessible by road in a two-wheel drive vehicle, shall provide adequate board and lodging to each laborer, mechanic, or field surveyor while the person is employed on the project. If commercial lodging facilities are not available, the contractor shall provide temporary lodging facilities. Lodging facilities must comply with all applicable state and federal laws. For a highway project, the location of the project is measured from the midpoint of the project.

(b) A contractor is not required to provide board and lodging:

(1) to a laborer, mechanic, or field surveyor who is a domiciled resident of the project area; or

(2) on a laborer, mechanic, or field surveyor's scheduled days off, when the person can reasonably travel between the project and the person's permanent residence; for the purposes of this paragraph, "scheduled day off" means a day in which a person does not perform work on-site, is not required to remain at or near the job location for the benefit of the contractor, and is informed of the day off at least seven days before the day off.

(c) Upon a contractor's written request, the commissioner may waive the requirements of (a) of this section where:

(1) the project is inaccessible by road in a two-wheel drive vehicle, but the laborer, mechanic, or field surveyor can reasonably travel between the project and the person's permanent residence within one hour; or

(2) a laborer, mechanic, or field surveyor is not a domiciled resident of the project area, but has established permanent residence, with the intent to remain indefinitely, within 65 road miles of the project, or for a highway project, the mid-point of the project.

8 AAC 30.054. Per diem instead of board and lodging. (a) A contractor may pay a laborer, mechanic, or field surveyor per diem instead of providing board and lodging, when the following conditions are met:

(1) the department determines that per diem instead of board and lodging is an established practice for the work classification; the department shall publish and periodically revise its determinations in the pamphlet *Laborers' and Mechanics' Minimum Rates of Pay*;

(2) the contractor pays each laborer, mechanic, or field surveyor the appropriate per diem rate as published and periodically revised in the pamphlet *Laborers' and Mechanics' Minimum Rates of Pay*; and

(3) the contractor pays the per diem to each laborer, mechanic, or field surveyor on the same day that wages are paid.

(b) A contractor may not pay per diem instead of board and lodging on a highway project located

(1) west of Livengood on the Elliot Highway, AK-2;

(2) on the Dalton Highway, AK-11;

(3) north of milepost 20 on the Taylor Highway, AK-5;

(4) east of Chicken on the Top of the World Highway; or

(5) south of Tetlin Junction to the Alaska-Canada border on the Alaska Highway, AK-2.

8 AAC 30.056. Alternative arrangement. Upon a contractor's written request, the commissioner may approve an alternative board and lodging or per diem arrangement, provided

(1) the arrangement does not reduce the laborer, mechanic, or field surveyor's wages below the prevailing wage rate; and

(2) the laborer, mechanic, or field surveyor voluntarily enters into and signs the written arrangement; a labor organization representing laborers, mechanics, or field surveyors may enter into the written agreement on their behalf.

8 AAC 30.900. General definitions (selected excerpts only):

In this chapter and in AS 36

(22) "domiciled resident" means a person living within 65 road miles of a public construction project, or in the case of a highway project, the mid-point of the project, for at least 12 consecutive months prior to the award of the public construction project;

(23) "employed on the project" means the time period from the date the laborer, mechanic, or field surveyor first reports on-site to the project through the final date the person reports on-site to the project.

ADDITIONAL INFORMATION

PER DIEM

Notice: New regulations relating to board and lodging and per diem went into effect on November 25, 2018. The regulations provide a comprehensive set of requirements for the provision of board and lodging or per diem for workers on remote projects. Please refer to Alaska Administrative Code 8 AAC Chapter 30 and read the chapter carefully.

The Alaska Department of Labor and Workforce Development has determined that per diem is an established work practice for certain work classifications. These classifications are indicated throughout the Pamphlet by an asterisk (*) under the classification title. If all of the conditions of 8 AAC 30.054 are met, an employer may pay workers in these classifications per diem instead of providing board and lodging on a remote project.

Per Diem Rate: As of May 1st, 2019, the minimum per diem rate is $100.00 per day, or part thereof, the worker is employed on the project. In the event that a contractor provides lodging facilities, but no meals, the department will accept a payment of $48 per day for meals to meet the per diem requirements.

LABORER CLASSIFICATION CLARIFICATION

The laborer rates categorized in class code S1201-S1206 apply in one area of Alaska; the area that is south of N63 latitude and west of W138 Longitude. The laborer rates categorized in class code N1201-N1206 apply in two areas of Alaska; the Alaska areas north of N63 latitude and east of W138 longitude. The following graphic representations should assist with clarifying the applicable wage rate categories:

S1201-
S1206

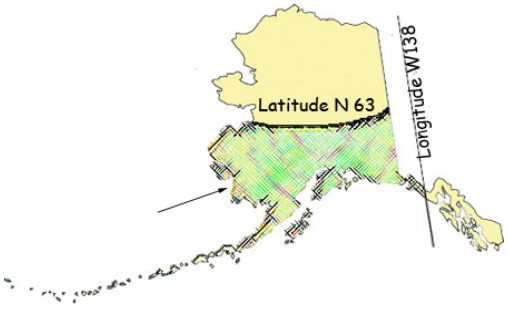

N1201-
N1206

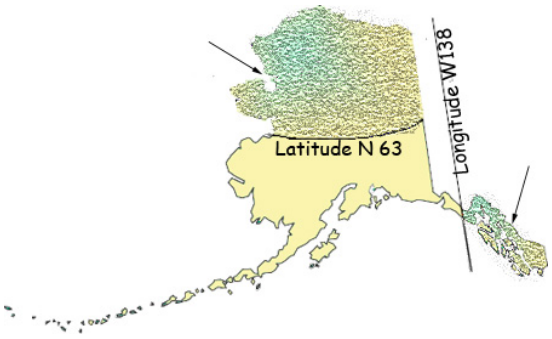

APPRENTICE RATES

Apprentice rates at less than the minimum prevailing rates may be paid to apprentices according to an apprentice program which has been registered and approved by the Commissioner of the Alaska Department of Labor and Workforce Development in writing or according to a bona fide apprenticeship program registered with the U.S. Department of Labor, Office of Apprenticeship Training. **Any employee listed on a payroll at an apprentice wage rate who is not registered as above shall be paid the journeyman prevailing minimum wage in that work classification.** Wage rates are based on prevailing crew makeup practices in Alaska and apply to work performed regardless of either the quality of the work performed by the employee or the titles or classifications which may be assigned to individual employees.

FRINGE BENEFIT PLANS

Contractors/subcontractors may compensate fringe benefits to their employees in any one of three methods. The fringe benefits may be paid into a union trust fund, into an approved benefit plan, or paid directly on the paycheck as gross wages.

Where fringe benefits are paid into approved plans, funds, or programs including union trust funds, the payments must be contributed at least monthly. If contractors submit their own payroll forms and are paying fringe benefits into approved plans, funds, or programs, the employer's certification must include, in addition to those requirements of 8 AAC 30.020(c), a statement that fringe benefit payments have been or will be paid at least monthly. Contractors who pay fringe benefits to a plan must ensure the plan is one approved by the Internal Revenue Service and that the plan meets the requirements of 8 AAC 30.025 (eff. 3/2/08) in order for payments to be credited toward the prevailing wage obligation.

SPECIAL PREVAILING WAGE RATE DETERMINATION

Special prevailing wage rate determinations may be requested for special projects or a special worker classification if the work to be performed does not conform to traditional public construction for which a prevailing wage rate has been established under 8 AAC 30.050(a) of this section. Requests for special wage rate determinations must be in writing and filed with the Commissioner at least 30 days before the award of the contract. An applicant for a special wage rate determination shall have the responsibility to support the necessity for the special rate. An application for a special wage rate determination filed under this section must contain:

(1) a specification of the contract or project on which the special rates will apply and a description of the work to be performed;
(2) a brief narrative explaining why special wage rates are necessary;
(3) the job class or classes involved;
(4) the special wage rates the applicant is requesting, including survey or other relevant wage data to support the requested rates;
(5) the approximate number of employees who would be affected; and
(6) any other information which might be helpful in determining if special wage rates are appropriate.

Requests made pursuant to the above should be addressed to:

Director
Alaska Department of Labor and Workforce Development
Labor Standards and Safety Division
Wage and Hour
P.O. Box 111149
Juneau, AK 99811-1149
-or-
Email: statewide.wagehour@alaska.gov

EMPLOYMENT PREFERENCE INFORMATION

In October 2019, the Alaska Attorney General issued a formal opinion stating that the Alaska Statutes 36.10.150 of the State's 90% Employment Preference law, also known as the Alaska Resident Hire law, violates both the U.S. and Alaska Constitutions. As a result, the state has stopped all enforcement activity.
A copy of the Attorney General opinion is found here:

http://law.alaska.gov/pdf/opinions/opinions_2019/19-005_AK-hire.pdf

Alaska Department of Labor and Workforce Development
Labor Standards and Safety Division
Wage and Hour
Web site: http://labor.state.ak.us/lss/pamp600.htm

Anchorage	Juneau	Fairbanks
1251 Muldoon Road, Suite 113 Anchorage, Alaska 99504-2098 Phone: (907) 269-4900 Email: statewide.wagehour@alaska.gov	PO Box 111149 Juneau, Alaska 99811 Phone: (907) 465-4842 Email: statewide.wagehour@alaska.gov	Regional State Office Building 675 7th Ave., Station J-1 Fairbanks, Alaska 99701-4593 Phone: (907) 451-2886 Email: statewide.wagehour@alaska.gov

LABOR STANDARDS AND SAFETY NOTICE REQUESTS

If you would like to receive Wage and Hour or Mechanical Inspection **regulation notices** or **publications information**, they are available via electronic mail, by signing up in the GovDelivery System, https://public.govdelivery.com/accounts/AKDOL/subscriber/new and selecting topics *LSS – Wage and Hour – Forms and Publications*, *LSS – Mechanical Inspection Regulations*, or *LSS – Wage and Hour Regulations*.

Publications are also available online at http://labor.alaska.gov/lss/home.htm

DEBARMENT LIST

AS 36.05.090(b) states that "the state disbursing officer or the local fiscal officer shall distribute to all departments of the state government and to all political subdivisions of the state a list giving the names of persons who have disregarded their obligations to employees."

A person appearing on the following debarment list and a firm, corporation, partnership, or association in which the person has an interest may not work as a contractor or subcontractor on a public construction contract for the state or a political subdivision of the state for three years from the date of debarment.

Company Name	Debarment Expires

No companies are currently debarred.

Laborers' & Mechanics' Minimum Rates of Pay

Class Code	Classification of Laborers & Mechanics	BHR	H&W	PEN	TRN	Other Benefits		THR
Boilermakers								
	*See per diem note on last page							
						VAC	**SAF**	
A0101	Boilermaker (journeyman)	47.03	8.57	17.02	1.90	3.50	0.34	78.36
Bricklayers & Blocklayers								
	*See per diem note on last page							
						L&M		
A0201	Blocklayer	42.16	9.00	10.05	0.62	0.20		62.03
	Bricklayer Marble or Stone Mason Refractory Worker (Firebrick, Plastic, Castable, and Gunite Refractory Applications) Terrazzo Worker Tile Setter							
						L&M		
A0202	Tuck Pointer Caulker	42.16	9.00	10.05	0.62	0.20		62.03
	Cleaner (PCC)							
						L&M		
A0203	Marble & Tile Finisher	35.99	9.00	10.05	0.62	0.20		55.86
	Terrazzo Finisher							
						L&M		
A0204	Torginal Applicator	40.10	9.83	8.50	0.55	0.15	0.87	60.00
Carpenters, Region I (North of 63 latitude)								
	*See per diem note on last page							
						L&M	**SAF**	
N0301	Carpenter (journeyman)	42.34	10.08	15.23	1.75	0.20	0.20	69.80
	Lather/Drywall/Acoustical							
Carpenters, Region II (South of N63 latitude)								
	*See per diem note on last page							
						L&M	**SAF**	
S0301	Carpenter (journeyman)	42.34	10.08	15.77	1.75	0.20	0.20	70.34
	Lather/Drywall/Acoustical							
Cement Masons								
	*See per diem note on last page							

Wage benefits key: BHR=basic hourly rate; H&W=health and welfare; IAF=industry advancement fund; LEG=legal fund; L&M=labor/management fund; PEN=pension fund; SAF=safety; SUI=supplemental unemployment insurance; S&L=SUI & LEG combined; TRN=training; THR=total hourly rate; VAC=vacation

Class Code	Classification of Laborers & Mechanics	BHR	H&W	PEN	TRN	Other Benefits	THR
Cement Masons							
	*See per diem note on last page						
						L&M	
A0401	Group I, including:	39.38	8.70	11.80	1.43	0.10	61.41
	Application of Sealing Compound						
	Application of Underlayment						
	Building, General						
	Cement Finisher						
	Cement Mason (journeyman)						
	Concrete						
	Concrete Paving						
	Concrete Polishing						
	Concrete Repair						
	Curb & Gutter, Sidewalk						
	Curing of All Concrete						
	General Concrete Pour Tender						
	Grouting & Caulking of Tilt-Up Panels						
	Grouting of All Plates						
	Patching Concrete						
	Screed Pin Setter						
	Screeder or Rodder						
	Spackling/Skim Coating						
						L&M	
A0402	Group II, including:	39.38	8.70	11.80	1.43	0.10	61.41
	Form Setter						
						L&M	
A0403	Group III, including:	39.38	8.70	11.80	1.43	0.10	61.41
	Concrete Saw Cutter Operator (All Control Joints and Self-powered)						
	Curb & Gutter Machine						
	Floor Grinder						
	Pneumatic Power Tools						
	Power Chipping & Bushing						
	Sand Blasting Architectural Finish						
	Screed & Rodding Machine Operator						
	Troweling Machine Operator (all concrete surfaces)						
						L&M	
A0404	Group IV, including:	39.38	8.70	11.80	1.43	0.10	61.41
	Acoustical or Imitation Acoustical Finish						
	Application of All Composition Mastic						
	Application of All Epoxy Material						
	Application of All Plastic Material						
	Finish Colored Concrete						
	Gunite Nozzleman						
	Hand Powered Grinder						

Class Code	Classification of Laborers & Mechanics	BHR	H&W	PEN	TRN	Other Benefits		THR
Cement Masons								
	*See per diem note on last page							
A0404	Group IV, including:	39.38	8.70	11.80	1.43	**L&M** 0.10		61.41
	Preparing, scratching and browsing of all ceilings and walls, finished with terrazo or tile							
	Tunnel Worker							
A0405	Group V, including:	39.38	8.70	11.80	1.43	**L&M** 0.10		61.41
	Casting and finishing							
	EIFS Systems							
	Finishing of all interior and exterior plastering							
	Fireproofing (Pryocrete, Cafco, Albi-Clad, sprayed fiberglass)							
	Gypsum, Portland Cement							
	Kindred material and products							
	Operation and control of all types of plastering machines, including power tools and floats, used by the industry							
	Overcoating and maintenance of interior/exterior plaster surfaces							
	Plasterer							
	Veneer plastering process (Rapid Plaster, U.S.G. "Imperial Systems", and Pabcoat Systems")							
	Venetian plaster and color-integrated Italian/Middle-Eastern line plaster							
Culinary Workers								
A0501	Baker/Cook	28.37	7.31	7.56		**LEG**		43.24
A0503	General Helper	25.07	7.31	7.56		**LEG**		39.94
	Housekeeper							
	Janitor							
	Kitchen Helper							
A0504	Head Cook	28.97	7.31	7.56		**LEG**		43.84
A0505	Head Housekeeper	25.45	7.31	7.56		**LEG**		40.32
	Head Kitchen Help							
Dredgemen								
	*See per diem note on last page							
A0601	Assistant Engineer	41.76	10.70	13.50	1.00	**L&M** 0.10	0.05	67.11
	Craneman							

Class Code	Classification of Laborers & Mechanics	BHR	H&W	PEN	TRN	Other Benefits		THR
Dredgemen								
	*See per diem note on last page							
A0601	Assistant Engineer	41.76	10.70	13.50	1.00	**L&M** 0.10	0.05	67.11
	Electrical Generator Operator (primary pump/power barge/dredge)							
	Engineer							
	Welder							
A0602	Assistant Mate (deckhand)	40.60	10.70	13.50	1.00	**L&M** 0.10	0.05	65.95
A0603	Fireman	41.04	10.70	13.50	1.00	**L&M** 0.10	0.05	66.39
A0605	Leverman Clamshell	44.29	10.70	13.50	1.00	**L&M** 0.10	0.05	69.64
A0606	Leverman Hydraulic	42.53	10.70	13.50	1.00	**L&M** 0.10	0.05	67.88
A0607	Mate & Boatman	41.76	10.70	13.50	1.00	**L&M** 0.10	0.05	67.11
A0608	Oiler (dredge)	41.04	10.70	13.50	1.00	**L&M** 0.10	0.05	66.39
Electricians								
	*See per diem note on last page							
A0701	Inside Cable Splicer	42.02	14.05	13.90	0.95	**L&M** 0.20	**LEG** 0.15	71.27
A0702	Inside Journeyman Wireman, including:	41.69	14.05	14.14	0.95	**L&M** 0.20	**LEG** 0.15	71.18
	Technicians (including use of drones in electrical construction)							
A0703	Power Cable Splicer	60.79	14.05	19.01	0.95	**L&M** 0.25	**LEG** 0.15	95.20
A0704	Tele Com Cable Splicer	50.53	14.05	16.67	0.95	**L&M** 0.20	**LEG** 0.15	82.55
A0705	Power Journeyman Lineman, including:	59.04	14.05	18.96	0.95	**L&M** 0.25	**LEG** 0.15	93.40
	Power Equipment Operator							
	Technician (including use of drones in electrical construction)							
A0706	Tele Com Journeyman Lineman, including:	48.78	14.05	16.61	0.95	**L&M** 0.20	**LEG** 0.15	80.74
	Technician (including use of drones in telecommunications construction)							
	Tele Com Equipment Operator							

Class Code	Classification of Laborers & Mechanics	BHR	H&W	PEN	TRN	Other Benefits		THR
Electricians								
	*See per diem note on last page							
						L&M	**LEG**	
A0707	Straight Line Installer - Repairman	48.78	14.05	16.61	0.95	0.20	0.15	80.74
						L&M	**LEG**	
A0708	Powderman	57.04	14.05	18.90	0.95	0.25	0.15	91.34
						L&M	**LEG**	
A0710	Material Handler	26.57	13.76	5.30	0.15	0.15	0.15	46.08
						L&M	**LEG**	
A0712	Tree Trimmer Groundman	28.37	14.05	12.59	0.15	0.15	0.15	55.46
						L&M	**LEG**	
A0713	Journeyman Tree Trimmer	37.30	14.05	12.86	0.15	0.15	0.15	64.66
						L&M	**LEG**	
A0714	Vegetation Control Sprayer	40.85	14.05	12.97	0.15	0.15	0.15	68.32
						L&M	**LEG**	
A0715	Inside Journeyman Communications CO/PBX	40.27	14.05	13.85	0.95	0.20	0.15	69.47
Elevator Workers								
	*See per diem note on last page							
						L&M	**VAC**	
A0802	Elevator Constructor	42.76	15.88	19.31	0.64	0.54	4.74	83.87
						L&M	**VAC**	
A0803	Elevator Constructor Mechanic	61.08	15.88	19.31	0.64	0.54	6.78	104.23
Heat & Frost Insulators/Asbestos Workers								
	*See per diem note on last page							
						IAF	**LML**	
A0902	Asbestos Abatement-Mechanical Systems	38.68	9.24	11.12	1.20	0.14	0.05	60.43
						IAF	**LML**	
A0903	Asbestos Abatement/General Demolition All Systems	38.68	9.24	11.12	1.20	0.14	0.05	60.43
						IAF	**LML**	
A0904	Insulator, Group II	38.68	9.24	11.12	1.20	0.14	0.05	60.43
						IAF	**LML**	
A0905	Fire Stop	38.68	9.24	11.12	1.20	0.14	0.05	60.43
IronWorkers								
	*See per diem note on last page							
						L&M	**IAF**	
A1101	Ironworkers, including:	40.82	9.51	24.28	0.76	0.20	0.24	75.81

Wage benefits key: BHR=basic hourly rate; H&W=health and welfare; IAF=industry advancement fund; LEG=legal fund; L&M=labor/management fund; PEN=pension fund; SAF=safety; SUI=supplemental unemployment insurance; S&L=SUI & LEG combined; TRN=training; THR=total hourly rate; VAC=vacation

Class Code	Classification of Laborers & Mechanics	BHR	H&W	PEN	TRN	Other Benefits		THR
IronWorkers								
	*See per diem note on last page							
						L&M	**IAF**	
A1101	Ironworkers, including:	40.82	9.51	24.28	0.76	0.20	0.24	75.81
	Bender Operators							
	Bridge & Structural							
	Hangar Doors							
	Hollow Metal Doors							
	Industrial Doors							
	Machinery Mover							
	Ornamental							
	Reinforcing							
	Rigger							
	Sheeter							
	Signalman							
	Stage Rigger							
	Toxic Haz-Mat Work							
	Welder							
						L&M	**IAF**	
A1102	Helicopter	41.82	9.51	24.28	0.76	0.20	0.24	76.81
	Helicopter (used for rigging and setting)							
	Tower (energy producing windmill type towers to include nacelle and blades)							
						L&M	**IAF**	
A1103	Fence/Barrier Installer	37.32	9.51	24.28	0.76	0.20	0.24	72.31
						L&M	**IAF**	
A1104	Guard Rail Layout Man	38.06	9.51	24.28	0.76	0.20	0.24	73.05
						L&M	**IAF**	
A1105	Guard Rail Installer	38.32	9.51	24.28	0.76	0.20	0.24	73.31
Laborers (The Alaska areas north of N63 latitude and east of W138 longitude)								
	*See per diem note on last page							
						L&M	**LEG**	
N1201	Group I, including:	32.00	8.95	20.66	1.30	0.20	0.20	63.31
	Asphalt Worker (shovelman, plant crew)							
	Brush Cutter							
	Camp Maintenance Laborer							
	Carpenter Tender or Helper							
	Choke Setter, Hook Tender, Rigger, Signalman							
	Concrete Labor (curb & gutter, chute handler, curing, grouting, screeding)							
	Crusher Plant Laborer							
	Demolition Laborer							
	Ditch Digger							

Wage benefits key: BHR=basic hourly rate; H&W=health and welfare; IAF=industry advancement fund; LEG=legal fund; L&M=labor/management fund; PEN=pension fund; SAF=safety; SUI=supplemental unemployment insurance; S&L=SUI & LEG combined; TRN=training; THR=total hourly rate; VAC=vacation

Class Code	Classification of Laborers & Mechanics	BHR	H&W	PEN	TRN	Other Benefits		THR
						L&M	LEG	
N1201	Group I, including:	32.00	8.95	20.66	1.30	0.20	0.20	63.31

Laborers (The Alaska areas north of N63 latitude and east of W138 longitude)

*See per diem note on last page

Dumpman
Environmental Laborer (hazard/toxic waste, oil spill)
Fence Installer
Fire Watch Laborer
Flagman
Form Stripper
General Laborer
Guardrail Laborer, Bridge Rail Installer
Hydro-seeder Nozzleman
Laborer, Building
Landscaper or Planter
Laying of Mortarless Decorative Block (retaining walls, flowered decorative block 4 feet or less - highway or landscape work)
Material Handler
Pneumatic or Power Tools
Portable or Chemical Toilet Serviceman
Pump Man or Mixer Man
Railroad Track Laborer
Sandblast, Pot Tender
Saw Tender
Slurry Work
Steam Cleaner Operator
Steam Point or Water Jet Operator
Storm Water Pollution Protection Plan Worker (SWPPP Worker - erosion and sediment control Laborer)
Tank Cleaning
Utiliwalk & Utilidor Laborer
Watchman (construction projects)
Window Cleaner

						L&M	LEG	
N1202	Group II, including:	33.00	8.95	20.66	1.30	0.20	0.20	64.31

Burning & Cutting Torch
Cement or Lime Dumper or Handler (sack or bulk)
Certified Erosion Sediment Control Lead (CESCL Laborer)
Choker Splicer
Chucktender (wagon, air-track & hydraulic drills)
Concrete Laborer (power buggy, concrete saws, pumpcrete nozzleman, vibratorman)
Culvert Pipe Laborer
Cured Inplace Pipelayer
Environmental Laborer (asbestos, marine work)

Class Code	Classification of Laborers & Mechanics	BHR	H&W	PEN	TRN	Other Benefits		THR
						L&M	LEG	
Laborers (The Alaska areas north of N63 latitude and east of W138 longitude)								
	*See per diem note on last page							
N1202	Group II, including:	33.00	8.95	20.66	1.30	0.20	0.20	64.31
	Floor Preparation, Core Drilling							
	Foam Gun or Foam Machine Operator							
	Green Cutter (dam work)							
	Gunite Operator							
	Hod Carrier							
	Jackhammer/Chipping Gun or Pavement Breaker							
	Laser Instrument Operator							
	Laying of Mortarless Decorative Block (retaining walls, flowered decorative block over 4 feet - highway or landscape work)							
	Mason Tender & Mud Mixer (sewer work)							
	Pilot Car							
	Pipelayer Helper							
	Plasterer, Bricklayer & Cement Finisher Tender							
	Powderman Helper							
	Power Saw Operator							
	Railroad Switch Layout Laborer							
	Sandblaster							
	Scaffold Building & Erecting							
	Sewer Caulker							
	Sewer Plant Maintenance Man							
	Thermal Plastic Applicator							
	Timber Faller, Chainsaw Operator, Filer							
	Timberman							
						L&M	LEG	
N1203	Group III, including:	33.90	8.95	20.66	1.30	0.20	0.20	65.21
	Bit Grinder							
	Camera/Tool/Video Operator							
	Guardrail Machine Operator							
	High Rigger & Tree Topper							
	High Scaler							
	Multiplate							
	Plastic Welding							
	Slurry Seal Squeegee Man							
	Traffic Control Supervisor							
	Welding Certified (in connection with laborer's work)							
						L&M	LEG	
N1204	Group IIIA	37.18	8.95	20.66	1.30	0.20	0.20	68.49
	Asphalt Raker, Asphalt Belly Dump Lay Down							
	Drill Doctor (in the field)							

Class Code	Classification of Laborers & Mechanics	BHR	H&W	PEN	TRN	Other Benefits		THR
						L&M	LEG	

Laborers (The Alaska areas north of N63 latitude and east of W138 longitude)

*See per diem note on last page

						L&M	LEG	
N1204	Group IIIA	37.18	8.95	20.66	1.30	0.20	0.20	68.49

Driller (including, but not limited to wagon drills, air-track drills, hydraulic drills)
Pioneer Drilling & Drilling Off Tugger (all type drills)
Pipelayers
Powderman (Employee Possessor)
Storm Water Pollution Protection Plan Specialist (SWPPP Specialist)
Traffic Control Supervisor, DOT Qualified

						L&M	LEG	
N1205	Group IV	21.57	8.95	20.66	1.30	0.20	0.20	52.88

Final Building Cleanup
Permanent Yard Worker

						L&M	LEG	
N1206	Group IIIB	40.97	6.24	20.66	1.30	0.20	0.20	69.57

Driller (including, but not limited to wagon drills, air-track drills, hydraulic drills)(over 5,000 hours)
Federal Powderman (Responsible Person in Charge)
Grade Checking (setting or transferring of grade marks, line and grade, GPS, drones)
Pioneer Drilling & Drilling Off Tugger (all type drills)(over 5,000 hours)
Stake Hopper

Laborers (The area that is south of N63 latitude and west of W138 longitude)

*See per diem note on last page

						L&M	LEG	
S1201	Group I, including:	32.00	8.95	20.66	1.30	0.20	0.20	63.31

Asphalt Worker (shovelman, plant crew)
Brush Cutter
Camp Maintenance Laborer
Carpenter Tender or Helper
Choke Setter, Hook Tender, Rigger, Signalman
Concrete Labor (curb & gutter, chute handler, curing, grouting, screeding)
Crusher Plant Laborer
Demolition Laborer
Ditch Digger
Dumpman
Environmental Laborer (hazard/toxic waste, oil spill)
Fence Installer
Fire Watch Laborer
Flagman
Form Stripper

Class Code	Classification of Laborers & Mechanics	BHR	H&W	PEN	TRN	Other Benefits		THR
						L&M	LEG	

Laborers (The area that is south of N63 latitude and west of W138 longitude)
*See per diem note on last page

S1201	Group I, including:	32.00	8.95	20.66	1.30	0.20	0.20	63.31

General Laborer
Guardrail Laborer, Bridge Rail Installer
Hydro-seeder Nozzleman
Laborer, Building
Landscaper or Planter
Laying of Mortarless Decorative Block (retaining walls, flowered decorative block 4 feet or less - highway or landscape work)
Material Handler
Pneumatic or Power Tools
Portable or Chemical Toilet Serviceman
Pump Man or Mixer Man
Railroad Track Laborer
Sandblast, Pot Tender
Saw Tender
Slurry Work
Steam Cleaner Operator
Steam Point or Water Jet Operator
Storm Water Pollution Protection Plan Worker (SWPPP Worker - erosion and sediment control Laborer)
Tank Cleaning
Utiliwalk & Utilidor Laborer
Watchman (construction projects)
Window Cleaner

						L&M	LEG	
S1202	Group II, including:	33.00	8.95	20.66	1.30	0.20	0.20	64.31

Burning & Cutting Torch
Cement or Lime Dumper or Handler (sack or bulk)
Certified Erosion Sediment Control Lead (CESCL Laborer)
Choker Splicer
Chucktender (wagon, air-track & hydraulic drills)
Concrete Laborer (power buggy, concrete saws, pumpcrete nozzleman, vibratorman)
Culvert Pipe Laborer
Cured Inplace Pipelayer
Environmental Laborer (asbestos, marine work)
Floor Preparation, Core Drilling
Foam Gun or Foam Machine Operator
Green Cutter (dam work)
Gunite Operator
Hod Carrier
Jackhammer/Chipping Gun or Pavement Breaker

Class Code	Classification of Laborers & Mechanics	BHR	H&W	PEN	TRN	Other Benefits		THR
						L&M	LEG	

Laborers (The area that is south of N63 latitude and west of W138 longitude)

*See per diem note on last page

						L&M	LEG	
S1202	Group II, including:	33.00	8.95	20.66	1.30	0.20	0.20	64.31

Laser Instrument Operator
Laying of Mortarless Decorative Block (retaining walls, flowered decorative block over 4 feet - highway or landscape work)
Mason Tender & Mud Mixer (sewer work)
Pilot Car
Pipelayer Helper
Plasterer, Bricklayer & Cement Finisher Tender
Powderman Helper
Power Saw Operator
Railroad Switch Layout Laborer
Sandblaster
Scaffold Building & Erecting
Sewer Caulker
Sewer Plant Maintenance Man
Thermal Plastic Applicator
Timber Faller, Chainsaw Operator, Filer
Timberman

						L&M	LEG	
S1203	Group III, including:	33.90	8.95	20.66	1.30	0.20	0.20	65.21

Bit Grinder
Camera/Tool/Video Operator
Guardrail Machine Operator
High Rigger & Tree Topper
High Scaler
Multiplate
Plastic Welding
Slurry Seal Squeegee Man
Traffic Control Supervisor
Welding Certified (in connection with laborer's work)

						L&M	LEG	
S1204	Group IIIA	37.18	8.95	20.66	1.30	0.20	0.20	68.49

Asphalt Raker, Asphalt Belly Dump Lay Down
Drill Doctor (in the field)
Driller (including, but not limited to wagon drills, air-track drills, hydraulic drills)
Pioneer Drilling & Drilling Off Tugger (all type drills)
Pipelayers
Powderman (Employee Possessor)
Storm Water Pollution Protection Plan Specialist (SWPPP Specialist)
Traffic Control Supervisor, DOT Qualified

Class Code	Classification of Laborers & Mechanics	BHR	H&W	PEN	TRN	Other Benefits		THR
Laborers (The area that is south of N63 latitude and west of W138 longitude) *See per diem note on last page								
						L&M	**LEG**	
S1205	Group IV	21.57	8.95	20.66	1.30	0.20	0.20	52.88
	Final Building Cleanup Permanent Yard Worker							
						L&M	**LEG**	
S1206	Group IIIB	40.97	6.24	20.66	1.30	0.20	0.20	69.57
	Driller (including, but not limited to wagon drills, air-track drills, hydraulic drills)(over 5,000 hours) Federal Powderman (Responsible Person in Charge) Grade Checking (setting or transferring of grade marks, line and grade, GPS, drones) Pioneer Drilling & Drilling Off Tugger (all type drills)(over 5,000 hours) Stake Hopper							
Millwrights *See per diem note on last page								
						L&M		
A1251	Millwright (journeyman)	44.00	10.08	12.28	1.10	0.40	0.05	67.91
						L&M		
A1252	Millwright Welder	45.00	10.08	12.28	1.10	0.40	0.05	68.91
Painters, Region I (North of N63 latitude) *See per diem note on last page								
						L&M		
N1301	Group I, including:	34.05	8.85	14.30	1.08	0.07		58.35
	Brush General Painter Hand Taping Hazardous Material Handler Lead-Based Paint Abatement Roll							
						L&M		
N1302	Group II, including:	34.57	8.85	14.30	1.08	0.07		58.87
	Bridge Painter Epoxy Applicator General Drywall Finisher Hand/Spray Texturing Industrial Coatings Specialist Machine/Automatic Taping Pot Tender Sandblasting							

Wage benefits key: BHR=basic hourly rate; H&W=health and welfare; IAF=industry advancement fund; LEG=legal fund; L&M=labor/management fund; PEN=pension fund; SAF=safety; SUI=supplemental unemployment insurance; S&L=SUI & LEG combined; TRN=training; THR=total hourly rate; VAC=vacation

Class Code	Classification of Laborers & Mechanics	BHR	H&W	PEN	TRN	Other Benefits	THR
Painters, Region I (North of N63 latitude) *See per diem note on last page							
						L&M	
N1302	Group II, including:	34.57	8.85	14.30	1.08	0.07	58.87
	Specialty Painter Spray Structural Steel Painter Wallpaper/Vinyl Hanger						
N1304	Group IV, including:	39.66	8.85	17.71	1.05	0.05	67.32
	Glazier Storefront/Automatic Door Mechanic						
N1305	Group V, including:	39.86	8.85	5.00	1.10	0.10	54.91
	Carpet Installer Floor Coverer Heat Weld/Cove Base Linoleum/Soft Tile Installer						
Painters, Region II (South of N63 latitude) *See per diem note on last page							
						L&M	
S1301	Group I, including :	31.19	8.85	15.15	1.08	0.07	56.34
	Brush General Painter Hand Taping Hazardous Material Handler Lead-Based Paint Abatement Roll Spray						
						L&M	
S1302	Group II, including :	32.44	8.85	15.15	1.08	0.07	57.59
	General Drywall Finisher Hand/Spray Texturing Machine/Automatic Taping Wallpaper/Vinyl Hanger						
						L&M	
S1303	Group III, including :	32.54	8.85	15.15	1.08	0.07	57.69
	Bridge Painter Epoxy Applicator Industrial Coatings Specialist Pot Tender Sandblasting						

Wage benefits key: BHR=basic hourly rate; H&W=health and welfare; IAF=industry advancement fund; LEG=legal fund; L&M=labor/management fund; PEN=pension fund; SAF=safety; SUI=supplemental unemployment insurance; S&L=SUI & LEG combined; TRN=training; THR=total hourly rate; VAC=vacation

Class Code	Classification of Laborers & Mechanics	BHR	H&W	PEN	TRN	Other Benefits		THR
Painters, Region II (South of N63 latitude) *See per diem note on last page								
						L&M		
S1303	Group III, including :	32.54	8.85	15.15	1.08	0.07		57.69
	Specialty Painter Structural Steel Painter							
						L&M		
S1304	Group IV, including:	39.87	8.85	16.75	1.08	0.07		66.62
	Glazier Storefront/Automatic Door Mechanic							
						L&M		
S1305	Group V, including:	39.86	8.85	5.00	1.10	0.10		54.91
	Carpet Installer Floor Coverer Heat Weld/Cove Base Linoleum/Soft Tile Installer							
Piledrivers *See per diem note on last page								
						L&M	**IAF**	
A1401	Piledriver	42.34	10.08	15.23	1.75	0.20	0.20	69.80
	Assistant Dive Tender Carpenter/Piledriver Rigger Sheet Stabber Skiff Operator							
						L&M	**IAF**	
A1402	Piledriver-Welder/Toxic Worker	43.34	10.08	15.23	1.75	0.20	0.20	70.80
						L&M	**IAF**	
A1403	Remotely Operated Vehicle Pilot/Technician	46.65	10.08	15.23	1.75	0.20	0.20	74.11
	Single Atmosphere Suit, Bell or Submersible Pilot							
						L&M	**IAF**	
A1404	Diver (working) **See note on last page	86.45	10.08	15.23	1.75	0.20	0.20	113.91
						L&M	**IAF**	
A1405	Diver (standby) **See note on last page	46.65	10.08	15.23	1.75	0.20	0.20	74.11
						L&M	**IAF**	
A1406	Dive Tender **See note on last page	45.65	10.08	15.23	1.75	0.20	0.20	73.11
						L&M	**IAF**	
A1407	Welder (American Welding Society, Certified Welding Inspector)	47.90	10.08	15.23	1.75	0.20	0.20	75.36
						L&M	**IAF**	
A1408	Dive Medic Technician (DMT) **See note on last page	46.65	10.08	15.23	1.75	0.20	0.20	74.11

Wage benefits key: BHR=basic hourly rate; H&W=health and welfare; IAF=industry advancement fund; LEG=legal fund; L&M=labor/management fund; PEN=pension fund; SAF=safety; SUI=supplemental unemployment insurance; S&L=SUI & LEG combined; TRN=training; THR=total hourly rate; VAC=vacation

Class Code	Classification of Laborers & Mechanics	BHR	H&W	PEN	TRN	Other Benefits		THR
	Plumbers, Region I (North of N63 latitude) *See per diem note on last page							
						L&M	**S&L**	
N1501	Journeyman Pipefitter	42.91	11.75	17.45	1.50	0.65		74.26
	Plumber							
	Welder							
	Plumbers, Region II (South of N63 latitude) *See per diem note on last page							
						L&M		
S1501	Journeyman Pipefitter	41.00	11.38	15.27	1.55	0.20		69.40
	Plumber							
	Welder							
	Plumbers, Region IIA (1st Judicial District) *See per diem note on last page							
						L&M		
X1501	Journeyman Pipefitter	39.82	13.37	11.75	2.50	0.24		67.68
	Plumber							
	Welder							
	Power Equipment Operators *See per diem note on last page							
						L&M		
A1601	Group I, including:	42.53	10.70	13.50	1.00	0.10	0.05	67.88
	Asphalt Roller: Breakdown, Intermediate, and Finish							
	Back Filler							
	Barrier Machine (Zipper)							
	Beltcrete with Power Pack & similar conveyors							
	Bending Machine							
	Boat Coxswain							
	Bulldozer							
	Cableways, Highlines & Cablecars							
	Cleaning Machine							
	Coating Machine							
	Concrete Hydro Blaster							
	Cranes (45 tons & under or 150 feet of boom & under (including jib & attachments))							
	(a) Hydralifts or Transporters, (all track or truck type)							
	(b) Derricks							
	(c) Overhead							
	Crushers							
	Deck Winches, Double Drum							
	Ditching or Trenching Machine (16 inch or over)							

Class Code	Classification of Laborers & Mechanics	BHR	H&W	PEN	TRN	Other Benefits		THR
	Power Equipment Operators *See per diem note on last page							
						L&M		
A1601	Group I, including:	42.53	10.70	13.50	1.00	0.10	0.05	67.88
	Drag Scraper, Yarder, and similar types							
	Drilling Machines, Core, Cable, Rotary and Exploration							
	Finishing Machine Operator, Concrete Paving, Laser Screed, Sidewalk, Curb & Gutter Machine							
	Grade Checker and/or Line and Grade including Drone							
	Helicopters							
	Hover Craft, Flex Craft, Loadmaster, Air Cushion, All-Terrain Vehicle, Rollagon, Bargecable, Nodwell, & Snow Cat							
	Hydro Ax, Feller Buncher & similar							
	Hydro Excavation (Vac-Truck and Similar)							
	Loaders (2 1/2 yards through 5 yards, including all attachments):							
	(a) Forklifts (with telescopic boom & swing attachment)							
	(b) Front End & Overhead, (2-1/2 yards through 5 yards)							
	(c) Loaders, (with forks or pipe clamp)							
	(d) Loaders, (elevating belt type, Euclid & similar types)							
	Material Transfer Vehicle (Elevating Grader, Pickup Machine, and similar types)							
	Mechanic, Welder, Bodyman, Electrical, Camp & Maintenance Engineer							
	Micro Tunneling Machine							
	Mixers: Mobile type with hoist combination							
	Motor Patrol Grader							
	Mucking Machine: Mole, Tunnel Drill, Horizontal/Directional Drill Operator and/or Shield							
	Off-Road Hauler (including Articulating and Haul Trucks)							
	Operator on Dredges							
	Piledriver Engineer, L.B. Foster, Puller or similar paving breaker							
	Plant Operator (Asphalt & Concrete)							
	Power Plant, Turbine Operator 200 k.w & over (power plants or combination of power units over 300 k.w.)							
	Remote Controlled Equipment							
	Scraper (through 40 yards)							
	Service Oiler/Service Engineer							
	Shot Blast Machine							
	Shovels, Backhoes, Excavators with all attachments, and Gradealls (3 yards & under)							
	Sideboom (under 45 tons)							
	Sub Grader (Gurries & similar types)							
	Tack Tractor							
	Truck Mounted Concrete Pump, Conveyor/Tele-belt, & Creter							
	Wate Kote Machine							

Class Code	Classification of Laborers & Mechanics	BHR	H&W	PEN	TRN	Other Benefits		THR
	Power Equipment Operators *See per diem note on last page							
						L&M		
A1602	Group IA, including:	44.29	10.70	13.50	1.00	0.10	0.05	69.64
	Camera/Tool/Video Operator (Slipline)							
	Certified Welder, Electrical Mechanic, Camp Maintenance Engineer, Mechanic (over 10,000 hours)							
	Cranes (over 45 tons or 150 feet including jib & attachments)							
	(a) Clamshells & Draglines (over 3 yards)							
	(b) Tower Cranes							
	Licensed Water/Waste Water Treatment Operator							
	Loaders (over 5 yards)							
	Motor Patrol Grader, Dozer, Grade Tractor (finish: when finishing to final grade and/or to hubs, or for asphalt)							
	Power Plants (1000 k.w. & over)							
	Profiler, Reclaimer, and Roto-Mill							
	Quad							
	Scrapers (over 40 yards)							
	Screed							
	Shovels, Backhoes, Excavators with all attachments (over 3 yards)							
	Sidebooms (over 45 tons)							
	Slip Form Paver, C.M.I. & similar types							
	Topside (Asphalt Paver, Slurry machine, Spreaders, and similar types)							
						L&M		
A1603	Group II, including:	41.76	10.70	13.50	1.00	0.10	0.05	67.11
	Boiler - Fireman							
	Cement Hogs & Concrete Pump Operator							
	Conveyors (except those listed in Group I)							
	Hoists on Steel Erection, Towermobiles & Air Tuggers							
	Horizontal/Directional Drill Locator							
	Locomotives, Rod & Geared Engines							
	Mixers							
	Screening, Washing Plant							
	Sideboom (cradling rock drill, regardless of size)							
	Skidder							
	Trenching Machines (under 16 inches)							
	Water/Waste Water Treatment Operator							
						L&M		
A1604	Group III, including:	41.04	10.70	13.50	1.00	0.10	0.05	66.39
	"A" Frame Trucks, Deck Winches							
	Bombardier (tack or tow rig)							
	Boring Machine							
	Brooms, Power (sweeper, elevator, vacuum, or similar)							
	Bump Cutter							

Class Code	Classification of Laborers & Mechanics	BHR	H&W	PEN	TRN	Other Benefits		THR
Power Equipment Operators								
	*See per diem note on last page							
						L&M		
A1604	Group III, including:	41.04	10.70	13.50	1.00	0.10	0.05	66.39
	Compressor							
	Farm Tractor							
	Forklift, Industrial Type							
	Gin Truck or Winch Truck (with poles when used for hoisting)							
	Hoists, Air Tuggers, Elevators							
	Loaders:							
	(a) Elevating-Athey, Barber Greene & similar types							
	(b) Forklifts or Lumber Carrier (on construction job sites)							
	(c) Forklifts, (with tower)							
	(d) Overhead & Front End, (under 2-l/2 yards)							
	Locomotives: Dinkey (air, steam, gas & electric) Speeders							
	Mechanics, Light Duty							
	Oil, Blower Distribution							
	Posthole Digger, Mechanical							
	Pot Fireman (power agitated)							
	Power Plant, Turbine Operator, (under 200 k.w.)							
	Pumps, Water							
	Roller (other than Asphalt)							
	Saws, Concrete							
	Skid Hustler							
	Skid Steer (with all attachments)							
	Stake Hopper							
	Straightening Machine							
	Tow Tractor							
						L&M		
A1605	Group IV, including:	34.83	10.70	13.50	1.00	0.10	0.05	60.18
	Crane Assistant Engineer/Rig Oiler							
	Drill Helper							
	Parts & Equipment Coordinator							
	Spotter							
	Steam Cleaner							
	Swamper (on trenching machines or shovel type equipment)							
Roofers								
	*See per diem note on last page							
						L&M		
A1701	Roofer & Waterproofer	44.62	12.75	3.91	0.81	0.10	0.06	62.25
						L&M		
A1702	Roofer Material Handler	31.23	12.75	3.91	0.81	0.10	0.06	48.86

Wage benefits key: BHR=basic hourly rate; H&W=health and welfare; IAF=industry advancement fund; LEG=legal fund; L&M=labor/management fund; PEN=pension fund; SAF=safety; SUI=supplemental unemployment insurance; S&L=SUI & LEG combined; TRN=training; THR=total hourly rate; VAC=vacation

Class Code	Classification of Laborers & Mechanics	BHR	H&W	PEN	TRN	Other Benefits	THR
Sheet Metal Workers, Region I (North of N63 latitude) *See per diem note on last page							
						L&M	
N1801	Sheet Metal Journeyman	49.04	11.85	14.61	1.80	0.12	77.42

Air Balancing and duct cleaning of HVAC systems
Brazing, soldering or welding of metals
Demolition of sheet metal HVAC systems
Fabrication and installation of exterior wall sheathing, siding, metal roofing, flashing, decking and architectural sheet metal work
Fabrication and installation of heating, ventilation and air conditioning ducts and equipment
Fabrication and installation of louvers and hoods
Fabrication and installation of sheet metal lagging
Fabrication and installation of stainless steel commercial or industrial food service equipment
Manufacture, fabrication assembly, installation and alteration of all ferrous and nonferrous metal work
Metal lavatory partitions
Preparation of drawings taken from architectural and engineering plans required for fabrication and erection of sheet metal work
Sheet Metal shelving
Sheet Metal venting, chimneys and breaching
Skylight installation

Sheet Metal Workers, Region II (South of N63 latitude) *See per diem note on last page							
						L&M	
S1801	Sheet Metal Journeyman	43.75	11.85	14.39	1.68	0.43	72.10

Air Balancing and duct cleaning of HVAC systems
Brazing, soldering or welding of metals
Demolition of sheet metal HVAC systems
Fabrication and installation of exterior wall sheathing, siding, metal roofing, flashing, decking and architectural sheet metal work
Fabrication and installation of heating, ventilation and air conditioning ducts and equipment
Fabrication and installation of louvers and hoods
Fabrication and installation of sheet metal lagging
Fabrication and installation of stainless steel commercial or industrial food service equipment
Manufacture, fabrication assembly, installation and alteration of all ferrous and nonferrous metal work
Metal lavatory partitions
Preparation of drawings taken from architectural and engineering plans required for fabrication and erection of sheet metal work
Sheet Metal shelving
Sheet Metal venting, chimneys and breaching

Class Code	Classification of Laborers & Mechanics	BHR	H&W	PEN	TRN	Other Benefits	THR
Sheet Metal Workers, Region II (South of N63 latitude) *See per diem note on last page							
S1801	Sheet Metal Journeyman	43.75	11.85	14.39	1.68	L&M 0.43	72.10
	Skylight installation						
Sprinkler Fitters *See per diem note on last page							
A1901	Sprinkler Fitter	49.10	10.55	18.05	0.52	L&M 0.25	78.47
Surveyors *See per diem note on last page							
A2001	Chief of Parties	45.16	11.83	13.14	1.15	L&M 0.10	71.38
A2002	Party Chief	43.57	11.83	13.14	1.15	L&M 0.10	69.79
A2003	Line & Grade Technician/Office Technician/GPS, Drones	42.97	11.83	13.14	1.15	L&M 0.10	69.19
A2004	Associate Party Chief (including Instrument Person & Head Chain Person)/Stake Hop/Grademan	40.85	11.83	13.14	1.15	L&M 0.10	67.07
A2006	Chain Person (for crews with more than 2 people)	36.51	11.83	13.14	1.15	L&M 0.10	62.73
Truck Drivers *See per diem note on last page							
A2101	Group I, including:	41.94	11.83	13.14	1.15	L&M 0.10	68.16
	Air/Sea Traffic Controllers						
	Ambulance/Fire Truck Driver (EMT certified)						
	Boat Coxswain						
	Captains & Pilots (air & water)						
	Deltas, Commanders, Rollagons, & similar equipment (when pulling sleds, trailers or similar equipment)						
	Dump Trucks (including rockbuggy, side dump, belly dump, & trucks with pups) over 40 yards up to & including 60 yards						
	Helicopter Transporter						
	Liquid Vac Truck/Super Vac Truck						
	Material Coordinator or Purchasing Agent						
	Ready-mix (over 12 yards up to & including 15 yards) (over 15 yards to be negotiated)						
	Semi with Double Box Mixer						

Wage benefits key: BHR=basic hourly rate; H&W=health and welfare; IAF=industry advancement fund; LEG=legal fund; L&M=labor/management fund; PEN=pension fund; SAF=safety; SUI=supplemental unemployment insurance; S&L=SUI & LEG combined; TRN=training; THR=total hourly rate; VAC=vacation

Class Code	Classification of Laborers & Mechanics	BHR	H&W	PEN	TRN	Other Benefits	THR
Truck Drivers	*See per diem note on last page						
						L&M	
A2101	Group I, including:	41.94	11.83	13.14	1.15	0.10	68.16
	Tireman, Heavy Duty/Fueler Water Wagon (250 Bbls and above)						
						L&M	
A2102	Group 1A including:	43.21	11.83	13.14	1.15	0.10	69.43
	Dump Trucks (including rockbuggy, side dump, belly dump & trucks with pups) over 60 yards up to & including 100 yards (over 100 yards to be negotiated) Jeeps (driver under load) Lowboys, including tractor attached trailers & jeeps, up to & including 12 axles (over 12 axles or 150 tons to be negotiated)						
						L&M	
A2103	Group II, including:	40.68	11.83	13.14	1.15	0.10	66.90
	All Deltas, Commanders, Rollagons, & similar equipment Batch Trucks (8 yards & up) Batch Trucks (up to & including 7 yards) Boom Truck/Knuckle Truck (over 5 tons) Cacasco Truck/Heat Stress Truck Construction and Material Safety Technician Dump Trucks (including rockbuggy, side dump, belly dump, & trucks with pups) over 20 yards up to & including 40 yards Gin Pole Truck, Winch Truck, Wrecker (truck mounted "A" frame manufactured rating over 5 tons) Mechanics Oil Distributor Driver Partsman Ready-mix (up to & including 12 yards) Stringing Truck Turn-O-Wagon or DW-10 (not self loading)						
						L&M	
A2104	Group III, including:	39.86	11.83	13.14	1.15	0.10	66.08
	Boom Truck/Knuckle Truck (up to & including 5 tons) Dump Trucks (including rockbuggy, side dump, belly dump, & trucks with pups) over 10 yards up to & including 20 yards Expeditor (electrical & pipefitting materials) Gin Pole Truck, Winch Truck, Wrecker (truck mounted "A" frame manufactured rating 5 tons & under) Greaser - Shop Semi or Truck & Trailer Thermal Plastic Layout Technician Traffic Control Technician Trucks/Jeeps (push or pull)						

Class Code	Classification of Laborers & Mechanics	BHR	H&W	PEN	TRN	Other Benefits	THR
Truck Drivers	*See per diem note on last page						
						L&M	
A2105	Group IV, including:	39.28	11.83	13.14	1.15	0.10	65.50

Air Cushion or similar type vehicle
All Terrain Vehicle
Buggymobile
Bull Lift & Fork Lift, Fork Lift with Power Boom & Swing Attachment (over 5 tons)
Bus Operator (over 30 passengers)
Cement Spreader, Dry
Combination Truck-Fuel & Grease
Compactor (when pulled by rubber tired equipment)
Dump Trucks (including rockbuggy, side dump, belly dump, & trucks with pups) up to & including 10 yards
Dumpster
Expeditor (general)
Fire Truck/Ambulance Driver
Flat Beds, Dual Rear Axle
Foam Distributor Truck Dual Axle
Front End Loader with Fork
Grease Truck
Hydro Seeder, Dual Axle
Hyster Operators (handling bulk aggregate)
Loadmaster (air & water operations)
Lumber Carrier
Ready-mix, (up to & including 7 yards)
Rigger (air/water/oilfield)
Tireman, Light Duty
Track Truck Equipment
Truck Vacuum Sweeper
Warehouseperson
Water Truck (Below 250 Bbls)
Water Truck (straight)
Water Wagon, Semi

						L&M	
A2106	Group V, including:	38.52	11.83	13.14	1.15	0.10	64.74

Buffer Truck
Bull Lifts & Fork Lifts, Fork Lifts with Power Boom & Swing Attachments (up to & including 5 tons)
Bus Operator (up to 30 passengers)
Farm Type Rubber Tired Tractor (when material handling or pulling wagons on a construction project)
Flat Beds, Single Rear Axle
Foam Distributor Truck Single Axle

Class Code	Classification of Laborers & Mechanics	BHR	H&W	PEN	TRN	Other Benefits	THR
Truck Drivers							
	*See per diem note on last page						
						L&M	
A2106	Group V, including:	38.52	11.83	13.14	1.15	0.10	64.74
	Fuel Handler (station/bulk attendant)						
	Gear/Supply Truck						
	Gravel Spreader Box Operator on Truck						
	Hydro Seeders, Single axle						
	Pickups (pilot cars & all light-duty vehicles)						
	Rigger/Swamper						
	Tack Truck						
	Team Drivers (horses, mules, & similar equipment)						
Tunnel Workers, Laborers (The Alaska areas north of N63 latitude and east of W138 longitude)							
	*See per diem note on last page						
						L&M	**LEG**
N2201	Group I, including:	35.20	8.95	20.66	1.30	0.20	0.20	66.51
	Brakeman						
	Mucker						
	Nipper						
	Storm Water Pollution Protection Plan Worker (SWPPP Worker - erosion and sediment control Laborer)						
	Topman & Bull Gang						
	Tunnel Track Laborer						
						L&M	**LEG**
N2202	Group II, including:	36.30	8.95	20.66	1.30	0.20	0.20	67.61
	Burning & Cutting Torch						
	Certified Erosion Sediment Control Lead (CESCL Laborer)						
	Concrete Laborer						
	Floor Preparation, Core Drilling						
	Jackhammer/Chipping Gun or Pavement Breaker						
	Laser Instrument Operator						
	Nozzlemen, Pumpcrete or Shotcrete						
	Pipelayer Helper						
						L&M	**LEG**
N2203	Group III, including:	37.29	8.95	20.66	1.30	0.20	0.20	68.60
	Miner						
	Retimberman						
						L&M	**LEG**
N2204	Group IIIA, including:	40.90	8.95	20.66	1.30	0.20	0.20	72.21
	Asphalt Raker, Asphalt Belly Dump Lay Down						
	Drill Doctor (in the field)						
	Driller (including, but not limited to wagon drills, air-track drills, hydraulic drills)						

Class Code	Classification of Laborers & Mechanics	BHR	H&W	PEN	TRN	Other Benefits		THR
						L&M	LEG	
Tunnel Workers, Laborers (The Alaska areas north of N63 latitude and east of W138 longitude) *See per diem note on last page								
N2204	Group IIIA, including:	40.90	8.95	20.66	1.30	0.20	0.20	72.21
	Pioneer Drilling & Drilling Off Tugger (all type drills)							
	Pipelayer							
	Powderman (Employee Possessor)							
	Storm Water Pollution Protection Plan Specialist (SWPPP Specialist)							
	Traffic Control Supervisor, DOT Qualified							
						L&M	LEG	
N2206	Group IIIB, including:	45.07	6.24	20.66	1.30	0.20	0.20	73.67
	Driller (including, but not limited to wagon drills, air-track drills, hydraulic drills)(over 5,000 hours)							
	Federal Powderman (Responsible Person in Charge)							
	Grade Checking (setting or transferring of grade marks, line and grade, GPS, drones)							
	Pioneer Drilling & Drilling Off Tugger (all type drills)(over 5,000 hours)							
	Stake Hopper							
Tunnel Workers, Laborers (The area that is south of N63 latitude and west of W138 longitude) *See per diem note on last page								
						L&M	LEG	
S2201	Group I, including:	35.20	8.95	20.66	1.30	0.20	0.20	66.51
	Brakeman							
	Mucker							
	Nipper							
	Storm Water Pollution Protection Plan Worker (SWPPP Worker - erosion and sediment control Laborer)							
	Topman & Bull Gang							
	Tunnel Track Laborer							
						L&M	LEG	
S2202	Group II, including:	36.30	8.95	20.66	1.30	0.20	0.20	67.61
	Burning & Cutting Torch							
	Certified Erosion Sediment Control Lead (CESCL Laborer)							
	Concrete Laborer							
	Floor Preparation, Core Drilling							
	Jackhammer/Chipping Gun or Pavement Breaker							
	Laser Instrument Operator							
	Nozzlemen, Pumpcrete or Shotcrete							
	Pipelayer Helper							
						L&M	LEG	
S2203	Group III, including:	37.29	8.95	20.66	1.30	0.20	0.20	68.60
	Miner							
	Retimberman							

Wage benefits key: BHR=basic hourly rate; H&W=health and welfare; IAF=industry advancement fund; LEG=legal fund; L&M=labor/management fund; PEN=pension fund; SAF=safety; SUI=supplemental unemployment insurance; S&L=SUI & LEG combined; TRN=training; THR=total hourly rate; VAC=vacation

Class Code	Classification of Laborers & Mechanics	BHR	H&W	PEN	TRN	Other Benefits		THR
	Tunnel Workers, Laborers (The area that is south of N63 latitude and west of W138 longitude) *See per diem note on last page							
						L&M	**LEG**	
S2204	Group IIIA, including:	40.90	8.95	20.66	1.30	0.20	0.20	72.21
	Asphalt Raker, Asphalt Belly Dump Lay Down Drill Doctor (in the field) Driller (including, but not limited to wagon drills, air-track drills, hydraulic drills) Pioneer Drilling & Drilling Off Tugger (all type drills) Pipelayer Powderman (Employee Possessor) Storm Water Pollution Protection Plan Specialist (SWPPP Specialist) Traffic Control Supervisor, DOT Qualified							
						L&M	**LEG**	
S2206	Group IIIB, including:	45.07	6.24	20.66	1.30	0.20	0.20	73.67
	Driller (including, but not limited to wagon drills, air-track drills, hydraulic drills)(over 5,000 hours) Federal Powderman (Responsible Person in Charge) Grade Checking (setting or transferring of grade marks, line and grade, GPS, drones) Pioneer Drilling & Drilling Off Tugger (all type drills)(over 5,000 hours) Stake Hopper							
	Tunnel Workers, Power Equipment Operators *See per diem note on last page							
						L&M		
A2207	Group I	46.78	10.70	13.50	1.00	0.10	0.05	72.13
						L&M		
A2208	Group IA	48.72	10.70	13.50	1.00	0.10	0.05	74.07
						L&M		
A2209	Group II	45.94	10.70	13.50	1.00	0.10	0.05	71.29
						L&M		
A2210	Group III	45.14	10.70	13.50	1.00	0.10	0.05	70.49
						L&M		
A2211	Group IV	38.31	10.70	13.50	1.00	0.10	0.05	63.66

*** Per diem is an established practice for this classification. This means that per diem is an allowable alternative to board and lodging if all criteria are met. See 8 AAC 30.051-08 AAC 30.056, and the per diem information on page vii of this Pamphlet.**

**** Work in combination of classifications: Employees working in any combination of classifications within the diving crew (working diver, standby diver, and tender) in a shift are paid in the classification with the highest rate for a minimum of 8 hours per shift.**

SECTION 00852 - PERMITS

PART 1 – GENERAL

1.1 INDEX OF PERMITS

A. CONTRACTOR will be required to submit a Traffic Control Plan and a CBJ Right-of-Way permit application to CBJ Engineering Department for approval at the pre-construction conference.

B. CONTRACTOR is responsible for obtaining a Construction General Permit (CGP) for storm water discharge.

C. CONTRACTOR is responsible for obtaining an Excavation Dewatering General Permit prior to dewatering work areas.

D. CONTRACTOR is responsible for obtaining a CBJ Building Permit for electrical meter main and communication control panel equipment rack.

PART 2 – PRODUCTS (Not Used)

PART 3 – EXECUTION (Not Used)

END OF SECTION

SECTION 00853 - STANDARD DETAILS

PART 1 - GENERAL

1.1 STANDARD DETAILS

A. Whenever references are made to the Standard Drawings or Standard Details in these plans or Specifications the intent is to refer to the current City and Borough of Juneau Standard Details (currently the 4th Edition dated August 2011), copies of which may be purchased from the CBJ Engineering Department.

B. City and Borough of Juneau Standard Details which specifically apply to this Project include but are not limited to the following:

LIST OF DETAILS

STANDARD DETAIL NO.	NAME OF DETAIL
104A	CULVERT HEADWALL WITH HINGED TRASH RACK
104B	CULVERT HEADWALL WITHOUT HINGED TRASH RACK
111B	CURB & GUTTER TYPES II & III
116	CANTILEVERED SINGLE MAILBOX
117	CANTILEVERED GANG MAILBOX
118	STREET LIGHTING
119A	JUNCTION BOX TYPE 1 & TYPE 1A
125	PAVEMENT RESURFACING AND TRENCH DETAIL
203	SANITARY SEWER MANHOLE TYPES I & II
205	MANHOLE HEIGHTS
206A	STANDARD MANHOLE COVER & FRAME
209	MANHOLE CONNECTION DETAILS
213	SANITARY SEWER SERVICE LATERAL
215	SANITARY SEWER CROSSING
218	COUPLING FOR DISSIMILAR SANITARY SEWER PIPES
303	STORM DRAIN MANHOLE TYPES I & II
304A	TYPE III CATCH BASIN
305	OIL WATER SEPERATOR STORM DRAIN MANHOLE
306	STORM DRAIN MANHOLE COVER & FRAME
403	FIRE HYDRANT
404	HYDRANT GUARD POSTS
405	HYDRANT PAD
406A	WATER SERVICE
407	MAINLINE VALVE
412	RIGID INSULATION

PART 2 - PRODUCTS (Not Used)

PART 3 - EXECUTION (Not Used)

END OF SECTION

The Standard Specifications for Civil Engineering Projects and Subdivision Improvements December 2003 Edition, with current Errata Sheets (Errata No. 1 thru 16), as published by the City and Borough of Juneau, is part of these Contract Documents and shall pertain to all phases of the contract. The Standard Specifications for Civil Engineering Projects and Subdivision Improvements December 2003 Edition is available for a fee from the City and Borough of Juneau Engineering Contracts Office, (907) 586-0800, or you may view them online at: www.juneau.org/engineering.

Special Provisions – Table of Contents

Section No.	Section Title	Page No.
SECTION 01010	SUMMARY OF WORK	2
SECTION 01025	MEASUREMENT AND PAYMENT	6
SECTION 01550	SITE ACCESS AND STORAGE	39
SECTION 01570	EROSION AND SEDIMENT CONTROL	39
SECTION 01600	MATERIALS AND EQUIPMENT	39
SECTION 01700	PROJECT CLOSE-OUT	42
SECTION 02202	EXCAVATION AND EMBANKMENT	47
SECTION 02203	TRENCHING	47
SECTION 02204	BASE COURSE	47
SECTION 02401	SANITARY SEWER PIPE	48
SECTION 02402	SANITARY SEWER MANHOLES AND CLEANOUTS	49
SECTION 02404	SEWAGE PUMP STATION	49
SECTION 02501	STORM SEWER PIPE	62
SECTION 02502	STORM SEWER MANHOLES, INLETS, AND CATCH BASINS	63
SECTION 02601	WATER PIPE	64
SECTION 02605	WATER SERVICES	65
SECTION 02702	CONSTRUCTION SURVEYING	65
SECTION 02709	TOPSOIL	66
SECTION 02716	REMOVE AND DISPOSE OF CULVERT PIPE	66
SECTION 02716	REMOVE AND DISPOSE OF EXISTING SANITARY SEWER AND STORM DRAINAGE SYSTEMS	67
SECTION 02717	STORM AND SANITARY STRUCTURE REMOVAL	69
SECTION 02717	REMOVE AND ABANDON EXISTING WATER SYSTEM	69
SECTION 02722	UTILITY CONDUIT RELOCATION	70
SECTION 02801	ASPHALT CONCRETE PAVEMENT	71
SECTION 03302	CONCRETE STRUCTURES	75
SECTION 03303	SIDEWALK, CURB AND GUTTER	75
SECTION 16010	ELECTRICAL SCOPE OF WORK	76
SECTION 16050	BASIC ELECTRICAL MATERIALS AND METHODS	77
SECTION 16060	GROUNDING AND BONDING	85
SECTION 16073	HANGERS AND SUPPORTS FOR ELECTRICAL SYSTEMS	87
SECTION 16075	ELECTRICAL IDENTIFICATION	92
SECTION 16120	CONDUCTORS AND CABLES	95
SECTION 16130	RACEWAYS AND BOXES	98
SECTION 16476	DISCONNECT SWITCHES AND CIRCUIT BREAKERS	105
SECTION 16521	EXTERIOR LIGHTING	109
SECTION 16900	INSTRUMENTATION AND CONTROLS	116

END OF SPECIAL PROVISIONS..... 125

***Add** the following Section*:

SECTION 01010 – SUMMARY OF WORK

PART 1 - GENERAL

1.1 GENERAL

A. The WORK to be performed under this contract shall consist of furnishing all tools, equipment, materials, supplies, manufactured articles and furnishing all labor, transportation and services, including all fuel, power, water and essential communications and performing all WORK, or other operations required for the fulfillment of the contract in strict accordance with the Contract Documents. The WORK shall be complete, and all WORK, materials, and services, not expressly indicated or called for in the Contract Documents which may be necessary for the complete and proper construction of the WORK in good faith shall be provided by the CONTRACTOR as though originally so indicated, at no increase in cost to the OWNER.

1.2 WORK COVERED BY CONTRACT DOCUMENTS

A. The WORK covered in the Contract Documents generally includes: reconstruction of Misty Lane from Horizon Drive through the cul-de-sac. WORK will include the replacement of the water main and services, replacement of existing sanitary sewer lift station, replacement of one sanitary sewer service, installation of sewer service cleanouts, and installation of new storm drain system, 2” minus shot rock with D-1 base course, asphalt pavement and other miscellaneous WORK.

B. SITE OF WORK. The site of the WORK is Misty Lane in the Bayview Subdivision near Douglas, Alaska.

1.3 WORK BY OTHERS

A. The CONTRACTOR’s attention is directed to the fact that work may be conducted at the site by other contractors during the performance of the WORK under this contract. The CONTRACTOR shall conduct its operations so as to cause a minimum of interference with the WORK of such other contractors, and shall cooperate fully with such contractors to provide continued safe access to their respective portions of the site, as required to perform work under their respective contracts.

B. Interference with Work on Utilities. The CONTRACTOR shall cooperate fully with all utility forces of the OWNER or private agencies engaged in the relocation, altering, or otherwise rearranging of any facilities which interfere with the progress of the WORK, and shall schedule the WORK so as to minimize interference with said relocation, altering, or other rearranging of facilities.

1.4 CONTRACTOR USE OF PROJECT SITE

A. The CONTRACTOR's use of the Project site shall include construction operations and storage of materials, fabrication facilities, and field offices only in those areas identified on the Drawings.

1.5 OWNER USE OF THE PROJECT SITE

A. The OWNER may utilize all or part of the existing site during the entire period of construction for the conduct of the OWNER's normal operations. The CONTRACTOR shall cooperate and coordinate with the ENGINEER to facilitate the OWNER's operations and to minimize interference with the CONTRACTOR's operation at the same time. In any event, the OWNER shall be allowed access to the Project site during the period of construction.

1.6 PROJECT MEETINGS

A. Pre-Construction Conference

1. Prior to the commencement of WORK at the site, a Pre-Construction Conference will be held at a mutually agreed time and place which shall be attended by the CONTRACTOR's Project Manager, its' Superintendent, and its' Subcontractors as the CONTRACTOR deems appropriate. Other attendees will be:

    a. ENGINEER and Inspector.
    b. Representatives of OWNER.
    c. Governmental representatives as appropriate.
    d. Others as requested by CONTRACTOR, OWNER, or ENGINEER.

2. Within 14 Days after the date of commencement as stated in the Notice To Proceed, the CONTRACTOR shall submit the following items to the ENGINEER for review. The ENGINEER will need a minimum of 7 Days to review the submittals prior to meeting for the Pre-Construction Conference. The Pre-Construction Conference will not be held unless these items have been submitted.

    a. Plan of Operation/Project Overview/Phasing.

b. A "Project Schedule" in Critical Path Method (CPM), Gantt, or Bar Chart Schedule format acceptable to the ENGINEER that details all mobilization/demobilization, major work phases, periods of planned shutdowns, working and non-working days, and physical WORK activities that will occur on-site. Approval of the Project Schedule is required prior to commencing on-site WORK activities.
c. Traffic Control Plan(s) and Traffic Control Personnel certifications.

3. Unless previously submitted to the ENGINEER, the CONTRACTOR shall bring to the Pre-Construction Conference one copy each of the following:

   a. Procurement schedule of major equipment, materials and items requiring long lead time.
   b. Shop Drawing/Sample/Substitute or "Or Equal" submittal schedule.
   c. Name and telephone number of CONTRACTOR's Project Supervisor.
   d. Erosion Control Plan with Storm Water Pollution Prevention Plan and Notice of Intent as filed with ADEC (if applicable).
   e. Certified BMP Plan for Excavation Dewatering and Notice of Intent as filed with ADEC (if applicable)

4. The purpose of the Pre-Construction Conference is to designate responsible personnel and establish a working relationship. Matters requiring coordination will be discussed and procedure for handling such matters established. The complete agenda will be furnished to the CONTRACTOR prior to the meeting date. The CONTRACTOR should be prepared to discuss all of the items listed below:

   a. Status of CONTRACTOR's insurance and bonds.
   b. CONTRACTOR's Project Schedule.
   c. Transmittal, review, and distribution of CONTRACTOR's submittals.
   d. Processing applications for payment.
   e. Maintaining record documents.
   f. Critical WORK sequencing and long lead time items.
   g. Field decisions and Change Orders.
   h. Use of Project site, office and storage areas, security, housekeeping, and OWNER's needs.
   i. Major equipment deliveries and priorities.
   j. CONTRACTOR's assignments for safety and first aid.

5. The OWNER will preside at the Pre-Construction Conference and will arrange for keeping and distributing the minutes to all persons in attendance.

6. The CONTRACTOR and its Subcontractors should plan on the conference taking no longer than three hours. Items listed in paragraph 3 will be covered as well as a review of the Drawings and Specifications with the ENGINEER and OWNER.

B. Progress Meetings

1. The CONTRACTOR shall schedule and hold regular on-site progress meetings at least weekly and at other times as requested by the ENGINEER, or as required by the progress of the WORK. The CONTRACTOR, ENGINEER, and all Subcontractors active on the site must attend each meeting. CONTRACTOR may at its discretion request attendance by representatives of its Suppliers, manufacturers, and other Subcontractors.

2. The ENGINEER shall conduct the meeting and will arrange for recording and distributing the minutes. The purpose of the meetings will be to review the progress of the WORK, maintain coordination of efforts, discuss changes in scheduling, and resolve other problems which may develop. During each meeting, the CONTRACTOR is required to present any issues which may impact the WORK, with a view toward resolving these issues expeditiously.

1.7 DEFINITIONS APPLICABLE TO TECHNICAL SPECIFICATIONS

A. The following words have the meaning defined in the Technical Portions of the WORK:

1. **Furnish** - means to supply and deliver to the site, to unload and unpack ready for assembly, installation, testing, and start-up.
2. **Indicated** - is a word used to direct the CONTRACTOR to information contained on the drawings or in the Specifications. Terms such as “shown”, “noted”,” “scheduled”, and “specified” also may be used to assist in locating information but no limitation of location is implied or intended.
3. **Install** - defines operations at the site including assembly, erection, placing, anchoring, applying, shaping to dimension, finishing, curing, protecting, and cleaning, ready for the OWNER’s use.
4. **Installer** - a person or firm engaged by the CONTRACTOR or its subcontract, or any Subcontractor, for the performance of installation, erection, or application WORK at the site. Installers must be expert in the operations they are engaged to perform.

5. **Provide** - is defined as furnish and install, ready for the intended use.

PART 2 - PRODUCTS (Not Used)

PART 3 - EXECUTION (Not Used)

END OF SECTION

***Add** the following Section*:

SECTION 01025 – MEASUREMENT AND PAYMENT

PART 1 - GENERAL

1.1 SCOPE

A. Payment for the various items of the Bid Schedule, as further specified herein, shall include all compensation to be received by the CONTRACTOR for furnishing all tools, equipment, supplies, and manufactured articles, and for all labor, operations, and incidentals appurtenant to the items for WORK being described, as necessary to complete the various items of the WORK all in accordance with the requirements of the Contract Documents, including all appurtenances thereto, and including all costs of permits and cost of compliance with the regulations of public agencies having jurisdiction, including Safety and Health Requirements of Occupational Safety and Health Administration of the U.S. Department of Labor (OSHA) and Occupational Safety and Health Standards of the Alaska Department of Labor, Division of Labor Standards and Safety.

B. No separate payment will be made for any Pay Item that is not specifically set forth in the Bid Schedule, and all costs therefore shall be included in the prices named in the Bid Schedule for the various appurtenant items of WORK.

C. In addition to the other incidental items of WORK listed elsewhere in the contract, the following items shall also be considered as incidental to other items of WORK under this contract:

1. Maintenance of all services through the Project area including power, water, storm and sanitary sewers, garbage pickup, mail delivery, and emergency vehicles.
2. Repair or replacement of existing adjacent facilities including piping, landscaping, steel, timber, concrete and asphalt items, if damaged by the CONTRACTOR.
3. Final clean-up and site restoration.

4. All WORK necessary for coordination of work to be accomplished by the private utility companies and property owners within the Project limits.
5. Removal and replacement of survey monuments and markers disturbed during construction, whether shown on the Drawings or not.
6. Watering of the roadway as necessary for dust control.
7. All fittings required for storm, water and sanitary sewer pipes.
8. Usable material from excavation placed and compacted as embankment or fill within the project limits.
9. Crack sealing all joints following paving operations.
10. All WORK required to notify utility users of pending utility shutdowns, traffic changes and disruptions, and road closures.
11. All sawcutting required for connections to existing asphalt pavement surfaces, concrete surfaces and concrete curbs.
12. Sheeting, shoring, and bracing as required.
13. Placement and compaction of useable excavation behind the new concrete curb and gutter, including restoration and grading of all disturbed areas as necessary to provide a smooth transition to existing surfaces adjacent to the project.
14. Furnishing and installing all temporary construction fencing or safety barrier and clearly identified temporary pedestrian pathways necessary during construction.
15. All WORK related to dewatering including providing necessary pumps, temporary piping, sump drain rock, installing well points, sumps and French drains and other control measures to keep trench excavations for underground utilities and structures free of water.
16. Any clearing and grubbing necessary for performance of the WORK, including removal and disposal of trees and vegetation where shown on the Drawings and directed by the ENGINEER.
17. Any removal and resetting of existing mailboxes and sign assemblies, unless otherwise indicated in the Drawings or directed by the ENGINEER.

1.2 MOBILIZATION (Pay Item No. 1505.1) PRICE BASED ON LUMP SUM

A. Payment for Mobilization is prerequisite upon acceptance of a Project Schedule meeting the requirements of Section 01010 – Summary of Work, Part 1.6.A.2.b and the completion of the entire WORK as a Lump Sum Pay Unit, complete, all in accordance with the requirements of the Contract Documents.

B. Payment for Mobilization will be made at the amount listed on the Bid Schedule under Pay Item No. 1505.1, payment of which will constitute full compensation for all WORK described in Section 01505 - Mobilization, as shown on the Drawings and as directed by the ENGINEER.

C. Partial payments will be made as the WORK progresses as follows:

1. When 5% of the total original contract amount is earned from other Pay Items, 50% of the amount bid for Mobilization, or 5% of the original contract amount, whichever is lesser, will be paid.
2. When 10% of the total original contract amount is earned from other Pay Items, 100% of the amount bid for Mobilization, or 10% of the original contract amount, whichever is lesser, will be paid.
3. Upon completion of all WORK on the Project, payment of any amount bid for Mobilization in excess of 10% of the total contract amount will be paid.
4. No payments for this Pay Item will be made unless a Project Schedule has been prepared/provided by the CONTRACTOR and accepted by the ENGINEER.

1.3 EROSION AND SEDIMENT CONTROL (Pay Item No. 1570.1) PRICE BASED ON LUMP SUM

A. Measurement for payment for Erosion and Sediment Control will be based upon the completion of the entire WORK as a Lump Sum Pay Unit, complete, all in accordance with the requirements of the Contract Documents.

B. WORK under this Pay Item includes all requirements described in Section 01570, including but not limited to obtaining all necessary permits, including permit fees and permit application costs, for storm water control and excavation dewatering as required by the Alaska Department of Conservation and the Environmental Protection Agency. This includes furnishing, installing and maintaining all measures required by those permits. This also includes sweeping and vacuuming of Misty Lane and Horizon Drive as effected by the Project.

C. Payment for Erosion and Sediment Control will be made at the Unit Price amount listed in the Bid Schedule under Pay Item No. 1570.1, payment of which will constitute full compensation for all WORK described in Section 01570 – Erosion and Sediment Control, as shown on the Drawings and as directed by the ENGINEER.

2.1 EXCAVATION (Pay Item No. 2202.1) PRICE BASED ON QUANTITY, CUBIC YARD

A. Measurement for payment for Excavation will be based on the number of cubic yards of unclassified material actually excavated, as determined by the average end area method. Where impractical to measure by the average end area method, the ENGINEER may approve other acceptable methods involving three-dimensional measurements. Excavation outside of the

subcut limits indicated in the Drawings, or as directed by the ENGINEER will not be measured for payment.

B. No deduction in the measurement for Excavation will be made for the trenching required for pipe and structure installations above the bottom of, or within the subcut limits as shown on the Typical Sections.

C. Measurement for payment may be selected by the CONTRACTOR from one of the following methods:

1. From actual cross sections taken by the CONTRACTOR's surveyor (following pavement and concrete curbing, slabs or sidewalk removal where present), with the lower limits determined by the neat line subcut limits as indicated on the Typical Sections, or as directed by the ENGINEER.
2. The CONTRACTOR may review and utilize the ENGINEER's design earthwork quantity computations in lieu of providing its own quantity determinations.

D. Additional trench excavation directed by the ENGIEER greater than 6-inches below the invert of the storm drain pipe, sewer utility pipe or water utility pipe will be measured for payment under this pay item. Measurement will be based on the number of yards actually excavated and will be limited to a depth of 2-feet.

E. The following will not be measured for direct payment; the cost of such WORK will be considered incidental to other WORK under the contract:

1. Overburden and other spoil material from borrow sources.
2. Removal of water by aeration of material to obtain required moisture content.
3. Any volumes of water or other liquid material.
4. Material used for the purpose other than directed.
5. Roadbed material scarified in place and not removed.
6. Material excavated when benching.
7. Slide or slipout material attributable to the carelessness of the CONTRACTOR.
8. The volume of conserved materials stockpiled at the option of the CONTRACTOR, including any and all labor, materials, or equipment necessary for maintaining stockpiles to ensure the suitability of excavated materials deemed usable.
9. Placement of usable, or otherwise suitable material from excavation, as determined by the ENGINEER, into the new roadway and sidewalk as embankment or selected embankment, or as embankment for any areas outside the roadway subcut within the project limits.

F. Payment for Excavation will be made at the Unit Price named in the Bid Schedule under Pay Item No. 2202.1, payment of which will constitute full compensation for all WORK described in Section 02202 - Excavation and Embankment, as shown on the Drawings and as directed by the ENGINEER.

2.2 SIDESLOPES AND DITCH GRADING (Pay Item No. 2202.2) PRICE BASED ON LUMP SUM PAY UNIT

A. Measurement for payment for Sideslopes and Ditch Grading will be based on the completion of the entire WORK as a Lump Sum Pay Unit, complete, including all excavation and placement of useable material from excavation into the sideslope, ditch, and swale areas, all in accordance with the requirements of the Contract Documents.

B. This Pay Item will include all WORK, including excavation, backfill with usable material from roadway and trench excavation, and all grading outside the shoulder limits as necessary to construct sideslopes, ditches, swales, and other graded areas, as shown on the Drawings and as directed by the ENGINEER.

C. Payment for Sideslopes and Ditch Grading will be made at the amount named in the Bid Schedule under Pay Item No. 2202.2, which payment will constitute full compensation for all WORK described in Section 02202 – Excavation and Embankment, as shown on the Drawings and as directed by the ENGINEER.

2.3 ROAD CLEANING AND MINING AREA RESTORATION GUARANTEE (Pay Item No. 2202.3) PRICE BASED ON CONTINGENT SUM

A. Measurement for this Item will be made as a Contingent Sum Pay Unit for completion of Road Cleaning and Mining Area Restoration.

B. The CONTRACTOR shall be responsible for removal of dirt, mud, rocks and other debris from CBJ and State Right-of-Ways accumulated from quarry operations and hauling to and from the project job site and also Contractor’s operations in CBJ material sources. It is the intent that the traveled public way be kept clean (including dust) and to avoid unsafe traffic conditions. If the CONTRACTOR fails to perform necessary road cleaning in a timely manner, no later than the end of each work day, the CBJ may hire outside forces to perform the WORK and deduct the cost from this contract, beginning with the funds remaining within this contingent sum pay item.

C. The CONTRACTOR shall execute a site specific *User Agreement,* which includes terms and conditions for mining and processing of material, with CBJ Engineering Department Material Sources Management prior to

beginning operations in CBJ's Material Sources. The CONTRACTOR shall be responsible for restoration of their mining area in accordance with the conditions of the *User Agreement*. If the CONTRACTOR fails to perform the required mining area restoration, the CBJ may hire outside forces to perform the WORK and deduct the cost from this contract, beginning with the funds remaining within this contingent sum pay item.

D. Release of final payment for Road Cleaning and Mining Area Restoration Guarantee will be made upon determination of completeness by the ENGINEER after deduction of OWNER incurred costs for necessary road cleaning and/or mining area restoration not completed in a timely manner by the CONTRACTOR.

E. Payment for Road Cleaning and Mining Area Restoration Guarantee will be made at the amount named in the Bid Schedule under Pay Item No. 2202.3, less any deductions for Road Cleaning or Mining Area Restoration completed by CBJ or a third party on behalf of CBJ, payment of which will constitute full compensation for all WORK described in section 02202 – Excavation and Embankment, as shown on the Drawings and as directed by the ENGINEER.

2.4 2-INCH MINUS SHOT ROCK w/BASE COURSE (Pay Item No. 2204.1) PRICE BASED ON QUANTITY, CUBIC YARD

A. 2-Inch Minus Shot Rock w/Base Course will be measured by the number of cubic yards of material in place as determined by the average end area method, and will be determined on a neat line basis. Where impractical to measure by the average end area method, the ENGINEER may approve other acceptable methods involving three-dimensional measurements. Material outside of the lines, grades and cross sections indicated in the Drawings, or as directed by the ENGINEER, will be deducted from 2-Inch Minus Shot Rock w/Base Course quantities for pay purposes.

B. Base Course, Grading D-1, may be used under the driveways, and curb as a substitute for 2-Inch Minus Shot Rock w/Base Course as a no cost change. This material will be measured for payment under this pay item.

C. Water needed for compaction and added to the base material on the grade will be considered incidental.

D. Below roadway pavement, 2-Inch Minus Shot Rock will be placed and compacted into a layer 7.5-inches to 8.5-inches thick, and covered with Base Course, for a total thickness of 9.5-inches for the areas under the roadway pavement as shown on the Drawings. Both of these materials will be measured for payment under this Pay Item. 2-Inch Minus Shot Rock shall meet the requirements of Section 2202 – Excavation and Embankment.

E. For roadway shoulders, 2-Inch Minus Shot Rock will be placed and compacted into a layer 10-inches to 11-inches thick, and covered with Base Course, for a total thickness of 12-inches. Both of these materials will be measured for payment under this Pay Item. 2-Inch Minus Shot Rock shall meet the requirements of Section 2202 – Excavation and Embankment.

F. Payment for 2-Inch Minus Shot Rock w/Base Course, will be made at the Unit Price named in the Bid Schedule under Pay Item No. 2204.1, payment of which will constitute full compensation for all WORK described in Section 2204 – Base Course, as shown on the Drawings and as directed by the ENGINEER.

2.5 BASE COURSE, GRADING D-1 FOR DRIVEWAYS (Pay Item No. 2204.2) PRICE BASED ON QUANTITY, TON

A. Base Course, Grading D-1 for Driveways and fire hydrant pads shall be measured by the ton delivered and placed in accordance with these Specifications and as shown on the Drawings. Said measurement may include moisture up to a maximum of 7.0% of dry weight of the material.

B. When check tests by the ENGINEER indicate that moisture content in excess of 7.0% may be occurring, the frequency of testing will be increased as necessary and the results averaged. When this average tested moisture content is greater than 7.0%, the tonnage, as measured over the period tested, shall be reduced by a percentage equal to the difference between the actual moisture content and 7.0%. No credit will be due the CONTRACTOR when moisture content is less than 7.0%. Samples for determination of moisture content shall be collected at the point of weighing.

C. Water needed for compaction and added to the base material on the grade will be considered incidental.

D. Payment for Base Course, Grading D-1 for Driveways, will be made at the Unit Price named in the Bid Schedule under Pay Item No. 2204.2, payment of which will constitute full compensation for all WORK described in Section 02204 – Base Course, as shown on the Drawings and as directed by the ENGINEER.

2.6 LOCATE SANITARY SEWER SERVICES (Pay Item No. 2401.1) PRICE BASED ON LUMP SUM

A. Measurement for payment for Locate Sanitary Sewer Services will be based upon the completion of the entire WORK as a Lump Sum Pay Unit, complete, all in accordance with the requirements of the Contract Documents.

B. WORK under this Item includes all excavation and backfill, and other WORK necessary to determine the location of all existing sewer services prior to installation of the new sewer services, cleanouts, and water system improvements. Elevation checks shall be made with the new water and storm drain system piping to determine if pipe conflicts exist. If pipe conflicts exist, data shall be submitted to the ENGINEER so that a solution can be provided to the Contractor.

C. This WORK is also required so that all existing sewer service locations are known prior to installation of new sewer services.

D. Payment for Locate Sanitary Sewer Services will be made at the amount named in the Bid Schedule under pay Item No. 2401.1, payment of which will constitute full compensation for all WORK described in Section 02401 – Sanitary Sewer Pipe, as shown on the Drawings and as directed by the ENGINEER.

2.7 SERVICE CONNECTIONS AND LATERALS (Pay Item No. 2401.2) PRICE BASED ON QUANTITY, EACH

A. Service Connections and Laterals will be measured per each, complete in place, including pipe, wyes, cleanouts and ductile iron or cast iron frame and cover with "SEWER" cast on it, fittings, and adapters, as required to connect to mainline sewer and existing service at the property line, trench excavation, bedding, backfill, imported backfill, sewer warning tape, dewatering, cleaning and testing, and all other items necessary for a complete installation.

B. The determination of the connection point to the existing service pipe will be made by the ENGINEER at the time the existing service pipe has been exposed to view. The CONTRACTOR shall proceed with trenching towards the residence until the ENGINEER has determined a suitable connection point is reached.

C. Payment for Sewer Connections and Laterals will be made at the Unit Price named in the Bid Schedule under Pay Item No. 2401.2, payment of which will constitute full compensation for all WORK described in Section 2401 – Sanitary Sewer Pipe, as shown on the Drawings and as directed by the ENGINEER.

2.8 SANITARY SEWER SERVICE CLEANOUT (Pay Item No. 2401.3) PRICE BASED ON QUANTITY, EACH

A. Sanitary Sewer Service Cleanout will be measured per each, complete in place, including cleanouts and ductile iron or cast iron frame and cover, with "SEWER" cast on it, non-shear coupling and fittings, as required to connect

to existing sanitary sewer service at the property line in accordance with the requirements of the Contract Documents

B. Trench excavation, bedding, backfill, imported backfill, warning tape, trench shoring and bracing, will be considered incidental to the WORK.

C. Cleanouts installed under Pay Item 2401.2 will not be measured for payment under this Pay Item.

D. Payment for Sanitary Sewer Service Cleanout will be made at the Unit Price named in the Bid Schedule under Pay Item No. 2401.3, payment of which will constitute full compensation for all WORK described in Section 2401 – Sanitary Sewer Pipe, as shown on the Drawings and as directed by the ENGINEER.

2.9 ADJUST SANITARY SEWER MANHOLE TO GRADE (Pay Item No. 2402.1) PRICE BASED ON QUANTITY, EACH

A. Adjust Sanitary Sewer Manhole to Grade will be measured per each, complete in place, including removal of existing frame and cover and installation of new frame and cover, providing all adjustment rings, infra-risers, and adjusting to grade.

B. All WORK required to reset the frame and cover to grade if not installed to proper grade tolerances during paving operations, including construction of a concrete transition slab with pavement overlay, if necessary, will be considered incidental to other work under this Contract.

C. Contractor shall use only approved materials and labor as directed by the ENGINEER.

D. Payment for Adjust Sanitary Sewer Manhole to Grade will be made at the Unit Price named in the Bid Schedule under Pay Item No. 2402.1, payment of which will constitute full compensation for all WORK described in Section 2402 – Sanitary Sewer Manholes and Cleanouts Inlets and Catch Basins, as shown on the Drawings and as directed by the ENGINEER.

2.10 SANITARY SEWER LIFT STATION (Pay Item No. 2404.1) PRICE BASED ON LUMP SUM

A. Measurement for payment of Sanitary Sewer Lift Station will be based upon the completion of the entire WORK as a Lump Sum Pay Unit, complete, all in accordance with the requirements of the Contract Documents.

B. Sanitary Sewer Lift Station shall include but not be limited to; all wet well piping to the force main, required trenching, backfill, imported backfill, compaction, the reinforced concrete pad above the wet well, bollards, and

water proofing; all pipe, valves, fittings, pumps, control panels, all associated electrical work, rails, equipment, supports, vent pipe, concrete penetrations and seals, nuts, bolts, and other miscellaneous items necessary for a complete installation; all testing, warranties, operation and technical data as required; dewatering, and any other material and WORK necessary for a complete, working and acceptable installation.

C. Payment for Sanitary Sewer Lift Station includes furnishing one complete spare pump motor and delivering to CBJ Wastewater.

D. Payment for Sanitary Sewer Lift Station will be made at the amount shown in the Bid Schedule under Pay Item No. 2404.1, which payment will constitute full compensation for all WORK described in SECTION 2404 – SEWAGE PUMP STATION, as described in the Contract Documents and as directed by the ENGINEER.

2.11 SANITARY SEWER BYPASS PUMPING (Pay Item No. 2404.2) PRICE BASED ON LUMP SUM

A. Measurement for payment of Sanitary Sewer Bypass Pumping will be based upon the completion of the entire WORK as a Lump Sum Pay Unit, complete all in accordance with the requirements of the Contract Documents.

B. Bypass pumping shall include all labor and materials, detailed in the plans and specifications, and those incidental as required to complete the work in a safe manner to ensure continuous sewer service to the upstream sewer basins from the existing Misty Lane Pump Station for the duration of construction.

C. Payment for Sanitary Sewer Bypass Pumping will be made at the amount shown in the Bid Schedule under Pay Item No. 2404.2, which payment will constitute full compensation for all WORK described in SECTION 2404 – SEWAGE PUMP STATION, as described in the Contract Documents and as directed by the ENGINEER.

2.12 [diameter]-INCH CPP PIPE CULVERT (Pay Item Nos. 2501.1 and 2501.2) PRICE BASED ON QUANTITY, LINEAR FOOT

A. Culverts Pipes, including all coupling bands, bends and other items necessary for the proper joining of the culvert pipe sections, will be measured by the staked length in linear feet.

B. Pipes for storm drains shall be measured by the staked length, from center to center of structures or to ends of pipe if no structure is present. No deduction shall be made for footage through inlets, catch basins or manholes.

C. Branch connections, coupling adapters and bends will be included in the linear foot measurement of this Pay Item.

D. The WORK under this Pay Item includes connecting to existing storm drain mains, services and storm drain structures at locations shown on the Drawings or as required to intercept unknown underground drainage pipes and flows.

E. Trench excavation, bedding, backfill, imported backfill, warning tape, capping and marking ends of culvert pipe stub outs, and compaction of bedding and backfill will not be measured for payment, but will be considered incidental to other WORK.

F. Payment for 12-Inch CPP Pipe Culvert will be made at the Unit Price named in the Bid Schedule under Pay Item No. 2501.1, payment of which will constitute full compensation for all WORK described in Section 02501 - Storm Sewer Pipe, as shown on the Drawings and as directed by the ENGINEER.

G. Payment for 18-Inch CPP Pipe Culvert will be made at the Unit Price named in the Bid Schedule under Pay Item No. 2501.2, payment of which will constitute full compensation for all WORK described in Section 02501 - Storm Sewer Pipe, as shown on the Drawings and as directed by the ENGINEER.

2.13 6-INCH UNDERDRAIN (Pay Item No. 2501.3) PRICE BASED ON QUANTITY, LINEAR FOOT

A. Underdrain pipe, including all coupling bands and other items necessary for the proper joining of the pipe sections, will be measured by the staked length.

B. Underdrain pipe will be measured from center of structures or ends of pipe, as shown on the Drawings, or as directed by the ENGINEER.

C. WORK under this Pay Item includes 6-Inch Underdrains installed at the locations shown on the Drawings, or as directed by the ENGINEER.

D. Pipe perforations, 2-inch minus shot rock, filter cloth, cleanouts, ductile iron or cast iron frame and cover, with “STORM” cast on it, and end caps will not be measured for payment, but will be considered incidental to this Pay Item.

E. Excavation, bedding, and backfill will not be measured for payment, but will be considered incidental to other WORK.

F. Payment for 6-Inch Underdrain will be made at the Unit Price named in the Bid Schedule under Pay Item No. 2501.3, payment of which will constitute full compensation for all WORK described in Section 02501 – Storm Sewer Pipe, as shown on the Drawings, and as directed by the ENGINEER.

2.14 STORM DRAIN MANHOLE, TYPE I WITH OIL-WATER SEPARATOR (Pay Item No. 2502.1) PRICE BASED ON QUANTITY, EACH

A. Storm Drain Manhole, Type I with Oil-Water Separator will be measured per each, complete in place, including oil-water separator, all excavation, 24-inch thick 2" minus shot rock pad, dewatering, bedding, backfill, imported backfill, grouting, temporary bypass pumping, frames and grates or covers, as shown on the Drawings.

B. WORK under this Item includes connecting to existing and proposed storm drain culverts, drain pipes, underdrains, and other conduits as shown on the Drawings and as directed by the Engineer.

C. All diameters, types and lengths of culvert and storm drain pipe, used for connecting existing conveyance pipes and structures to new storm drain manholes, will not be measured for payment and is considered incidental to the WORK under this Pay Item, unless otherwise indicated on the Drawings.

D. Payment for Storm Drain Manhole, Type I with Oil-Water Separator, will be made at the Unit Price named in the Bid Schedule under Pay Item No. 2502.1, payment of which will constitute full compensation for all WORK described in Section 02502 – Storm Sewer Manholes, Inlets and Catch Basins, as shown on the Drawings, and as directed by the ENGINEER.

2.15 CATCH BASIN, TYPE III (Pay Item No. 2502.2) PRICE BASED ON QUANTITY, EACH

A. Catch Basins will be measured per each, complete in place, including all excavation, 24-inch thick 2" minus shot rock pad, dewatering, bedding, backfill, imported backfill, grouting, temporary bypass pumping, frames and grates or covers, as shown on the Drawings.

B. WORK under this Item includes connecting to existing and proposed storm drain culverts, drain pipes, underdrains, and other conduits as shown on the Drawings and as directed by the Engineer.

C. All diameters, types and lengths of culvert and storm drain pipe, used for connecting existing conveyance pipes and structures to new storm drain catch basins, will not be measured for payment and is considered incidental to the WORK under this Pay Item, unless otherwise indicated on the Drawings.

D. Payment for Catch Basin, Type III will be made at the Unit Price named in the Bid Schedule under Pay Item No. 2502.2, payment of which will constitute full compensation for all WORK described in Section 02502 - Storm Sewer Manholes, Inlets and Catch Basins, as shown on the Drawings and as directed by the ENGINEER.

2.16 10-INCH HDPE WATER PIPE (Pay Item No. 2601.1) PRICE BASED ON QUANTITY, LINEAR FOOT

A. Measurement of water pipe will be made along the slope of the HDPE water pipe from the centers of fittings and valves in linear feet. No deduction in length will be made for valves, fittings, or HDPE fused reducers. No measurement for payment will be made for any ductile iron water pipe used to make up the overall connection, only HDPE water pipe will be measured for payment. All fittings, other than valves, required for satisfactory installation of water pipe will be considered incidental to this Pay Item.

B. All trench excavation, bedding, backfill, imported backfill, sheeting and bracing, dewatering, cleaning and testing, warning tape, tracer wire, concrete thrust blocks, compaction and all other items necessary for a complete installation will not be measured for payment, but will be considered incidental to other WORK.

C. Payment for 10-Inch HDPE Water Pipe will be made at the Unit Price named in the Bid Schedule under Pay Item No. 2601.1, which payment will constitute full compensation for all WORK described in Section 02601 - Water Pipe, as shown on the Drawings and as directed by the ENGINEER.

2.17 CONNECT TO EXISTING WATER PIPE (Pay Item No. 2601.2) PRICE BASED ON QUANTITY, EACH

A. Measurement for payment of Connect to Existing Water Pipe will be based on the actual quantity, each, of such connections made to existing water pipe and installed in accordance with the requirements of the Contract Documents.

B. The WORK under this Pay Item includes all excavation, backfill, imported backfill, cutting and removing sections of existing water pipe, and all materials including new tees, couplers, reducers, mechanical joint adapters, bands, fittings, joint restraints, butt fusing new HDPE pipe to existing HDPE pipe, concrete thrust blocks, and all other WORK and materials necessary to complete connections of new water pipe to existing water pipes.

C. Payment for Connect to Existing Water Pipe will be made at the Unit Price named in the Bid Schedule under Pay Item No. 2601.2, payment of which

will constitute full compensation for all WORK described in Section 02601 – Water Pipe, as shown on the Drawings and as directed by the ENGINEER.

2.18 TEMPORARY WATER SYSTEM (Pay Item No. 2601.3) PRICE BASED ON LUMP SUM

A. Measurement for payment for Temporary Water System will be based upon the completion of the entire WORK as a Lump Sum Pay Unit, complete, all in accordance with the requirements of the Contract Documents.

B. The WORK under this Pay Item includes all plan submittals, furnishing and installing temporary NSF 61 approved water pipe, fittings, connections, disinfection, testing, residential notification, coordination with CBJ Water Department, isolating individual water services that do not have curb stops or where curb stops/valve boxes were not able to be located and all other items of WORK necessary for complete installation, operation and disassembling of a temporary water system.

C. Payment for Temporary Water System will be made at the amount shown in the Bid Schedule under Pay Item No. 2601.3, payment of which will constitute full compensation for all WORK described in Section 02601 – Water Pipe, as shown on the Drawings and as directed by the ENGINEER.

2.19 FIRE HYDRANT ASSEMBLY WITH ACCESS PAD (Pay Item No. 2603.1) PRICE BASED ON QUANTITY, EACH

A. Measurement for payment of Fire Hydrant Assembly with Access Pad will be the actual number of fire hydrant assemblies satisfactorily installed, complete in place.

B. A Fire Hydrant Assembly includes the fire hydrant, thrust block, eight-inch gate valve, valve box, adjustment of valve box, 8-inch and 6-inch DI pipe from the gate valve to the barrel (including 8x6 DI reducer), barrel extension (if required), galvanic anodes, threaded zinc anode caps, installation of fire hydrant matching color painted guard posts, hydrant flag, joint restraints, tracer wires, warning tapes, and any other required fittings, including pipe, to connect the hydrant leg from the mainline water pipe to the fire hydrant or from the stubbed water pipe to the fire hydrant as shown on the Drawings.

C. Hydrant access pad shall include all excavation, backfill, imported backfill and sideslope grading. Base course grading D-1 will be paid for under Pay Item No. 2204.2 Base Course, Grading D-1.

D. Asphalt pad will be paid for under Pay Item No. 2801.1 A.C. Pavement, Type II-A, Class B.

E. Payment for Fire Hydrant Assembly with Access Pad will be made at the Unit Price named in the Bid Schedule under Pay Item No. 2603.1, payment of which will constitute full compensation for all WORK described in Section 02603 – Fire Hydrants, as shown on the Drawings and as directed by the ENGINEER.

2.20 LOCATE WATER SERVICES (Pay Item No. 2605.1) PRICE BASED ON LUMP SUM

A. Measurement for payment for Locate Water Services will be based upon the completion of the entire WORK as a Lump Sum Pay Unit, complete, all in accordance with the requirements of the Contract Documents.

B. The WORK under this Pay Item includes all excavation, backfill and other WORK required to locate and expose existing water service valve boxes and locating the existing water services so that connections to new water services can be made. Some Existing water service boxes have not been field located due to limited as-built information. Some service locations shown on the Drawings are assumed and should be field confirmed by the CONTRACTOR.

C. Payment for Locate Water Services will be made at the Unit Price named in the Bid Schedule under Pay Item No. 2605.1, payment of which will constitute full compensation for all WORK described in Section 02605 – Water Services, as shown on the Drawings and as directed by the ENGINEER.

2.21 1-INCH POLY WATER SERVICE (Pay Item No. 2605.2) PRICE BASED ON QUANTITY, EACH

A. Measurement for payment for insulated water services will be the actual number of insulated water services satisfactorily installed from the water main line to the property line or as shown on the Drawings, and as directed by the Engineer.

B. A water service includes the curb stop, service box, corporation stop, trace wires and splice connectors, service saddle, required fittings, pipe unions and fittings for connecting to dissimilar pipe sizes and materials, warning tape, service pipe, and all WORK necessary to install the service to the locations as shown on the Drawings.

C. Trench excavation, backfill, imported backfill, chlorination, pressure testing and connecting to existing service shall be considered incidental to the water service.

D. Payment for 1-Inch Poly Water Service will be made at the Unit Price named in the Bid Schedule under Pay Item No. 2605.2, payment of which

will constitute full compensation for all WORK described in Section 02605 - Water Services, as shown on the Drawings and as directed by the ENGINEER.

2.22 PIPE INSULATION (Pay Item No. 2607.1) PRICE BASED ON QUANTITY, BOARD

A. Measurement for payment of Pipe Insulation will be the actual number of 2" x 2' x 8' boards installed.

B. Pipe insulation shall only be installed as shown on the Drawings or directed by the ENGINEER. Only those boards of pipe insulation approved by the ENGINEER to be installed will be measured for payment.

C. Payment for Pipe Insulation will be made at the Unit Price named in the Bid Schedule under Pay Item No. 2607.1, payment of which will constitute full compensation for all WORK described in Section 02607 – Pipe Insulation, as shown on the Drawings and as directed by the ENGINEER.

2.23 CONSTRUCTION SURVEYING (Pay Item No. 2702.1) PRICE BASED ON LUMP SUM

A. Measurement for payment of Construction Surveying will be based upon the completion of the entire WORK as a Lump Sum Pay Unit, complete, all in accordance with the requirements of the Contract Documents.

B. The WORK required to remove and reset all survey monuments and other survey markers disturbed by construction activities, whether shown on the Drawings or not, will be considered incidental to the WORK.

C. Payment for Construction Surveying will be made at the Unit Price named in the Bid Schedule under Pay Item No. 2702.1, payment of which will constitute full compensation for all WORK described in Section 02702 - Construction Surveying, as shown on the Drawings and as directed by the ENGINEER.

2.24 TOPSOIL (Pay Item No. 2709.1) PRICE BASED ON QUANTITY, CUBIC YARD

A. Topsoil will be measured for payment by the cubic yard on the basis of truck measure for all WORK performed in the contract under Section 02709 - Topsoil, completed and accepted.

B. Topsoil found to be in excess of 3-inches thick, in place and compacted to final grade, will be deducted from the quantity measured by truck measure based on depths measured at randomly selected locations. Deductions will be computed on the basis of the average end area method.

C. Payment for Topsoil will be made at the Unit Price named in the Bid Schedule under Pay Item No. 2709.1, payment of which will constitute full compensation for all WORK described in Section 02709 - Topsoil, as shown on the Drawings and as directed by the ENGINEER.

2.25 SEEDING, HYDRAULIC METHOD, TYPE III (Pay Item No. 2710.1) PRICE BASED ON QUANTITY, SLURRY UNIT

A. Seeding by the hydraulic method will be measured for payment by the number of slurry units (to the nearest 1/10 unit) of mixture actually applied to the designated area, as directed by the ENGINEER.

B. Payment for Seeding, Hydraulic Method, Type III will be made at the Unit Price named in the Bid Schedule under Pay Item No. 2710.1, payment of which will constitute full compensation for all WORK described in Section 02710 - Seeding, as shown on the Drawings and as directed by the ENGINEER.

2.26 REMOVE AND SALVAGE EXISTING SANITARY SEWER LIFT STATION (Pay Item No. 2716.1) PRICE BASED ON LUMP SUM

A. Measurement for payment of Remove and Salvage Existing Sanitary Sewer Lift Station will be based upon the completion of the entire WORK as a Lump Sum Pay Unit, complete, all in accordance with the requirements of the Contract Documents.

B. WORK under this Pay Items includes salvage and delivery of the existing Misty Lane Lift Station skid, fiberglass enclosure, pumps, piping, valves, motors, control panel, alarms, sensors, meters, hardware, electrical gear and equipment and miscellaneous ancillary items as shown on the Drawings and as directed by the ENGINEER. All salvaged items to be delivered it to the City and Borough of Juneau Wastewater Department at 2009 Radcliffe Road.

C. The removal of other sanitary sewer system pipes and structures located within the right-of-way and project limits as shown on the Drawings and as directed by the ENGINEER will be considered incidental to this Pay Item.

D. Payment for Remove and Salvage Existing Sanitary Sewer Systems will be made at the Unit Price named in the Bid Schedule under Pay Item No. 2716.1, payment of which will constitute full compensation for all WORK described in Section 02716 – Remove and Dispose of Existing Sanitary Sewer and Storm Drainage Systems, as shown on the Drawings and as directed by the ENGINEER.

2.27 REMOVE AND DISPOSE OF EXISTING STORM DRAIN SYSTEM (Pay Item No. 2716.2) PRICE BASED ON LUMP SUM

A. Measurement for payment of Remove and Dispose of Existing Storm Drain System will be based upon the completion of the entire WORK as a Lump Sum Pay Unit, complete, all in accordance with the requirements of the Contract Documents.

B. WORK under this Pay Item shall include removal of existing storm drainage pipes, culverts, underdrains, roof drains, storm drain manholes, catch basins, concrete headwalls, trashracks, area drains, and storm water conveyance structures located within the right-of-way and project limits, unless otherwise indicated on the Drawings or directed by the ENGINEER.

C. Abandonment in place and slurry filling of existing storm drain structures and pipes is not an acceptable alternative to complete removal and disposal. All existing storm drain structures and pipes shall be removed in their entirety and disposed of, as shown in the Drawings and directed by the ENGINEER.

D. Payment for Remove and Dispose of Existing Storm Drain System shall include backfill with suitable material from excavation or imported backfill and compaction to original grade or bottom of roadway subcut and returning disturbed areas to original or better condition.

E. Payment for Remove and Dispose of Existing Storm Drain System will be made at the Unit Price named in the Bid Schedule under Pay Item No. 2716.2, payment of which will constitute full compensation for all WORK described in 02716 – Remove and Dispose of Existing Sanitary Sewer and Storm Drainage Systems, as shown on the Drawings and as directed by the ENGINEER.

2.28 REMOVE AND DISPOSE OF EXISTING WATER PIPE OR FILL WITH SLURRY (Pay Item No. 2717.1) PRICE BASED ON LUMP SUM

A. Measurement for payment for Remove and Dispose of Existing Water Pipe or Fill with Slurry will be based upon the completion of the entire WORK as a Lump Sum Pay Unit, complete, all in accordance with the requirements of the Contract Documents.

B. The WORK under this pay item includes removal of existing water pipe, services, valves, hydrants and other water system structures located within the right-of-way and project limits, unless otherwise indicated on the Drawings or directed by the ENGINEER.

C. WORK under this Pay Item includes filling existing water pipe with cement slurry where shown on the Drawings, as well as removing sections of water

pipe or adding pipe and making pipe connections to allow slurry to be placed to the limits shown.

D. Payment for WORK under this Pay Item shall include backfill with suitable material from excavation or imported backfill and compaction to original grade or bottom of roadway subcut and returning disturbed areas to original or better condition.

E. Payment for Remove and Dispose of Existing Water Pipe or Fill with Slurry will be made at the amount named in the Bid Schedule under Pay Item No. 2717.1, payment of which will constitute full compensation for all WORK described in Section 02717 – Remove and Abandon Existing Water System, as shown on the Drawings and as directed by the ENGINEER.

2.29 RECONSTRUCT MAILBOX (Pay Item No. 2719.1) PRICE BASED ON QUANTITY, EACH

A. Measurement for payment for Reconstruct Mailbox will be the actual number of mailboxes satisfactorily removed, reconstructed and relocated, as shown on the Drawings, CBJ Standard Details 116 and 117, and as directed by the ENGINEER.

B. Mailboxes relocated, but not requiring reconstruction, as determined by the ENGINEER, will not be measured for payment, but will be considered incidental to other WORK under this Section.

C. A gang-type mailbox constructed with two or more receptacles on one post assembly will be measured for payment as one unit. All clustered mailbox receptacles shall be constructed in pairs per CBJ Standard Detail 117, unless shown otherwise on the Drawings.

D. Payment for Reconstruct Mailbox will be made at the Unit Price named in the Bid Schedule under Pay Item No. 2719.1, payment of which will constitute full compensation for all WORK described in Section 02719 – Mailboxes, as shown on the Drawings, CBJ Standard Details 116 and 117, and as directed by the ENGINEER.

2.30 RELOCATE ELECTRICAL CONDUCTOR (Pay Item No. 2722.1) PRICE BASED ON QUANTITY, LINEAR FOOT

A. Measurement for payment for Relocate Electrical Conductor will be the actual linear feet of power, telephone or cable television conductors or conduits actually relocated and functional, as described in Section 02722 – Utility Conduit Relocation, and as directed by the ENGINEER.

B. Only those power, telephone or cable television conductors or conduits actually found to be in direct conflict with storm drain pipe or other graded

pipe, ditches or structures, and approved by the ENGINEER for relocation, will be measured for payment.

C. WORK under this Pay Item will include all power, telephone, or cable television conductors or conduits three (3) inches or less in diameter.

D. WORK under this Pay Item will include electrical conductors that run along or cross new drainage ditches that must be relocated to maintain burial requirements.

E. WORK under this Section includes subcontracting or otherwise arranging with AEL&P, ACS Telephone, or GCI Cable Network for any work with the power, telephone and television services.

F. Electrical conductors that run along the pipe trench, and are not in direct conflict with the new pipe being installed, but require that they must be pulled aside to clear the trenching and pipe installation operations will be considered incidental to other WORK under the Contract.

G. All WORK necessary to install new storm drain pipe or other new utility pipe beneath an existing utility conduit or conductor, including those that are encased in concrete, which does not intersect the new pipe, will be considered incidental to other WORK under the Contract.

H. Payment for Relocate Electrical Conductor will be made at the amount shown in the Bid Schedule under Pay Item No. 2722.1, which payment will constitute full compensation for all WORK described in Section 02722 – Utility Conduit Relocation, as shown on the Drawings and as directed by the ENGINEER.

2.31 A.C. PAVEMENT, TYPE II-A, CLASS B (Pay Item No. 2801.1) PRICE BASED ON QUANTITY, TON

A. A.C. Pavement, Type II-A, Class B will be measured for payment by the ton.

B. No measurement will be made for asphalt concrete pavement that exceeds 12% more than the neat line quantity, as determined by the nominal design thickness multiplied by the area shown on the Drawings and/or as directed by the ENGINEER, with a conversion factor equal to 94% of the approved mix design maximum specific gravity.

C. All resealing of joints with existing pavement, including those resealed after the pavement has cooled to ambient temperatures, will not be measured for payment, but will be considered incidental to other WORK under the contract.

D. The WORK under this Pay Item includes all mainline roadway paving, intersection tie-ins, driveway wing-outs, hydrant pads and lift station pad to the limits shown on the plans.

E. Tack Coat applied to existing joint surfaces and along edge of gutters prior to placement of asphalt concrete pavement, will be considered incidental to other WORK under this Section.

F. Asphalt Pavement required for reconstructed collars around manholes and water valves, if any, will be considered incidental to other WORK under this Section.

G. Payment under Pay Item No. 2801.1 may include deductions in the final price if, after asphalt laboratory testing, the asphalt pavement does not meet the required specification. Deductions are further described in Section 02801 – Asphalt Concrete Pavement, Part 3 – Execution, Article 3.13 Acceptance Sampling and Testing, Paragraph K.

H. Payment for A.C. Pavement, Type II-A, Class B, will be made at the Unit Price named in the Bid Schedule under Pay Item No. 2801.1, payment of which will constitute full compensation for all WORK described in Section 02801 - Asphalt Concrete Pavement, as shown on the Drawings and as directed by the ENGINEER.

2.32 REMOVE EXISTING ASPHALT SURFACING (Pay Item No. 2806.1) PRICE BASED ON QUANTITY, SQUARE YARD

A. Removing existing asphalt surfacing, including leveling courses and overlays, will be measured for payment per square yard, complete, except that no measurement will be made for removing asphaltic surfacing less than one-inch-thick. Asphalt thickness is estimated to be 2-3 inches thick.

B. Removal of existing asphalt surfacing will be measured per top surface square yard, which will include the full thickness of all layers of existing asphalt, including overlays and underlying pavement. Removal of existing reinforced concrete slab identified within the roadway will be paid at the Unit Price named in the Bid Schedule under Pay Item No. 3304.3.

C. Payment for Remove Existing Asphalt Surfacing will be made at the Unit Price named in the Bid Schedule under Pay Item No. 2806.1, payment of which will constitute full compensation for all WORK described in Section 02806 - Remove Existing Asphalt Surfacing, as shown on the Drawings and as directed by the ENGINEER.

3.1 CONCRETE HEADWALL (Pay Item No. 3302.1) PRICE BASED ON QUANTITY, EACH

A. Concrete Headwall will be measured for payment per each, including all earth work, complete in place.

B. The WORK under this Pay Item includes providing and installing a hinged trash rack per CBJ Standard Detail 104A on the inlet of pipe P-4.

C. Payment for Concrete Headwall will be made at the Unit Price named in the Bid Schedule under Pay Item No. 3302.1, payment of which will constitute full compensation for all WORK described in section 03302 – Concrete Structures, as shown on the Drawings and as directed by the ENGINEER.

3.2 CONCRETE DRIVEWAY, 6-INCHES THICK (Pay Item No. 3303.1) PRICE BASED ON QUANTITY, SQUARE YARD

A. Measurement of Concrete Driveway, 6-Inches Thick will be based on the actual square yards complete in place and accepted.

B. Payment for Concrete Driveway, 6-Inches Thick, will be made at the amount named in the Bid Schedule under Pay Item No. 3303.1, payment of which will constitute full compensation for all WORK described in Section 03303 – Sidewalk, Curb and Gutter, as shown on the Drawings and as directed by the ENGINEER.

3.3 VALLEY GUTTER, TYPE III (Pay Item No. 3303.2) PRICE BASED ON QUANTITY, LINEAR FOOT

A. Valley Gutter, Type III, will be measured for payment per linear foot actually installed, complete in place as shown on the Contract Documents. Measurements will be made along the flowline of the gutter pan and will be continuous across catch basins.

B. Valley Gutter, Type III, will be made at the Unit Price named in the Bid Schedule under Pay Item No. 3303.2, payment of which will constitute full compensation for all work described in Section 03303 - Sidewalk, Curb and Gutter, as shown on the Drawings, and as directed by the ENGINEER.

3.4 REMOVAL OF CONCRETE DRIVEWAY SLAB (Pay Item No. 3304.1) PRICE BASE ON QUANTITY, SQUARE YARD

A. Removal of Concrete Driveway Slab will be measured by the actual square yards of concrete sidewalk or driveway originally in place, removed and disposed of in accordance with the Contract Documents.

B. Payment for Removal of Concrete Driveway Slab will be made at the Unit Price named in the Bid Schedule under Pay Item No. 3304.1, payment of which will constitute full compensation for all WORK described in Section 03304 – Remove Existing Sidewalk, Concrete Slab or Curb and Gutter, as shown on the Drawings and as directed by the ENGINEER.

16.1 SANITARY SEWER LIFT STATION ELECTRICAL (Pay Item No. 16000.1) PRICE BASED ON LUMP SUM

A. Measurement for payment of Sanitary Sewer Lift Station Electrical will be based upon the completion of the entire WORK as a Lump Sum Pay Unit, complete, all in accordance with the requirements of the Contract Documents.

B. Sanitary Sewer Lift Station Electrical shall include, but not be limited to all electrical work, permitting, coordination with AEL&P, earthwork, concrete, metal fabrication, conduit and wiring, electrical controls, switches, power connections, pull boxes, panel boards, testing, warranties, operations and technical data as required, and any other material and WORK necessary for a complete, working, and acceptable installation for the Sanitary Sewer Lift Station as shown on the electrical Drawings and included in Division 16. The installation of the equipment stand, meter and communication panel and ancillary items level sensor and float installation and wiring and pump wiring as required is included in this Specification Section.

C. Payment for the Sanitary Sewer Lift Station Electrical will be made at the Unit Price named in the Bid Schedule under Pay Item No. 16000.1, payment of which will constitute full compensation for all WORK described in Division 16, as shown on the Drawings and as directed by the ENGINEER.

16.2 STREET LIGHTING (Pay Item No. 16000.2) PRICE BASED ON LUMP SUM

A. Measurement for payment of Street Lighting will be based upon the completion of the entire WORK as a Lump Sum Pay Unit, complete, all in accordance with the requirements of the Contract Documents.

B. Payment for Street Lighting will be made at the Unit Price named in the Bid Schedule under Pay Item No. 16000.2, payment of which will constitute full compensation for all WORK described in 16521 – Exterior Lighting, as shown on the Drawings and as directed by the ENGINEER.

16.3 ELECTRICAL DEMOLITION (Pay Item Nos. 16000.3) PRICE BASED ON LUMP SUM

A. Measurement for payment for Electrical Demolition will be based upon the completion of the entire WORK as a Lump Sum Pay Unit, complete, all in accordance with the requirements of the Contract Documents.

B. Electrical Demolition includes, but is not limited to, removal of the existing Misty Lane Lift Station electrical power meter, street light, conduit and cables and miscellaneous ancillary items as indicated in the Drawings.

C. Payment for Electrical Demolition will be made at the amount shown on the Bid Schedule under Item 16000.3, which payment will constitute full compensation for all WORK described in Division 16, as shown on the Drawings, and as directed by the ENGINEER.

PART 2 - PRODUCTS (Not Used)

PART 3 - EXECUTION (Not Used)

END OF SECTION

SECTION 1300 – CONTRACTOR SUBMITTALS, ***delete*** *in its entirety and* ***replace*** *with the following:*

SECTION 01300 – CONTRACTOR SUBMITTALS

PART 1 – GENERAL

1.1 GENERAL

A. Wherever submittals are required hereunder, all such submittals shall be submitted to the ENGINEER by the CONTRACTOR.

B. Within 14 Days after the date of commencement as stated in the Notice To Proceed, the CONTRACTOR shall submit the following items to the ENGINEER for review:

1. A preliminary schedule of Shop Drawings, sample, and proposed substitutes or "or-equal" submittals.
2. A list of all permits and licenses the CONTRACTOR shall obtain indicating the agency required to grant the permit and the expected date of submittal for the permit and required date for receipt of the permit.
3. A complete progress schedule for all phases of the Project.
4. Material Safety Data Sheets on products used on the Project.
5. Traffic Control Plan(s) and Traffic Control Personnel certifications.
6. A plan for temporary erosion control and pollution control, as required.
7. A letter designating the CONTRACTOR's Superintendent, defining that person's responsibility and authority.
8. A letter designating the CONTRACTOR's safety representative and the Equal Employment Opportunity (EEO) Officer and that person's responsibility and authority.

C. No payments shall be made to the CONTRACTOR until all of these items are submitted in their entirety, as determined by the ENGINEER.

1.2 SHOP DRAWING SUBMITTAL

A. Wherever called for in the Contract Documents, or where required by the ENGINEER, the CONTRACTOR shall furnish to the ENGINEER, for review, eight (8) copies of each Shop Drawing submittal. The term "Shop

Drawings" as used herein shall be understood to include detail design calculations, Shop Drawings, fabrication drawings, installation drawings, erection drawings, lists, graphs, operating instructions, catalog sheets, data sheets, and similar items.

B. All Shop Drawing submittals shall be accompanied by the CONTRACTOR's standard submittal transmittal form. Any submittal not accompanied by such a form, or where all applicable items on the form are not completed, will be returned for re-submittal.

C. Normally, a separate transmittal form shall be used for each specific item or class of material or equipment for which a submittal is required. Transmittal of a submittal of various items using a single transmittal form will be permitted only when the items taken together constitute a manufacturer's "package" or are so functionally related that expediency indicates review of the group or package as a whole. A multiple-page submittal shall be collated into sets, and each set shall be stapled or bound, as appropriate, prior to transmittal to the ENGINEER.

D. Except as may otherwise be provided herein, the ENGINEER will return prints of each submittal to the CONTRACTOR with its comments noted thereon, within 30 calendar days following receipt of them by the ENGINEER. It is considered reasonable that the CONTRACTOR shall make a complete and acceptable submittal to the ENGINEER by the second submission of a submittal item. The OWNER reserves the right to withhold monies due to the CONTRACTOR to cover additional costs of the ENGINEER's review beyond the second submittal. The ENGINEER's maximum review period for each submittal including all re-submittals will be 30 days per submission. In other works, for a submittal that requires two re-submittals before it is complete, the maximum review period for that submittal could be 90 days.

E. If three (3) copies of a submittal are returned to the CONTRACTOR marked "NO EXCEPTIONS TAKEN," formal revision and resubmission of said submittal will not be required.

F. If three (3) copies of a submittal are returned to the CONTRACTOR marked "MAKE CORRECTIONS NOTED," formal revision and resubmission of said submittal is not required.

G. If one (1) copy of the submittal is returned to the CONTRACTOR marked "AMENDRESUBMIT," the CONTRACTOR shall revise said submittal and shall resubmit the required number of copies of said revised submittal to the ENGINEER.

H. If one (1) copy of the submittal is returned to the CONTRACTOR marked "REJECTEDRESUBMIT," the CONTRACTOR shall revise said submittal

and shall resubmit the required number of copies of said revised submittal to the ENGINEER.

I. Fabrication of an item may be commenced only after the ENGINEER has reviewed the pertinent submittal and returned copies to the CONTRACTOR marked either "NO EXCEPTIONS TAKEN" or "MAKE CORRECTIONS NOTED." Corrections indicated on submittals shall be considered as changes necessary to meet the requirements of the Contract Documents and shall not be taken as the basis for changes to the Contract requirements only a Change Order can alter the Contract Price, Contract Time, or Specifications.

J. All CONTRACTOR Shop Drawing submittals shall be carefully reviewed by an authorized representative of the CONTRACTOR, prior to submission to the ENGINEER. Each submittal shall be dated, signed, and certified by the CONTRACTOR, as being correct and in strict conformance with the Contract Documents. In the case of Shop Drawings, each sheet shall be dated, signed, and certified. No consideration for review by the ENGINEER of any CONTRACTOR submittal will be made for any items which have not been so certified by the CONTRACTOR. All non-certified submittals will be returned to the CONTRACTOR without action taken by the ENGINEER, and any delays caused by thereby shall be the total responsibility of the CONTRACTOR.

K. The ENGINEER's review of CONTRACTOR Shop Drawing submittals shall not relieve the CONTRACTOR of the entire responsibility for the correctness of details and dimensions. The CONTRACTOR shall assume all responsibility and risk for any misfits due to any errors in CONTRACTOR submittals. The CONTRACTOR shall be responsible for the dimensions and the design of adequate connections and details.

1.3 SAMPLES SUBMITTAL

A. Whenever in the Specifications samples are required, the CONTRACTOR shall submit not less than three (3) samples of each item or material to the ENGINEER for acceptance at not additional cost to the OWNER.

B. Samples, as required herein, shall be submitted for acceptance a minimum of 21 days prior to ordering such material for delivery to the job site, and shall be submitted in an orderly sequence so that dependent materials or equipment can be assembled and reviewed without causing delays in the WORK.

C. All samples shall be individually and indelibly labeled or tagged indicating thereon all specified physical characteristics and supplier's names for identification and submitted to the ENGINEER for acceptance. Upon receiving acceptance of the ENGINEER, one (1) set of the samples will be

stamped and dated by the ENGINEER and returned to the CONTRACTOR, and one (1) set of samples will be retained by the ENGINEER, and one (1) set of samples shall remain at the job site until completion of the WORK.

D. Unless clearly stated otherwise, it is assumed that all colors and textures of specified items presented in sample submittal are from the manufacturer's standard colors and standard materials, products, or equipment lines. If the samples represent non-standard colors, materials, products or equipment lines, and their selection will require an increase in Contract Time or Contract Price, the CONTRACTOR will clearly indicate this on the transmittal page of the submittal.

1.4 OPERATIONS AND MAINTENANCE MANUAL SUBMITTAL

A. The CONTRACTOR shall include in the Operations and Maintenance Manuals for each item of mechanical, electrical, and instrumentation equipment, the following:

1. Complete operating instructions, including location of controls, special tools or other equipment required, related instrumentation, and other equipment needed for operation.
2. Lubrication schedules, including the lubricant SAE grade and type, temperature range of lubricants, and including frequency of required lubrication.
3. Preventive maintenance procedures and schedules.
4. Parts lists, by generic title and identification number, complete, with exploded views of each assembly.
5. Disassembly and reassembly instructions.
6. Name and location of nearest supplier and spare parts warehouse.
7. Recommended troubleshooting and startup procedures.
8. Reproducible prints of the record Drawings, including diagrams and schematics, as required under the electrical and instrumentation portions of these Specifications.
9. Tabulation of proper settings for all pressure relief valves, (low/high) pressure switches and other related equipment protection devices.
10. Detailed test procedures to determine performance efficiency of equipment.
11. List of all electrical relay settings including alarm and contract settings.

B. The CONTRACTOR shall furnish to the ENGINEER five identical sets of technical manuals. Each set shall consist of one or more volumes, each of which shall be bound in a standard size, 3-ring, loose-leaf vinyl plastic hard cover binder suitable for bookshelf storage. Binder ring size shall not exceed 2.5 inches. A table of contents shall be provided which indicates all equipment in the technical manuals.

C. All technical manuals shall be submitted complete and in final form to the ENGINEER prior to the requests for final payment.

D. Incomplete or unacceptable Operations and Maintenance Manuals shall constitute sufficient justification to withhold payment for WORK completed.

1.5 SPARE PARTS LIST SUBMITTAL

A. The CONTRACTOR shall furnish to the ENGINEER five (5) identical sets of spare parts information for all mechanical, electrical, and instrumentation equipment. The spare parts list shall include the current list price of each spare part. The spare parts list shall be limited to those spare parts which each manufacturer recommends be maintained by the OWNER in the inventory at the plant site. Each manufacturer or supplier shall indicate the name, address, and telephone number of its nearest outlet of spare parts to facilitate the OWNER in ordering. The CONTRACTOR shall cross-reference all spare parts lists to the equipment numbers designated in the Contract Documents. The spare parts lists shall be bound in standard size, 3-ring, loose leaf, vinyl plastic hard cover binders suitable for bookshelf storage. Binder ring size shall not exceed 2.5 inches.

1.6 RECORD DRAWINGS SUBMITTALS

A. The CONTRACTOR shall keep and maintain, at the job site, one record set of Drawings. On these, it shall mark all project conditions, locations, configurations, and any other changes or deviations which may vary from the details represented on the original Contract Drawings, including buried or concealed construction and utility features which are revealed during the course of construction. Special attention shall be given to recording the horizontal and vertical location of all buried utilities that differ from the locations indicated, or which were not indicated on the Contract Drawings. Said record drawings shall be supplemented by any detailed sketches as necessary or directed to indicate, fully, the WORK as actually constructed. These master record Drawings, of the CONTRACTOR's representation of as-built conditions, including all revisions made necessary by Addenda, Change Orders, and the like shall be maintained up-to-date during the progress of the WORK.

B. In the case of those Drawings which depict the detail requirement for equipment to be assembled and wired in the factory, such as motor control centers and the like, the record drawings shall be updated by indicating those portions which are superseded by Change Order Drawings or final Shop Drawings, and by including appropriate reference information describing the Change Orders by number and the Shop Drawings by manufacturer, Drawing, and revision numbers.

C. Record drawings shall be accessible to the ENGINEER at all times during the construction period and shall be delivered to the ENGINEER on the 20th working day of every third month after the month in which the Notice to Proceed is given as well as upon completion of the WORK.

D. Final payment will not be acted upon until the CONTRACTOR-prepared Record Drawings have been delivered to the ENGINEER.

1.7 PROGRESS SCHEDULES

A. The progress schedule shall be in Bar Chart or Critical Path Method (CPM) form as required by the ENGINEER.

B. The progress schedule shall show the order in which the CONTRACTOR proposes to carry out the WORK and the contemplated date on which the CONTRACTOR and their Subcontractors will start and finish each of the salient features of the WORK, including any scheduled periods of shutdown. The schedule shall also indicate any anticipated periods of multiple-shift WORK.

C. Upon substantial changes to the CONTRACTOR's progress schedule of work or upon request of the ENGINEER, the CONTRACT shall submit a revised progress schedule(s) in the form required. Such revised schedule(s) shall conform with the contract time and take into account delays which may have been encountered in the performance of the WORK. In submitting a revised schedule, the CONTRACTOR shall state specifically the reason for the revision and the adjustments made in his schedule or methods of operation to ensure the completion of all the WORK within the contract time.

1.8 PROPOSED SUBSTITUTES OR "OR-EQUAL" ITEM SUBMITTAL

A. Whenever materials or equipment are specified or described in the Contract Documents by using the name of a proprietary item or the name of a particular supplier, the naming of the item is intended to establish the type, function, and equality required. If the name is followed by the words "or-equal" indicating that a substitution is permitted, materials or equipment of other suppliers may be accepted by the ENGINEER if sufficient information is submitted by the CONTRACTOR to allow the ENGINEER to determine that the material or equipment proposed is equivalent or equal to that named, subject to the following requirements:

1. The burden of proof as to the type, function, and quality of any such substitute material or equipment shall be upon the CONTRACTOR.

2. The ENGINEER will be the sole judge as to the type, function, and quality of any such substitute material or equipment and the ENGINEER's decision shall be final.
3. The ENGINEER may require the CONTRACTOR, to furnish at the CONTRACTOR's expense, additional data about the proposed substitute.
4. The OWNER may require the CONTRACTOR to furnish at the CONTRACTOR's expense a special performance guarantee or other surety with respect to any substitute.
5. Acceptance by the ENGINEER of a substitute item proposed by the CONTRACTOR shall not relieve the CONTRACTOR of the responsibility for full compliance with the Contract Documents and for adequacy of the substitute item.
6. The CONTRACTOR shall be responsible for resultant changes and all additional costs which the accepted substitution requires in the CONTRACTOR's WORK, the WORK of its Subcontractors and of other contractors, and shall effect such changes without cost to the OWNER. This shall include the cost for redesign and claims of other Contractor affected by the resulting change.

B. The procedure for review by the ENGINEER will include the following:

1. If the CONTRACTOR proposes to furnish or use a substitute item of material or equipment, the CONTRACTOR shall make written application to the ENGINEER on the "Substitution Request Form" for acceptance thereof.
2. Unless otherwise provided by law or authorized in writing by the ENGINEER, the "Substitution Request Form(s)" shall be submitted within the 21-day period after Notice To Proceed.
3. Wherever a proposed substitute material or equipment has not been submitted within said 21-day period, or wherever the submission of a proposed substitute material or equipment has been judged to be unacceptable by the ENGINEER, the CONTRACTOR shall provide material or equipment named in the Contract Documents.
4. The CONTRACTOR shall certify that the proposed substitute will perform adequately the functions and achieve the results called for by the general design, be similar and of equal substance to that specified, and be suited to the same use as that specified.
5. The ENGINEER will be allowed a reasonable time within which to evaluate each proposed substitute. In no case will this reasonable time period be less than 30 days.
6. As applicable, no Shop Drawing submittals will be made for a substitute item nor will any substitute item be ordered, installed, or utilized without the ENGINEER's prior written acceptance of the CONTRACTOR's "Substitution Request Form" which will be evidenced by a Change Order.

7. The ENGINEER will record the time required by the ENGINEER in evaluating substitutions proposed by the CONTRACTOR and in making changes in the Contract Documents occasioned thereby. Whether or not the ENGINEER accepts a proposed substitute, the CONTRACTOR shall reimburse the OWNER for the charges of the ENGINEER for evaluating each proposed substitute.

C. The CONTRACTOR's application using the "Substitution Request Form" shall contain the following statements and/or information which shall be considered by the ENGINEER in evaluating the proposed substitution:

1. The evaluation and acceptance of the proposed substitute will not prejudice the CONTRACTOR's achievement of Substantial Completion on time.
2. Whether or not acceptance of the substitute for use in the WORK will require a change in any of the Contract Documents to adopt the design to the proposed substitute.
3. Whether or not incorporation or use of the substitute in connection with the WORK is subject to payment of any license fee or royalty.
4. All variations of the proposed substitute for that specified will be identified.
5. Available maintenance, repair, and replacement service and its estimated cost will be indicated.
6. Itemized estimate of all costs that will result directly or indirectly from acceptance of such substitute, including cost of redesign and claims of other contractors affected by the resulting change.

1.9 MATERIAL CERTIFICATION SUBMITTAL

A. The ENGINEER may permit the use, prior to sampling, inspection and testing, of certain materials or assemblies when accompanied by manufacturer's material certifications stating that such materials or assemblies fully comply with the requirements of the Contract. The certification shall be signed by the manufacturer, and will specifically reference the material's compliance with the AASHTO, ASTM and/or CBJ Standards specified in the applicable Contract Documents.

B. Material certifications shall be submitted to the ENGINEER prior to incorporating the item into the WORK.

C. Materials or assemblies used on the basis of material certifications may be sampled, inspected and/or tested at any time, and if found not in conformity with these specifications, will be subject to rejection whether in place or not.

PART 2 - PRODUCTS (Not Used)

PART 3 - EXECUTION (Not Used)

(SUBSTITUTION REQUEST FORM - next page)

CBJ Engineering Department
SUBSTITUTION REQUEST FORM

TO: _____ Project: _____
Contract No.: _____
OWNER: _____
SPECIFIED ITEM:

_____	_____	_____	_____
Section	Page	Paragraph	Description

The undersigned requests consideration of the following:

PROPOSED SUBSTITUTION: _____
Attached data includes product description, specifications, drawings, photographs, performance and test data adequate for evaluation of the request. Applicable portions of the data are clearly identified.

The undersigned states that the following paragraphs, unless modified on attachments are correct:

1. The proposed substitution does not affect dimensions shown on Drawings and will not require a change in any of the Contract Documents.

2. The undersigned will pay for changes to the design, including engineering design, detailing, and construction costs caused by the requested substitution which is estimated to be $_____.

3. The proposed substitution will have no adverse affect on other contractors, the construction schedule (specifically the date of substantial completion), or specified warranty requirements.

4. Maintenance and service parts will be locally available for the proposed substitution.

5. The incorporation or use of the substitute in connection with the WORK is not subject to payment of any license fee or royalty.

The undersigned further states that the function, appearance, and quality of the Proposed Substitution are equivalent or superior to the Specified item.

Submitted by CONTRACTOR: _____ Reviewed by ENGINEER _____
Signature _____ ☐ Accepted ☐ Accepted as Noted
Firm: _____ ☐ Not Accepted ☐ Received Too Late
By: _____ Date: _____
Title: _____ Telephone: _____
Date: _____
Attachments: _____

END OF SECTION

SECTION 01550 – SITE ACCESS AND STORAGE

SECTION 01550 – SITE ACCESS AND STORAGE, PART 1 – GENERAL, Article 1.3, MAINTENANCE OF TRAFFIC, ***revise*** *paragraph* M. *to read:*

M. Provide pedestrian detours as necessary in areas adjacent to or thru new construction following demolition of existing surfacing and other structures. The CONTRACTOR shall provide smooth, graded pathways free of mud, muck, and other materials that could prevent the easy movement of disabled individuals or those requiring special assistance. The pathways shall be a minimum of 48-inches-wide, meet ADA regulations, and be clearly marked with temporary fencing, barrier devices, or other methods to guide pedestrians through active construction areas to existing pathways, sidewalks, curb ramps, businesses, residences, docks, or other facilities.

END OF SECTION

SECTION 01570 – EROSION AND SEDIMENT CONTROL

SECTION 01570 – EROSION AND SEDIMENT CONTROL, PART 1 – GENERAL, Article 1.1, THE REQUIREMENT, ***add*** *the following paragraphs:*

D. The area of disturbance for this project is approximately 0.6 acres.

E. ADEC has identified contaminated sites within 1,500 feet of the Project Limits that are currently in “Institutional Control” cleanup status. It is the responsibility of the CONTRACTOR to consult ADEC and obtain all necessary permits for performing excavation dewatering.

END OF SECTION

Add *the following Section*:

SECTION 01600 – MATERIALS AND EQUIPMENT

PART 1 - GENERAL

1.1 GENERAL

A. The word "Products," as used herein, is defined to include purchased items for incorporation into the WORK, regardless of whether specifically purchased for project or taken from CONTRACTOR's stock of previously purchased products.

B. The word "Materials," is defined as products which must be substantially cut, shaped, worked, mixed, finished, refined, or otherwise fabricated, processed, installed, or applied to form units of work.

C. The word "Equipment" is defined as products with operational parts, regardless of whether motorized or manually operated, and particularly including products with service connections (wiring, piping, and other like items).

D. Definitions in this paragraph are not intended to negate the meaning of other terms used in Contract Documents, including "specialties," "systems," "structure," "finishes," "accessories," "furnishings," special construction," and similar terms, which are self-explanatory and have recognized meanings in the construction industry.

E. Neither "Products" nor "Materials" nor "Equipment" includes machinery and equipment used for preparation, fabrication, conveying and erection of the WORK.

1.2 QUALITY ASSURANCE

A. Source Limitations. To the greatest extent possible for each unit of work, the CONTRACTOR shall provide products, materials, or equipment of a singular generic kind from a single source.

B. Compatibility of Options. Where more than one choice is available as options for CONTRACTOR's selection of a product, material, or equipment, the CONTRACTOR shall select an option which is compatible with other products, materials, or equipment already selected. Compatibility is a basic general requirement of product/material selections.

1.3 PRODUCT DELIVERY/STORAGE/HANDLING

A. The CONTRACTOR shall deliver, handle, and store products in accordance with manufacturer's written recommendations and by methods and means which will prevent damage, deterioration, and loss including theft. Delivery schedules shall be controlled to minimize long-term storage of products at site and overcrowding of construction spaces. In particular, the CONTRACTOR shall ensure minimum holding or storage times for products recognized to be flammable, hazardous, easily damaged, or sensitive to deterioration, theft, and other sources of loss.

1.4 TRANSPORTATION AND HANDLING

A. Products shall be transported by methods to avoid product damage and shall be delivered in undamaged condition in manufacturer's unopened containers or packaging.

B. The CONTRACTOR shall provide equipment and personnel to handle products, materials, and equipment by methods to prevent soiling and damage.

C. The CONTRACTOR shall provide additional protection during handling to prevent marring and otherwise damaging products, packaging, and surrounding surfaces.

1.5 STORAGE AND PROTECTION

A. Products shall be stored in accordance with manufacturer's written instructions, with seals and labels intact and legible. Sensitive products shall be stored in weather-tight climate controlled enclosures and temperature and humidity ranges shall be maintained within tolerances required by manufacturer's written instructions.

B. For exterior storage of fabricated products, they shall be placed on sloped supports above ground. Products subject to deterioration shall be covered with impervious sheet covering; ventilation shall be provided to avoid condensation.

C. Loose granular materials shall be stored on solid surfaces in a well-drained area and shall be prevented from mixing with foreign matter.

D. Storage shall be arranged in a manner to provide access for maintenance and inspection. The CONTRACTOR shall periodically inspect to assure products are undamaged and are maintained under required conditions.

1.6 MAINTENANCE OF STORAGE

A. Stored products shall be periodically inspected on a scheduled basis. The CONTRACTOR shall maintain a log of inspections and shall make said log available to the ENGINEER on request.

B. The CONTRACTOR shall verify that storage facilities comply with manufacturer's product storage requirements.

C. The CONTRACTOR shall verify that manufacturer-required environmental conditions are maintained continually.

D. The CONTRACTOR shall verify that surfaces of products exposed to the elements are not adversely affected and that any weathering of finishes does not occur.

E. For mechanical and electrical equipment, the CONTRACTOR shall provide a copy of the manufacturer's service instructions with each item and the exterior of the package shall contain notice that instructions are included.

F. Products shall be serviced on a regularly scheduled basis, and a log of services shall be maintained and submitted as a record document prior to acceptance by the OWNER in accordance with the Contract Documents.

PART 2 – PRODUCTS (Not Used)

PART 3 - EXECUTION (Not Used)

END OF SECTION

SECTION 01700 – PROJECT CLOSE-OUT

SECTION 01700 – PROJECT CLOSE-OUT, PART 1 – GENERAL, Article 1.3, FINAL SUBMITTALS, Paragraph A. ***Delete*** items 6, 7 and 8 and ***replace with*** *the following subparagraph:*

6. Compliance Certificate and release, signed by the CONTRACTOR, shall be submitted to the Engineering Contract Administrator.

SECTION 01700 – PROJECT CLOSE-OUT, PART 1 – GENERAL, Article 1.3, FINAL SUBMITTALS, ***Add*** *the following paragraph:*

C. Before final payment, the CONTRACTOR shall provide the OWNER with clearance from the Alaska Department of Labor and Workforce Development for the CONTRACTOR and all Subcontractors that have worked on the Project. This clearance shall indicate that all Employment Security Taxes have been paid. A sample form for this propose is at the end of Section 00800 – supplementary General Conditions.

SECTION 01700 – PROJECT CLOSE-OUT, PART 1 – GENERAL, *Replace the* COMPLIANCE CERTIFICATE AND RELEASE FORM *with the following forms:*

COMPLIANCE CERTIFICATE AND RELEASE FORM

PROJECT: Misty Lane Reconstruction
CONTRACT NO: BE22-217

The **CONTRACTOR** must complete and submit this form to the Contract Administrator with respect to the entire contract and submit completed Subcontractor Compliance forms for each Subcontractor used on the Contract and listed on the Subcontractor report.

Completed forms shall be submitted upon completion of the Project. All requirements and submittals must be met before final payment will be made to the CONTRACTOR.

I certify that the following and any referenced attachments are true:

- All WORK has been performed, materials supplied, and requirements met in accordance with the applicable Drawings, Specifications, and Contract Documents.

- All payments to Subcontractors and Suppliers have been made in accordance with Alaska Statute 36.90.210. If not, please provide written explanation, for each case, why and the specific mutual payment agreement reached with the Supplier or Subcontractor.

- CHECK ONE:

  ☐ All Suppliers and Subcontractors have been paid in full with no claims for labor, materials or other services outstanding.

  ☐ The following Suppliers and Subcontractors are due final payment which will be made upon the release of the final payment by the CBJ. List the Suppliers and Subcontractors and the amount they are due below (attach separate sheet if necessary):

	Supplier or Subcontractor	Amount Owed
1.		$
2.		$
3.		$
4.		$
5.		$
6.		$
7.		$

- All employees have been paid not less than the current prevailing wage rates set by the State of Alaska (or U.S. Department of Labor, as applicable).

- All equal employment opportunity, certified payroll and other reports have been filed in accordance with the prime contract.

- The attached list of Subcontractors is complete (required from CONTRACTOR). The City Engineer was advised and approved of all Subcontractors before WORK was performed and has approved any substitutions of Subcontractors.

- All DBE firms listed as a precondition of the prime contract award must have performed a commercially useful function in order for the WORK to count to a DBE goal. All DBE firms performed the WORK stated and have received at least the amount claimed for credit in the Contract Documents.

- All DBE Subcontractors must attach a signed statement of the payment amount received, the nature of WORK performed, whether any balance is outstanding, and indicate that no rebates are involved.

- If the amount paid is less than the amount originally claimed for DBE credit, the CONTRACTOR has attached approval from the City Engineer for underutilization.

I understand it is unlawful to misrepresent information in order to receive a payment which would otherwise be withheld if these conditions were not met. I am an authorized agent of this firm and sign this freely and voluntarily. The foregoing statements are true and apply to the following project contractor.

_____ Capacity: CONTRACTOR
Firm Name

_____ _____ _____
Signature Printed Name and Title Date

Return completed form to: Engineering Contracts Division, City and Borough of Juneau, 155 South Seward Street, Juneau, AK 99801 or by email to: contracts@juneau.org

Call (907) 586-0800 if we can be of further assistance or if you have any questions.

SUBCONTRACTOR COMPLIANCE CERTIFICATE AND RELEASE FORM

PROJECT: Misty Lane Reconstruction
CONTRACT NO: BE22-217

Each **SUBCONTRACTOR** must complete and submit this form to the Contract Administrator, through the General Contractor, with respect to the entire contract.

Completed forms shall be submitted upon completion of the Project. All requirements and submittals must be met before final payment will be made to the CONTRACTOR.

I certify that the following and any referenced attachments are true:

- All WORK has been performed, materials supplied, and requirements met in accordance with the applicable Drawings, Specifications, and Contract Documents.

- _____(name of firm) has been paid by the Contractor in accordance with Alaska Statute 36.90.210. (If not, please provide written explanation on an attached sheet, for each case. Provide specific details why payment was not made and the specific mutual payment agreement reached with the Contractor if it is still unresolved.)

- CHECK ONE:
  - ☐ I / WE have been paid in full by the Contractor, with no claims for labor, materials or other services outstanding.

  - ☐ I / WE are due the following amount from the Contractor which is included in the Contractors Request for Final Payment. WE are due a total of $_____ for the following individual items that have yet to be paid (attach separate sheet if necessary):

	Outstanding Payment Item	Outstanding Amount Owed
1.		$
2.		$
3.		$
4.		$
5.		$
6.		$
7.		$

- All employees have been paid not less than the current prevailing wage rates set by the State of Alaska (or U.S. Department of Labor, as applicable).

- All equal employment opportunity, certified payroll and other reports have been filed in accordance with the prime contract.

I understand it is unlawful to misrepresent information in order to receive a payment which would

otherwise be withheld if these conditions were not met. I am an authorized agent of this firm and sign this freely and voluntarily. The foregoing statements are true and apply to the following project contractor.

_____ Capacity: SUBCONTRACTOR
Firm Name

_____ _____ _____
Signature Printed Name and Title Date

Prime Contractor shall return completed form to: Engineering Contracts Division, City and Borough of Juneau, 155 South Seward Street, Juneau, AK 99801 or email: contracts@juneau.org

Call (907) 586-0800 if we can be of further assistance or if you have any questions.

END OF SECTION

SECTION 02202 – EXCAVATION AND EMBANKMENT

SECTION 02202 – EXCAVATION AND EMBANKMENT, PART 2 – PRODUCTS, *add the following Article:*

2.9 USABLE MATERIAL FROM EXCAVATION

A. Usable material from excavation shall meet the requirements for Embankment. The CONTRACTOR is responsible for stockpiling, managing, handling, and transporting usable material from excavation in a manner that ensures the suitability of usable material at time of placement.

END OF SECTION

SECTION 02203 – TRENCHING

SECTION 02203 – TRENCHING, PART 2 - MATERIALS, Article 2.2 BEDDING, ***add*** *the following paragraphs:*

D. Pea gravel, or similar open graded product, shall not be used for bedding.

E. Class A bedding material shall be used for all water and sanitary sewer pipes installed on this project.

F. Class A or B bedding material shall be used for all storm sewer, and culvert pipes installed on this project.

SECTION 02203 – TRENCHING, PART 2 - MATERIALS, Article 2.4 IMPORTED BACKFILL, ***add*** *the following paragraph:*

B. The Misty Lane area is known to have material below the structural section of the road that is unsuitable for use as backfill. For estimating purposes the CONTRACTOR should assume 100% of material below the neatline subcut level that is removed for underground utility installations will be unsuitable for backfill and will require imported backfill.

END OF SECTION

SECTION 02204 – BASE COURSE

SECTION 02204 – BASE COURSE, PART 2 – PRODUCTS Article 2.1, MATERIALS, ***add*** *the following paragraphs:*

E. Base course for this project shall have a maximum Nordic Abrasion Value of 18, as determined by ATM 312, and shall meet the gradation requirements for grading D-1.

F. Related Section – Section 02202 – EXCAVATION AND EMBANKMENT, Article 2.8, 2-INCH MINUS SHOT ROCK

SECTION 02204 – BASE COURSE, PART 3 – EXECUTION, Article 3.1, GENERAL, ***replace*** *Paragraph I with the following paragraph:*

I. The surface of the base course, when using a taut string line or straight edge of adequate length, spanning between two known grade control points (blue top hubs, lip of gutter, edge existing asphalt etc.) shall not show any deviation in excess of 3/8 inch. This shall be checked perpendicular and longitudinally to the grade control points and be documented by the INSPECTOR. The finish surface shall not vary more than 1/2 inch from established grade. Additionally, the algebraic average of all deviations from established grade of the finish base course surface elevations taken at 50-foot intervals shall be less than 0.02 foot.

END OF SECTION

SECTION 02401 – SANITARY SEWER PIPE

SECTION 02401 – SANITARY SEWER PIPE, PART 3 - EXECUTION, Article 3.1, CONSTRUCTION, ***replace*** *paragraph O with the following:*

O. Locate Sanitary Sewer Services shall require that the CONTRACTOR verify the location and depth of each sewer service pipe where crossings occur with new water pipe and storm drain pipes. These verifications will require that the sewer service pipe to be excavated at the storm drain pipe at these crossings so a visual check can be made that no damage occurs during trenching and backfilling operations.

1. The CONTRACTOR shall notify the ENGINEER when each crossing will occur with sufficient time for the ENGINEER to be present during the excavation operations.

2. Some sewer services may be found to be at or close to the roadway and sidewalk subcut levels. The CONTRACTOR shall take all measures necessary to ensure no damage occurs to the sewer services or the main line piping during its operations.

3. The location of each service shall be field referenced so that the service pipe alignment can be marked along the ground prior to subcutting operations. The CONTRACTOR shall spray paint these alignments prior to proof compacting the subgrade.

4. All sewer service piping damaged as a result of the CONTRACTOR's operations shall be repaired at the CONTRACTOR's expense.

END OF SECTION

SECTION 02402 – SANITARY SEWER MANHOLES AND CLEANOUTS

SECTION 02402 – SANITARY SEWER MANHOLES AND CLEANOUTS, PART 3 - EXECUTION, Article 3.1, CONSTRUCTION, Paragraph M, ***delete*** *sub-paragraph 4 and replace with the following:*

4. Rubber grade ring adjustment risers shall be bonded to adjacent surfaces by laying at least 3 beads, a minimum of 5/16" thick of Liquid Nails – Polyurethane Construction Adhesive on each side of the rubber risers or the top surface of the concrete course. Two of the adhesive beads shall be within 1" of the edges of the rubber grade ring adjustment riser, the third shall be equidistant between the two outer beads. The beads shall be continuous around the rubber grade ring adjustment riser.

SECTION 02402 – SANITARY SEWER MANHOLES AND CLEANOUTS, PART 3 – EXECUTION, Article 3.1, CONSTRUCTION, ***add*** *the following paragraphs:*

P. The CONTRACTOR shall repair all imperfections and leaks disclosed by either visual inspection or testing. The method of repair shall be subject to the ENGINEER's approval.

Q. Adjust sanitary manhole to grade shall include new concrete adjusting rings, recycled rubber adjusting rings, new frame and cover adjusted to grade.

END OF SECTION

Add *the following Section*:

SECTION 02404 – SEWAGE PUMP STATION

PART 1 –GENERAL

1.1 DESCRIPTION

A. The CONTRACTOR shall furnish and install a PES Model 183 PUMPTECH engineered systems self-priming, enclosed, surface mounted V-belt driven sewage lift station, including site work, miscellaneous piping and fittings, pump control panels, level controls, spare parts, guard posts,

reinforced concrete slab, wet well waterproofing and all appurtenant WORK, complete and operable, in accordance with the requirements of the Contract Documents and as shown on the Drawings.

B. These specifications describe a station as manufactured by **PUMPTECH, LLC of Canby, Oregon**. This is done to indicate the type, function, standard design, efficiency and quality required and shall not be construed as eliminating from competition other manufacturers with comparable and equal equipment. The station manufacturer shall be required to affix an UNDERWRITER'S LABORATORIES (UL) LABEL attesting to the compliance of that assembled equipment under the PACKAGED PUMP SYSTEMS (QCZJ) UL Listing Category. This label shall be inclusive of the entire station with enclosure so as to demonstrate compliance with the National Electrical Code requirements for working clearances and wiring procedures. Equipment manufactured without this third-party certification label or equipment manufactured by an outside source or "brokered equipment" defined as systems not assembled on the premises of the named manufacturer by that company's employees **WILL NOT** be considered as equal.

1.2 RELATED WORK SPECIFIED ELSEWHERE

A. Section 01300 Contractor Submittals

B. Section 01600 Materials and Equipment

C. Section 02401 Sanitary Sewer Pipe

D. Section 02402 Sanitary Sewer Manholes and Cleanouts

E. Section 03301 Structural Concrete

F. Section 03302 Concrete Structures

F. Division 16 Electrical

1.3 CONTRACTOR SUBMITTALS

A. **Shop Drawings:** Shop drawings shall be submitted to the OWNER in accordance with Section 01300, "Contractor Submittals". Shop Drawings shall contain the following information:

1. Pump name, identification number and specification number.
2. Performance curve and pump data.

3. The CONTRACTOR shall require the manufacturer to indicate points on the H/Q curves, and the limits recommended for stable operation

between which the pumps may be operated without surge, cavitation and vibration. The stable operating range shall be as wide as possible based on actual hydraulic and mechanical tests.

4. Pump detailed description and specification.

5. Electrical data shall be submitted in accordance with the requirements of Division 16. These submittals shall include catalog cut sheets of all equipment, control and wiring diagrams, an elevation of the proposed Local Control Panel showing panel mounted devices, details of enclosure type, single line diagram of power distribution and current draw of the panel. Provide a list of all terminals to receive inputs or to transmit outputs from the Local Control Panel.

6. Assembly and installation Drawings including shaft size, seal, coupling, anchor bolt plan, part nomenclature, material list, outline dimensions and shipping weights.

7. Bypass Pumping Plan as specified.

8. List any exceptions taken or deviations to the Contract Documents.

B. **Operation and Maintenance Manuals:** Prior to startup the CONTRACTOR shall furnish to the OWNER complete operations and maintenance manuals in accordance with Section 01300, "Contractor Submittals".

C. **Field Procedures Manuals:** Instructions for field procedures for erection, adjustments, inspection, and testing shall be provided prior to installation of the pumps.

1.4 GUARANTEES, WARRANTIES AND CERTIFICATIONS

A. The CONTRACTOR shall furnish to the OWNER the manufacturer's written guarantees that the pump equipment will operate with the published efficiencies, heads and flow ranges and meet these specifications.

B. The CONTRACTOR shall furnish to the OWNER a one year written warranty against defects in materials and workmanship. During the warranty period the CONTRACTOR shall replace or repair any defects.

C. A written manufacturer's certificate of satisfactory installation is required for work under this SECTION.

1.5 MANUFACTURER'S SERVICES

A. A manufacturer's representative for the equipment specified herein shall be present at the jobsite for a minimum of two man-days, travel time excluded,

for assistance during installation and startup. Services shall include, installation assistance, coordination with electrical subcontractor, inspection, certification of installation, pump start up, functional testing and operator training.

1.6 SPARE PARTS

A. Parts to be Furnished: The following set of spare parts shall be furnished for the station and delivered to CBJ Wastewater.

1. One complete pump motor meeting the requirements of 2.3 MOTORS\DRIVES.

2. One complete replacement pump shaft seal, suction flap valve and case O-ring gasket.

The parts shall be labeled, and the label shall contain the name of the part and the pump station for which it was provided.

1.7 FACTORY TESTING

A. The completed pump station shall be Hydrostatically Tested to 1.5X working pressure of the pumping system prior to shipment to the job site. All irregularities will be corrected at the factory.

PART 2 -- PRODUCTS

2.1 GENERAL

A. Wherever it is specified that a single manufacturer shall be responsible for the compatible and successful operation of the various components of any pumping equipment, it shall be understood to mean that the CONTRACTOR shall furnish only such pumping equipment as the designated single manufacturer will certify is suitable for use with its equipment and with the further understanding that this in no way constitutes a waiver of any specified requirements.

B. All combinations of manufactured equipment which are provided under these Specifications shall be entirely compatible, and the CONTRACTOR and the designated single manufacturer shall be responsible for the compatible and successful operation of the various components of the units conforming to specified requirements. Each unit of pumping equipment shall incorporate all basic mechanisms, coupling, electric motor or engine drive and unit mounting. All necessary mountings and appurtenances shall be included.

C. Where 2 or more units of the same type and/or size of pumping equipment are required, such units shall all be produced by the same manufacturer.

2.2 STRUCTURES

A. The station base and arch assembly shall be formed with a minimum 5" base side wall, mounting flanges, and based with end caps of ¼" fabricated steel for reinforcement. Suction and discharge connections which pass through the floor shall be of Schedule 40 Galvanized Steel Pipe with 125# flanges or Groove Lock Fittings (located below the floor for connection by contractor). The discharge connection is to be designed to absorb the force main thrust and the suction connections shall be designed to support the entire weight of the suction pipes.

Stations requiring the pump or internal station piping to bear the loading or require the suction pipes to be field grouted in the wet well for support will not be acceptable. The station arch assembly will be of reinforced, fabricated ¼" steel. It shall be provided with a minimum of one 2" and one ¾" electrical service connection on both sides of the arch assembly. All welding shall be in accordance with the standard practices outlined in the welding handbook of the American Welding Society.

B. The station shall be enclosed by two polyester fiberglass lids with gasket and suitable drip lip fastened to the arch with stainless steel hinges. Raising of hoods shall be assisted by pre-charged gas lifting struts capable of holding lids in a fully open position allowing access to the pumps, motors, valving, and controls while still providing shelter for the equipment and maintenance personnel. When closed, the lids shall be provided with a suitable padlock-locking device.

The fiberglass lids shall be manufactured of molded polyester fiberglass resins and designed for structural stability, corrosion resistance, ultra-violet inhibitors and watertight properties. The interior shall be reinforced using chopped strand milled fibers, roving and steel to provide strength. 2lb Urethane sheeting by 1" thick will be embedded within the fiberglass lid to provide a higher level of insulation to the station. The interior surface shall be gel coated with polyester resin; the minimum thickness of the lid shall be .187". All molded fiberglass is to be done in accordance with Society of Plastic's Industries' (S.P.I.) #TS-1226 and ASTM D833-64BT for custom contact molded fiberglass. For aesthetic purposes, and landscaping, the fiberglass hoods shall be of "Evergreen" color.

C. After fabrication, the steel Base/Arch shall be slagged to remove weld splatter and flux. The steel shall then be cleaned with a hot alkaline cleaner to remove oil and grease. The complete unit will then be placed in a hot acid bath "pickling" solution to remove surface rust, mill scale, and similar deposits for a pure metallic surface.

After "pickling," the steel Base/Arch shall be immersed into the molten zinc at approximately 8500 Fahrenheit to a minimum thickness coating of 2.0 ounces of zinc per square foot of surface area. Hot-dipped galvanizing will be done in accordance with American Hot-Dip Galvanizers Association (AHDGA), and A.S.T.M.-A-123 standards. Painted steel bases, requiring periodical painting and ongoing maintenance costs to the owner, shall not be considered as "equal" to hot-dipped galvanizing.

Once Galvanized, AP/Armaflex, flexible foam insulation shall be adhered to the interior of the arch. The foam insulation shall be a minimum of ½" thick.

2.3 PUMPS

A. General

1. Pump detailed description and specification. Pump(s) shall be as manufactured by Hydromatic Pump and be model 40MP. They shall be capable of handling a 3" solid, and have a 125 lb. flanged 4" suction inlet and a 125 lb. flanged 4" discharge outlet.

B. Operating Conditions

1. Each pump shall be capable of pumping raw unscreened sewage or trash and properly selected to perform at these operating conditions:

Capacity …….	100 GPM
Total dynamic head……	30ft TDH
Total dynamic suction lift …….	15FT
The pump will operate at a speed of…….	1,100 RPM
Pump motor……	5HP
Pump motor……	1,800RPM

C. The performance curve submitted for approval shall state, in addition to head and capacity, pump efficiency, solids handling capability, brake horsepower, impeller speed and net positive suction head required by the pump (NPSH).

D. The pump volute case, priming port housing, suction and discharge connections, bearing frame assembly and priming cover shall be high quality gray cast iron, ASTM A-48, Class 30 or better. In addition, the three internal wearing parts of impeller, wear plate and lip plate shall be made of high-quality ductile iron. All external mating parts shall be machined and Buna N rubber O-ring sealed on a beveled edge. Gaskets shall not be acceptable.

E. Inlet suction elbow and wear plate shall be removable as a unit so that all parts of the pump case, including the priming port, shall be accessible for cleaning and inspection without removing the suction or discharge piping. The wear

plate shall be bolted to the inlet elbow. Units that do not have a replaceable suction wear plate shall not be acceptable.

F. A suction type flapper check valve shall be installed in the priming port housing. It shall consist of a flapper valve bracket, stainless steel shaft and bearings, and a Buna-N check valve gasket attached to the flapper bracket with a bolt, washer, weight and nut. The priming cover handle and priming cover arm are to be cast iron. The flapper must be accessible through the top priming port so that it can be removed or installed with the pump volute full of liquid without loss of liquid. The flap valve assembly shall be capable of being removed or replaced without draining the pump case, removing the suction elbow or disturbing the piping connections.

G. The pump shall have two mechanical seals, mounted in tandem, with a separate oil chamber between the seals. John Crane Type 21 seals shall be used with the rotating seal faces being carbon and the stationary seal faces to be ceramic. The inner seal shall be replaceable without disassembly of the seal chamber and without the use of special tools. The inner seal shall be accessible by removing the suction inlet elbow and impeller. Pump-out vanes shall be present on the backside of the impeller to keep contaminants out of the seal area. Units, that require the use of tungsten-carbide seals or foreign manufactured seals shall not be acceptable. Seals shall be locally available. There shall be an oil chamber between the outer seal and the inner seal with a drain plug opening so that the oil consistency may be periodically checked for contamination to determine if inner seal failure has occurred.

Units equipped with opposed mechanical seals shall not be acceptable. The unit shall be designed so that the seal system totally separates the pumping system from the bearing system, assuring that in the event of a seal failure, that contaminants will not enter into the bearing housing and damage the bearings. There shall be a space between the seal chamber and the bearing housing that is completely open, allowing visual inspection of the outer seal by maintenance personnel.

H. The unit shall be equipped with a stainless-steel shaft sleeve under the inner seal to prolong the shaft life by eliminating the possibility of scoring the shaft, should the inner seal fail. Replacement of the seals shall be accomplished without disturbing the suction or discharge piping.

I. Impeller shall be of the two-vane, semi open, non-clog design and have pump-out vanes on the backside to prevent grit and other materials from collecting in the seal area. Impeller shall be either threaded on to the shaft or pressed onto a tapered shaft and keyed. A 300 series stainless steel screw and washer shall lock impeller against reverse rotation on the shaft.

Impeller clearance shall be externally adjustable without the use of shims or requiring the disassembly of the pump unit. Adjustment shall be

accomplished by means of jacking or adjustment bolts located at the end of the bearing housing rotating assembly. Units that do not allow for adjustment of the impeller by external means shall not be acceptable.

J. Impeller shall be used in combination with a replaceable volute lip plate. Where impeller is of full diameter, a flat back plate shall be provided. Where impeller trim is required, a volute lip plate shall be used in combination so as not to lose priming efficiency. Pump shall be capable of operating with various matched impeller trim / lip plate combinations without disturbing the volute case. The flat back plate or volute lip plate shall be replaceable for renewed efficiency.

K. The replaceable wear plate is held to the suction elbow by two Allen head screws. The clearance set between the wear plate and impeller shall be maintained at .015". replacement of the wear plate, impeller and inner seal shall be accomplished through the removable suction elbow.

L. A cast iron bearing housing shall be used for the rotating assembly. The bearing housing shall support the shaft and two roller type ball bearings. Bearings shall be grease or oil lubricated, locally available, and sized for a minimum B10 life of 20,000 hours for normal operations. Bearing shall be sized to withstand all radial and thrust loads that can reasonably be expected during normal operations. The .015" clearance between the impeller and wear plate shall be externally adjustable without the use of shims or requiring disassembly of the pump unit. The outboard bearing is locked into a moveable end cap, so the impeller clearance can be made by adjustment of jacking bolts located at the end of the bearing housing rotating assembly. The bearing housing assembly, which includes the bearings, shaft, seals and impeller, shall be removable as a unit without disturbing the pump volute or piping.

2.4 OPERATION OF PUMPS

A. Misty Lane Lift Station pumps will be used to pump wastewater from the central Bayview Subdivision gravity sanitary sewer system to the western Bayview Subdivision gravity sanitary sewer system, where it will then be pumped from the Horizon Drive Lift Station across the Gastineau Channel to the Mendenhall Wastewater Treatment Plant.

B. For Constant Speed Operation provide H-O-A selector switch. Inputs are provided and programmed into the DLC for a contact of the AUTO position of the selector switch. When the H-O-A is placed into the HAND position, the DLC will be bypassed and the pump should run.

If the contact to the H-O-A selector switch is in the OFF position and input of the DLC is not closed, the DLC sets the status of that pump to Out-Of-Service. When the H-O-A is placed into the AUTO position, the pump is available to run as instructed by the DLC.

C. For Constant Speed Manual Operation performed by touching the HAND, OFF or AUTO buttons on the Pump Status page will select the mode of operation. Touching the HAND button will start the pump in manual mode.

This "soft" H-O-A is provided in the DLC to enable remote operation of the pumps, either through the Remote Access system, DDE program, through the Web Server system.

D. For Constant Speed Automatic Operation the pumps are available for automatic run when the AUTO selector switch input is enabled and the "soft" H-O-A is in the AUTO mode.

The analog level signal is converted to tenths of feet and that value is compared to the start and stop set points that are entered into the system by the user. On rising level, when the level is equal to or greater than the lead pump start set point, the lead pump will start. If the level continues to rise beyond the start lag pump set point, the lag pump will start. On falling level, the pumps will sequence off as the level drops below the respective stop set points.

2.5 MOTORS/DRIVES

A. The pump motors shall be Baldor Super E Premium Efficient, open drip-proof, ball bearing, induction motors. The motors shall be of NEMA design B with normal starting torque and low starting current, Class F insulation, rated for continuous duty, and a 1.15 service factor. Motors shall be suitable for 1 Phase, 60 Hertz, 240 Volt power, and of 5 Horsepower at 1800 RPM.

B. The pump shall be driven by the motor through a multiple belt V-Belt drive. The drive shall be selected for proper pump speed to meet the specified operating conditions.

Each pump drive will have a minimum of two V-Belts properly selected to transmit the designed horsepower with a minimum service factor of 1.5 after efficiency corrections based on arch of contact to insure sufficient safety factors for the service specified.

C. The V-Belt guards are constructed of a fabricated steel. The removable back slides into a channel incorporated into the main body of the guard and the front panel incorporates ventilation / viewing slots. The guards are powder coated Safety Orange. The guards must be OSHA/ANSI Compliant.

2.6 PIPING

A. Interior suction piping located within the pump station shall be 4" dia, Schedule 40 Welded Steel Pipe. After the piping is fabricated, it will be hot

dip galvanized to prevent corrosion. The interior discharge piping located within the pump station shall be 4" dia and made up of fittings that are Cast Iron with 125# flanges and pipe that is Ductile Iron class 53 cement lined.

The sections of pipe that penetrate the floor of the pump station shall be Schedule 40 Welded Steel and have a full weld around the circumference of the pipe OD to connect it to the station floor. These pipe penetrations will be galvanized along with the base of the station as one piece. Both ends of each pipe shall be groove lock style connections to allow for various connection options. Groove lock to flange adaptors will be provided.

Exterior suction piping located within the wet well shall be 4" dia, PVC with standard dimension ratio (SDR) of 35. The exterior discharge piping located within the wet well shall be 4" C900, pressure class 100. All pipe shall meet the requirements of Section 02401 Sanitary Sewer Pipe.

2.7 VALVES

A. Valves shall be of the non-lubricated eccentric type with an elastomer covering all seating surfaces. The elastomer shall be suitable for the service intended. Flanged valves shall be manufactured in accordance with ANSI B16.1 including facing, drilling and flange thickness.

Valve bodies shall be ASTM A-126 Class B cast iron. Valves 3" and larger shall be furnished with a welded-in overlay seat of not less than 90% nickel in accordance with AWWA C507-73. Sprayed, plated or screwed-in seats are not acceptable.

Plugs shall be of ASTM A-536 Grade 65-45-12 in compliance with AWWA C-504 Section 2.2. The plugs shall be of one piece construction with PTFE thrust bearings on the upper and lower bearing journals to reduce torque and prevent dirt and grit from entering the bearing and seal area.

B. Check valves shall be of the Wafer Style with external lever and spring to ensure tight shutoff. The pressure rating shall be 150 psi. Valve bodies shall be of ASTM A-126 class B cast iron. Disc and disc arm shall be of ASTM A-743 Grade CF8M stainless steel. The valve shaft shall be manufactured of ASTM A-276 Grade 316 stainless steel and supported by two (2) SAE 660 bronze bearings. Shaft sealing shall be accomplished by multiple rings of braided PTFE Teflon rings. Packing shall be utilized on each side of the valve.

The closure spring shall be manufactured of ASTM A-228 spring steel. The spring arm shall be constructed of carbon steel ASTM A-36 and designed to provide disc position indication. The spring arm shall be capable of overriding the spring action for use as an override lever. The valve seat shall be of Buna-n O-ring material and retained in a dovetail groove in the valve body. Mounted with each check valve will be a bracket for installation of "no flow"

limit switches to monitor pump prime and turn off pump if pump fails to prime before damaging heat build up.

2.8 MISCELLANEOUS

A. Concrete and reinforcing steel shall comply with the requirements of Sections 03301 – Structural Concrete and 03302 – Concrete Structures.

B. Bollards shall meet requirements of Hydrant Guard Post CBJ Standard Detail 404.

C. Manhole cover and frame shall meet the requirements of Section 02402 Sanitary Sewer Manholes and Cleanouts.

D. Waterproofing shall meet the requirements of Section 02402 Sanitary Sewer Manholes and Cleanouts.

2.9 ELECTRICAL

A. All electrical equipment shall comply with the requirements of Division 16.

PART 3 – EXECUTION

3.1 GENERAL

A. The pumps, piping and controls shall be installed in accordance with the manufacturer's instructions and recommendations at the locations shown. Installation shall include furnishing the required oil and grease for initial operation in accordance with the manufacturer's recommendations. Anchor bolts shall be set only after the discharge piping has been properly installed, to ensure exact fit with embedded piping components.

B. Manholes, piping and appurtenances shall be installed consistent with methods and requirements of the Contract Documents as a whole.

C. Piping to be installed in accordance with accepted industry standards. Run piping parallel to walls of wet wells and vaults as shown on the Drawings. Completed installation to present a neat and orderly appearance. Coordinate wall penetrations to ensure placement of piping can be accomplished as shown and specified.

D. Support piping as shown on the Drawings. Allow adequate clearance for placement of flange nuts and bolts.

E. Flange bolts shall be tightened so the gasket is uniformly compressed and sealed. Bolt threads and nut-bearing surfaces shall be lubricated before tightening. Do not distort flanges.

F. Holes for embedded bolts shall be installed with care so that multiple or oversized holes are not drilled. In the event that holes are not drilled properly in accordance with the manufacturer's recommendation, repairs shall be made with non-shrink grout in a manner that the full integrity of the structure is achieved as intended.

3.2 BYPASS PUMPING

A. Scope

1. The Contractor is required to furnish all materials, labor, equipment, power, maintenance, etc. to implement temporary uninterrupted diversion of wastewater flows around the lift station for the duration of time required to complete the WORK detailed.

2. The design, installation, and operation of the bypass pumping system shall be the Contractors responsibility. Details for bypass assembly provided in the plans shall only dictate the method of connecting to the existing force main. Where other means and methods of bypass pumping are developed and submitted in the bypass plan which do not require connecting to the existing force main, the Contractor bypass plan may supersede the connection detailed in the plans.

B. Bypass Plan

1. The Contractor bypass plan to be submitted to the Engineer shall include at minimum the following items:

a. Detailed description of sequence of installation, operation, and decommissioning of bypass system.

b. Sewer plugging method and types of plugs.

c. Number, size, material, location, and method of installing suction piping.

d. Number, size, material, location, and method of installing discharge piping.

e. Bypass pump sizes, capacities, number of each size on site, and power requirements.

f. Standby power method, size, and location.

g. Method of protecting discharge manholes or structures from erosion and damage.

h. Thrust restraints.

i. Calculations of static and dynamic head, system curve, pump performance curve, and anticipated system performance.

j. Plan drawing indicating location, length and size of bypass lines.

2. Bypass plan shall be submitted as a single packaged document for Engineer review as a complete plan.

C. Equipment

1. Pumps shall be automatic self-priming units that do not require the Contractor to manually operate. Pumps may be electric, or diesel driven.

2. Contractor shall provide stop/start controls for the pumps.

3. One standby pump of equivalent size of the duty pump shall be provided at each location of bypass.

D. Installation and Removal

1. Contractor may make direct connection to the existing sewer force main only in the location indicated on the plans.

2. Plugging or blocking of sewage flow shall not cause damage to the existing collection system piping. Contractor shall be responsible for damage to the system as a result of bypass operations.

3. Upon completion of the bypass pumping operation, the Contractor shall restore all piping, manholes, force main, or other parts of the collection system to pre-construction condition and restore sewer flows in a manner so as to not cause surge or excessive sedimentation in the collection system.

3.3 FIELD TESTS OF PUMPS

A. All pumping units shall be field tested after installation, in accordance with the Contract Documents, to demonstrate satisfactory operation, without causing excessive noise, vibration, cavitation, and overheating of the bearings. The field testing shall be performed in the presence of an experienced field representative of the manufacturer of each major item of equipment, who shall supervise the following tasks and shall certify in

writing that the equipment and controls have been properly installed, aligned, lubricated, adjusted, and readied for operation:

1. Start-up, check, and operate the equipment under normal operating conditions.

2. Pump performance shall be documented by obtaining concurrent readings, showing motor voltage, amperage, pump suction head, pump discharge head and pump flow via timed fill and drawdown calculations. Each power lead to the motor shall be checked for proper current balance.

3. Electrical and instrumentation testing shall conform to the requirements of Division 16 Electrical.

4. The field testing shall be witnessed by the OWNER or its representative. In the event any of the pumping equipment fails to meet the above test requirements, it shall be modified and retested in accordance with the requirements of these Specifications. The CONTRACTOR shall then certify in writing that the equipment has been satisfactorily tested, and that all final adjustments thereto have been made. Certification shall include date of final acceptance test, as well as a listing of all persons present during tests, and resulting test data. The costs of all WORK performed in this Paragraph by factory-trained representatives shall be borne by the CONTRACTOR. The OWNER will pay for costs of power and water. When available, the OWNER's operating personnel will provide assistance in the field testing.

3.5 TESTING

A. All testing of force main pipes shall conform to Section 02401 – Sanitary Sewer Pipe.

END OF SECTION

SECTION 02501 – STORM SEWER PIPE

SECTION 02501 – STORM SEWER PIPE, PART 2 – PRODUCTS, Article 2.6, CORRUGATED POLYETHYLENE PIPE, ***delete*** *paragraphs B and C and* ***replace*** *with the following:*

B. Pipe shall be joined with “ADS, Inc. N-12” (bell-and-spigot) water-tight (WTIB), or approved equal, meeting the requirements of AASHTO M252 or AASHTO M 294 or ASTM F2306. The pipe joining system shall be a

water-tight integral bell & gasketed spigot meeting the requirements of ASTM D3212 or equivalent standard.

E. The bell-and-spigot joint shall be water-tight and incorporate a gasket meeting the requirements of ASTM F477 or equivalent standard. Gaskets shall be installed in the bell, or on the pipe, by the pipe manufacturer and covered with a removable wrap to ensure the gasket is free from debris at the time of installation. A joint lubricant shall be used on the gasket and bell during assembly.

SECTION 02501 – STORM SEWER PIPE, PART 2 – PRODUCTS, ***add*** the following Article:

2.10 6-INCH UNDERDRAIN

A. Pipe shall be perforated, smooth interior pipe and shall meet the requirements of Article 2.6, corrugated polyethylene pipe, of this Section.

B. Drainage rock shall be 2-inch minus shot rock and shall meet the requirements of Section 02202 – Excavation and Embankment, Article 2.8, 2-Inch Minus Shot Rock.

C. Filter cloth shall be Type A and shall meet the requirements of Section 02714 – Filter Cloth.

SECTION 02501 – STORM SEWER PIPE, PART 3 – EXECUTION, ***add*** the following Article:

3.2 PRESSURE TESTING

A. For storm sewer pipes and culverts with fittings or joints that cross over or under water pipe, the contractor shall perform low pressure air testing to prove the watertightness of the installed and backfilled storm sewer pipe or culvert run. Testing shall be performed in accordance with SECTION 02401 – SANITARY SEWER PIPE, PART 3 – EXECUTION, Article 3.3, FILTRATION TESTING (USING AIR).

END SECTION

SECTION 02502 – STORM SEWER MANHOLES, INLETS, AND CATCH BASINS

SECTION 02502 – STORM SEWER MANHOLES, INLETS AND CATCH BASINS, PART 3 - EXECUTION, Article 3.1, CONSTRUCTION, ***delete*** *paragraph P and* ***replace*** *with the following:*

P. All storm drain manholes and storm drain catch basin structures shall be constructed on a pad of 2" minus shot rock a minimum 24-inches thick to provide a stable base pad.

END OF SECTION

SECTION 02601 – WATER PIPE

SECTION 02601 – WATER PIPE, PART 2 – PRODUCTS, Article 2.3, FITTINGS, ***delete*** *paragraph J and* ***replace*** *with the following:*

J. Electrofusion couplers are not intended to be used on this project. Not having a fusion machine capable of being placed in the excavation to accomplish butt fusion is not an acceptable reason for use of an electrofusion coupler.

SECTION 02601 – WATER PIPE, PART 2 – PRODUCTS, Article 2.9, TEMPORARY WATER SYSTEM, ***add*** *the following paragraph:*

D. Plans must be submitted for the temporary water lines that address flushing, disinfection and microbial testing before being placed into service, and that show that the water lines meet Standard NSF-61 and that the temporary system will have appropriate cross connection controls.

SECTION 02601 – WATER PIPE, PART 3 – EXECUTION, Article 3.5, HYDROSTATIC TESTING, ***add*** *the following paragraphs:*

K. At no time shall the CONTRACTOR pressure test against existing valves, plugs, caps, fire hydrants or curb stops. At no time shall the CONTRACTOR use disinfection water or untreated water to pressure test against any valve or curb stop that is connected to a public water system.

L. Pressure testing shall be completed for the entire length of new water pipe and services to the limits where new water pipes and services connect to existing water pipes and services, including pressure testing to the limits of connection to existing fire hydrant legs. The CONTRACTOR is responsible for providing all temporary or permanent joint restraints, thrust blocks, fittings, caps, plugs, curb stops and valves necessary for completion of pressure testing activities in accordance with SECTION 02601 and to the satisfaction of the ENGINEER.

SECTION 02601 – WATER PIPE, PART 3 – EXECUTION, Article 3.8, CONNECTIONS TO EXISTING PIPES, ***add*** *the following paragraph:*

C. All flushing, pressure testing, and disinfection of new water pipes shall be completed in accordance with SECTION 02601 and accepted by the

ENGINEER prior to making final or permanent connections to existing water pipes and services. At no time during flushing, pressure testing or disinfection activities shall there be a temporary or permanent cross-connection between new water pipe and existing water pipe or services, unless otherwise approved by the ENGINEER or a backflow prevention assembly meeting ANSI/AWWA Standards C510-97 or C511-97 is used to ensure no backflow into the existing and unprotected public water system occurs.

END OF SECTION

SECTION 02605 – WATER SERVICES

SECTION 02605 – WATER SERVICES, PART 3 – EXECUTION, Article 3.1, CONSTRUCTION, ***add*** *the following paragraphs:*

I. The location of the existing water services lines shown on the drawings are assumed based on limited as-built information, field locates and resident comments and are not considered reliable indications of actual locations. The CONTRACTOR is responsible for all work required to field locate the existing service lines to verify their location. These services may not run in a straight line to the water main as shown. The CONTRACTOR shall also verify the actual point of connection at the property line for the new water service connection location.

J. Each electrofusion service saddle shall be pressure tested to 120 psi after completion of the electrofusion process and prior to tapping into the mainline. It shall hold the test pressure for at least 5 minutes, any drop in pressure will indicate a faulty connection and require installation and testing of a new electrofusion saddle. The intent of this informal test is verification of a sound electrofusion connection to the mainline. This testing requirement does not remove any of the requirements for pressure testing the entire water system as specified in Section 02601 – Water Pipe.

END OF SECTION

SECTION 02702 – CONSTRUCTION SURVEYING

SECTION 02702 – CONSTRUCTION SURVEYING, PART 3 – EXECUTION, Article 3.1, CONSTRUCTION, ***add*** *the following paragraphs:*

M. A closed level loop is required through Temporary Bench Marks (TBMs) listed in the Drawings. No side shots will be permitted. A copy of the surveyor's notes shall be provided to the ENGINEER. No payment will be

made for Pay Item No. 2702.1 until the ENGINEER has received a copy of these surveyor's notes.

N. Global Position System (GPS) survey methods shall not be used for grading control unless approved in writing by the ENGINEER.

END OF SECTION

SECTION 02709 – TOPSOIL

SECTION 02709 – TOPSOIL, PART 2 – PRODUCTS, Article 2.1, MATERIALS, ***revise*** *the first sentence of paragraph C. to read:*

C. Topsoil shall contain not less than 8%, or more than 20% organic matter by weight, as determined by loss-on-ignition of over-dried samples in accordance with ASTM T-6.

SECTION 02709 – TOPSOIL, PART 3 – EXECUTION, Article 3.1, CONSTRUCTION, ***revise*** *paragraph a to read:*

A. All areas beyond the roadway shoulder and driveway edges that require regrading or are otherwise disturbed during construction, shall be graded to neat, uniform well-drained grade lines and appearance, as determined by the ENGINEER. These areas shall be hydroseeded, unless otherwise shown on the Drawings, or directed by the ENGINEER.

SECTION 02709 – TOPSOIL, PART 3 – EXECUTION, Article 3.1, CONSTRUCTION, ***add*** *the following:*

F. No topsoil shall be placed on the slope, ditch or drainage swales areas unless these areas can be finish graded and seeded within 30 days of the date originally placed. Topsoil shall be consolidated/rolled by water filled lawn roller or other Engineer approved method prior to application of seed. Topsoil placed, but not finish graded or seeded within 30 days, will be deducted from payment until the topsoil has been rescarified, regraded and supplemented with additional topsoil as required to provide a smooth, well graded and scarified surface suitable for seeding, as determined by the ENGINEER. All additional topsoil required after 30 days of the original placement will not be measured for payment, but will be considered incidental to other WORK.

END OF SECTION

SECTION 02716 – REMOVE AND DISPOSE OF CULVERT PIPE

SECTION 02716 – REMOVE AND DISPOSE OF CULVERT PIPE, ***delete*** *in its entirety and* ***replace*** *with the following Section:*

SECTION 02716 – REMOVE AND DISPOSE OF EXISTING SANITARY SEWER AND STORM DRAINAGE SYSTEMS

PART 1 - GENERAL

1.1 DESCRIPTION

A. The WORK under this Section includes providing all labor, tools and equipment necessary for removal and disposal of existing sanitary sewer and storm drain pipe, storm drain structures and sanitary sewer structures including sanitary sewer cleanouts within the Project limits, as shown on the Drawings and as directed by the ENGINEER.

The WORK also includes the salvage of existing Misty Lane Lift Station skid, fiberglass enclosure, pumps, piping, valves, motors, control panel, alarms, sensors, meters, hardware, electrical gear and equipment and miscellaneous ancillary items. The lift station shall be salvaged as a single unit as best as practical and delivered to CBJ Wastewater.

E. The CONTRACTOR shall furnish materials, equipment, and labor necessary to perform and complete WORK called for in the Contract Documents.

F. Prior to the start of the WORK, the CONTRACTOR shall coordinate with the OWNER regarding items from the existing lift station to be delivered to CBJ Wastewater by the CONTRACTOR. The CONTRACTOR shall dispose of all other items at the CONTRACTOR’s expense.

1.2 REFERENCE SPECIFICATIONS, CODES, AND STANDARDS

A. All codes, as referenced herein, are specified in Section 01090, "Reference Standards."

1.3 CONTRACTOR SUBMITTALS

A. **General:** Submittals shall be in accordance with Section 01300, "Contractor Submittals."

1.4 JOB CONDITIONS

A. **Condition of Facilities:** OWNER assumes no responsibility for actual condition of facilities. The CONTRACTOR shall visit the site and inspect the existing facilities.

PART 2 - PRODUCTS (Not Used)

PART 3 - EXECUTION

3.1 GENERAL

A. All existing storm drainage and sewer pipe, underdrains, culverts, and drains 4-inches or larger in diameter, as shown on the Drawings and where discovered within the Project limits, shall be removed and disposed of in accordance with the Contract Documents.

B. All existing concrete headwalls, trashracks, storm drain and sewer manholes, catch basins, and other storm water conveyance structures, as shown on the Drawings and where discovered within the Project limits, shall be removed and disposed of in accordance with the Contract Documents.

C. All materials removed during performance of the WORK described herein shall become the property and responsibility of the CONTRACTOR.

D. Voids shall be backfilled with suitable material to match the adjacent ground surface or bottom of subcut, and placement of material used for backfill shall not exceed 1-foot lifts. Usable material from excavation may be used as backfill as approved by the ENGINEER, and all backfill placed shall be compacted to the satisfaction of the ENGINEER.

E. Abandonment of existing storm sewer structures below grade, or filling of storm drain pipes and culverts with concrete slurry, will not be permitted on this Project.

3.2 PROTECTION

A. Safe passage of persons around area of WORK shall be ensured. Operations shall be conducted to prevent damage to adjacent buildings, structures, other facilities, and people.

B. Existing landscaping materials, structures, and appurtenances, which are not to be removed or salvaged shall be protected and maintained as necessary and in accordance with Section 01530, "Protection of Existing Facilities."

C. The CONTRACTOR shall protect and maintain conduits, drains, sewers, pipes, and wires that are to remain on the property.

3.3 CLEANING

A. During and upon completion of work, the CONTRACTOR shall promptly remove unused tools and equipment, surplus materials, rubbish, debris, and dust and shall leave areas affected by work in a clean, approved condition in accordance with Section 01700, "Project Closeout."

END OF SECTION

SECTION 02717 – STORM AND SANITARY STRUCTURE REMOVAL

SECTION 02717 – STORM AND SANITARY STRUCTURE REMOVAL, ***delete*** *in its entirety and* ***replace*** *with the following Section:*

SECTION 02717 – REMOVE AND ABANDON EXISTING WATER SYSTEM

PART 1 - GENERAL

1.1 DESCRIPTION

A. The WORK under this Section includes providing all labor, tools and equipment necessary for removal and disposal of portions of the existing water system within the Project limits, as shown on the Drawings and as directed by the ENGINEER.

B. The WORK under this Section also includes providing all labor, tools, equipment and materials necessary for filling existing water pipes with Cement Slurry prior to abandonment in-place, as shown on the Drawings and as directed by the ENGINEER.

PART 2 - PRODUCTS

2.1 MATERIALS

A. Cement Slurry used to fill conveyance structures prior to abandonment shall consist of a flowable mixture of cement, water, sand, and additives that, when cured for three (3) days, will have a minimum compressive strength of 150 pounds per square inch (psi). A Cement Slurry mix design shall be submitted by the CONTRACTOR for approval by the ENGINEER prior to use.

PART 3 - EXECUTION

3.1 GENERAL

A. Existing water main pipe, services, water valves, valve boxes, fittings, thrust blocks, and other water system components shall be removed in their

entirety and disposed of in accordance with the Contract Documents, as shown on the Drawings and directed by the ENGINEER.

B. All materials removed during performance of the WORK described herein shall become the property and responsibility of the CONTRACTOR.

C. Voids shall be backfilled with suitable material to match the adjacent ground surface or bottom of subcut, and placement of material used for backfill shall not exceed 1-foot lifts. Usable material from excavation may be used as backfill as approved by the ENGINEER, and all backfill placed shall be compacted to the satisfaction of the ENGINEER.

D. Where shown on the Drawings, existing water pipes shall be abandoned in-place by filling with Cement Slurry to a minimum of eighty percent (80%) capacity of the calculated total volume based on the length and inside diameter of the conveyance structure being abandoned. If necessary, all pumps, vent tubes, and WORK to open or remove additional sections of the existing conveyance structure for meeting the minimum volume filled requirement shall be the responsibility of the CONTRACTOR and is considered incidental to other WORK under the Contract.

END OF SECTION

***Add** the following Section:*

SECTION 02722 – UTILITY CONDUIT RELOCATION

PART 1 - GENERAL

1.1 DESCRIPTION

A. The WORK under this Section includes subcontracting or otherwise arranging with AEL&P, ACS Telephone, or GCI Cable Network for any work with the power, telephone and television services, respectively, for the WORK shown on the Drawings or described in this Section.

PART 2 - PRODUCTS

2.1 MATERIALS

A. Materials shall be as specified by the owner of the private utility service company.

B. Materials shall conform to the requirements of the National Electrical Code.

PART 3 - EXECUTION

3.1 CONSTRUCTION

A. Construction shall be in accordance with the agreement arranged by the CONTRACTOR with the owner of the utility service being relocated, except that the Drawings and Specifications shall take precedence in the event of a conflict.

B. All WORK with the electrical utilities shall conform to the requirements and standards established by the private utility companies, and shall meet all applicable codes and regulations.

C. The WORK under this Section does not include excavating, backfilling, or any other work under, around, or along electrical utilities that are not in direct conflict with other work.

3.2 ELECTRICAL CONDUCTOR RELOCATION

A. The WORK under this Item include only those electrical conduit or conductor relocations required due to a direct conflict with new piping or structures, that are 3-inches or less in diameter, and not encased in concrete; or ditches.

END OF SECTION

SECTION 02801 – ASPHALT CONCRETE PAVEMENT

SECTION 02801 – ASPHALT CONCRETE PAVEMENT, PART 1 - GENERAL, Article 1.1, DESCRIPTION, ***revise*** *paragraph B as follows:*

B. Asphaltic concrete mix for this Project shall be Type II-A, Class B.

C. Asphalt concrete mix for sidewalks, driveways and hydrant pads may be either Type III, Class B, or Type II-A, Class B. See Table 02801-1 and Table 02801-2.

SECTION 02801 – ASPHALT CONCRETE PAVEMENT, PART 1 – GENERAL, Article 1.1, DESCRIPTION, ***revise*** TABLE 02801-1, ASPHALTIC CONCRETE MIX REQUIREMENTS, *as follows:*

Design Parameters	Class A	Class B
Voids in total mix, percent	2.5 – 4.0	2.5 – 4.0%
Percent oil content	5.8 – 6.8	5.8 – 6.8%

SECTION 02801 – **ASPHALT CONCRETE PAVEMENT**, PART 2 – PRODUCTS, Article 2.1, COMPOSITION OF ASPHALT CONCRETE MIXTURES – JOB MIX DESIGN, paragraph C., ***delete*** *subparagraph 6 and* ***replace*** *with the following:*

6. The mix design shall be 50 blow Marshall Method.

SECTION 02801 – **ASPHALT CONCRETE PAVEMENT**, PART 2 - PRODUCTS, Article 2.3, ASPHALT MATERIALS, ***revise*** *paragraph B as follows:*

B. Asphalt cement shall be designated PG 58-28 Plus.

SECTION 02801 – **ASPHALT CONCRETE PAVEMENT**, PART 2 - PRODUCTS, **add** the following section:

2.6 RECLAIMED ASPHALT PAVEMENT

A. Reclaimed Asphalt Pavement (RAP) may be used in the asphalt mix up to 20% of the total mix.

B. RAP will be available at no cost from the CBJ Lemon Creek Stockpile. The contractor will notify Michael Eich, CBJ Material Sources Manager, 500-4401, of quantity needed, to coordinate access and for Lemon Creek Gravel Pit permit compliance requirements, prior to taking any RAP. The Contractor shall weigh each load at the CBJ scales and record on a CBJ scale ticket. The CBJ makes no guarantees of the quantity or quality of the RAP.

C. The Contractor shall provide a mix design showing the inclusion of the specified percentage of RAP according to the mix design requirements in this section.

D. Use of RAP in the Contractor's asphalt mix does not nullify any of the other specification requirements or associated asphalt quality deductions.

SECTION 02801 – **ASPHALT CONCRETE PAVEMENT**, PART 3 - EXECUTION, Article 3.2, EQUIPMENT, Paragraph C, ***delete*** *item 2 and replace with the following:*

2. Each truck shall have a watertight canvas cover of such size as to extend at least one foot over the sides and end of the truck bed and be adequately secured to protect the asphalt concrete mixture. The use of canvas covers will be required at all times.

3. The Contractor shall make the trucks to be used for hauling the asphalt concrete mixture available for inspection by the Engineer prior to paving day and shall be identified in the Paving Plan. Trucks that do not meet the requirements of this section may be rejected by the Engineer and not allowed on the project unless the deficiencies are remedied and approved

by the Engineer in advance of hauling asphalt. Use of trucks not approved for delivery by the Engineer may result in the rejection of the asphalt concrete mixture within the unapproved truck.

SECTION 02801 – **ASPHALT CONCRETE PAVEMENT**, PART 3 - EXECUTION, Article 3.2, EQUIPMENT, ***add*** *the following paragraph:*

E. Heavy, full size, self-propelled laydown units that will place concentrated loading on curb and gutter sufficient to cause breakage, or other damage to the concrete, will not be permitted.

SECTION 02801 – **ASPHALT CONCRETE PAVEMENT**, PART 3 - EXECUTION, Article 3.8, SPREADING AND PLACING, ***delete*** *paragraph H and* ***replace*** *with the following:*

H. Manhole frame and covers and water valve boxes shall be set to final grade in accordance to CBJ Standard Details 205 – MANHOLE HEIGHTS and 407 – MAINLINE VALVE, prior to paving operations. If the cover lugs or frame, whichever is higher, does not meet the required depression range following the finish paving operations, the CONTRACTOR shall construct a transition slab with asphalt pavement overlay, per CBJ Standard 126 – CONCRETE COLLAR or as approved by the Engineer, at no additional cost to the OWNER.

SECTION 02801 – **ASPHALT CONCRETE PAVEMENT**, PART 3 - EXECUTION, Article 3.8, SPREADING AND PLACING, ***add*** *the following paragraph:*

K. The Contractor shall hold in a pre-paving conference on site to review and verify the accuracy of the Paving Plan prior to paving day. The paving foreman shall be present to explain each of the operational details included in the paving plan.

SECTION 02801 -- ASPHALT CONCRETE PAVEMENT, PART 3 – EXECUTION, Article 3.10, JOINTS, ***replace*** Paragraph C with the following*:*

C. Improperly formed joints resulting in surface irregularities or rock segregation shall be removed, full road width, replaced with new material, and thoroughly compacted. The edge of pavement along the centerline joint shall not be allowed to drop below 200 degrees Fahrenheit prior to the asphalt mix form the adjacent lane being placed against this edge.

SECTION 02801 -- ASPHALT CONCRETE PAVEMENT, PART 3 – EXECUTION, Article 3.10, JOINTS, ***add*** *the following paragraph:*

J. All joints with existing asphalt pavement shall be resealed with asphalt cement after the new pavement has cooled to ambient temperature. All joints with concrete gutters found to have a gap shall be blown out using a

weed burner torch, filled with asphalt cement and covered with a layer of dry sand. Excess sand shall be removed and asphalt cement placed on the concrete gutter more than one-inch from the edge of gutter shall be removed using solvent or other approved methods.

SECTION 02801 – ASPHALT CONCRETE PAVEMENT, PART 3 – EXECUTION, Article 3.13, Acceptance Sampling and Testing, ***add*** *the following paragraph:*

K. For each lot of asphalt pavement produced, at least two (2) samples shall be taken by the CONTRACTOR for purposes of acceptance testing by the OWNER. The CONTRACTOR shall split the sample with the OWNER to retain a portion for their use. The sample shall be taken according to proper sampling methods, from the asphalt pavement on the grade.

The deduction amounts will be determined from the OWNER's acceptance testing results. The values will be calculated by averaging the amount of the absolute value of the two tests outside the job mix design tolerance (the difference between the actual test result and the job mix design tolerance range). A test value within the job mix design tolerance will be considered a zero (0) value for averaging the two values. Deduction from the asphalt pavement pay item shall be made at the following amounts:

1. #200 Sieve: the greater of either 1.0% the contract price for asphalt pavement placed within the sampled lot or $500 per each 0.1% outside the job mix design tolerance, not exceeding 6% maximum, of the percent passing the #200 sieve. The allowable tolerance for this Contract shall be +/-1.0% of the target mix design value and shall not exceed the content limits specified in this Contract. If values fall outside of the allowable tolerance, deductions shall be calculated from the mix design target value.

2. Asphalt Content: the greater of either 1.0% of the contract price for asphalt pavement placed within the sampled lot or $500 per each 0.1% outside the allowable job mix design asphalt content tolerance. The allowable asphalt content tolerance for this Contract shall be +/-0.4% of the target job mix design value and not to fall below a value of 5.6%. If values fall outside of the allowable tolerance, deductions shall be calculated from the mix design target value.

The pay deductions for exceeding the job mix design tolerances does not constitute acceptance of a mix that does not meet the specifications. Variations that are excessively large in a lot may be considered for larger deductions or non-payment. Further acceptance testing will be performed to determine if the asphalt pavement specifications have been met. No payment for asphalt pavement will be made for asphalt pavement exceeding job mix design tolerances, or not meeting asphalt pavement specifications,

until additional testing determines whether the asphalt pavement meets all other specifications.

For the purposes of this Contract, one lot of asphalt pavement is defined as 500 tons, or a single day's asphalt pavement production of at least 100 tons.

END OF SECTION

SECTION 03302 – CONCRETE STRUCTURES

SECTION 03302 – CONCRETE STRUCTURES, PART 3 - EXECUTION, ***add*** *the following Articles:*

3.4 CONCRETE HEADWALL WITH HINGED TRASHRACK

A. The concrete headwall shall conform to CBJ Standard Detail 104A – Culvert Headwall with Hinged Trash Rack, with adjustments to match the site conditions and grades, as approved by the ENGINEER. No concrete shall be placed until the formwork has been approved by the ENGINEER.

3.4 CONCRETE HEADWALL WITHOUT HINGED TRASHRACK

A. The headwall shall conform to CBJ Standard Detail 104B – Culvert Headwall without Hinged Trash Rack, with modifications shown in the drawings, including but not limited to a 1h:1v face slope with adjustments to match the site conditions and grades, as approved by the ENGINEER. No concrete shall be placed until the formwork has been approve by the ENGINEER.

END OF SECTION

SECTION 03303 – SIDEWALK, CURB AND GUTTER

SECTION 03303 – SIDEWALK, CURB AND GUTTER, PART 2 - PRODUCTS, Article 2.1, MATERIALS, ***revise*** *paragraph B. to read:*

B. Synthetic fibers shall be used for reinforcement with curb & gutter, valley gutter and concrete driveways. Reinforcing steel or wire mesh shall not be used unless approved by the ENGINEER. Curb & gutter, valley gutter and driveways shall utilize a fibrillated product, 300 mm in length, such as Fibermesh 300, or approved equal. Application rate shall be at least 1.5 pounds per cubic yard of concrete. Fibermesh shall be as manufactured by "SI Concrete Systems" or approved equal.

SECTION 03303 – SIDEWALK, CURB AND GUTTER, PART 3 – EXECUTION, Article 3.1, METHODS OF CONSTRUCTION, ***add*** *the following paragraphs*:

K. All forms for segments between PC's and PT's with a radius less than 100' shall be arced to match the required curvature. No straight forms will be permitted for use within any curved segments with a radius of less than 100'. Straight forms used for any arced segment with a radius of more than 100' shall not exceed 10' in length.

L. The CONTRACTOR shall protect all newly placed concrete from damage of any kind to prevent disfigurement during the curing period. Damaged concrete shall be repaired or replaced to the ENGINEER's satisfaction at no additional cost.

END OF SECTION

Add *the following Section*:

SECTION 16010 – ELECTRICAL SCOPE OF WORK

PART 1 - GENERAL

1.1 RELATED DOCUMENTS

A. Drawings and general provisions of the Contract, including General and Supplementary Conditions and Division 01 Specification Sections, apply to this Section.

1.2 SUMMARY

A. The scope of electrical work for this project includes demolishing the electrical systems for the existing lift station and light pole, demolishing the light pole, providing a new light pole, and providing new electrical systems for the new lift station and light pole.

B. The electrical work shall include, but not be limited to all electrical work, earthwork, concrete, metal fabrication, conduit and wiring, electrical controls, switches, power connections, pull boxes, panel boards, alarming testing, warranties, operations and technical data as required, and any other material and work necessary for a complete, working, and acceptable installation for the Sanitary Sewer Lift Station as shown on the Electrical Drawings and included in Division 16 of these specifications.

C. The electrical work includes fabrication and installation of an

equipment stand, utility meter and communication panel and ancillary items, wiring and installation of the level sensor and floats and pump wiring as required for a complete, working, and acceptable installation for the Sanitary Sewer Lift Station as shown on the Electrical Drawings and included in this Specification Section.

D. The electrical work includes electrical work, earthwork, concrete, conduit and wiring, disconnects, power connections, and testing to provide a new light pole as shown on the Electrical Drawings and included in Division 16 of these specifications.

E. The electrical work does not include configuration or integration of cellular communication panel.

F. The electrical work does not include commissioning the Sanitary Sewer Lift Station

G. All work shown on the electrical Drawings and included in Division 16 of these specifications shall be provided.

END OF SECTION

***Add** the following Section*:

SECTION 16050 – BASIC ELECTRICAL MATERIALS AND METHODS

PART 1 - GENERAL

1.1 RELATED DOCUMENTS

A. Drawings and general provisions of the contract, including General and Supplementary Conditions, apply to this Section.

1.2 SUMMARY

A. This Section includes the following electrical materials and methods:

1. Supporting devices for electrical components.
2. Concrete equipment bases.
3. Electrical identification.
4. Electrical demolition.
5. Cutting and patching for electrical construction.
6. Touchup painting.
7. Meter sockets.

1.3 SUBMITTALS

A. General: Submit each item in this Article according to the Conditions of Section 01300 – CONTRACTOR Submittals.

B. Provide catalog cut sheets providing product data for each type of product specified. Note specifically what component is being submitted when more than one model or version is shown on the cut sheet. Where there is more than one of each type of component (circuit breaker), label the top of each cut sheet with the specific component that the cut sheet applies to.

C. Provide Shop Drawings detailing fabrication and installation of supports and anchorage for electrical items. Show all components of a system and how they relate to each other during installation. Include details of mounting brackets, wiring interconnections, single line diagrams, component layout diagrams for enclosures, materials lists for components in enclosures, wiring schematic diagrams with each wire numbered and each terminal numbered for wiring in enclosures.

1.4 QUALITY ASSURANCE

A. Comply with NFPA 70 for components and installation.

B. Listing and Labeling: Provide products specified in this Section that are listed and labeled.

1. The Terms "Listed and Labeled": As defined in the National Electrical Code, Article 100.
2. Listing and Labeling Agency Qualifications: A "Nationally Recognized Testing Laboratory" (NRTL) as defined in OSHA Regulation 1910.7.

1.5 SEQUENCING AND SCHEDULING

A. Coordinate electrical equipment installation with other trades.

B. Arrange for chases, slots, and openings in building structure during progress of construction to allow for electrical installations.

C. Coordinate installing required supporting devices and set sleeves in poured-in-place concrete and other structural components as they are constructed.

D. Sequence, coordinate, and integrate installing electrical materials and equipment for efficient flow of the WORK.

E. Coordinate connecting electrical systems with exterior underground utilities and services. Comply with requirements of governing regulations, utility requirements, and controlling agencies.

F. Coordinate installing electrical identification after completion of finishing where identification is applied to field-finished surfaces.

PART 2 - PRODUCTS

2.1 SUPPORTING DEVICES

A. Channel and angle support systems, hangers, anchors, sleeves, brackets, fabricated items, and fasteners are designed to provide secure support from the building structure for electrical components.

1. Material: Steel, except as otherwise indicated, protected from corrosion with zinc coating or with treatment of equivalent corrosion resistance using approved alternative finish or inherent material characteristics.
2. Metal Items for Use Outdoors or in Damp Locations: Hot-dip galvanized steel, or type 316L stainless steel, except as otherwise indicated.

B. Steel channel supports have 9/16-inch diameter holes at a maximum of 8 inches o.c., in at least 1 surface.

1. Fittings and accessories mate and match with channels and are from the same manufacturer.

C. Nonmetallic Channel and Angle Systems: Structural-grade, factory-formed, fiberglass-resin channels and angles with 9/16-inch diameter holes at a maximum of 8 inches o.c., in at least 1 surface.

1. Fittings and accessories mate and match with channels or angles and are from the same manufacturer.
2. Fitting and Accessory Material: Same as channels and angles, except metal items may be stainless steel.

D. Raceway and Cable Supports: Manufactured clevis hangers, riser clamps, straps, threaded C-clamps with retainers, ceiling trapeze hangers, wall brackets, and spring steel clamps or "click"- type hangers.

E. Sheet-Metal Sleeves: 0.0276-inch or heavier galvanized sheet steel, round tube, closed with welded longitudinal joint.

F. Pipe Sleeves: ASTM A 53, Type E, Grade A, Schedule 40, galvanized steel, plain ends.

G. Cable Supports for Vertical Conduit: Factory-fabricated assembly consisting of threaded body and insulating wedging plug for nonarmored

electrical cables in riser conduits. Plugs have number and size of conductor gripping holes as required to suit individual risers. Body constructed of malleable iron casting with hot-dip galvanized finish.

H. Expansion Anchors: Red Head, Hilti, or equal. Stainless steel. When mounting devices to concrete, use Hilti products designed for that purpose.

I. Toggle Bolts: All-steel springhead type.

J. Powder-Driven Threaded Studs: Heat-treated steel.

2.2 ELECTRICAL IDENTIFICATION

A. Manufacturer's Standard Products: Where more than one type is listed for a specified application, selection is Installer's option, but provide single type for each application category. Use colors prescribed by ANSI A13.1, NFPA 70, and these Specifications.

B. Raceway and Cable Labels: Conform to ANSI A13.1, Table 3, for minimum size of letters for legend and minimum length of color field for each raceway or cable size.

1. Type: Preprinted, flexible, self-adhesive, vinyl. Legend is overlaminated with a clear, weather- and chemical-resistant coating.
2. Color: Black legend on orange field.
3. Legend: Indicates voltage.

C. Colored Adhesive Marking Tape for Raceways, Wires, and Cables: Self-adhesive vinyl tape not less than 3 mils thick by 1 inch wide.

D. Underground Line Warning Tape: Permanent, bright-colored, detectable, continuous-printed, vinyl tape with the following features:

1. Size: Not less than 4 mils thick by 6 inches wide.
2. Compounded for permanent direct-burial service.
3. Embedded continuous metallic strip or core.
4. Printed legend that indicates type of underground line.

E. Tape Markers: Vinyl or vinyl-cloth, self-adhesive, wraparound type with preprinted numbers and letters.

F. Color-Coding Cable Ties: Type 6/6 nylon, self-locking type. Colors to suit coding scheme.

G. Engraved, Plastic-Laminated Labels, Signs, and Instruction Plates: Engraving stock, melamine plastic laminate punched for mechanical

fasteners 1/16-inch minimum thick for signs up to 20 sq. in., 1/8 inch thick for larger sizes. Engraved legend in black letters on white face.

H. Fasteners for Plastic-Laminated and Metal Signs: Self-tapping stainless-steel screws or No. 10/32 stainless-steel machine screws with nuts and flat and lock washers.

2.3 TOUCHUP PAINT

A. For Equipment: Provided by equipment manufacturer and selected to match equipment finish.

B. For Nonequipment Surfaces: Matching type and color of undamaged, existing adjacent finish.

C. For Galvanized Surfaces: Zinc-rich paint recommended by item manufacturer.

PART 3 - EXECUTION

3.1 EQUIPMENT INSTALLATION REQUIREMENTS

A. Install components and equipment to provide the maximum possible headroom where mounting heights or other location criteria are not indicated.

B. Install items level, plumb, and parallel and perpendicular to other building systems and components, except where otherwise indicated.

C. Install equipment to facilitate service, maintenance, and repair or replacement of components. Connect for ease of disconnecting, with minimum interference with other installations.

D. Give right of way to raceways and piping systems installed at a required slope.

E. Coordinate with all other trades to install electrical equipment without being in conflict with other work. Where devices or equipment is in conflict, work out a solution that accommodates both trades and coordinate solution with owner’s representative. Do not change the design without the engineer’s approval.

F. Keep all equipment in a dry, heated, secure storage area prior to installation. After installation, all equipment shall be kept dry and above 55 degrees Farenheit. If the building can not be kept that warm, do not install any equipment with microprocessors, any access control equipment, any fire

alarm equipment, any video equipment, or any telephone/data/television equipment.

3.2 ELECTRICAL SUPPORTING METHODS

A. Damp Locations and Outdoors: Hot-dip galvanized materials or nonmetallic, U-channel system components. Consider the exterior of the building a damp location.

B. Support Clamps for PVC Raceways: Click-type clamp system.

C. Conform to manufacturer's recommendations for selecting supports.

D. Strength of Supports: Adequate to carry all present and future loads, times a safety factor of at least 4; 200-lb-minimum design load.

3.3 INSTALLATION

A. Install devices to securely and permanently fasten and support electrical components.

B. Raceway Supports: Comply with NFPA 70 and the following requirements:

1. Conform to manufacturer's recommendations for selecting and installing supports.
2. Install individual and multiple raceway hangers and riser clamps to support raceways. Provide U bolts, clamps, attachments, and other hardware necessary for hanger assembly and for securing hanger rods and conduits.
3. Support parallel runs of horizontal raceways together on trapeze- or bracket-type hangers.
4. Spare Capacity: Size supports for multiple conduits so capacity can be increased by a 25 percent minimum in the future.
5. Support individual horizontal raceways with separate, malleable iron pipe hangers or clamps.
6. Hanger Rods: 1/4-inch diameter or larger threaded steel, except as otherwise indicated.
7. Spring Steel Fasteners: Specifically designed for supporting single conduits or tubing. May be used in lieu of malleable iron hangers for 1-1/2-inch and smaller raceways serving lighting and receptacle branch circuits above suspended ceilings and for fastening raceways to channel and slotted angle supports.
8. In vertical runs, arrange support so the load produced by the weight of the raceway and the enclosed conductors is carried entirely by the conduit supports, with no weight load on raceway terminals.

C. Vertical Conductor Supports: Install simultaneously with conductors.

D. Miscellaneous Supports: Install metal channel racks for mounting cabinets, panelboards, disconnects, control enclosures, pull boxes, junction boxes, transformers, and other devices except where components are mounted directly to structural features of adequate strength.

E. Sleeves: Install for cable and raceway penetrations of concrete slabs and walls, except where core-drilled holes are used. Install for cable and raceway penetrations of masonry and fire-rated gypsum walls and of all other fire-rated floor and wall assemblies. Install sleeves during erection of concrete and masonry walls.

F. Fastening: Unless otherwise indicated, securely fasten electrical items and their supporting hardware to the building structure. Perform fastening according to the following:

1. Fasten by means of wood screws or screw-type nails on wood; toggle bolts on hollow masonry units; concrete inserts or expansion bolts on concrete or solid masonry; and by machine screws, welded threaded studs, or spring-tension clamps on steel.
2. Threaded studs driven by a powder charge and provided with lock washers and nuts may be used instead of expansion bolts, machine screws, or wood screws.
3. Drill holes in concrete beams so holes more than 1-1/2 inches deep do not cut main reinforcing bars.
4. Drill holes in concrete so holes more than 3/4 inch deep do not cut main reinforcing bars.
5. Fill and seal holes drilled in concrete and not used.
6. Select fasteners so the load applied to any fastener does not exceed 25 percent of the proof-test load.

G. Install identification devices where required.

1. Install labels where indicated and at locations for best convenience of viewing without interference with operation and maintenance of equipment.
2. Coordinate names, abbreviations, colors, and other designations used for electrical identification with corresponding designations indicated on the contract documents or required by codes and standards. Use consistent designations throughout the Project.
3. Self-Adhesive Identification Products: Clean surfaces of dust, loose material, and oily films before applying.
4. Tag or label power circuits for future connection and circuits in raceways and enclosures with other circuits. Identify source and circuit numbers in each cabinet, pull box, junction box, and outlet box. Color coding may be used for voltage and phase indication.

5. Identify Paths of Underground Electrical Lines: During trench backfilling, for exterior underground power, control, signal, and communication lines, install continuous underground plastic line marker located directly above power and communication lines. Locate 6 to 8 inches below finished grade. Where multiple lines installed in a common trench or concrete envelope do not exceed an overall width of 16 inches, use a single line marker.
6. For panelboards, provide framed, typed circuit schedules with explicit description and identification of items controlled by each individual breaker.

H. Store all material and equipment in a dry, heated area until it is installed. Keep all material dry and if it has printed circuit boards or any other electronic components, keep it in a dry heated location after it is installed.

I. Replace all materials and equipment damaged during construction.

J. All materials and equipment shall be new unless otherwise noted.

3.4 DEMOLITION

A. Where electrical WORK to remain is damaged or disturbed in the course of the WORK, remove damaged portions and install new products of equal capacity, quality, and functionality.

B. Keep all existing electrical systems on the project site fully operational during the course of the WORK

3.5 CUTTING AND PATCHING

A. Cut, channel, chase, and drill floors, walls, partitions, ceilings, and other surfaces necessary for electrical installations. Perform cutting by skilled mechanics of the trades involved.

B. Repair disturbed surfaces to match adjacent undisturbed surfaces.

3.6 TOUCH-UP PAINTING

A. Thoroughly clean damaged areas and provide primer, intermediate, and finish coats to match the existing color of adjacent surface.

B. Follow paint manufacturer's written instructions for surface preparation and for timing and application of successive coats.

END OF SECTION

***Add** the following Section*:

SECTION 16060 – GROUNDING AND BONDING

PART 1 - GENERAL

1.1 RELATED DOCUMENTS

A. Drawings and general provisions of the Contract, including General and Supplementary Conditions and Division 01 Specification Sections, apply to this Section.

1.2 SUMMARY

A. Section includes grounding and bonding systems and equipment.

1.3 QUALITY ASSURANCE

A. Electrical Components, Devices, and Accessories: Listed and labeled as defined in NFPA 70, by a qualified testing agency, and marked for intended location and application.

B. Comply with UL 467 for grounding and bonding materials and equipment.

PART 2 - PRODUCTS

2.1 MANUFACTURERS

A. Manufacturers: Subject to compliance with requirements, available manufacturers offering products that may be incorporated into the Work include, but are not limited to, the following:

1. Burndy; Part of Hubbell Electrical Systems.
2. Dossert; AFL Telecommunications LLC.
3. ERICO International Corporation.
4. Fushi Copperweld Inc.
5. Galvan Industries, Inc.; Electrical Products Division, LLC.
6. Harger Lightning and Grounding.
7. ILSCO.
8. O-Z/Gedney; A Brand of the EGS Electrical Group.
9. Robbins Lightning, Inc.
10. Siemens Power Transmission & Distribution, Inc.

2.2 SYSTEM DESCRIPTION

A. Electrical Components, Devices, and Accessories: Listed and labeled as defined in NFPA 70, by a qualified testing agency, and marked for intended location and application.

B. Comply with UL 467 for grounding and bonding materials and equipment.

2.3 CONDUCTORS

A. Insulated Conductors: Copper or tinned-copper wire or cable insulated for 600 V unless otherwise required by applicable Code or authorities having jurisdiction.

B. Bare Copper Conductors:

1. Stranded Conductors: ASTM B 8.
2. Tinned Conductors: ASTM B 33.
3. Bonding Cable: 28 kcmil, 14 strands of No. 17 AWG conductor, 1/4 inch (6 mm) in diameter.
4. Bonding Conductor: No. 4 or No. 6 stranded conductor.
5. Bonding Jumper: Copper tape, braided conductors terminated with copper ferrules; 1-5/8 inches (41 mm) wide and 1/16 inch (1.6 mm) thick.
6. Tinned Bonding Jumper: Tinned-copper tape, braided conductors terminated with copper ferrules; 1-5/8 inches (41 mm) wide and 1/16 inch (1.6 mm) thick.

2.4 CONNECTORS

A. Listed and labeled by an NRTL acceptable to authorities having jurisdiction for applications in which used and for specific types, sizes, and combinations of conductors and other items connected.

B. Bolted Connectors for Conductors: Copper or copper alloy.

2.5 GROUNDING ELECTRODES

A. A steel copper clad grounding rod, not less than 5/8 in. (15.9mm) in diameter and 8 feet (2438mm) long.

PART 3 - EXECUTION

3.1 APPLICATIONS

A. Conductors: Install stranded conductors unless otherwise indicated.

B. Underground Grounding Conductors: Install bare copper conductor.

1. Bury at least 24 inches (600 mm) below grade.
2. Duct-Bank Grounding Conductor: Bury 12 inches (300 mm) above duct bank when indicated as part

of duct-bank installation.

C. Conductor Terminations and Connections:

1. Equipment Grounding Conductor Terminations: Bolted connectors.
2. Underground Connections: Hi compression connectors except as otherwise indicated.
3. Connections to Ground Rods: Bolted connectors.

3.2 GROUNDING UNDERGROUND DISTRIBUTION SYSTEM COMPONENTS

A. Comply with IEEE C2 grounding requirements.

B. Grounding Handholes: Install a driven ground rod through handhole floor, close to wall, and set rod depth so 4 inches (100 mm) will extend above floor. Bond with all metallic conduits and lid.

3.3 EQUIPMENT GROUNDING

A. Install insulated equipment grounding conductors with all circuits.

END OF SECTION

***Add** the following Section*:

SECTION 16073 – HANGERS AND SUPPORTS FOR ELECTRICAL SYSTEMS

PART 1 – GENERAL

1.1 RELATED DOCUMENTS

A. Drawings and general provisions of the Contract, including General and Supplementary Conditions and Division 01 Specification Sections, apply to this Section.

1.2 SUMMARY

A. This Section includes the following:

1. Hangers and supports for electrical equipment and systems.
2. Construction requirements for concrete bases.

1.3 DEFINITIONS

A. EMT: Electrical metallic tubing.

B. IMC: Intermediate metal conduit.

C. RMC: Rigid metal conduit.

1.4 PERFORMANCE REQUIREMENTS

A. Rated Strength: Adequate in tension, shear, and pullout force to resist maximum loads calculated or imposed for this Project, with a minimum structural safety factor of five times the applied force.

1.5 ACTION SUBMITTALS

A. Product Data: For the following:

1. Steel slotted support systems.

1.6 QUALITY ASSURANCE

A. Welding: Qualify procedures and personnel according to AWS D1.1/D1.1M, "Structural Welding Code - Steel."

B. Comply with NFPA 70.

1.7 COORDINATION

A. Coordinate size and location of concrete bases. Cast anchor-bolt inserts into bases. Concrete, reinforcement, and formwork requirements are specified together with concrete Specifications.

PART 2 - PRODUCTS

2.1 SUPPORT, ANCHORAGE, AND ATTACHMENT COMPONENTS

A. Steel Slotted Support Systems: Comply with MFMA-4, factory-fabricated components for field assembly.

1. Available Manufacturers: Subject to compliance with requirements, manufacturers offering products that may be incorporated into the Work include, but are not limited to, the following:
   a. Allied Tube & Conduit.
   b. Cooper B-Line, Inc.
   c. ERICO International Corporation.
   d. GS Metals Corp.
   e. Thomas & Betts Corporation.
   f. Unistrut; Atkore International.

g. Wesanco, Inc.

2. Metallic Coatings: Hot-dip galvanized after fabrication and applied according to MFMA-4.
3. Channel Dimensions: Selected for applicable load criteria.

B. Raceway and Cable Supports: As described in NECA 1 and NECA 101.

C. Conduit and Cable Support Devices: Steel and malleable-iron clamps, and associated fittings, designed for types and sizes of raceway or cable to be supported.

D. Structural Steel for Fabricated Supports and Restraints: ASTM A 36/A 36M, steel plates, shapes, and bars; black and galvanized.

E. Mounting, Anchoring, and Attachment Components: Items for fastening electrical items or their supports to building surfaces include the following:

1. Powder-Actuated Fasteners: Threaded-steel stud, for use in hardened Portland cement concrete, steel, or wood, with tension, shear, and pullout capacities appropriate for supported loads and building materials where used.
   A. Available Manufacturers: Subject to compliance with requirements, manufacturers offering products that may be incorporated into the Work include, but are not limited to, the following:
      1) Hilti, Inc.
      2) ITW Ramset/Red Head; Illinois Tool Works, Inc.
      3) MKT Fastening, LLC.
      4) Simpson Strong-Tie Co., Inc.
2. Mechanical-Expansion Anchors: Insert-wedge-type, stainless steel, for use in hardened Portland cement concrete with tension, shear, and pullout capacities appropriate for supported loads and building materials in which used.
   A. Available Manufacturers: Subject to compliance with requirements, manufacturers offering products that may be incorporated into the Work include, but are not limited to, the following:
      1) Cooper B-Line, Inc.
      2) Empire Tool and Manufacturing Co., Inc.
      3) Hilti, Inc.
      4) ITW Ramset/Red Head; Illinois Tool Works, Inc.
      5) MKT Fastening, LLC.

3. Concrete Inserts: Steel or malleable-iron, slotted support system units similar to MSS Type 18; complying with MFMA-4 or MSS SP-58.
4. Clamps for Attachment to Steel Structural Elements: MSS SP-58, type suitable for attached structural element.
5. Through Bolts: Structural type, hex head, and high strength. Comply with ASTM A 325.
6. Toggle Bolts: All-steel springhead type.
7. Hanger Rods: Threaded steel.

2.2 FABRICATED METAL EQUIPMENT SUPPORT ASSEMBLIES

A. Description: Welded or bolted, structural-steel shapes, shop or field fabricated to fit dimensions of supported equipment.

PART 3 - EXECUTION

3.1 APPLICATION

A. Comply with NECA 1 and NECA 101 for application of hangers and supports for electrical equipment and systems except if requirements in this Section are stricter.

B. Maximum Support Spacing for Raceway: Space supports for IMC and RMC as required by NFPA 70.

3.2 SUPPORT INSTALLATION

A. Comply with NECA 1 and NECA 101 for installation requirements except as specified in this Article.

B. Strength of Support Assemblies: Where not indicated, select sizes of components so strength will be adequate to carry present and future static loads within specified loading limits. Minimum static design load used for strength determination shall be weight of supported components plus 200 lb (90 kg).

C. Mounting and Anchorage of Surface-Mounted Equipment and Components: Anchor and fasten electrical items and their supports to building structural elements by the following methods unless otherwise indicated by code:

1. To Wood: Fasten with lag screws or through bolts.
2. To New Concrete: Bolt to concrete inserts.

3. To Masonry: Approved toggle-type bolts on hollow masonry units and expansion anchor fasteners on solid masonry units.
4. To Existing Concrete: Expansion anchor fasteners.
5. Instead of expansion anchors, powder-actuated driven threaded studs provided with lock washers and nuts may be used in existing standard- weight concrete 4 inches (100 mm) thick or greater. Do not use for anchorage to lightweight-aggregate concrete or for slabs less than 4 inches (100 mm) thick.
6. To Light Steel: Sheet metal screws.
7. Items Mounted on Hollow Walls and Nonstructural Building Surfaces: Mount cabinets, panelboards, disconnect switches, control enclosures, pull and junction boxes, transformers, and other devices on slotted- channel racks attached to substrate.

D. Drill holes for expansion anchors in concrete at locations and to depths that avoid reinforcing bars.

3.3 INSTALLATION OF FABRICATED METAL SUPPORTS

A. Cut, fit, and place miscellaneous metal supports accurately in location, alignment, and elevation to support and anchor electrical materials and equipment.

B. Field Welding: Comply with AWS D1.1/D1.1M.

3.4 CONCRETE BASES

A. Construct concrete bases of dimensions indicated but not less than 4 inches (100 mm) larger in both directions than supported unit, and so anchors will be a minimum of 10 bolt diameters from edge of the base.

B. Use 3000-psi (20.7-MPa), 28-day compressive-strength concrete.

C. Anchor equipment to concrete base.

1. Place and secure anchorage devices. Use supported equipment manufacturer's setting drawings, templates, diagrams, instructions, and directions furnished with items to be embedded.
2. Install anchor bolts to elevations required for proper attachment to supported equipment.
3. Install anchor bolts according to anchor-bolt manufacturer's written instructions.

3.5 PAINTING

1. Touchup: Clean field welds and abraded areas of shop paint. Paint exposed areas immediately after erecting hangers and supports. Use same materials as used for shop painting. Comply with SSPC-PA 1 requirements for touching up field-painted surfaces.

2. Apply paint by brush or spray to provide minimum dry film thickness of
2.0 mils (0.05 mm).

B. Galvanized Surfaces: Clean welds, bolted connections, and abraded areas and apply galvanizing-repair paint to comply with ASTM A 780.

END OF SECTION

Add *the following Section*:

SECTION 16075 – ELECTRICAL IDENTIFICATION

PART 1 - GENERAL

1.1 RELATED DOCUMENTS

A. Drawings and general provisions of the Contract, including General and Supplementary Conditions and Division 01 Specification Sections, apply to this Section.

1.2 SUMMARY

A. Section Includes:

1. Identification for conductors.
2. Underground-line warning tape.
3. Miscellaneous identification products.

1.3 QUALITY ASSURANCE

A. Comply with ANSI A13.1 and IEEEC2.

B. Comply with NFPA 70.

C. Comply with 29 CFR 1910.144 and 29 CFR 191.145

D. Comply with ANSI Z535.4 for safety signs and labels.

E. Adhesive-attached labeling materials, including label stocks, laminating adhesives, and inks used by label printers, shall comply with UL 969.

PART 2 - PRODUCTS

2.1 CONDUCTOR IDENTIFICATION MATERIALS

A. Color-Coding Conductor Tape: Colored, self-adhesive vinyl tape not less than 3 mils (0.08 mm) thick by 1 to 2 inches (25 to 50 mm) wide.

B. Self-Adhesive, Self-Laminating Polyester Labels: Preprinted, 3-mil-(0.08-mm-) thick flexible label with acrylic pressure-sensitive adhesive that provides a clear, weather- and chemical-resistant, self-laminating, protective shield over the legend. Labels sized to fit the conductor diameter such that the clear shield overlaps the entire printed legend.

C. Marker Tapes: Vinyl or vinyl-cloth, self-adhesive wraparound type, with circuit identification legend machine printed by thermal transfer or equivalent process.

D. Write-On Tags: Polyester tag, 0.015 inch (0.38 mm) thick, with corrosion- resistant grommet and cable tie for attachment to conductor or cable.

E. Labels for Tags: Self-adhesive label, machine-printed with permanent, waterproof, black ink recommended by printer manufacturer, sized for attachment to tag.

2.2 UNDERGROUND-LINE WARNING TAPE

A. Tape

1. Recommended by manufacturer for the method of installation and
suitable to identify and locate underground electrical utility lines.
2. Printing on tape shall be permanent and shall not be damaged by burial
operations.
Tape material and ink shall be chemically inert, and not subject to
3. degrading when exposed to acids, alkalis, and other destructive substances commonly found in soils.

2.3 CABLE TIES

A. UV-Stabilized Cable Ties: Fungus inert, designed for continuous exposure to exterior sunlight, self-extinguishing, one piece, self-locking, Type 6/6 nylon.

1. Minimum Width: 3/16 inch (5 mm)
2. Tensile Strength at 73 deg F (23 deg C), According to ASTM D 638: 12,000 psi (82.7 MPa).
3. Temperature Range: Minus 40 to plus 185 deg F (Minus 40 to plus 85 deg
4. Color: Black.

PART 3 - EXECUTION

3.1 INSTALLATION

A. Verify identity of each item before installing identification products.

B. Apply identification devices to surfaces that require finish after completing finish work.

C. Self-Adhesive Identification Products: Clean surfaces before application, using materials and methods recommended by manufacturer of identification device.

D. Cable Ties: For attaching tags. Use UV-stabilized nylon.

E. Underground-Line Warning Tape: During backfilling of trenches install continuous underground-line warning tape directly above line at 6 to 8 inches (150 to 200 mm) below finished grade. Use multiple tapes where width of multiple lines installed in a common trench or concrete envelope exceeds 16 inches (400 mm) overall.

3.2 IDENTIFICATION SCHEDULE

A. Power-Circuit Conductor Identification, 600 V or Less: For conductors in vaults, pull and junction boxes, and handholes, use color-coding conductor tape to identify the phase.

B. Color-Coding for Phase and Voltage Level Identification, 600 V or Less: Use colors listed below for ungrounded conductors.

a. Color shall be factory applied or field applied for sizes larger than No. 8 AWG, if authorities having jurisdiction permit.

b. Colors for 208/120-V Circuits:
   1) Phase A: Black.
   2) Phase B: Red.
   3) Phase C: Blue.
c. Colors for 480/120-V Circuits:
   1) Phase A: Brown.
   2) Phase B: Orange.
   3) Phase C: Yellow.

C. Locations of Underground Lines: Identify with underground-line warning tape for lighting wiring.

END OF SECTION

***Add** the following Section*:

SECTION 16120 – CONDUCTORS AND CABLES

PART 1 – GENERAL

1.1 RELATED DOCUMENTS

A. Drawings and general provisions of the Contract, including General and Supplementary Conditions and Division 01 Specification Sections, apply to this Section.

1.2 SUMMARY

A. Section Includes:

1. Building wires and cables rated 600 V and less.
2. Connectors, splices, and terminations rated 600 V and less.

1.3 ACTION SUBMITTALS

A. Product Data: For each type of product.

1.4 INFORMATIONAL SUBMITTALS

A. Field quality-control reports.

PART 2 - PRODUCTS

2.1 CONDUCTORS AND CABLES

A. Manufacturers: Subject to compliance with requirements, available

manufacturers offering products that may be incorporated into the Work include, but are not limited to, the following:

1. Alcan Products Corporation; Alcan Cable Division.
2. Alpha Wire.
3. Belden Inc.
4. Encore Wire Corporation.
5. General Cable Technologies Corporation.
6. Southwire Incorporated.

B. Copper Conductors: Comply with NEMA WC 70/ICEA S-95-658.

C. Conductor Insulation: Comply with NEMA WC 70/ICEA S-95-658 for Type XHHW-2.

2.2 CONNECTORS AND SPLICES

A. Manufacturers: Subject to compliance with requirements, available manufacturers offering products that may be incorporated into the Work include, but are not limited to, the following:

1. AFC Cable Systems, Inc.
2. Gardner Bender.
3. Hubbell Power Systems, Inc.
4. Ideal Industries, Inc.
5. Ilsco; a branch of Bardes Corporation.
6. NSi Industries LLC.
7. O-Z/Gedney; a brand of the EGS Electrical Group.
8. 3M; Electrical Markets Division.
9. Tyco Electronics.

B. Description: Factory-fabricated connectors and splices of size, ampacity rating, material, type, and class for application and service indicated.

2.3 SYSTEM DESCRIPTION

A. Electrical Components, Devices, and Accessories: Listed and labeled as defined in NFPA 70, by a qualified testing agency, and marked for intended location and application.

B. Comply with NFPA 70.

PART 3 – EXECUTION

3.1 CONDUCTOR MATERIAL APPLICATIONS

A. Branch Circuits: Stranded copper.

3.2 CONDUCTOR INSULATION AND MULTICONDUCTOR CABLE APPLICATIONS AND WIRING METHODS

A. Branch Circuits Concealed in Concrete, below Slabs-on-Grade, and Underground: Type XHHW-2, single conductors in raceway.

3.3 INSTALLATION OF CONDUCTORS AND CABLES

A. Complete raceway installation between conductor termination points according to Section 16130 "Raceways and Boxes" prior to pulling conductors and cables.

B. Use manufacturer-approved pulling compound or lubricant where necessary; compound used must not deteriorate conductor or insulation. Do not exceed manufacturer's recommended maximum pulling tensions and sidewall pressure values.

C. Use pulling means, including fish tape, cable, rope, and basket-weave wire/cable grips, that will not damage cables or raceway.

3.4 CONNECTIONS

A. Tighten electrical connectors and terminals according to manufacturer's published torque-tightening values. If manufacturer's torque values are not indicated, use those specified in UL 486A-486B.

B. Make splices, terminations, and taps that are compatible with conductor material.

1. Use oxide inhibitor in each splice, termination, and tap.

C. Wiring at Outlets: Install conductor at each outlet, with at least 12 inches (300 mm) of slack.

3.5 IDENTIFICATION

A. Identify and color-code conductors and cables according to Section 16075 "Electrical Identification."

B. Identify each spare conductor at each end with identity number and location of other end of conductor, and

identify as spare conductor.

END OF SECTION

***Add** the following Section*:

SECTION 16130 – RACEWAYS AND BOXES

PART 1 - GENERAL

1.1 RELATED DOCUMENTS

A. Drawings and general provisions of the Contract, including General and Supplementary Conditions and Division 01 Specification Sections, apply to this Section.

1.2 SUMMARY

A. Section Includes:

1. Metal wireways.
2. Nonmetal wireways.
3. Boxes, enclosures, and cabinets.
4. Handholes and boxes for exterior underground cabling.

1.3 DEFINITIONS

A. GRC: Galvanized rigid steel conduit.

B. IMC: Intermediate metal conduit.

C. RNC: Rigid Nonmetallic Conduit.

PART 2 - PRODUCTS

2.1 METAL CONDUITS, TUBING, AND FITTINGS

A. Manufacturers: Subject to compliance with requirements, available manufacturers offering products that may be incorporated into the Work include, but are not limited to, the following:

1. AFC Cable Systems, Inc.
2. Allied Tube & Conduit.
3. Anamet Electrical, Inc.
4. Electri-Flex Company.
5. O-Z/Gedney.

6. Picoma Industries.
7. Republic Conduit.
8. Robroy Industries.
9. Southwire Company.
10. Thomas & Betts Corporation.
11. Western Tube and Conduit Corporation.
12. Wheatland Tube Company.

B. Listing and Labeling: Metal conduits, tubing, and fittings shall be listed and labeled as defined in NFPA 70, by a qualified testing agency, and marked for intended location and application.

C. GRC: Comply with ANSI C80.1 and UL 6.

D. IMC: Comply with ANSI C80.6 and UL 1242.

E. RNC: Type EPC-40-PVC, complying with NEMA TC 2 and UL 651.

F. Fittings for Metal Conduit: Comply with NEMA FB 1 and UL 514B.

G. Joint Compound for IMC or GRC: Approved, as defined in NFPA 70, by authorities having jurisdiction for use in conduit assemblies, and compounded for use to lubricate and protect threaded conduit joints from corrosion and to enhance their conductivity.

2.2 NONMETALLIC CONDUITS, TUBING, AND FITTINGS

A. Manufacturers: Subject to compliance with requirements, available manufacturers offering products that may be incorporated into the Work include, but are not limited to, the following:

1. AFC Cable Systems, Inc.
2. Anamet Electrical, Inc.
3. Arnco Corporation.
4. CANTEX Inc.
5. CertainTeed Corporation.
6. Condux International, Inc.
7. Electri-Flex Company.
8. Kraloy.
9. Lamson & Sessions; Carlon Electrical Products.
10. Niedax-Kleinhuis USA, Inc.
11. RACO; Hubbell.
12. Thomas & Betts Corporation.

B. Listing and Labeling: Nonmetallic conduits, tubing, and fittings shall be listed and labeled as defined in NFPA 70, by a qualified testing agency, and marked for intended location and application.

C. RNC: Type EPC-40-PVC, complying with NEMA TC 2 and UL 651 unless otherwise indicated.

D. Fittings for RNC: Comply with NEMA TC 3; match to conduit and material.

E. Solvent cements and adhesive primers shall have a VOC content of 510 and 550 g/L or less, respectively, when calculated according to 40 CFR 59, Subpart D (EPA Method 24).

2.3 BOXES, ENCLOSURES, AND CABINETS

A. Manufacturers: Subject to compliance with requirements, available manufacturers offering products that may be incorporated into the Work include, but are not limited to, the following:

1. Adalet.
2. Cooper Technologies Company; Cooper Crouse-Hinds.
3. EGS/Appleton Electric.
4. Erickson Electrical Equipment Company.
5. FSR Inc.
6. Hoffman.
7. Hubbell Incorporated.
8. Kraloy.
9. Milbank Manufacturing Co.
10. Mono-Systems, Inc.
11. O-Z/Gedney.
12. RACO; Hubbell.
13. Robroy Industries.
14. Spring City Electrical Manufacturing Company.
15. Stahlin Non-Metallic Enclosures.
16. Thomas & Betts Corporation.
17. Wiremold / Legrand.

B. General Requirements for Boxes, Enclosures, and Cabinets: Boxes, enclosures, and cabinets installed in wet locations shall be listed for use in wet locations.

C. Cast-Metal Outlet and Device Boxes: Comply with NEMA FB 1, aluminum, Type FD, with gasketed cover.

D. Device Box Dimensions: 4 inches square by 2-1/8 inches deep (100 mm square by 60 mm deep).

2.4 HANDHOLES AND BOXES FOR EXTERIOR UNDERGROUND

WIRING

A. General Requirements for Handholes and Boxes:

1. Boxes and handholes for use in underground systems shall be designed and identified as defined in NFPA 70, for intended location and application.
2. Boxes installed in wet areas shall be listed and labeled as defined in NFPA 70, by a qualified testing agency, and marked for intended location and application.

B. Polymer-Concrete Handholes and Boxes: Molded of sand and aggregate, bound together with polymer resin, and reinforced with steel, fiberglass, or a combination of the two.

1. Manufacturers: Subject to compliance with requirements, available manufacturers offering products that may be incorporated into the Work include, but are not limited to, the following:
   a. Armorcast Products Company.
   b. Carson Industries LLC.
   c. NewBasis.
   d. Oldcastle Precast, Inc.
   e. Quazite: Hubbell Power System, Inc.
   f. Synertech Moulded Products.
2. Standard: Comply with SCTE 77.
3. Configuration: Designed for flush burial with open bottom unless otherwise indicated.
4. Cover: Weatherproof, cast steel, secured by tamper-resistant locking devices and having structural load rating consistent with enclosure and handhole location.
5. Cover Finish: Nonskid finish shall have a minimum coefficient of friction of 0.50.
6. Cover Legend: Molded lettering, "LIGHTING.".
7. Conduit Entrance Provisions: Conduit-terminating fittings shall mate with entering ducts for secure, fixed installation in enclosure wall.

2.5 SOURCE QUALITY CONTROL FOR UNDERGROUND ENCLOSURES

A. Handhole and Pull-Box Prototype Test: Test prototypes of handholes and boxes for compliance with SCTE 77. Strength tests shall be for specified tier ratings of products supplied.

1. Tests of materials shall be performed by an independent testing agency.

2. Strength tests of complete boxes and covers shall be by either an independent testing agency or manufacturer. A qualified registered professional engineer shall certify tests by manufacturer.
3. Testing machine pressure gages shall have current calibration certification complying with ISO 9000 and ISO 10012 and traceable to NIST standards.

PART 3 – EXECUTION

3.1 RACEWAY APPLICATION

A. Outdoors: Apply raceway products as specified below unless otherwise indicated:

1. Exposed Conduit: GRC or IMC.
2. Underground Conduit: RNC, Type EPC-40-PVC, direct buried.

B. Minimum Raceway Size: 3/4-inch (21-mm) trade size.

C. Raceway Fittings: Compatible with raceways and suitable for use and location.

1. Rigid and Intermediate Steel Conduit: Use threaded rigid steel conduit fittings unless otherwise indicated. Comply with NEMA FB 2.10.

3.2 INSTALLATION

A. Comply with NECA 1 and NECA 101 for installation requirements except where requirements on Drawings or in this article are stricter. Comply with NFPA 70 limitations for types of raceways allowed in specific occupancies and number of floors.

B. Complete raceway installation before starting conductor installation.

C. Comply with requirements in Section 16073 "Hangers and Supports for Electrical Systems" for hangers and supports.

D. Arrange stub-ups so curved portions of bends are not visible above finished slab.

E. Install no more than the equivalent of three 90-degree bends in any conduit run for which fewer bends are allowed. Support within 12 inches (300 mm) of changes in direction.

F. Support conduit within 12 inches (300 mm) of enclosures to which attached.

G. Threaded Conduit Joints, Exposed to Wet, Damp, Corrosive, or Outdoor Conditions: Apply listed compound to threads of raceway and fittings before making up joints. Follow compound manufacturer's written instructions.

H. Terminate threaded conduits into threaded hubs or with locknuts on inside and outside of boxes or cabinets. Install bushings on conduits up to 1-1/4-inch (35mm) trade size and insulated throat metal bushings on 1-1/2-inch (41-mm) trade size and larger conduits terminated with locknuts. Install insulated throat metal grounding bushings on service conduits.

I. Install raceways square to the enclosure and terminate at enclosures with locknuts. Install locknuts hand tight plus 1/4 turn more.

J. Do not rely on locknuts to penetrate nonconductive coatings on enclosures. Remove coatings in the locknut area prior to assembling conduit to enclosure to assure a continuous ground path.

K. Cut conduit perpendicular to the length. For conduits 2-inch (53-mm) trade size and larger, use roll cutter or a guide to make cut straight and perpendicular to the length.

L. Install pull wires in empty raceways. Use polypropylene or monofilament plastic line with not less than 200-lb (90-kg) tensile strength. Leave at least 12 inches (300 mm) of slack at each end of pull wire. Cap underground raceways designated as spare above grade alongside raceways in use.

M. Comply with manufacturer's written instructions for solvent welding RNC and fittings.

N. Fasten junction and pull boxes to or support from building structure. Do not support boxes by conduits.

3.3 INSTALLATION OF UNDERGROUND CONDUIT

A. Direct-Buried Conduit:
   1. Excavate trench bottom to provide firm and uniform support for conduit. Prepare trench bottom as specified in Section 02203 "Trenching" for pipe less than 6 inches (150 mm) in nominal diameter.
   2. Install backfill as specified in 02203 "Trenching."

3. After installing conduit, backfill and compact. Start at tie-in point, and work toward end of conduit run, leaving conduit at end of run free to move with expansion and contraction as temperature changes during this process. Firmly hand tamp backfill around conduit to provide maximum supporting strength. After placing controlled backfill to within 12 inches (300 mm) of finished grade, make final conduit connection at end of run and complete backfilling with normal compaction as specified in 02203 "Trenching."
4. Install manufactured rigid steel conduit elbows for stub-ups at poles and equipment and at building entrances through floor.
    a. Couple steel conduits to ducts with adapters designed for this purpose.
    b. For stub-ups at equipment mounted on outdoor concrete bases and where conduits penetrate building foundations, extend steel conduit horizontally a minimum of 60 inches (1500 mm) from edge of foundation or equipment base. Install insulated grounding bushings on terminations at equipment.
    c. Underground Warning Tape: Comply with requirements in Section 16075 "Electrical Identification."

3.4 INSTALLATION OF UNDERGROUND HANDHOLES AND BOXES

A. Install handholes and boxes level and plumb and with orientation and depth coordinated with connecting conduits to minimize bends and deflections required for proper entrances.

B. Unless otherwise indicated, support units on a level bed of crushed stone or gravel, graded from 1/2-inch (12.5-mm) sieve to No. 4 (4.75-mm) sieve and compacted to same density as adjacent undisturbed earth.

C. Elevation: In paved areas, set so cover surface will be flush with finished grade. Set covers of other enclosures 1 inch (25 mm) above finished grade.

D. Field-cut openings for conduits according to enclosure manufacturer's written instructions. Cut wall of enclosure with a tool designed for material to be cut. Size holes for terminating fittings to be used, and seal around penetrations after fittings are installed.

3.5 PROTECTION

A. Protect coatings, finishes, and cabinets from damage and

deterioration.

1. Repair damage to galvanized finishes with zinc-rich paint recommended by manufacturer.

END OF SECTION

***Add** the following Section*:

SECTION 16476 – DISCONNECT SWITCHES AND CIRCUIT BREAKERS

PART 1 – GENERAL

1.1 RELATED DOCUMENTS

A. Drawings and general provisions of the Contract, including General and Supplementary Conditions and Division 1 Specification Sections, apply to this Section.

1.2 SUMMARY

A. This Section includes individually mounted switches and circuit breakers used for the following:

1. Service disconnect switches.
2. Feeder and equipment disconnect switches.
3. Feeder branch-circuit protection.

B. Related Sections: The following Sections contain requirements that relate to this Section:

1. Division 16 Section 16140 - Wiring Devices for attachment plugs andreceptacles, and snap switches used for disconnect switches.

1.3 SUBMITTALS

A. General: Submit each item in this Article according to the Conditions of the Contract andDivision 1 Specification Sections.

B. Product Data for disconnect switches, circuit breakers, and accessories specified in this Section.

C. Maintenance data for tripping devices to include in the operation and maintenance manual specified in Division 1.

1.4 QUALITY ASSURANCE

A. Source Limitations: Obtain disconnect switches and circuit breakers from one source andby a single manufacturer.

B. Comply with NFPA 70 for components and installation.

C. Listing and Labeling: Provide disconnect switches and circuit breakers specified in this Section that are listed and labeled.

1. The Terms "Listed" and "Labeled": As defined in the National Electrical Code,Article 100.
2. Listing and Labeling Agency Qualifications: A "Nationally Recognized TestingLaboratory" (NRTL) as defined in OSHA Regulation 1910.7.

PART 2 – PRODUCTS

2.1 MANUFACTURERS

A. Available Manufacturers: Subject to compliance with requirements, manufacturers offering disconnect switches and circuit breakers that may be incorporated into the Work include, but are not limited to, the following:

1. Molded-Case Circuit Breakers:
   a. American Circuit Breaker Corp.
   b. Eaton Corp.; Cutler-Hammer Products.
   c. General Electric Co.; Electrical Distribution and Control Division.
   d. Klockner-Moeller.
   e. Siemens Energy & Automation, Inc.
   f. Square D Co.
   g. Westinghouse Electric Corp.; Distribution & Control Business Unit.

2.2 DISCONNECT SWITCHES

A. Enclosed, Non-fusible Switch: NEMA KS 1, Type HD, with lockable handle.

B. Enclosed, Fusible Switch, 800 A and Smaller: NEMA KS 1, Type HD, clips to accommodate specified fuses, enclosure consistent with environment where located, handle lockable with 2 padlocks, and interlocked with cover in CLOSED position.

C. Enclosure: NEMA KS 1, Type 1, unless otherwise specified or required to meet environmental conditions of installed location.

1. Outdoor Locations: Type 4X.
2. Other Wet or Damp Indoor Locations: Type 4.

2.3 ENCLOSED CIRCUIT BREAKERS

A. Enclosed, Molded-Case Circuit Breaker: NEMA AB 1, with lockable handle.

B. Characteristics: Frame size, trip rating, number of poles, and auxiliary devices asindicated and interrupting rating to meet available fault current.

C. Application Listing: Appropriate for application, including switching fluorescent lightingloads or heating, air-conditioning, and refrigerating equipment.

D. Circuit Breakers, 200 A and Larger: Trip units interchangeable within frame size.

E. Circuit Breakers, 400 A and Larger: Field-adjustable, short-time and continuous-currentsettings.

F. Current-Limiting Trips: Where indicated, let-through ratings less than NEMA FU 1,Class RK-5.

G. Current Limiters: Where indicated, integral fuse listed for circuit breaker.

H. Molded-Case Switch: Where indicated, molded-case circuit breaker without trip units.

I. Lugs: Mechanical lugs and power-distribution connectors for number, size, and materialof conductors indicated.

J. Shunt Trip: Where indicated.

K. Accessories: As indicated.

L. Enclosure: NEMA AB 1, Type 1, unless otherwise specified or required to meetenvironmental conditions of installed location.

1. Outdoor Locations: Type 4X.
2. Other Wet or Damp Indoor Locations: Type 4.

PART 3 – EXECUTION

3.1 INSTALLATION

A. Install disconnect switches and circuit breakers in locations as indicated, according tomanufacturer's written instructions.

B. Install disconnect switches and circuit breakers level and plumb.

C. Install wiring between disconnect switches, circuit breakers, control, and indicationdevices.

D. Connect disconnect switches and circuit breakers and components to wiring system andto ground as indicated and instructed by manufacturer.

1. Tighten electrical connectors and terminals according to manufacturer's published torque-tightening values. Where manufacturer's torque values are not indicated, use those specified in UL 486A and UL 486B.

E. Identify each disconnect switch and circuit breaker according to requirements specified inDivision 16 Section 16050 - Basic Electrical Materials and Methods.

3.2 FIELD QUALITY CONTROL

A. Testing: After installing disconnect switches and circuit breakers and after electrical circuitry has been energized, demonstrate product capability and compliance with requirements.

1. Procedures: Perform each visual and mechanical inspection and electrical test stated in NETA ATS, Section 7.5 for disconnect switches and Section 7.6 for molded-case circuit breakers. Certify compliance with test parameters.

B. Correct malfunctioning units on-site, where possible, and retest to demonstratecompliance; otherwise, remove and replace with new units and retest.

3.3 ADJUSTING

A. Set field-adjustable disconnect switches and circuit-breaker trip ranges as indicated.

3.4 CLEANING

A. After completing system installation, including outlet fittings and devices, inspect exposed finish. Remove burrs, dirt, and construction

debris and repair damaged finish including chips, scratches, and abrasions.

END OF SECTION

***Add** the following Section*:

SECTION 16521 – EXTERIOR LIGHTING

PART 1 - GENERAL

1.3 RELATED DOCUMENTS

A. Drawings and general provisions of the Contract, including General and Supplementary Conditions and Division 01 Specification Sections, apply to this Section.

1.4 SUMMARY

A. Section Includes:

1. Exterior luminaires with light engines and drivers.
2. Poles and accessories.

1.5 DEFINITIONS

A. CCT: Correlated color temperature.

B. CRI: Color-rendering index.

C. LER: Luminaire efficacy rating.

D. Luminaire: Complete lighting fixture, including ballast housing if provided.

E. Pole: Luminaire support structure, including tower used for large area illumination.

F. Standard: Same definition as "Pole" above.

1.6 STRUCTURAL ANALYSIS CRITERIA FOR POLE SELECTION

A. Dead Load: Weight of luminaire and its horizontal and vertical supports, lowering devices, and supporting structure, applied as stated in AASHTO LTS-4- M.

B. Live Load: Single load of 500 lbf (2224 N), distributed as stated in AASHTO LTS-4-M.

C. Ice Load: Load of 3 lbf/sq. ft. (145 Pa), applied as stated in AASHTO LTS-4-M Ice Load Map.

D. Wind Load: Pressure of wind on pole and luminaire and banners and banner arms, calculated and applied as stated in AASHTO LTS-4-M.

1. Basic wind speed for calculating wind load for poles 50 feet (15 m) high or less is 100 mph (45 m/s).

a. Wind Importance Factor: 1.0.
b. Minimum Design Life: 25 years.
c. Velocity Conversion Factors: 1.0.

1.7 ACTION SUBMITTALS

A. Product Data: For each luminaire, pole, and support component, arranged in order of lighting unit designation. Include data on features, accessories, finishes, and the following:

1. Physical description of luminaire, including materials, dimensions, effective projected area, and verification of indicated parameters.
2. Details of attaching luminaires and accessories.
3. Details of installation and construction.
4. Luminaire materials.
5. Photometric data based on laboratory tests of each luminaire type, complete with indicated light engines, drivers, and accessories.
6. Manufacturer Certified Data: Photometric data shall be certified by manufacturer's laboratory with a current accreditation under the National Voluntary Laboratory Accreditation Program for Energy Efficient Lighting Products.
7. Drivers, including energy-efficiency data.
8. Light engines, including life, output, CCT, CRI, lumens, and energy- efficiency data.
9. Materials, dimensions, and finishes of poles.
10. Means of attaching luminaires to supports, and indication that attachment is suitable for components involved.
11. Anchor bolts for poles.
12. Manufactured pole foundations.

B. Shop Drawings: Include plans, elevations, sections, details, and attachments to other work.

1. Detail equipment assemblies and indicate dimensions, weights, loads, required clearances, method of field assembly, components, and location and size of each field connection.
2. Anchor-bolt templates keyed to specific poles and certified by manufacturer.

1.8 INFORMATIONAL SUBMITTALS

A. Field quality-control reports.

B. Warranty: Sample of special warranty.

1.9 QUALITY ASSURANCE

A. Luminaire Photometric Data Testing Laboratory Qualifications: Provided by manufacturers' laboratories that are accredited under the National Volunteer Laboratory Accreditation Program for Energy Efficient Lighting Products.

B. Electrical Components, Devices, and Accessories: Listed and labeled as defined in NFPA 70, by a qualified testing agency, and marked for intended location and application.

C. Comply with IEEE C2, "National Electrical Safety Code."

D. Comply with NFPA 70.

1.10 DELIVERY, STORAGE, AND HANDLING

A. Store poles on decay-resistant-treated skids at least 12 inches (300 mm) above grade and vegetation. Support poles to prevent distortion and arrange to provide free air circulation.

B. Retain factory-applied pole wrappings on metal poles until right before pole installation. For poles with nonmetallic finishes, handle with web fabric straps.

1.11 WARRANTY

A. Special Warranty: Manufacturer's standard form in which manufacturer agrees to repair or replace products that fail in materials or workmanship; that corrode; or that fade, stain, perforate, erode, or chalk due to effects of weather or solar radiation within specified warranty period. Manufacturer may exclude lightning damage, hail

damage, vandalism, abuse, or unauthorized repairs or alterations from special warranty coverage.

1. Warranty Period for Luminaires: All mechanical components (other than LED drivers) and LED components in the product as well as the fixture housing will be free of defects in material and workmanship for a period of ten (10) years from the date of original purchase.
2. All LED drivers in the Product will be free of defects in material and workmanship for a period equal to the shorter of ten (10) years from the date of original purchase, or fifty thousand (50,000) hours of operation.
3. Warranty Period for Poles: Repair or replace lighting poles and standards that fail in finish, materials, and workmanship within manufacturer's standard warranty period, but not less than three years from date of Substantial Completion.

1.12 EXTRA MATERIALS

A. Furnish extra materials described below that match products installed and that are packaged with protective covering for storage and identified with labels describing contents.

1. Lamps: Provide one spare luminaire for each type installed.
2. Glass and Plastic Lenses, Covers, and Other Optical Parts: Furnish at least 1 for each type and rating installed.
3. Ballasts/Drivers: Provide at least 1 for each type and rating installed.
4. Reflectors, Glare Shields, Globes and Guards: Furnish at least 1 for each type and rating installed.

PART 2 – PRODUCTS

2.1 MANUFACTURERS

A. Products: Subject to compliance with requirements, basis of design is Cree, RSW series.

2.2 GENERAL REQUIREMENTS FOR LUMINAIRES

A. Luminaires shall comply with UL 1598 and be listed and labeled for installation in wet locations by an NRTL acceptable to authorities having jurisdiction.

1. LER Tests Fixtures: Where LER is specified, test according to NEMA LE 5 and NEMA LE 5A as applicable.

B. Lateral Light Distribution Patterns: Comply with IESNA RP-8 for parameters of lateral light distribution patterns indicated for luminaires.

C. Metal Parts: Free of burrs and sharp corners and edges.

D. Housings: Rigidly formed, weather- and light-tight enclosures that will not warp, sag, or deform in use. Provide filter/breather for enclosed luminaires.

E. Doors, Frames, and Other Internal Access: Smooth operating, free of light leakage under operating conditions, and designed to permit servicing without use of tools. Designed to prevent doors, frames, lenses, diffusers, and other components from falling accidentally during servicing and when secured in operating position. Doors shall be removable for cleaning or replacing lenses.

F. Exposed Hardware Material: Stainless steel.

G. Plastic Parts: High resistance to yellowing and other changes due to aging, exposure to heat, and UV radiation.

H. Lenses and Refractors Gaskets: Use heat- and aging-resistant resilient gaskets to seal and cushion lenses and refractors in luminaire doors.

I. Luminaire Finish: Manufacturer's standard paint applied to factory-assembled and -tested luminaire before shipping. Where indicated, match finish process and color of pole or support materials.

1. Exterior Surfaces: Manufacturer's standard finish for corrosion protection.
   a. Color: As indicated by the specifications in the drawings.

J. Factory-Applied Labels: Comply with UL 1598. Labels shall be located where they will be readily visible to service personnel, but not seen from normal viewing angles when lamps are in place.

2.3 DRIVERS FOR LED'S

A. General Requirements for Electronic Drivers
1. Comply with UL and ANSI C82.11
2. Designed for type and quantity of lamps served.

3. Drivers shall be designed for full light output.
4. Drivers shall operate at 60 Hz.
5. Sound Rating: Class A.
6. Total Harmonic Distortion Rating: Less than 20 percent.
7. Transient Voltage Protection IEEE C62.41.1 and IEEE C62.41.2, Category A or better.
8. BF: 0.90, or higher.
9. Power Factor: 0.95, or higher.

2.4 GENERAL REQUIREMENTS FOR POLES AND SUPPORT COMPONENTS

A. Structural Characteristics: Comply with AASHTO LTS-4-M.

1. Wind-Load Strength of Poles: Adequate at indicated heights above grade without failure, permanent deflection, or whipping in steady winds of speed indicated in "Structural Analysis Criteria for Pole Selection" Article.
2. Strength Analysis: For each pole, multiply the actual equivalent projected area of luminaires and brackets by a factor of 1.1 to obtain the equivalent projected area to be used in pole selection strength analysis.

B. Luminaire Attachment Provisions: Comply with luminaire manufacturers' mounting requirements. Use stainless-steel fasteners and mounting bolts unless otherwise indicated.

C. Mountings, Fasteners, and Appurtenances: Corrosion-resistant items compatible with support components.

1. Materials: Shall not cause galvanic action at contact points.
2. Anchor Bolts, Leveling Nuts, Bolt Caps, and Washers: Hot-dip galvanized after fabrication unless otherwise indicated.
3. Anchor-Bolt Template: Plywood or steel.

D. Handhole: Rectangular-shaped, with minimum clear opening of 2-1/2 by 5 inches (65 by 130 mm), with cover secured by stainless-steel captive screws.

E. Concrete Pole Foundations: Precast, with anchor bolts to match pole-base flange.

2.5 STEEL POLES

A. Poles: Comply with ASTM A 500, Grade B, carbon steel with a minimum yield of 42 ksi (290 MPa); one-piece construction up to 40

feet (12 m) in height with access handhole in pole wall.

1. Shape: Per Drawings.
2. Mounting Provisions: Butt flange for bolted mounting on foundation or breakaway support.

B. Steel Mast Arms: Per Drawings. Material and finish same as pole.

C. Grounding and Bonding: Grounding provision is provided at handhole, complying with requirements in Section 16060 "Grounding and Bonding," listed for attaching grounding and bonding conductors of type and size listed in that Section, and accessible through handhole.

D. Cable Support Grip: Wire-mesh type with rotating attachment eye, sized for diameter of cable and rated for a minimum load equal to weight of supported cable times a 5.0 safety factor.

E. Factory-Painted Finish: Comply with NAAMM's "Metal Finishes Manual for Architectural and Metal Products" for recommendations for applying and designating finishes.

1. Interior Surfaces of Pole: One coat of bituminous paint, or otherwise treat for equal corrosion protection.
2. Exterior Surfaces: Per manufacturer's standard for corrosion protection.
   a. Color: As indicated by the specifications in the drawings.

PART 3 – EXECUTION

3.1 LUMINAIRE INSTALLATION

A. Fasten luminaire to indicated structural supports.

3.2 POLE INSTALLATION

A. Alignment: Align pole foundations and poles for optimum directional alignment of luminaires and their mounting provisions on the pole.

B. Clearances: Maintain the following minimum horizontal distances of poles from surface and underground features unless otherwise indicated on Drawings:

1. Fire Hydrants and Storm Drainage Piping: 60 inches (1520 mm).

C. Concrete Pole Foundations: Anchor bolts in precast arranged according to anchor-bolt templates furnished by pole manufacturer. Concrete materials, installation, and finishing requirements are specified in Section 03302 " Concrete Structures.".

D. Foundation-Mounted Poles: Mount pole with leveling nuts, and tighten top nuts to torque level recommended by pole manufacturer.

1. Use anchor bolts and nuts defined for the application and approved by manufacturer.

E. Raise and set poles using web fabric slings (not chain or cable).

3.3 CORROSION PREVENTION

A. Steel Conduits: Comply with Section 16130 "Raceways and Boxes." In concrete foundations, wrap conduit with 0.010-inch- (0.254-mm-) thick, pipe-wrapping plastic tape applied with a 50 percent overlap.

3.4 GROUNDING

A. Ground metal poles and support structures according to Section 16060 "Grounding and Bonding."

1. Install grounding conductor pigtail in the base for connecting luminaire to grounding system.

3.5 FIELD QUALITY CONTROL

A. Inspect each installed fixture for damage. Replace damaged fixtures and components.

B. Illumination Observations: Verify normal operation of lighting units after installing luminaires and energizing circuits with normal power source.

END OF SECTION

***Add** the following Section*:

SECTION 16900 – INSTRUMENTATION AND CONTROLS

PART 1 – GENERAL

1.1 THE REQUIREMENT

A. Commissioning of the Sanitary Lift Station control panel shall be performed by the lift station manufacturer's representative.

B. The Contractor shall coordinate with the lift station manufacturer to ensure the system is complete and operational.

1.2 ACTION SUBMITTALS

A. Product Data: For each type and rating of equipment indicated.

1. Include dimensions.

2. Include rated capacities, operating characteristics, electrical characteristics, and furnished specialties and accessories.

B. Shop Drawings: For each article of equipment indicated.

1. Include mounting and attachment details.

2. Include details of equipment assemblies. Indicate dimensions, weights, loads, required clearances, method of field assembly, components, and location and size of each field connection.

3. Include diagrams for power, signal, and control wiring.

1.3 INFORMATIONAL SUBMITTALS

A. Source quality-control reports.

B. Sample Warranty: For special warranty.

1.4 CLOSEOUT SUBMITTALS

A. Operation and Maintenance Data: For equipment to include in emergency, operation, and maintenance manuals.

1. Include the following:

a. Manufacturer's written instructions for setting field-adjustable components.

b. Manufacturer's written instructions for testing, adjusting, and reprogramming microprocessor control modules.

c. Shop drawings with “as-installed” characteristics incorporated.

1.5 MAINTENANCE MATERIAL SUBMITTALS

A. Furnish extra materials that match products installed and that are packaged with protective covering for storage and identified with labels describing contents.

1. Control Power Fuses: Equal to 10 percent of quantity installed for each size and type, but no fewer than five of each size and type.

PART 2 – PRODUCTS

2.1 MANUFACTURERS

A. Provide the control equipment by the manufacturers shown on the Drawings and specified in this section.

2.2 CONTROL PANELS

A. Sanitary Lift Station Control Panel:

a. General: A duplex pump control panel shall be provided per to the Electrical Drawings and shall have as a minimum, a main disconnect switch, motor starters, alarm beacon, digital level control system with submersible level sensor and available ethernet connection and mechanical floats. Incoming power is Single Phase, 240VAC.

b. Accessories:

i. Leverless Limit Switches:

1. Leverless limit switch shall be installed on each discharge check valve to monitor “No Flow” situations that could damage the pumps.

2. Mechanical limit switches or heat sensing devises placed on the pumps to determine “No Flow” are not acceptable alternates to Leverless Limit Switches

ii. Outlets:

1. One GFI outlet will be provided for the safety of the operator or maintenance personnel.

2. One 120V 10amp dedicated outlet shall be provided on the side of the control panel to provide power to the

Communication Panel.

iii. Blower:

1. The station shall have a 1/20 HP, 115 Volt thermostatically operated blower with a capacity of 265 C.F.M. to exchange the air inside the chamber. The blower will exhaust the hot air out of the chamber through a stainless steel louvered vent and pull fresh air into the chamber through another vent of the same construction and of equal area located opposite the blower. Both openings will be fitted with bug screens and the blowers' intake screened to prevent operator injury.

c. Intrinsically Safe Barriers: Intrinsically safe barriers shall be provided for all control wiring such as level sensor, floats and other low voltage devices.

d. Manufacturer: PumpTech, LLC, or approved equal.

e. Enclosure: Enclosure shall be NEMA 12 / 4, 24"x30"x8".

f. UL Listing: The panel shall be manufactured in the USA by a UL698A registered shop and provided with a UL 698A label for Industrial Control Panels Relating to Hazardous (Classified) Locations. A plastic laminated copy of the wiring diagram shall be attached to the inside of the panel door with waterproof adhesive.

B. Communication Panel:

a. General: A cellular communication control panel shall be provided per the Electrical Drawings.

b. Enclosure: The panel enclosure shall be NEMA 4X.

c. UL Listing: The panel shall be UL 508A listed.

2.3 MOTOR STARTERS

A. All starters shall include

a. Adjustable electronic overload,

b. Minimum short circuit capacity rating of 42kAIC,

c. a Modbus connection to the level controller and level control shall display current per phase, ground fault current, and motor thermal current. The level controller shall serve this data to the web server and SCADA systems,

d. Pad-lockable door handle for locking out each pump individually.

B. Manufacturer: Starters shall be Schneider Electric U-Line with multi-function control module and Modbus interface, or approved equal.

2.3 FLOWMETER:

A. General: A 4" magmeter shall be installed in the discharge line within the enclosure of the station. The magmeter is designed to have short inlet and outlet runs, handle contamination and solids found in common municipal sewage. It will be 150# ANSI flanged with a hard rubber liner and Stainless Steel grounding ring. The flowmeter shall be a Krohne Enviromag 2000, or approved equal.

B. Accessories Krohne IFC 100 remote mount signal converter that will be mounted outside of the main control panel in the station.

2.4 LEVEL CONTROLLER:

A. General: The lift station control system shall include a digital level controller (DLC). The DLC shall, as a minimum, consist of a microprocessor with I/O and a color touch screen operator interface panel. The DLC shall be an integrated system and factory programmed to start, stop and sequence the pumps based on the relationship between the user accessible set points on the interface panel and the analog input from the level sensor.

B. Environmental: The DLC shall be an industrial type controller designed for harsh environments and a standard catalog item of a manufacturer with at least five years experience in manufacturing micrologic level controllers. The DLC shall be rated for a minimum of 0-50 C operating temperature.

C. Mounting: The digital level controller shall be mounted on the control panel door and shall include:

a. 5.7" in, 320 x 240 pixel TFT touch screen

b. 5 key sealed membrane keypad

c. 4.5M application memory

d. 312K data table memory

e. 8GB micro SD card

f. (1) RS232/RS485 serial ports supporting Modbus protocol

g. (1) Ethernet port

h. (2) 4-20ma and 0-10V analog inputs

i. (22) 24VDC digital inputs

j. (12) 5A relay contact outputs rated for up to 230VAC

k. (2) 10KHz high speed inputs.

D. Digital Inputs and Outputs: Inputs shall be provided for each pump to include moisture in motor, motor over-temperature (Only for Submersible Lift Stations), pump starter auxiliary contact to confirm pump operation when called, redundant high and low float switch and HOA Auto position to confirm the pump is available. Outputs shall be provided for each pump run command, out-of-service indicator for each pump, alarm dome light and general fault contact.

E. Program Features:

a. Configuration: The DLC shall have the following minimum configuration capabilities, all accessible by simply enabling them by touching a button in a user friendly setup wizard:

i. Simplex, duplex, triplex or quadraplex operation – system shall automatically adjust all screens and functions for the number of pumps in the system.

ii. Constant speed.

iii. Pump down or pump up mode

iv. 0-10V or 4-20ma level sensor input

v. User scalable level sensor range and units, with offset

vi. Modbus connection to smart starter or electronic overload relay.

b. Monitoring and Set Points: The level controller shall be designed

with screens that will allow user access the following functions and data:

i. Level display – in tenths of a foot

ii. Number of pumps called

iii. Pump status (Running, Stopped, Called, Failed, Out-of-service) for each pump

iv. HOA selector (in controller to allow remote control of the pumps) for each pump

v. Run hour meter for each pump – minimum 100,000.00 hours (hundredths resolution)

vi. Number of starts counter for each pump

vii. Alternation status

viii. Alternation mode selector (Automatic, time clock, or manual)

ix. Lead pump start and stop set point

x. Lag pump start and stop set point

xi. High and low level alarm set point

xii. Restart lockout time delay

xiii. Pump current, each phase, average and imbalance

xiv. Pump voltage, each phase, average and imbalance

xv. Ground fault

xvi. Motor monitor trip reason

F. Alarm Configuration: The DLC shall have alarm configuration screens for each of the following alarm conditions:

a. High level – level sensor

b. Low level – level sensor

c. No Flow

d. MotorSaver fault

e. High level – redundant float switch

f. Low level – redundant float switch

g. Level sensor failure

Each alarm condition shall have touch buttons that enable or disable each of the above alarm conditions individually to:

a. Enable/disable alarm condition

b. Shutdown pumps

c. Manual or Auto reset

d. Turn on the alarm light output

e. Flash the alarm light

f. Turn on the general fault contact

g. Send email and/or text message

h. Adjust time delay

All enabled alarms shall be recorded in the DLC alarm history log and in an alarm handler that provide data regarding time of alarm, active or not, and number of same faults since last time cleared.

G. Communications:

a. Ethernet Port: The DLC shall have an Ether net port that simultaneously provides TCP/IP socket, Modbus IP slave socket, and HTTP socket. Touch screens shall be provided for setting IP address, Gateway address, password, Modbus network ID and email SMTP server configuration.

b. Manufacturer: digital level controller shall be PV600 PUMP Vision as manufactured by California Motor Controls, Inc. or pre-approved equal.

2.5 LEVEL SENSOR

A. The level sensor shall provide continuous non-contact level measurement

of liquids, pastes and slurries. Measurement shall not be affected by changing media, temperature changes, gas blankets or vapors, and reliability shall be provided via multi-echo tracking and small beam angle.

B. The primary automatic pump cycling is to be controlled by an E+H Micropilot FMR60-FDACCDGAB4RGJ+AANF radar level sensor with Bluetooth capabilities or approved equal.

C. Qty, 2) Mechanical floats switches will be provided as a redundant back up to the Submersible Transducer specified above. In the event of a catastrophic failure of the primary level sensor, a high level and low level mechanical float are provided to operate the system until the primary sensor has been restored.

2.6 LIMIT SWITCHES

A. Leverless limit switch shall be installed on each discharge check valve to monitor "No Flow" situations that could damage the pumps.

B. Mechanical limit switches or heat sensing devises placed on the pumps to determine "No Flow" are not acceptable alternates to Leverless Limit Switches

2.7 EXTERNAL ALARM BEACON

A. The pump station shall have a weatherproof, red beacon light mounted atop the stations arch assembly. The cast base can be utilized as a junction box and the polycarbonate double fresnel lens ensures efficient light dispersion. The dimensions of the Alarm Lamp should be at least 7" tall by 6"wide at the base. It will be suitable for 120V power.

PART 3 – EXECUTION

3.1 GENERAL

A. A. General: Examine equipment before installation. Reject equipment that is wet, moisture damaged, or mold damaged.

3.2 PANEL ASSEMBLY

A. Panel Wiring: There shall be no splices within the panel wiring. All wire ends shall be finished with crimped ferrules to prevent strands from splaying.

B. UL Listing: Control panels must be UL Listed.

3.3 WIRE AND CABLE

A. General: Install all wiring as specified in previous Sections of this Division, as required by the manufacturer, and in accordance to NFPA.

B. Peripheral Wiring: All conductors terminated in control panels shall be bundles in paralleled and perpendicular patterns with plastic ties or routed through wire ducts. There shall be no looped wires. All internal panel splices shall be made on terminal blocks.

3.4 INSTRUMENTS

A. Install all instruments as required by the manufacturers.

3.5 TESTING

A. Upon completion of the lift station controls and prior to final acceptance, perform function tests in the presence of the engineer. Notify the engineer 48 hours prior to performing tests. Show that each segment and mode of the specific system operates as specified or shown in the schematic diagrams.

END OF SECTION

END OF SPECIAL PROVISIONS

MISTY LANE RECONSTRUCTION

CBJ PROJECT NO. BE22-217

CITY & BOROUGH OF JUNEAU, ALASKA

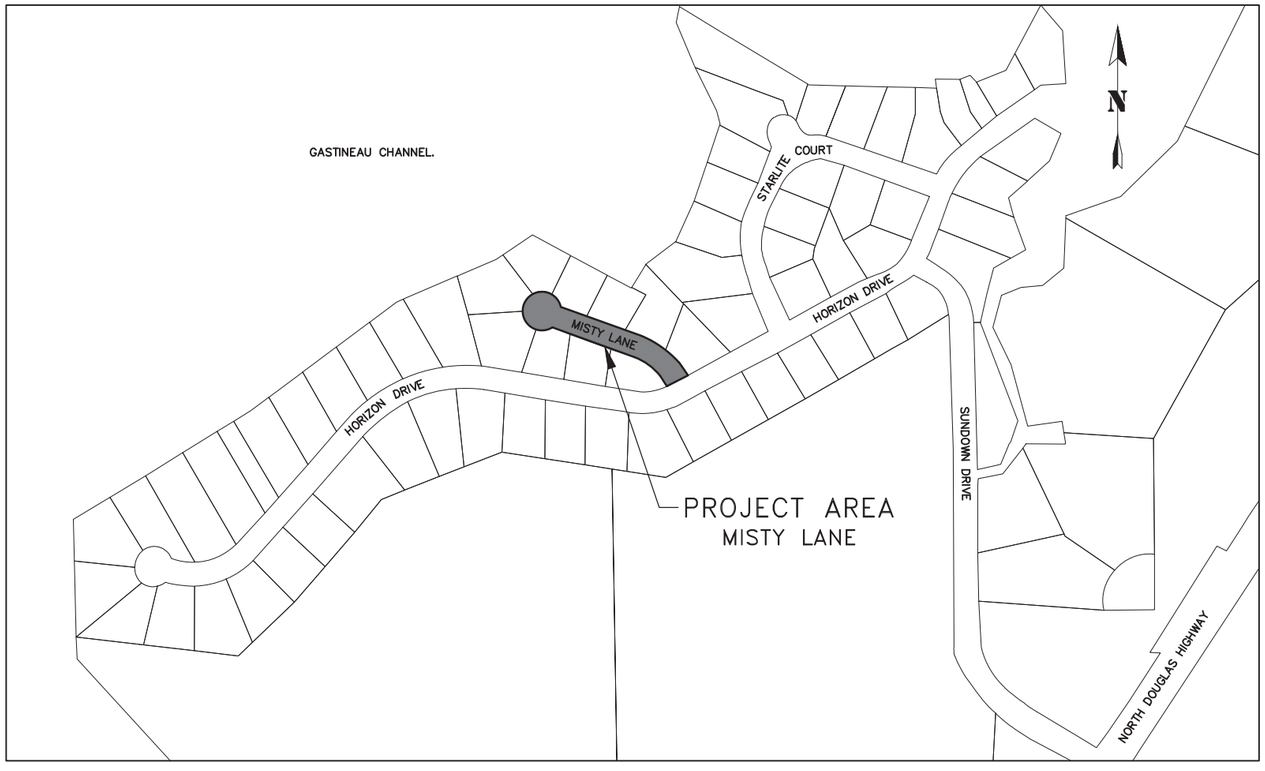

PROJECT LOCATION MAP

NTS

SHEET INDEX	
SHEET NO.	DESCRIPTION
G-01	COVER SHEET
G-02	LEGEND ABBREVIATIONS & GENERAL NOTES
C-01	TYPICAL SECTIONS
C-02 TO C-04	CONSTRUCTION DETAILS
C-05	LIFT STATION DETAILS
C-06	SUMMARY TABLES
C-07	PLAN – BOP TO 12+60
C-08	PLAN – 12+60 TO EOP
C-09	PROFILE – BOP TO EOP
C-10	GRADING – BOP TO 12+60
C-11	GRADING – 12+60 TO EOP
E-01	ELECTRICAL SITE PLAN – EXISTING
E-02	ELECTRICAL SITE PLAN – NEW
E-03	ONE LINE DIAGRAM
E-04	NETWORK SCHEMATIC
E-05	EQUIPMENT RACK
E-06	COMMUNICATION PANEL – LAYOUT
E-07	COMMUNICATION PANEL – CONTROL
E-08	LIGHT POLE DETAIL
E-09	FOOTING AND JUNCTION BOX DETAIL
E-10	TRENCH DETAIL
S-01	SURVEY CONTROL SHEET



VICINITY MAP

NTS

STATE OF ALASKA 49TH
LUCAS M. CHAMBERS
1/31/2022
CE 106593
REGISTERED PROFESSIONAL ENGINEER

RECORD OF REVISIONS			
No.	DATE	DESCRIPTION	BY

proHNS LLC
CERTIFICATE OF AUTHORIZATION #100662

DRAWN BY:	E. ROEMELING
DESIGNED BY:	E. ROEMELING
CHECKED BY:	L. CHAMBERS

1945 ALEX HOLDEN WAY #101
JUNEAU, AK 99801
(907) 780-4004
solutions@proHNS.com
www.proHNS.com

CITY AND BOROUGH OF JUNEAU
ALASKA'S CAPITAL CITY
ENGINEERING & PUBLIC WORKS

MISTY LANE RECONSTRUCTION

BE22-217

COVER SHEET

SHEET NUMBER
G-01
OF
24

January 31, 2022 C:\Users\Ethan Roemeling\Dropbox (proHNS)\Projects\Juneau\CBJ Misty Lane\C3D Misty Lane\Sheets\Misty Ln_TITLE.dwg

LEGEND

DESCRIPTION	EXISTING	REMOVE	PROPOSED
ASPHALT	EDGE OF ASPHALT		HATCHED AREA
EDGE OF GRAVEL			
BOLLARDS			
BUILDING			
CONCRETE			
VALLEY GUTTER			
FENCE			
FIRE HYDRANT			
MONUMENT			
PROPERTY LINE			
SANITARY SEWER CLEANOUT			
SANITARY SEWER PIPE	PIPE SIZE & TYPE		SP-1
SANITARY SEWER FORCE MAIN	FM FM		
SANITARY SEWER MANHOLE	SS-EX-1		
SAWCUT & MTE LIMITS			
SIGN			
STORM DRAIN CATCH BASIN			S-1
STORM DRAIN PIPE	PIPE SIZE & TYPE SD SD	PIPE SIZE & TYPE SD SD SD	P-1 SD SD
STORM DRAIN UNDERDRAIN			UD UD UD
DITCH FLOW LINE	> >		> >
TOP OF BANK			
STORM DRAIN MANHOLE, GRATE			S-1
TREES			
UTILITY POLE WITH LUMINAIRE			
UNDERGROUND ELECTRIC (UGC, UGE, UGP)	UGE UGE		
WATER LINE PIPE	PIPE SIZE & TYPE	PIPE SIZE & TYPE	
WATER VALVE BOX			

ABBREVIATIONS

AC	ASPHALT CONCRETE
ACP	ASBESTOS CEMENT PIPE
BOP	BEGINNING OF PROJECT
BTM	BOTTOM
BVC	BEGIN VERTICAL CURVE
CB	CATCH BASIN
CBJ	CITY & BOROUGH OF JUNEAU
℄	CENTERLINE
CMP	CORRUGATED METAL PIPE
CPP	CORRUGATED POLYETHYENE PIPE
CONC	CONCRETE
CTE	CONNECT TO EXISTING
DIP	DUCTILE IRON PIPE
DIA	DIAMETER
EL	ELEVATION
EOP	END OF PROJECT
EVC	END VERTICAL CURVE
EX	EXISTING
FG	FINISHED GRADE
FM	FORCE MAIN
GV	GATE VALVE
HDPE	HIGH DENSITY POLYETHYLENE
INV	INVERT
LT	LEFT
LVC	LENGTH OF VERTICAL CURVE
MH	MANHOLE
MIN	MINIMUM
MTE	MATCH TO EXISTING
NIC	NOT IN CONTRACT
NO	NUMBER
NTS	NOT TO SCALE
PC	POINT OF CURVATURE
PCC	POINT OF COMPOUND CURVATURE
PRC	POINT OF REVERSE CURVATURE
PSI	POUNDS PER SQUARE INCH
PT	POINT OF TANGENT
PVC	POLYVINYL CHLORIDE PIPE
PVI	POINT OF VERTICAL INTERSECTION
RP	RADIUS POINT
RT	RIGHT
ROW	RIGHT-OF-WAY
SDMH	STORM DRAIN MANHOLE
SSMH	SANITARY SEWER MANHOLE
STA	STATION
STD	STANDARD
TBG	TOP BACK OF GUTTER
TBM	TEMPORARY BENCHMARK
TP	TOP OF PAVEMENT
TYP	TYPICAL
UD	UNDERDRAIN
UGC	UNDERGROUND CABLE
UGE	UNDERGROUND ELECTRIC
UGP	UNDERGROUND PHONE
VPC	VERTICAL POINT OF CURVATURE
VPI	VERTICAL POINT OF INTERSECTION
VPT	VERTICAL POINT OF TANGENCY

GENERAL NOTES

1. THE CITY AND BOROUGH OF JUNEAU STANDARD DETAILS, 4TH EDITION, AUGUST 2001; AND THE STANDARD SPECIFICATIONS FOR CIVIL ENGINEERING PROJECTS AND SUBDIVISION IMPROVEMENTS, DECEMBER 2003, ARE MADE A PART OF THIS CONTRACT, INCLUDING ALL ERRATA AND CURRENT REVISIONS AS APPLICABLE.

2. CALL 586-1333 FOR UNDERGROUND UTILITY LOCATES AND 811 ALASKA DIGLINE FOR UNDERGROUND ACS & GCI LOCATES PRIOR TO ANY EXCAVATION ACTIVITIES. LOCATIONS AND ELEVATION OF EXISTING UNDERGROUND WATER, SEWER, POWER, TELEPHONE AND CABLE TELEVISION SHOWN ON THE PLANS WERE DERIVED FROM CBJ AS-BUILTS AND FIELD LOCATES. THE ACTUAL LOCATION OF UTILITIES MAY VARY FROM THOSE SHOWN. THE CONTRACTOR IS RESPONSIBLE FOR LOCATING, PROTECTING AND MAINTAINING THE UTILITIES THROUGHOUT THE CONSTRUCTION OF THE PROJECT. ANY DAMAGE TO THE UNDERGROUND UTILITIES DURING CONSTRUCTION SHALL BE PAID FOR BY THE CONTRACTOR AND SHALL BE CONSIDERED INCIDENTAL TO THE CONTRACT.

3. THE ESTIMATED TOTAL AREA OF DISTURBANCE RESULTING FROM THESE IMPROVEMENTS IS APPROXIMATELY 0.6 ACRES.

4. THE ALASKA DEPARTMENT OF ENVIRONMENTAL CONSERVATION (DEC) HAS IDENTIFIED ONE CONTAMINATED SITE WITHIN 1,500 FEET OF THE PROJECT LIMITS THAT IS CURRENTLY IN "CLEANUP COMPLETE – INSTITUTIONAL CONTROLS" STATUS. IT IS THE RESPONSIBILITY OF THE CONTRACTOR TO CONSULT DEC AND OBTAIN ALL NECESSARY PERMITS REQUIRED TO PERFORM THE WORK.

5. FINISHED GRADE AND ALIGNMENT ARE SUBJECT TO MINOR REVISIONS BY THE ENGINEER. LOCATION OF PROPOSED WATER, SEWER AND STORM DRAINAGE FACILITIES ARE SUBJECT TO MINOR REVISIONS BY THE ENGINEER.

6. PROPERTY LINE LOCATIONS USED IN THESE PLANS ARE DERIVED FROM RECORD PLATS AND DO NOT REPRESENT BOUNDARY SURVEY.

7. THE CONTRACTOR SHALL PERFORM A CLOSED LEVEL LOOP THROUGH ALL TBM'S TO VERIFY ELEVATIONS PRIOR TO BEGINNING ANY WORK.

8. CONTRACTOR SHALL REFERENCE ALL EXISTING PROPERTY CORNER MONUMENTS (I.E. BRASS CAP MONUMENTS, REBARS, CONCRETE NAILS, CHISELED X'S) PRIOR TO CONSTRUCTION AND REMONUMENT AFTER SURFACING IS REPLACED. EXISTING SURVEY MONUMENTS MAY NOT BE SHOWN ON THE DRAWINGS. ALL WORK SHALL BE DONE BY, OR UNDER THE DIRECTION OF, AN ALASKA REGISTERED LAND SURVEYOR.

9. CONTRACTOR SHALL ENSURE GARBAGE PICKUP, PRIVATE AND BUSINESS DELIVERIES, AND DAILY MAIL SERVICE WILL BE UNINTERRUPTED TO ALL BUSINESS AND RESIDENCES AFFECTED BY THIS PROJECT.

10. THE CONTRACTOR SHALL NOT STORE MATERIALS OR EQUIPMENT, OR OPERATE EQUIPMENT WITH ITS TRACKS OR WHEELS PLACED ON PRIVATE PROPERTY, WITHOUT THE WRITTEN APPROVAL OF THE PROPERTY OWNER.

11. THE CONTRACTOR SHALL NOTIFY CBJ WATER UTILITIES (LONI VANKIRK AT 723-4975) OF PROPOSED WATER SERVICE INTERRUPTION AND SUBMIT THE "WATER SYSTEM SPECIAL USE PERMIT" TO CBJ WATER UTILITIES SUPERINTENDENT FOR APPROVAL AT LEAST 48 HOURS PRIOR TO SHUTDOWN OR FLUSHING OF MAINLINE WATER PIPE. NO WATER SERVICE INTERRUPTION MAY PROCEED UNTIL THIS APPROVAL IS OBTAINED. THE CONTRACTOR SHALL NOT SHUT OFF WATER SUPPLY TO SERVICES FOR MORE THAN 8 HOURS AT ONE TIME.

12. ALL MATERIALS PROPOSED FOR THE WATER SYSTEM THAT COME IN DIRECT CONTACT WITH THE WATER SHALL BE CERTIFIED BY AN ANSI ACCREDITED ORGANIZATION TO CONFORM WITH ANSI/NSF STANDARD 61 OR AN ANSI/NSF STANDARD WITH EQUIVALENT HEALTH REQUIREMENTS.

13. THE MATERIALS USED FOR THIS PROJECT SHALL COMPLY WITH THE 2020 EPA REGULATION ON "USE OF LEAD FREE PIPES, FITTINGS, FIXTURES, SOLDER, AND FLUX FOR DRINKING WATER" INCLUDING NOT MORE THAN 0.2% WHEN USED WITH RESPECT TO SOLDER AND FLUX AND NOT MORE THAN A WEIGHTED AVERAGE OF 0.25% LEAD WHEN USED WITH RESPECT TO THE WETTED SURFACES OF PIPES, PIPE FITTINGS, PLUMBING FITTINGS AND FIXTURES.

14. THE CONTRACTOR SHALL VERIFY LOCATION AND DEPTH OF EXISTING WATER PIPES, INCLUDING ALL SERVICES ALONG THE SANITARY SEWER, STORM DRAIN AND WATER PIPE ALIGNMENTS TO DETERMINE PIPE INSULATION LOCATIONS AND TO ENSURE DAMAGE DOES NOT OCCUR TO THE SERVICE PIPES.

15. ONLY HORIZONTAL ELBOW FITTINGS (BENDS) ARE SHOWN (NOT ALL ARE LABELED) ON DRAWINGS. ADDITIONAL FITTINGS WILL BE REQUIRED FOR VERTICAL DEFLECTIONS NEAR CONNECTIONS TO EXISTING PIPES, AND AT OTHER LOCATIONS REQUIRING GRADE CHANGES TO AVOID CONFLICTS.

16. THE PLAN DRAWINGS DO NOT SHOW ALL PLANTINGS AND OTHER LANDSCAPING THAT WILL BE ENCOUNTERED DURING CONSTRUCTION ACTIVITIES. NO PLANTINGS OR LANDSCAPING ARE TO BE REMOVED OR DAMAGED, UNLESS SHOWN ON THE DRAWINGS OR DIRECTED BY THE ENGINEER.

17. ALL ITEMS DESIGNATED TO BE REMOVED SHALL BE DISPOSED OF OFF-SITE, EXCEPT AS NOTED IN THE CONTRACT DOCUMENTS.

18. ALL ASPHALT PAVEMENT TO BE REMOVED AND DISPOSED OF SHALL BE DELIVERED TO A STOCKPILE AREA AT THE LEMON CREEK CITY PIT AT A LOCATION TO BE DESIGNATED BY THE ENGINEER. CONTACT THE ENGINEER FOR THE EXACT LOCATION OF THE STOCKPILE.

19. ALL OTHER MATERIALS TO BE REMOVED AND DISPOSED OF SHALL BECOME THE PROPERTY OF THE CONTRACTOR, INCLUDING CONCRETE, UNSUITABLE SOILS, WATER PIPE, SEWER PIPE, CULVERT, STORM AND SEWER STRUCTURES, SIGN POSTS, ETC.

20. ALL EXISTING STORM DRAINAGE PIPES, CULVERTS AND STRUCTURES WITHIN THE PROJECT LIMITS SHALL BE REMOVED AND DISPOSED OF IN THEIR ENTIRETY UNLESS OTHERWISE INDICATED IN THE CONTRACT DOCUMENTS. WATER AND SANITARY SEWER PIPE CALLED OUT ON THE DRAWINGS FOR REMOVAL SHALL BE REMOVED AND DISPOSED OF IN THEIR ENTIRETY.

STATE OF ALASKA 49TH — Lucas Chambers — LUCAS M. CHAMBERS — 1/31/2022 — CE 106593 — REGISTERED PROFESSIONAL ENGINEER

RECORD OF REVISIONS

No.	DATE	DESCRIPTION	BY

proHNS LLC
CERTIFICATE OF AUTHORIZATION #100662
1945 ALEX HOLDEN WAY #101
JUNEAU, AK 99801
(907) 780-4004
solutions@proHNS.com
www.proHNS.com

DRAWN BY:	E. ROEMELING
DESIGNED BY:	E. ROEMELING
CHECKED BY:	L. CHAMBERS

CITY AND BOROUGH OF JUNEAU — ALASKA'S CAPITAL CITY
ENGINEERING & PUBLIC WORKS

MISTY LANE RECONSTRUCTION
BE22-217

LEGEND ABBREVIATIONS & GENERAL NOTES

SHEET NUMBER G-02 OF 24

January 31, 2022 C:\Users\Ethan Roemeling\Dropbox (proHNS)\Projects\Juneau\CBJ Misty Lane\C3D Misty Lane\Sheets\Misty Ln_LAG.dwg

PAVING SEQUENCE NOTES

1. LAYDOWN OPERATIONS SHALL BE CONDUCTED IN A MANNER WHICH ENSURES THAT THE MINIMUM TEMPERATURE ALONG THE CENTERLINE EDGE OF THE FIRST PAVED LANE DOES NOT FALL BELOW 200°F BEFORE THE SECOND LANE IS PAVED.
2. THE CONTRACTOR SHALL MONITOR THE TEMPERATURE OF THE CENTERLINE EDGE OF THE FIRST PAVED LANE AND MOVE THE LAYDOWN OPERATIONS TO THE SECOND LANE ALLOWING SUFFICIENT TIME FOR THE PAVEMENT OF THE SECOND LANE TO COVER THE CENTERLINE EDGE OF THE FIRST LANE PRIOR TO COOLING TO LESS THAN 200°F.

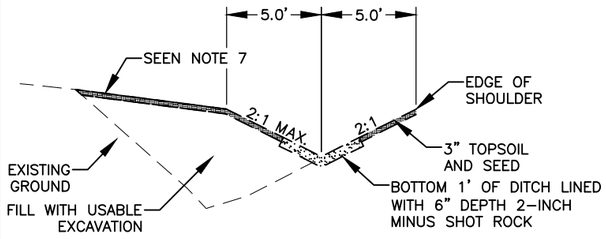

SPECIAL DITCH STA 12+10 TO 12+30
NTS

TRAFFIC CONTROL

1. ALL TRAFFIC TO BE CONTROLLED PER THE REQUIREMENTS OF THE ALASKA TRAFFIC MANUAL, U.S. DEPARTMENT OF TRANSPORTATION "MANUAL ON UNIFORM TRAFFIC CONTROL DEVICES" AND THE ALASKA SUPPLEMENT.
2. ROAD CLOSURES WILL BE PERMITTED ONLY AS APPROVED BY THE ENGINEER.
3. THE CONTRACTOR WILL NOT BE PERMITTED TO OBSTRUCT VEHICULAR TRAFFIC BETWEEN THE HOURS OF 4:30PM AND 8:00AM SEVEN DAYS A WEEK. DURING THIS PERIOD, ONE LANE SHALL BE OPEN TO VEHICULAR TRAFFIC AND WITH A MINIMUM TOTAL WIDTH OF 8 FEET.
4. PROVIDE ACCESS FOR EMERGENCY VEHICLES AT ALL TIMES.
5. A MINIMUM OF ONE LANE (8 FOOT MINIMUM WIDTH) SHALL BE KEPT OPEN TO VEHICULAR AT ALL TIMES, EXCEPT A FIVE (5) MINUTE MAXIMUM STOPPAGE TO VEHICULAR TRAFFIC WILL BE PERMITTED, WITH NO MORE THAN ONE TRAFFIC STOPPAGE PER HOUR. THIS REQUIREMENT DOES NOT APPLY FOR THE DAY OF PAVING.

TYPICAL SECTION NOTES

1. SIDE SLOPES, WIDTHS AND GRADES MAY VARY AT SOME LOCATIONS, SEE GRADING SHEETS FOR ADDITIONAL INFORMATION.
2. SANITARY SEWER AND WATER SERVICES ARE NOT SHOWN ON TYPICAL SECTIONS. SEE PLAN VIEW DRAWINGS FOR LOCATIONS.
3. DEPTH AND HORIZONTAL LOCATION OF EXISTING UNDERGROUND ELECTRICAL, WATER, AND SANITARY SEWER VARIES. SEE PLAN SHEETS FOR APPROXIMATE LOCATIONS.
4. ADDITIONAL EXCAVATION BELOW THE NEATLINE SUBCUT LEVEL MAY BE REQUIRED BY THE ENGINEER IF ORGANIC OR OTHER UNSUITABLE MATERIALS ARE FOUND AT OR NEAR THE PLANNED SUBCUT LEVEL. USABLE MATERIAL FROM EXCAVATION SHALL BE USED TO BACKFILL THE ADDITIONAL AREAS OF EXCAVATION. BACKFILLING WITH USABLE MATERIAL FROM EXCAVATION WILL BE CONSIDERED INCIDENTAL TO OTHER WORK.
5. THE 2-INCH MINUS SHOT ROCK W/BASE COURSE LAYER SHALL BE 7.5" TO 8.5" OF 2-INCH MINUS SHOT ROCK WITH 1" TO 2" TOP LAYER OF BASE COURSE, GRADING D-1 FOR A TOTAL THICKNESS OF 9.5". THE 2-INCH MINUS SHOT ROCK SHALL BE COMPACTED WITH VIBRATORY EQUIPMENT PRIOR TO PLACING THE BASE COURSE GRADING D-1.
6. DRIVEWAYS DISTURBED DURING CONSTRUCTION SHALL BE RECONSTRUCTED TO EQUAL OR BETTER CONDITION WITH SUBGRADE REPLACED IN LAYERS TO MATCH THOSE REMOVED, EXCEPT:
   A. PAVED DRIVEWAYS SHALL BE SUBCUT TO 12" BELOW FINISH GRADE AND REPLACED WITH 9.5" OF 2-INCH MINUS SHOT ROCK WITH BASE COURSE, AND 2.5" OF A.C. PAVEMENT.
   B. CONCRETE DRIVEWAYS SHALL BE SUBCUT TO 12" BELOW FINISH GRADE AND REPLACED WITH 6" OF 2-INCH MINUS SHOT ROCK WITH BASE COURSE, AND 6" OF CONCRETE. TOOLED CONSTRUCTION JOINTS SHALL MATCH EXISTING SPACING OR AS DIRECTED BY THE ENGINEER.
   C. GRAVEL DRIVEWAYS SHALL BE SUBCUT TO 4" BELOW FINISH GRADE AND REPLACED WITH 4" OF BASE COURSE, GRADING D-1.
   D. ORGANICS, ROOTS, WOOD OR OTHER DELETERIOUS MATERIALS ENCOUNTERED IN DRIVEWAYS DURING EXCAVATION OPERATIONS SHALL BE REMOVED AS DIRECTED BY THE ENGINEER AND DISPOSED OF AT AN APPROVED OFFSITE DISPOSAL SITE. BACKFILL VOIDS BELOW THE REQUIRED SUBCUT LAYER WITH USABLE EXCAVATION.
7. PLACE AND GRADE TOPSOIL OR BASE COURSE GRADING D-1 BEYOND THE LIMITS OF THE IMPROVEMENTS TO MATCH TO EXISTING GROUND AND PROVIDE A SMOOTH, WELL DRAINED TRANSITION TO EXISTING GRADES, AS DIRECTED BY THE ENGINEER.
8. GRADE DITCH BACK SLOPES AS REQUIRED TO MATCH TO EXISTING AT A 2:1 CUT SLOPE OR AS NOTED ON THE PLAN SHEETS.
9. BACKFILL TRENCHES, VOIDS FROM EXISTING UTILITY REMOVALS AND ABANDONED CUL-DE-SAC DITCHES WITH USEABLE EXCAVATION. PLACE AND COMPACT MAX 12 INCH THICK LIFTS TO SATISFACTION OF THE ENGINEER.
10. TOP OF PAVEMENT GRADES GIVEN ON THE PLANS ARE ACTUAL FINISHED PAVEMENT SURFACE ELEVATIONS.
11. PROOF ROLLING BOTTOM OF SUBCUT EXCAVATION SHALL BE PERFORMED USING A MINIMUM 10-TON SELF-PROPELLED VIBRATORY COMPACTOR. A MINIMUM OF TWO (2) PASSES (ONE PASS EQUALS DOWN AND BACK) SHALL BE MADE OVER THE SUBCUT SOILS. ADDITIONAL PASSES MAY BE REQUIRED, AS DIRECTED BY THE ENGINEER.
12. THE MISTY LANE AREA IS KNOWN TO HAVE ELEVATED GROUNDWATER CONDITIONS WITH LATERAL GROUNDWATER MOVEMENT. SILT, SAND AND GRAVEL SOIL CONDITIONS ARE KNOWN TO BE LOOSE AND SLOUGH WHEN SATURATED.

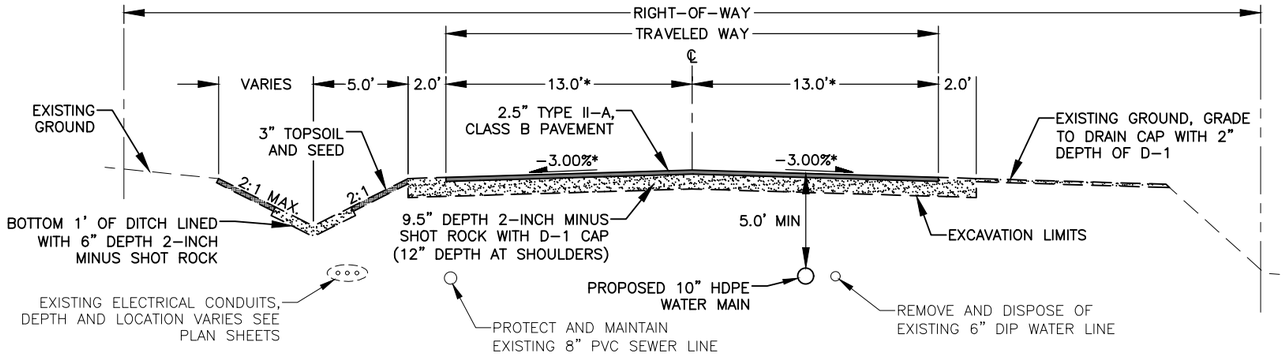

MISTY LANE TYPICAL SECTION STATION RANGE BOP TO 13+70
NTS
*WIDTH AND SLOPE VARIES AT INTERSECTION

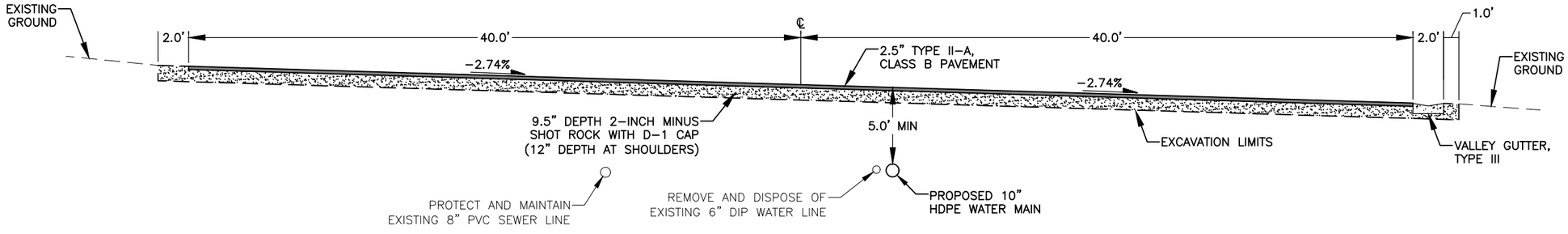

MISTY LANE CUL-DE-SAC TYPICAL SECTION
NTS

STATE OF ALASKA 49TH — LUCAS M. CHAMBERS — 1/31/2022 — CE 106593 — REGISTERED PROFESSIONAL ENGINEER

RECORD OF REVISIONS			
No.	DATE	DESCRIPTION	BY

proHNS LLC
CERTIFICATE OF AUTHORIZATION #100662

DRAWN BY:	E. ROEMELING
DESIGNED BY:	E. ROEMELING
CHECKED BY:	L. CHAMBERS

1945 ALEX HOLDEN WAY #101
JUNEAU, AK 99801
(907) 780-4004
solutions@proHNS.com
www.proHNS.com

CITY AND BOROUGH OF JUNEAU — ALASKA'S CAPITAL CITY
ENGINEERING & PUBLIC WORKS

MISTY LANE RECONSTRUCTION
BE22-217

TYPICAL SECTIONS

SHEET NUMBER C-01 OF 24

January 31, 2022 C:\Users\Ethan Roemeling\Dropbox (proHNS)\Projects\Juneau\CBJ Misty Lane\C3D Misty Lane\Sheets\Misty Ln_TYPICAL.dwg

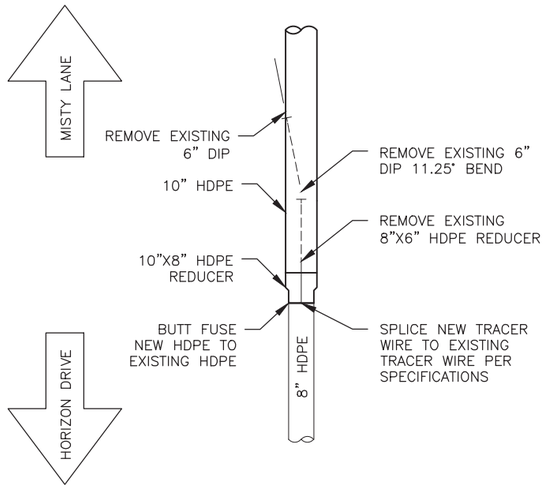

1 C-02 WATERLINE CONNECTION DETAIL ~STA 10+35

SCALE: NOT TO SCALE

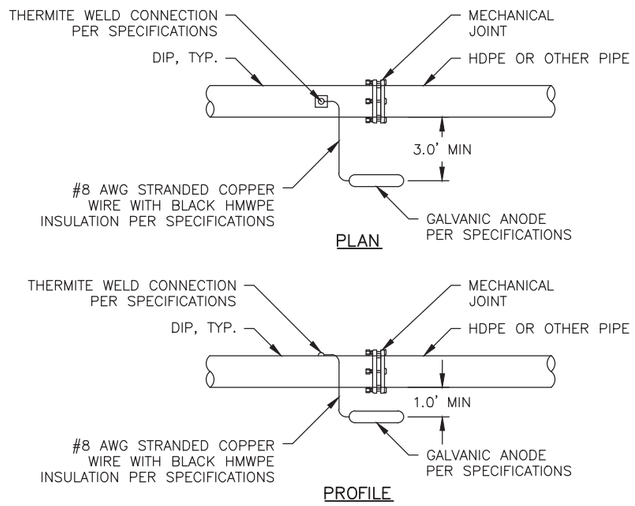

2 C-02 GALVANIC ANODE INSTALLATION FOR PIPE MATERIAL TRANSITION DETAIL

SCALE: NOT TO SCALE

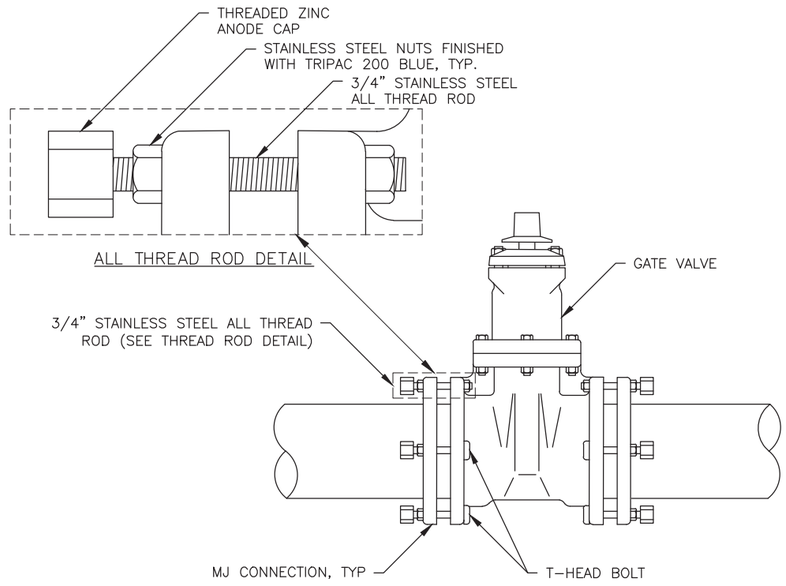

3 C-02 VALVE BOLT CONNECTION DETAIL

SCALE: NOT TO SCALE

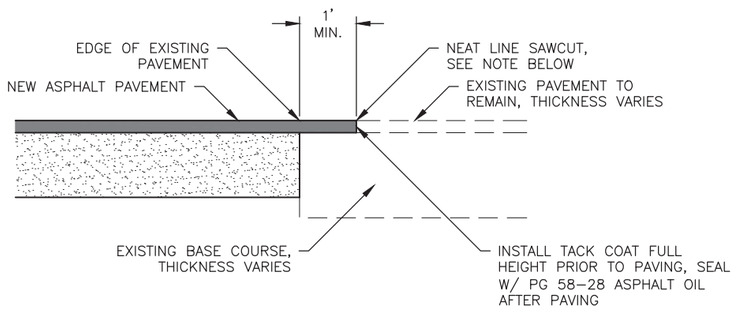

4 C-02 PAVEMENT MATCH JOINT

SCALE: NOT TO SCALE

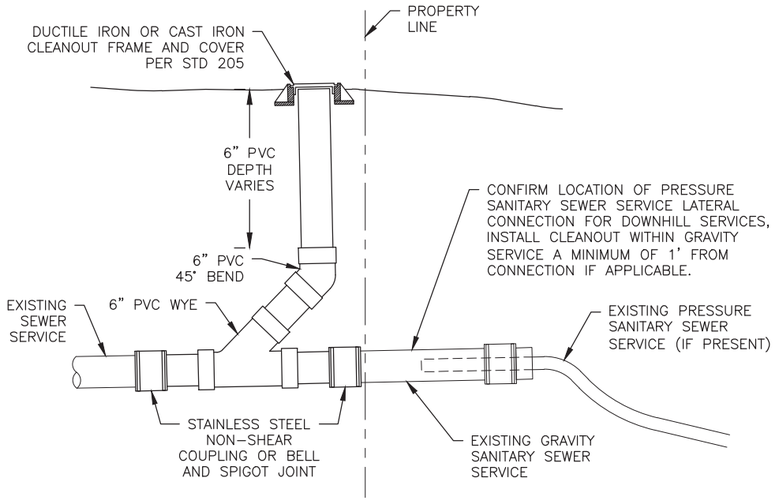

5 C-02 SEWER CLEANOUT FOR EXISTING SERVICE

SCALE: NOT TO SCALE

DETAIL 4/C-02 NOTES:

1. FINAL SAWCUT OF EXISTING ASPHALT SHALL NOT BE MADE UNTIL 24 HOURS PRIOR TO PAVING.

SHEET C-02 NOTES:

1. ALL DI CONNECTIONS SHALL BE MEGALUGGED OR CONNECTED WITH LOCKING FIELD GASKETS. ALL HDPE CONNECTIONS SHALL BE BUTT FUSED, ELECTROFUSION COUPLERS ARE DISCOURAGED AND SHALL ONLY BE ALLOWED WITH PRIOR, WRITTEN APPROVAL OF THE ENGINEER.

STATE OF ALASKA 49TH — LUCAS M. CHAMBERS — 1/31/2022 — CE 106593 — REGISTERED PROFESSIONAL ENGINEER

RECORD OF REVISIONS

No.	DATE	DESCRIPTION	BY

proHNS LLC
CERTIFICATE OF AUTHORIZATION #100662
1945 ALEX HOLDEN WAY #101
JUNEAU, AK 99801
(907) 780-4004
solutions@proHNS.com
www.proHNS.com

DRAWN BY:	E. ROEMELING
DESIGNED BY:	E. ROEMELING
CHECKED BY:	L. CHAMBERS

CITY AND BOROUGH OF JUNEAU — ALASKA'S CAPITAL CITY
ENGINEERING & PUBLIC WORKS

MISTY LANE RECONSTRUCTION

BE22-217

CONSTRUCTION DETAILS -1

SHEET NUMBER C-02 OF 24

January 31, 2022 C:\Users\Ethan Roemeling\Dropbox (proHNS)\Projects\Juneau\CBJ Misty Lane\C3D Misty Lane\Sheets\Misty Ln_DETAILS.dwg

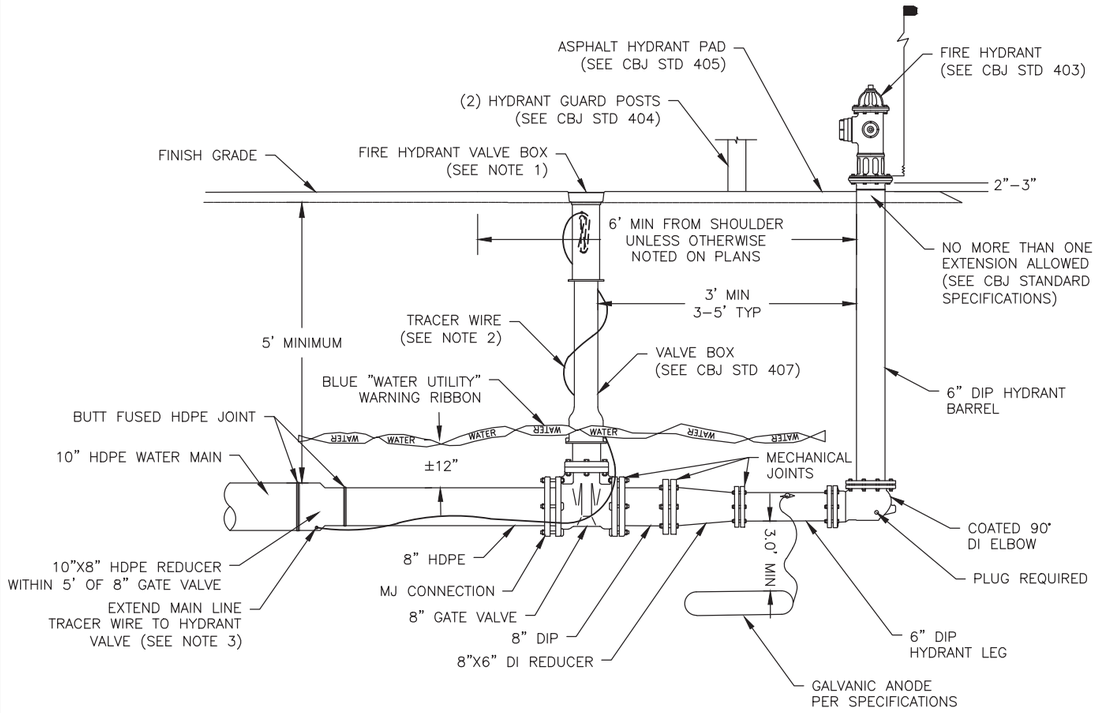

1 C–03 MODIFIED FIRE HYDRANT ASSEMBLY DETAIL

SCALE: NOT TO SCALE

DETAIL 1/C–03 NOTES:

1. FIRE HYDRANT VALVE BOX TO BE INSTALLED SO THAT THE LID IS A MINIMUM OF 3/8", MAXIMUM OF 5/8" BELOW FINISHED PAVEMENT, SEE CBJ STANDARD DETAIL 407.
2. TRACER WIRE SHALL BE NO.10 AWG HIGH–STRENGTH COPPER CLAD STEEL WITH BLUE HDPE INSULATION JACKET. MAIN LINE TRACER WIRE SHALL NOT BE SPLICED AND SHALL BE CONTINUOUS BETWEEN VALVE BOXES. SERVICE AND HYDRANT LEGS SHALL USE WATERPROOF DIRECT BURY SPLICE CONNECTION LUGS. TRACER WIRE SHALL BE CONNECTED TO THE BOTTOM QUADRANT OF THE HDPE WATER PIPE. EACH END OF TRACER WIRE SHALL BE TERMINATED AT A VALVE BOX, TRACER WIRE SHALL RUN OUTSIDE THE VALVE BOX AND BE INSERTED INTO THE VALVE BOX THROUGH A 3/4" DRILLED HOLE WITHIN 9"–12" OF THE TOP. 5' OF ADDITIONAL TRACER WIRE SHALL BE NEATLY COILED WITHIN THE VALVE BOX.
3. TRACER SPLICE CONNECTION ARE TO BE CONSTRUCTED USING DRYCONN WATERPROOF DIRECT BURY LUGS AS MANUFACTURED BY KING INNOVATION OR APPROVED EQUAL.
4. HYDRANT BARREL AND VALVE BOX SHALL BE PLUMB.
5. GROUND COVER SHALL BE 5' MINIMUM. ADDITIONAL COVER (MORE THAN 5') MAY BE REQUIRED BY THE ENGINEER.
6. ALL HYDRANTS SHALL BE PAINTED CATERPILLAR YELLOW, AND THE NUMBER OF FEET TO THE VALVE SHALL BE PRINTED IN BLACK 1/2" BLOCK LETTERS JUST BELOW THE TOP BONNET. PORT CAPS SHALL BE COLOR CODED PER NFPA STANDARD 291 AS DIRECTED BY THE CBJ WATER UTILITIES DEPARTMENT.
7. HYDRANT SHALL BE MUELLER CENTURION 200 OR 250 WITH INTEGRAL STORZ PUMPER CONNECTION OR APPROVED EQUAL. CLOW F2500 SERIES HYDRANTS ARE NO LONGER ACCEPTED BY CBJ.
8. ALL BOLTS TO HAVE THREADED ZINC ANODE CAP, SEE DETAIL 3 SHEET C–02.

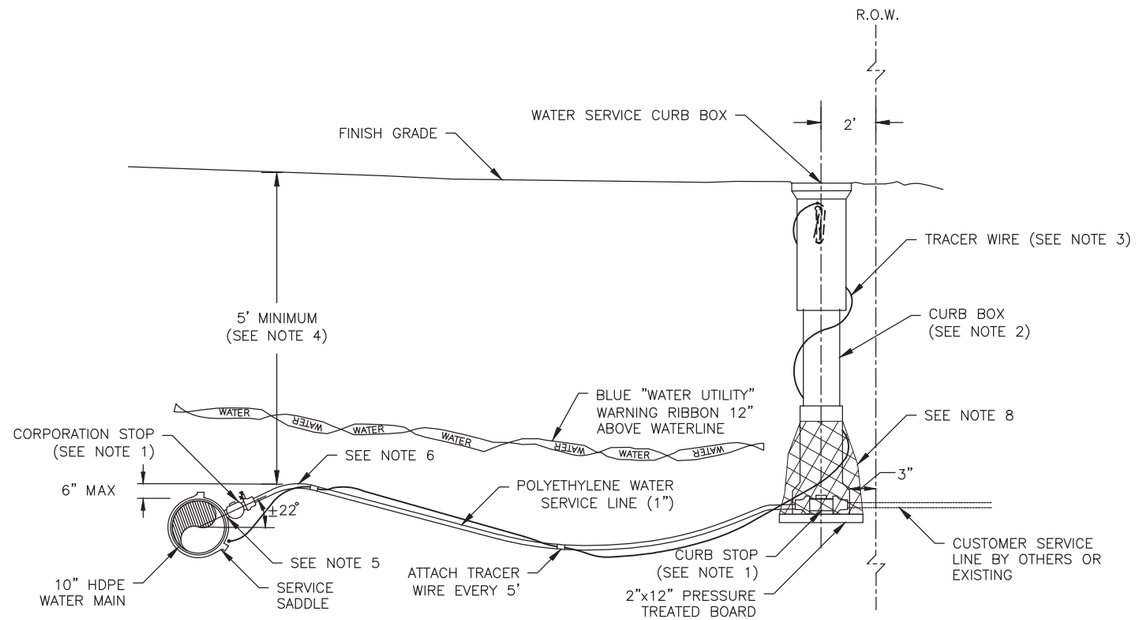

2 C–03 POLYETHYLENE WATER SERVICE DETAIL

SCALE: NOT TO SCALE

DETAIL 2/C–03 NOTES:

1. USE MUELLER CORPORATION STOP NO. B25025, FORD CORPORATION STOP NO. FB700–4, OR APPROVED EQUAL. USE MUELLER CURB STOP NO. H15201, OR NO. H15204, FORD CURB STOP B22–444 OR APPROVED EQUAL.
2. CURB BOX SHALL BE KEJRIWAL PACIFIC 145R 49"–62" LID, TOP, MIDDLE AND BOTTOM OR APPROVED EQUIVALENT.
3. TRACER WIRE SHALL BE NO.10 AWG HIGH–STRENGTH COPPER CLAD STEEL WITH BLUE HDPE INSULATION JACKET. MAIN LINE TRACER WIRE SHALL NOT BE SPLICED AND SHALL BE CONTINUOUS BETWEEN VALVE BOXES. SERVICES SHALL USE WATERPROOF DIRECT BURY SPLICE CONNECTION LUGS. TRACER WIRE SHALL BE CONNECTED TO THE BOTTOM QUADRANT OF THE HDPE WATER PIPE. EACH END OF TRACER WIRE SHALL BE TERMINATED AT A VALVE BOX, TRACER WIRE SHALL RUN OUTSIDE THE VALVE BOX AND BE INSERTED INTO THE VALVE BOX THROUGH A 3/4" DRILLED HOLE WITHIN 9"–12" OF THE TOP. 5' OF ADDITIONAL TRACER WIRE SHALL BE NEATLY COILED WITHIN THE VALVE BOX.
4. ALL SERVICES MUST HAVE A MINIMUM OF 5' OF COVER BELOW EXISTING CULVERTS AND DITCHES. ADDITIONAL DEPTH MAY BE REQUIRED BY THE ENGINEER. INSULATE SERVICE LINES PER CBJ STD 412 WHERE NEEDED.
5. HOLE DRILLED IN THE MAIN FOR THE CORPORATION STOP SHALL BE THE SAME DIAMETER AS THE SERVICE PIPE.
6. PROVIDE AN ADDITIONAL 12" OF SERVICE PIPE BEYOND STRAIGHT LINE LENGTH REQUIRED. LOOP AS SHOWN AT THE CORP STOP. MAINTAIN 5' MINIMUM BURIAL AT HIGH POINT OF SERVICE LINE.
7. MAINTAIN A MINIMUM OF 18" OF SEPARATION BETWEEN VALVE BOXES, AND BETWEEN VALVE BOXES AND OTHER STRUCTURES.
8. WRAP BOTTOM OF CURB BOX WITH FABRIC OR PLASTIC PRIOR TO BACKFILLING TO KEEP MATERIAL FROM INFILTRATING THE BOX.
9. SERVICE BOXES SHALL BE LOCATED 2 FEET INSIDE OF THE RIGHT–OF–WAY LINE.
10. CONTRACTOR TO SUPPLY ALL NECESSARY PARTS AND FITTINGS TO CONNECT THE PROPOSED 1" WATER SERVICES TO THE EXISTING WATER SERVICES AFTER THE CURB STOP.

STATE OF ALASKA 49TH
LUCAS M. CHAMBERS
1/31/2022
CE 106593
REGISTERED PROFESSIONAL ENGINEER

RECORD OF REVISIONS

No.	DATE	DESCRIPTION	BY

proHNS LLC
CERTIFICATE OF AUTHORIZATION #100662
1945 ALEX HOLDEN WAY #101
JUNEAU, AK 99801
(907) 780-4004
solutions@proHNS.com
www.proHNS.com

DRAWN BY:	E. ROEMELING
DESIGNED BY:	E. ROEMELING
CHECKED BY:	L. CHAMBERS

CITY AND BOROUGH OF JUNEAU
ALASKA'S CAPITAL CITY
ENGINEERING & PUBLIC WORKS

MISTY LANE RECONSTRUCTION
BE22-217

CONSTRUCTION DETAILS - 2

SHEET NUMBER C-03 OF 24

C:\Users\Ethan Roemeling\Dropbox (proHNS)\Projects\Juneau\CBJ Misty Lane\Sheets\Misty Ln_DETAILS.dwg
January 31, 2022

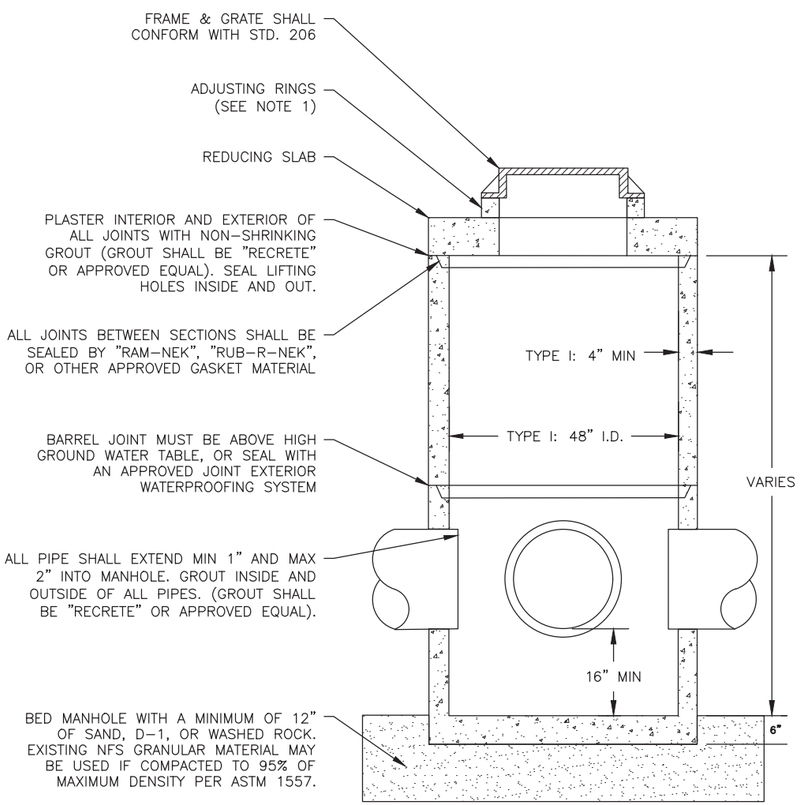

CONCENTRIC STORM DRAIN MANHOLE WITH REDUCING SLAB – TYPE I

1 / C-04

SCALE: NOT TO SCALE

DETAIL 1/C-04 NOTES:

1. THE AREA BETWEEN THE TOP OF THE CATCH BASIN AND THE FRAME SHALL BE FILLED WITH CONCRETE MEETING THE REQUIREMENTS OF CBJ SPECIFICATION 03302-CONCRETE STRUCTURES. NO BRICKS, WOOD, STONES, ADJUSTING RINGS, OR OTHER GRADE ADJUSTMENT DEVICES SHALL BE USED. TEMPORARY FORM WORK SHALL BE CONSTRUCTED TO PROVIDE A SMOOTH INSIDE EXPOSED SURFACE FREE OF VOIDS AND PROJECTIONS. THE CONSTRUCTED FRAME SUPPORT MUST MATCH THE INTERIOR OF THE FRAME INSTALLED AS APPROVED BY THE ENGINEER.

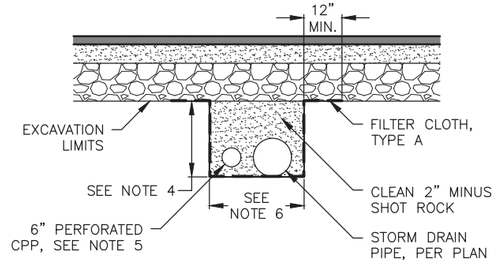

TRENCH DETAIL

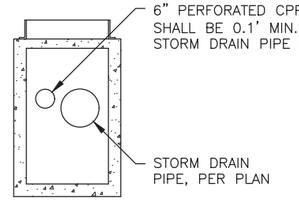

CONNECT TO STORM DRAIN STURCTURE

6-INCH CPP UNDERDRAIN

2 / C-04

SCALE: NOT TO SCALE

DETAIL 2/C-04 NOTES:

1. OUTFALL CONNECTIONS WILL BE INTO CATCH BASINS.
2. BOTH ENDS OF PIPES SHALL BE CONNECTED IN STORM DRAIN STRUCTURES OR CAPPED, SEE PLANS. FILTER CLOTH SHALL BE FOLDED AND OVERLAPPED TO SEAL END OF DRAIN ROCK SECTION.
3. PROVIDE KNOCK OUTS IN STORM DRAIN STRUCTURES LARGE ENOUGH TO ACCOMMODATE BOTH UNDERDRAIN AND STORM DRAIN PIPE.
4. DEPTH VARIES SEE PLAN OR PROFILE SHEETS.
5. MINIMUM PIPE SLOPE SHALL BE 1.00%.
6. TRENCH WIDTH SHALL BE 3'-2" WIDE AT 18" STORM PIPE CROSSINGS AND 1'-6" WIDE WHEN NO STORM DRAIN PIPE IS PRESENT.
7. INSTALL CLEANOUTS PER STANDARD SEWER SERVICE CLEANOUT DETAIL.

STATE OF ALASKA 49TH
LUCAS M. CHAMBERS
1/31/2022
CE 106593
REGISTERED PROFESSIONAL ENGINEER

RECORD OF REVISIONS			
No.	DATE	DESCRIPTION	BY

proHNS LLC
CERTIFICATE OF AUTHORIZATION #100662
1945 ALEX HOLDEN WAY #101
JUNEAU, AK 99801
(907) 780-4004
solutions@proHNS.com
www.proHNS.com

DRAWN BY:	E. ROEMELING
DESIGNED BY:	E. ROEMELING
CHECKED BY:	L. CHAMBERS

CITY AND BOROUGH OF JUNEAU
ALASKA'S CAPITAL CITY
ENGINEERING & PUBLIC WORKS

MISTY LANE RECONSTRUCTION

BE22-217

CONSTRUCTION DETAILS -3

SHEET NUMBER C-04 OF 24

January 31, 2022 C:\Users\Ethan Roemeling\Dropbox (proHNS)\Projects\Juneau\CBJ Misty Lane\C3D Misty Lane\Sheets\Misty Ln_DETAILS.dwg

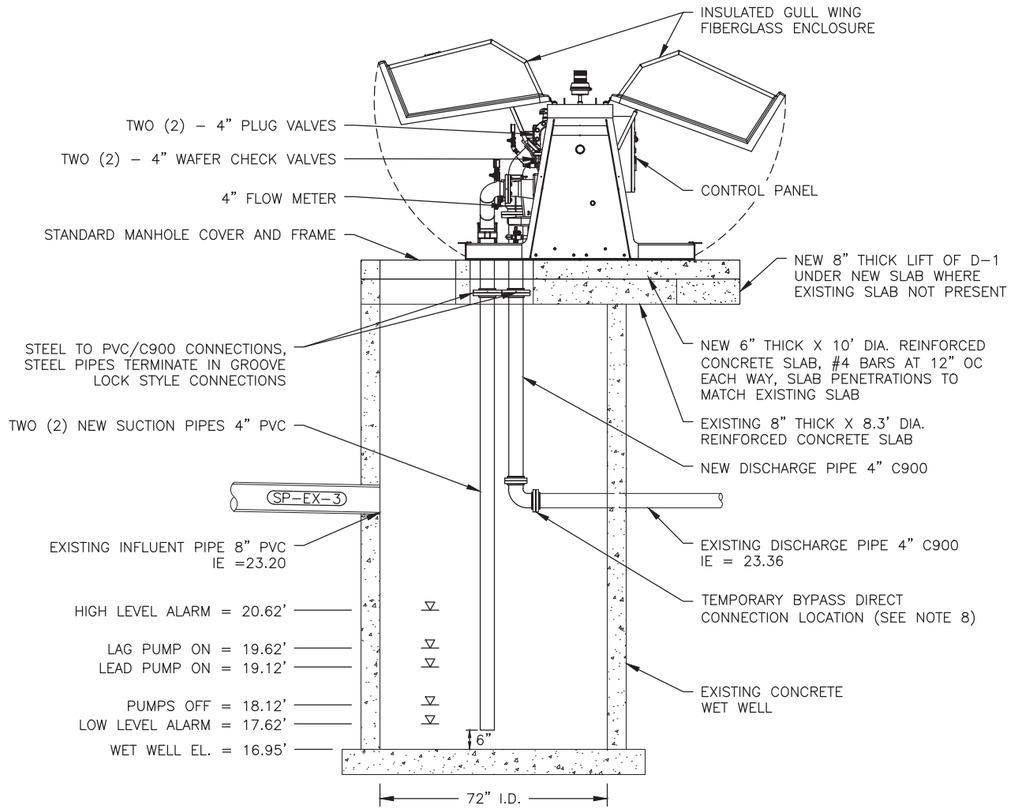

1 / C-05 SANITARY SEWER LIFT STATION SECTION

SCALE: NOT TO SCALE

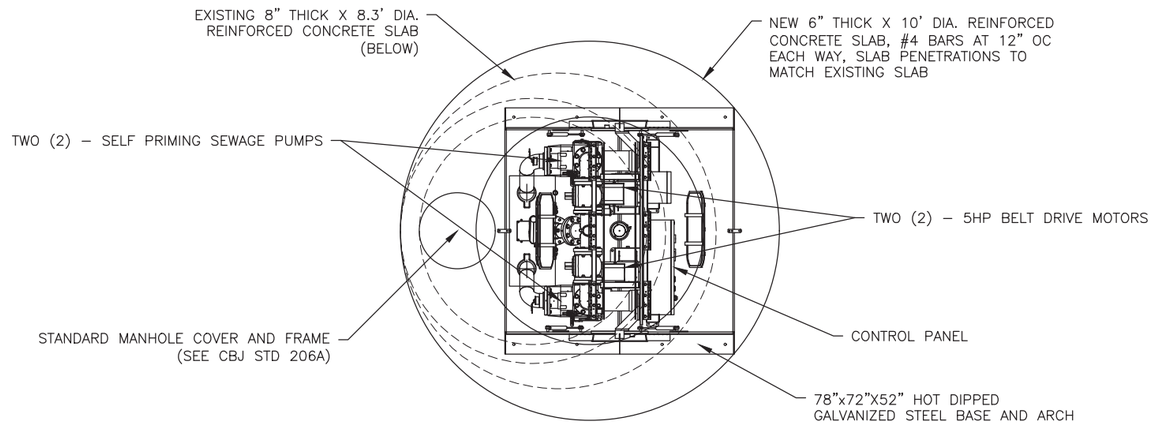

2 / C-05 SANITARY SEWER LIFT STATION PLAN

SCALE: NOT TO SCALE

SHEET C-05 NOTES:

1. ALL EXISTING EXTERIOR MANHOLE JOINTS TO BE WATERPROOFED USING MIRADRI SYSTEM BY MIRIFI, INC. OR AN APPROVED EQUAL.
2. ALL PVC AND C900 PIPE AND PIPE JOINTS ARE TO MEET THE REQUIREMENTS OF SECTION 02401 – SANITARY SEWER PIPE.
3. ALL HARDWARE AND BRACKETS ARE TO BE 316 STAINLESS STEEL.
4. PACKAGED LIFT STATION INCLUDING; FIBERGLASS ENCLOSURE, STEEL BASE AND ARCH, PUMPS, MOTORS, METERS, VALVES, INTERIOR PIPING, AND CONTROL PANEL TO BE PES MODEL 183 BY PUMPTECH OR APPROVED EQUAL.
5. PUMPS SHALL BE HYDROMATIC MP 40 OR APPROVED EQUAL. MOTORS SHALL BE BALDOR EL1410T OR APPROVED EQUAL.
6. LIFT STATION COMMUNICATIONS PANEL NOT SHOWN, SEE ELECTRICAL.
7. THE CONTRACTOR WILL INSTALL AND TEST THE LIFT STATION USING A PUMP MANUFACTURER REPRESENTATIVE THAT WILL CERTIFY THE INSTALLATION FOR WARRANTY PURPOSES. THE CONTRACTOR WILL PROVIDE AT LEAST 72 HOURS NOTICE TO THE CBJ WASTEWATER UTILITY DEPARTMENT PRIOR TO BEGINNING THE PUMP TEST.
8. CONTRACTOR SHALL SUPPORT EXISTING DISCHARGE PIPE TO REMAIN WHILE INSTALLING BYPASS ASSEMBLY TO LIMIT VERTICAL MOVEMENT OF THE PIPE. SUPPORT AND RESTRAIN BYPASS ASSEMBLY FOR THE DURATION OF BYPASS. BYPASS ASSEMBLY SHALL NOT PLACE VERTICAL LOAD ON EXISTING DISCHARGE PIPE. CONTRACTOR SHALL SUPPLY CHECK VALVE FOR BYPASS ASSEMBLY TO PREVENT BACKFLOW THROUGH THE FORCE MAIN.

LIFT STATION OPERATIONS

PARAMTERS	
PEAK FLOW (GPM)	88
PUMP DESIGN FLOW RATE (GPM)	100
ACTIVE VOLUME (GALLONS)	212
ELEVATION OF LOWEST PIPE INLET (FT)	23.20
HIGH LEVEL ALARM (FT)	20.62
LAG PUMP LEVEL ON (FT)	19.62
LEAD PUMP LEVEL ON (FT)	19.12
LOW LEVEL PUMPS OFF (FT)	18.12
LOW LEVEL ALARM (FT)	17.62
BASE ELEVATION OF WET WELL (FT)	16.95

NOTE: THIS IS THE INITIAL OPERATIONAL SCHEME FOR THE LIFT STATION. THE CONTRACTOR, IN THE PRESENCE OF THE ENGINEER, WILL MEASURE ACTUAL PUMP FLOW-RATES FOLLOWING INSTALLATION AND ADJUST THE OPERATIONS AS NECESSARY TO OPTIMIZE OPERATIONS. THE CONTRACTOR WILL COORDINATE WITH CBJ WASTEWATER WHEN OPTIMIZING OPERATIONS.

STATE OF ALASKA 49TH — LUCAS M. CHAMBERS — 1/31/2022 — CE 106593 — REGISTERED PROFESSIONAL ENGINEER

RECORD OF REVISIONS

No.	DATE	DESCRIPTION	BY

proHNS LLC
CERTIFICATE OF AUTHORIZATION #100662
1945 ALEX HOLDEN WAY #101
JUNEAU, AK 99801
(907) 780-4004
solutions@proHNS.com
www.proHNS.com

DRAWN BY:	E. ROEMELING
DESIGNED BY:	E. ROEMELING
CHECKED BY:	L. CHAMBERS

CITY AND BOROUGH OF JUNEAU — ALASKA'S CAPITAL CITY — ENGINEERING & PUBLIC WORKS

MISTY LANE RECONSTRUCTION

BE22-217

LIFT STATION DETAILS

SHEET NUMBER C-05 OF 24

January 31, 2022 C:\Users\Ethan Roemeling\Dropbox (proHNS)\Projects\Juneau\CBJ Misty Lane\C3D Misty Lane\Sheets\Misty Ln_DETAILS.dwg

WATER SERVICE SUMMARY

SERVICE TO	STATION & OFFSET	SIZE/TYPE	REMARKS
10638 HORIZON DRIVE	10+70.70, 28.66 RT	1" POLY	SEE NOTE 3
10641 MISTY LANE	11+54.05, 29.00 LT	1" POLY	SEE NOTE 1 & 4
10640 MISTY LANE	11+87.00, 29.00 RT	1" POLY	SEE NOTES 1 & 2
10644 MISTY LANE	12+82.00, 29.00 RT	1" POLY	SEE NOTES 1 & 2
10645 MISTY LANE	13+84.00, 29.00 LT	1" POLY	SEE NOTE 1
10649 MISTY LANE	13+73.00, 29.00 LT	1" POLY	SEE NOTE 1
10648 MISTY LANE	14+30.00, 46.37 RT	1" POLY	SEE NOTE 1
10652 MISTY LANE	14+45.00, 48.99 RT	1" POLY	SEE NOTES 1 & 2
10656 MISTY LANE	14+91.00, 18.93 RT	1" POLY	SEE NOTE 1

NOTES:
1. INSTALL NEW WATER SERVICE AND CURB BOX PER DETAIL 2 SHEET C-03, CONNECT TO EXISTING WATER SERVICE IF EXISTING. STATION AND OFFSET ARE GIVEN TO THE CENTER OF VALVE BOX. REMOVE AND DISPOSE OF EXISTING CURB BOX AND CURB STOP IF EXISTING.
2. THIS WATER SERVICE BOX WAS NOT FIELD LOCATED, CONTRACTOR SHALL DETERMINE THE LOCATION OF THE EXISTING WATER SERVICE, PRIOR TO INSTALLING NEW WATER SERVICE.
3. REMOVE EXISTING SERVICE AND VALVE BOX AND DO NOT REPLACE.
4. EXISTING CURB BOX IS LOCATED OUTSIDE OF THE ROW. REMOVE EXISTING CURB BOX AND INSTALL NEW CUSTOMER SERVICE LINE FROM NEW CURB BOX TO LOCATION OF REMOVED CURB BOX.

SEWER SERVICE SUMMARY

SERVICE TO	STATION & OFFSET	SIZE/TYPE	REMARKS
10638 HORIZON DRIVE	10+66.42, 28.69 RT	6" PVC	SEE NOTES 3
10640 MISTY LANE	11+61.39, 28.94 RT	6" PVC	SEE NOTES 1, 2 & 5
10641 MISTY LANE	12+01.38, 29.00 LT	6" PVC	SEE NOTES 1 & 2
10644 MISTY LANE	12+76.48, 29.00 RT	6" PVC	SEE NOTES 1 & 2
10645 MISTY LANE	13+15.54, 29.00 LT	6" PVC	SEE NOTES 1
10648 MISTY LANE	13+90.29, 29.00 RT	6" PVC	SEE NOTES 1 & 4
10649 MISTY LANE	14+01.78, 29.00 LT	6" PVC	SEE NOTES 1 & 2
10651 MISTY LANE	14+75.72, 38.82 LT	6" PVC	SEE NOTES 1 & 2
10652 MISTY LANE	14+82.11, 32.91 RT	6" PVC	SEE NOTES 1 & 2
10656 MISTY LANE	14+95.56, 14.67 RT	6" PVC	SEE NOTES 1 & 2

NOTES:
1. INSTALL NEW SEWER CLEANOUT PER DETAIL 5 SHEET C-02 AND CBJ STANDARD DETAIL 213, CONNECT TO EXISTING SEWER SERVICE IF EXISTING. STATION AND OFFSET ARE GIVEN TO THE CENTER OF CLEANOUT.
2. THIS SEWER SERVICE WAS NOT FIELD LOCATED, CONTRACTOR SHALL DETERMINE THE LOCATION OF THE EXISTING SEWER SERVICE, PRIOR TO INSTALLING NEW SEWER SERVICE.
3. CAP SEWER SERVICE LINE AT MAIN LINE WYE AND REMOVE EXISTING SERVICE LINE AND CLEANOUT, DO NOT REPLACE.
4. CAP SEWER SERVICE LINE AT MAIN LINE WYE AND REMOVE EXISTING SERVICE LINE AND CLEANOUT, INSTALL NEW SERVICE LINE, SEE PLAN VIEW FOR LAYOUT.
5. EXISTING PRESSURE SEWER SERVICE, PRIOR TO INSTALLATION OF CLEANOUT, CONTRACTOR SHALL CONFIRM LOCATION OF PRESSURE SEWER SERVICE CONNECTION. INSTALL CLEANOUT WITHIN GRAVITY SERVICE A MINIMUM OF 1' FROM CONNECTION.

ADJUST SANITARY SEWER MANHOLE TO GRADE

MANHOLE NUMBER	STATION & OFFSET	LID ELEVATION	INVERT ELEVATION	STRUCTURE DEPTH	REMARKS
SS-EX-3	13+64.72, 10.80 LT	28.29	24.00	4.29	SEE NOTES 1
SS-EX-2	11+01.10, 0.37 RT	37.77	31.80	5.97	SEE NOTES 1

NOTES:
1. REMOVE EXISTING COVER AND FRAME AND REPLACE WITH NEW, SEE CBJ STANDARD DETAIL 206A. INSTALL NEW COVER AND FRAME USING AN INFRA-RISER (RECYCLED RUBBER) GRADE RING. ADJUST TO GRADE,REMOVE EXISTING GRADE RINGS AS NECESSARY.

STORM DRAIN STRUCTURE FRAME & GRATE SUMMARY

STRUCTURE NO.	EAST JORDAN, OLYMPIC FOUNDRY CO., NEENAH FOUNDRY, CBJ STANDARD NO., OR APPROVED EQUAL
S-1	OFCO MH34SCDI & SLOTTED COVER
S-2	OFCO MH34SCDI & SLOTTED COVER

NOTES:
1. CATCH BASIN TOP SLAB OPENINGS SHALL BE DIMENSIONED TO FIT THE FRAME DIMENSIONS. ALL GRATES SHALL BE HEAVY DUTY CONSTRUCTION & BICYCLE SAFE. ALL FRAMES & GRATES TO BE DUCTILE IRON.
2. INSTALL SDMH WITH CONCENTRIC SLAB OR CONE AND DO NOT INSTALL LADDER.

STORM DRAIN PIPE REMOVAL SUMMARY

SIZE	PIPE TYPE	INLET	OUTLET	APPROXIMATE LINEAR FOOTAGE
		STATION & OFFSET	STATION & OFFSET	
12"	CMP	11+54.88, 22.61 LT	11+75.87, 18.94 LT	20
12"	CMP	12+03.80, 20.89 LT	12+14.82, 28.56 LT	13
12"	CMP	12+37.08, 46.05 LT	12+25.58, 29.28 LT	20
20"	CMP	12+18.16, 27.40 LT	12+25.63, 37.33 RT	65
12"	CMP	12+85.52, 18.82 LT	13+05.46, 18.54 LT	20
12"	CPP	13+46.58, 17.19 LT	13+36.23, 25.65 RT	44
10.5"	CMP	14+36.89, 39.02 LT	14+75.23, 32.75 LT	39
10.5"	CMP	14+73.77, 33.62 RT	14+53.98, 41.10 RT	21
10.5"	CMP	14+86.48, 13.08 LT	14+88.21, 7.01 RT	20

FIRE HYDRANT SUMMARY

REMARKS	STATION & OFFSET
INSTALL NEW HYDRANT WITH GATE VALVE & BOLLARDS	14+80.06, 28.49 LT

ANODES SUMMARY

INSTALLED ON	STATION & OFFSET
FIRE HYDRANT	14+78.36, 27.25 LT

RECONSTRUCT MAILBOX SUMMARY

HOUSE NUMBER	STATION & OFFSET	COMMENTS
10640 MISTY LANE	11+02.05, 19.5 RT	3.5' CANTILEVER ARM SINGLE MAILBOX
10641 MISTY LANE	11+77.23, 18.5 LT	3.5' CANTILEVER ARM SINGLE MAILBOX
10645 MISTY LANE	13+07.44, 18.5 LT	3.5' CANTILEVER ARM SINGLE MAILBOX
10648 MISTY LANE	13+68.42, 19.5 RT	3.5' CANTILEVER ARM SINGLE MAILBOX
10649 MISTY LANE	13+92.54, 23.11 LT	3.5' CANTILEVER ARM SINGLE MAILBOX
10651 MISTY LANE	14+72.65, 32.50 LT	3.5' CANTILEVER ARM SINGLE MAILBOX
10652/10656 MISTY LANE	14+81.44, 22.60 RT	3.5' CANTILEVER ARM GANG MAILBOX

NOTES:
1. STATION AND OFFSET ARE GIVEN TO CENTER OF VERTICAL 4"X4" POST. CONTRACTOR SHALL STAKE MAILBOX POST LOCATION FOR APPROVAL BY THE ENGINEER.
2. REINSTALL EXISTING MAILBOX AND NEWSPAPER RECEPTACLES TO NEW POST AND ARM ASSEMBLIES. IF THE RECEPTACLES ARE DAMAGED BY THE CONTRACTOR, NEW RECEPTACLES OF THE SAME SIZE, COLOR AND STYLE WITH NEW HOUSE NUMBERS SHALL BE PROVIDED BY THE CONTRACTOR.
3. MAIL DELIVERY SERVICE SHALL NOT BE INTERRUPTED AND ACCESS TO EACH MAILBOX RECEPTACLE SHALL BE AVAILABLE TO THE UNITED STATES POSTAL SERVICE AND THE RESIDENTS AT ALL TIMES.
4. PRESERVE AND PROTECT UNDERGROUND ELECTRICAL CONDUITS WHEN INSTALLING NEW POSTS.

STATE OF ALASKA 49TH
LUCAS M. CHAMBERS
1/31/2022
CE 106593
REGISTERED PROFESSIONAL ENGINEER

RECORD OF REVISIONS

No.	DATE	DESCRIPTION	BY

proHNS LLC
CERTIFICATE OF AUTHORIZATION #100662

DRAWN BY:	E. ROEMELING
DESIGNED BY:	E. ROEMELING
CHECKED BY:	L. CHAMBERS

1945 ALEX HOLDEN WAY #101
JUNEAU, AK 99801
(907) 780-4004
solutions@proHNS.com
www.proHNS.com

CITY AND BOROUGH OF JUNEAU
ALASKA'S CAPITAL CITY
ENGINEERING & PUBLIC WORKS

MISTY LANE RECONSTRUCTION
BE22-217

SUMMARY TABLES

SHEET NUMBER
C-06
OF
24

January 31, 2022 C:\Users\Ethan Roemeling\Dropbox (proHNS)\Projects\Juneau\CBJ Misty Lane\C3D Misty Lane\Sheets\Misty Ln_SUMMARY TABLES.dwg

SS-EX-1	
STA: 9+85.29	OFF: 36.55 LT
FRAME EL=	42.77
SP-EX-3	37.60
SP-EX-4	37.70
SP-EX-5	37.70

SS-EX-2	
STA: 11+01.10	OFF: 0.37 RT
FRAME EL=	37.88
SP-EX-2	31.80
SP-EX-3	32.00

STORM DRAIN PIPE SUMMARY				
PIPE NO.	DIA	LENGTH	TYPE	SLOPE
P-1	18"	28.7	CPP	2.90%
P-2	12"	24.3	CPP	0.50%

JAMES & PEGGY
PETROPULOS
10641 MISTY LANE

HEADWALL
STA: 12+37.08
OFFSET: 46.05 LT
INV. EL.: 29.63

PROTECT AND MAINTAIN EXISTING SPRUCE TREES

HEADWALL
STA: 12+40.11
OFFSET: 22.0 LT
INV. EL.: 29.51

SEE NOTE 8

REMOVE EXISTING ALDER TREES, STUMPS AND ROOTS REQUIRED FOR P-2 INSTALLATION

SEE NOTE 9

SEE NOTE 3

REMOVE EXISTING CURB BOX AND INSTALL NEW CUSTOMER SERVICE LINE FROM NEW CURB BOX TO LOCATION OF REMOVED CURB BOX, SEE NOTE 4

HEADWALL
STA: 11+80.93
OFFSET: 21.0 LT
INV. EL.: 32.09

SEE NOTE 2

CONCRETE DRIVEWAY

GRAVEL DRIVEWAY

BEGIN DITCH
STA: 10+27.74
OFFSET: 24.36 LT
EL.: MTE

FIELD LOCATE AND CONNECT TO EXISTING 8" HDPE ± STA 10+35 SEE WATER LINE CONNECTION DETAIL 1 SHEET C-02

INSULATE NEW WATER LINE PER CBJ STD 412

HEADWALL
STA: 11+50.56
OFFSET: 23.00 LT
INV. EL.: 32.92

SS-EX-1

SS-EX-2

SP-EX-1

SP-EX-2

HORIZON DRIVE

MISTY LANE

SAWCUT & MTE

10+00

10+50

11+00

11+50

12+00

12+50

8" PVC

18" CPP

12" CMP

20" CMP

10" HDPE WATERLINE

6" DIP

10' MINIMUM SEPARATION

CAP SEWER SERVICE LINE AT MAIN LINE WYE AND REMOVE EXISTING SERVICE LINE AND CLEANOUT

EXISTING SERVICE TO BE REMOVED AND NOT REPLACED

CHRISTINA & JOSHUA
SIMONSON
10638 HORIZON DRIVE

ASPHALT DRIVEWAY

ASPHALT DRIVEWAY

SEE NOTE 2

SEE NOTE 3

GERALD & PAMELA
RACE
10640 MISTY LANE

HEINZ & VALERIA
BUSCHFORT
10644 MISTY LANE

SCALE IN FEET
10 0 10 20

SHEET NOTES:

1. CULVERT LENGTHS AND SLOPES ARE MEASURED TO ENDS OF PIPES.
2. INSTALL NEW WATER SERVICE, SEE SUMMARY ON SHEET C-06.
3. INSTALL NEW SEWER SERVICE CLEANOUT, SEE SUMMARY ON SHEET C-06.
4. PROVIDE ALL PIPE EXTENSIONS, ADAPTERS, ELBOWS AND OTHER FITTINGS NECESSARY TO CONNECT TO DISSIMILAR PIPE SIZES, MATERIALS, AND DEPTHS.
5. HDPE PIPE DEFLECTIONS SHALL NOT EXCEED PIPE MANUFACTURERS RECOMMENDATIONS.
6. SEE STANDARD SPECIFICATIONS, ERRATAS AND SPECIAL PROVISION SECTION 02601 WATER PIPE FOR WATERLINE INSTALLATION FOR TESTING, DISINFECTION & INSTALLATION REQUIREMENTS.
7. MAINTAIN 18" MINIMUM VERTICAL SEPARATION BETWEEN PROPOSED WATER PIPE AND ALL STORM OR SANITARY SEWER PIPE CROSSINGS, SEE STD DETAIL 215.
8. UNDERGROUND ELECTRICAL UTILITIES BELIEVED TO CROSS EXISTING STORM DRAIN PIPE. PROTECT AND MAINTAIN ALL CABLES AND CONDUITS, ADJUST AS NEEDED FOR INSTALLATION OF P-2.
9. SPECIAL DITCH BACKFILL WITH USABLE EXCAVATION. PLACE AND COMPACT MAX 12 INCH THICK LIFTS TO SATISFACTION OF THE ENGINEER. SEE SPECIAL DITCH DETAIL, SHEET C-01.

STATE OF ALASKA 49TH
LUCAS M. CHAMBERS
1/31/2022
CE 106593
REGISTERED PROFESSIONAL ENGINEER

RECORD OF REVISIONS

No.	DATE	DESCRIPTION	BY

proHNS LLC
CERTIFICATE OF AUTHORIZATION #100662

DRAWN BY:	E. ROEMELING
DESIGNED BY:	E. ROEMELING
CHECKED BY:	L. CHAMBERS

1945 ALEX HOLDEN WAY #101
JUNEAU, AK 99801
(907) 780-4004
solutions@proHNS.com
www.proHNS.com

CITY AND BOROUGH OF JUNEAU
ALASKA'S CAPITAL CITY
ENGINEERING & PUBLIC WORKS

MISTY LANE RECONSTRUCTION

BE22-217

PLAN - BOP TO 12+60

SHEET NUMBER
C-07
OF
24

C:\Users\Ethan Roemeling\Dropbox (proHNS)\Projects\Juneau\CBJ Misty Lane\Sheets\Misty Ln_PLAN.dwg
January 31, 2022

STORM DRAIN PIPE SUMMARY				
PIPE NO.	DIA	LENGTH	TYPE	SLOPE
P-3	18"	34.0	CPP	1.94%
P-4	18"	32.3	CPP	6.00%
P-5	12"	66.0	CPP	0.50%
P-6	18"	12.8	CPP	0.50%

SS-EX-3	
STA: 14+25.70	OFF: 11.83 LT
FRAME EL=	29.19
SP-EX-1	24.00
SP-EX-2	24.20

MARY ANDREWS &
AXEL BACHMANN
10645 MISTY LANE

JASON & ELIZABETH
BRENNELL
10649 MISTY LANE

CHRISTOPHER &
RAEANNE HOLMES
10651 MISTY LANE

(WATER SERVICE FOR THIS
LOT FROM HORIZON DRIVE)

MTE DITCH
STA: 13+53.60
OFFSET: 49.90 LT
INV. EL.: 29.21

HEADWALL W/ TRASHRACK
STA: 13+29.42
OFFSET: 18.30 LT
INV. EL.: 27.79

STORM CLEANOUT
STA: 13+27.42
OFFSET: 14.00 LT

SEE NOTE 4

HEADWALL
STA: 13+10.44
OFFSET: 20.0 LT
INV. EL.: 28.15

HEADWALL
STA: 12+76.44
OFFSET: 21.0 LT
INV. EL.: 28.81

INSTALL NEW STREET LIGHT
STA: 13+65.46
OFFSET: 23.89 LT

SEE NOTE 3

STORM CLEANOUT
STA: 13+95.90
OFFSET: 23.90 LT

BEGIN DITCH
STA: 13+88.17
OFFSET: 23.11 LT
EL.: 28.50

INSTALL NEW SEWER
SERVICE WYE
STA: 14+20.74
OFFSET: 12.61 LT

SEE
NOTE 4

BOLLARDS
STA: 14+39.01
OFFSET: 54.48 LT
STA: 14+39.15
OFFSET: 50.48 LT

EQUIPMENT RACK FOOTINGS
STA: 14+40.56
OFFSET: 53.20 LT
STA: 1+43.56
OFFSET: 53.30 LT

SANITARY SEWER LIFT STATION.
SEE SHEET C-05 FOR DETAILS.

SEE NOTE 4

INSTALL FIRE HYDRANT ASSEMBLY
STA: 14+80.06
OFFSET: 28.49 LT

SEE NOTE 10

10"X8" HDPE REDUCER
STA: 14+74.00
OFFSET: 24.09 LT

SEE NOTE 3

CAP SEWER SERVICE
LINE AT MAIN LINE WYE
AND REMOVE EXISTING
SERVICE LINE

45° BEND
STA: 14+40.59
OFFSET: 6.00 RT

SEE NOTE 4

REMOVE AND RECONSTRUCT
EXISTING LANDSCAPING AS
NECESSARY FOR UNDERGROUND
UTILITY INSTALLATION

SEE NOTE 3

SEE NOTE 10

SEE NOTE 4

REMOVE AND RECONSTRUCT
EXISTING LANDSCAPING AS
NECESSARY FOR UNDERGROUND
UTILITY INSTALLATION

SEE NOTE 3

SEE NOTE 3

INSULATE NEW WATER
LINE PER CBJ STD 412

REMOVE EXISTING
FIRE HYDRANT

SEE NOTE 3

SEE NOTE 4

HEADWALL
STA: 13+29.86
OFFSET: 26.82 LT
INV. EL.: 24.50

INSTALL 5'X10' SHOT ROCK APRON
(MEETING REQUIREMENTS OF SHOT
ROCK BORROW), GRADE TO DRAIN
WITHIN DRAINAGE EASEMENT

WOODEN
DRIVEWAY

PROTECT AND
MAINTAIN ELEVATED
WOODEN DRIVEWAY

INSTALL SEWER SERVICE LATERAL
AND CLEANOUT (6" PVC)

MISTY LANE

13+00 13+50 14+00 14+50 15+00

10" HDPE WATERLINE

6" DIP

12" CPP

8" PVC

10.5" CMP

4" C900 FM

CONCRETE DRIVEWAY

GRAVEL DRIVEWAY

S-2	TYPE I SDMH*
STA: 13+29.42	OFF: 14.00 RT
FRAME EL=	29.49
P-4	25.85
P-5	24.66
P-6	24.56
6" UD	25.95
*OIL-WATER SEPARATOR PER CBJ STD 305	

S-1	TYPE III CB
STA: 13+95.38	OFF: 16.79 RT
FRAME EL=	27.14
P-5	24.99
6" UD	25.09

HEINZ & VALERIA
BUSCHFORT
10644 MISTY LANE

JAMES & PEGGY
PETROPULOS
10648 MISTY LANE

ROSEMARIE DURAN
10656 MISTY LANE

BERNARD & NICOLE AUTH
10652 MISTY LANE

10 0 10 20
SCALE IN FEET

SHEET NOTES:

1. PIPE LENGTHS ARE TO CENTER OF STRUCTURE. PIPE SLOPES ARE MEASURED TO ENDS OF PIPES.
2. STORM DRAIN STRUCTURES STATION AND OFFSET ARE GIVEN TO THE CENTER OF THE STRUCTURE. LID ELEVATION IS GIVEN TO CENTER OF STRUCTURE. FRAME ELEVATION IS GIVEN TO THE TOP, FRONT OF FRAME.
3. INSTALL NEW WATER SERVICE, SEE SUMMARY ON SHEET C-06.
4. INSTALL NEW SEWER SERVICE CLEANOUT, SEE SUMMARY ON SHEET C-06.
5. PROVIDE ALL PIPE EXTENSIONS, ADAPTERS, ELBOWS AND OTHER FITTINGS NECESSARY TO CONNECT TO DISSIMILAR PIPE SIZES, MATERIALS, AND DEPTHS.
6. HDPE PIPE DEFLECTIONS SHALL NOT EXCEED PIPE MANUFACTURERS RECOMMENDATIONS.
7. SEE STANDARD SPECIFICATIONS, ERRATAS AND SPECIAL PROVISION SECTION 02601 WATER PIPE FOR WATERLINE INSTALLATION FOR TESTING, DISINFECTION & INSTALLATION REQUIREMENTS.
8. ALL LOCATIONS WHERE STORM DRAIN PIPES CROSS WATERLINES, THE STORM DRAIN PIPE SHALL BE PRESSURE TESTED.
9. MAINTAIN 18" MINIMUM VERTICAL SEPARATION BETWEEN PROPOSED WATER PIPE AND ALL STORM OR SANITARY SEWER PIPE CROSSINGS.
10. BACKFILL ABANDONED CUL-DE-SAC DITCHES WITH USABLE EXCAVATION. PLACE AND COMPACT MAX 12 INCH THICK LIFTS TO SATISFACTION OF THE ENGINEER.

STATE OF ALASKA
49 TH
LUCAS M. CHAMBERS
1/31/2022
CE 106593
REGISTERED PROFESSIONAL ENGINEER

RECORD OF REVISIONS

No.	DATE	DESCRIPTION	BY

proHNS LLC
CERTIFICATE OF AUTHORIZATION #100662

DRAWN BY:	E. ROEMELING
DESIGNED BY:	E. ROEMELING
CHECKED BY:	L. CHAMBERS

1945 ALEX HOLDEN WAY #101
JUNEAU, AK 99801
(907) 780-4004
solutions@proHNS.com
www.proHNS.com

CITY AND BOROUGH OF JUNEAU
ALASKA'S CAPITAL CITY
ENGINEERING & PUBLIC WORKS

MISTY LANE
RECONSTRUCTION
BE22-217

PLAN - 12+60 TO EOP

SHEET NUMBER
C-08
OF
24

January 31, 2022
C:\Users\Ethan Roemeling\Dropbox (proHNS)\Projects\Juneau\CBJ Misty Lane\C3D Misty Lane\Sheets\Misty Ln_PLAN.dwg

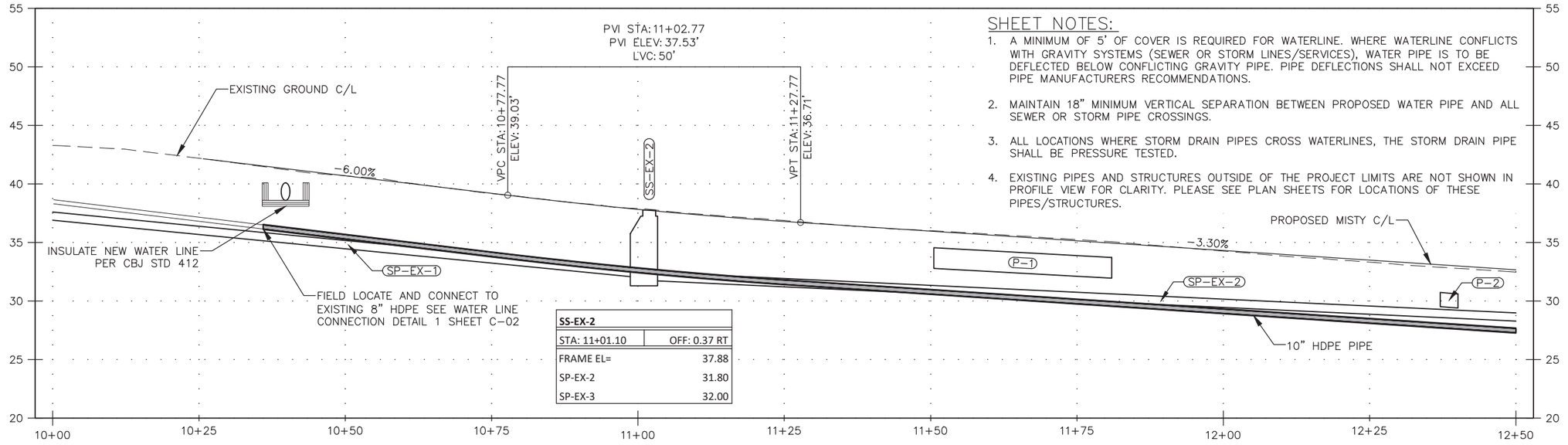

SS-EX-2	
STA: 11+01.10	OFF: 0.37 RT
FRAME EL=	37.88
SP-EX-2	31.80
SP-EX-3	32.00

SHEET NOTES:

1. A MINIMUM OF 5' OF COVER IS REQUIRED FOR WATERLINE. WHERE WATERLINE CONFLICTS WITH GRAVITY SYSTEMS (SEWER OR STORM LINES/SERVICES), WATER PIPE IS TO BE DEFLECTED BELOW CONFLICTING GRAVITY PIPE. PIPE DEFLECTIONS SHALL NOT EXCEED PIPE MANUFACTURERS RECOMMENDATIONS.
2. MAINTAIN 18" MINIMUM VERTICAL SEPARATION BETWEEN PROPOSED WATER PIPE AND ALL SEWER OR STORM PIPE CROSSINGS.
3. ALL LOCATIONS WHERE STORM DRAIN PIPES CROSS WATERLINES, THE STORM DRAIN PIPE SHALL BE PRESSURE TESTED.
4. EXISTING PIPES AND STRUCTURES OUTSIDE OF THE PROJECT LIMITS ARE NOT SHOWN IN PROFILE VIEW FOR CLARITY. PLEASE SEE PLAN SHEETS FOR LOCATIONS OF THESE PIPES/STRUCTURES.

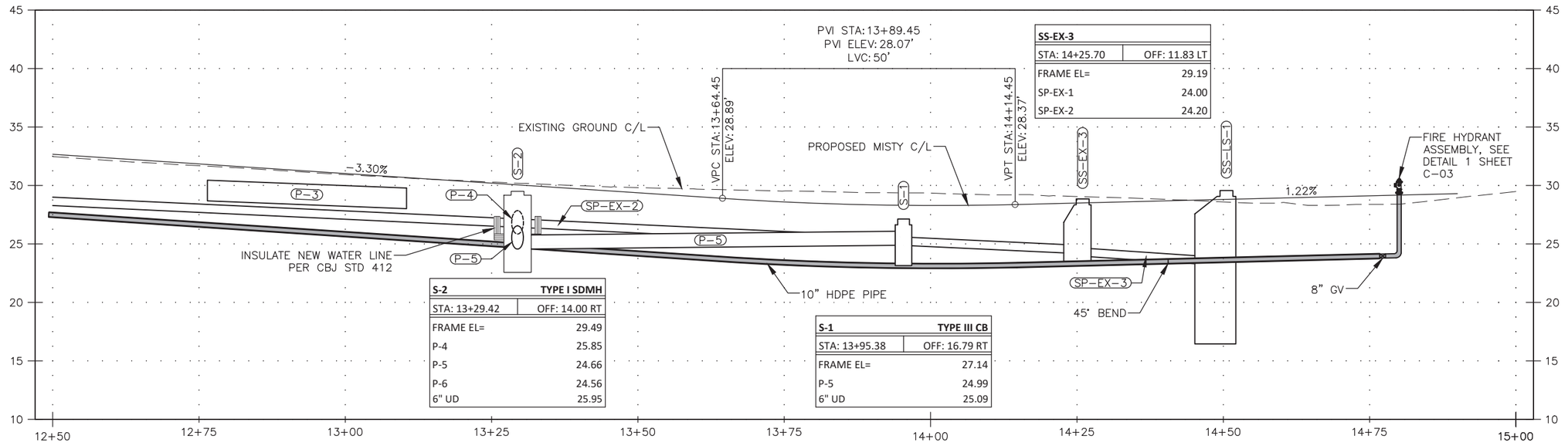

S-2	TYPE I SDMH
STA: 13+29.42	OFF: 14.00 RT
FRAME EL=	29.49
P-4	25.85
P-5	24.66
P-6	24.56
6" UD	25.95

S-1	TYPE III CB
STA: 13+95.38	OFF: 16.79 RT
FRAME EL=	27.14
P-5	24.99
6" UD	25.09

SS-EX-3	
STA: 14+25.70	OFF: 11.83 LT
FRAME EL=	29.19
SP-EX-1	24.00
SP-EX-2	24.20

STATE OF ALASKA 49TH
LUCAS M. CHAMBERS
1/31/2022
CE 106593
REGISTERED PROFESSIONAL ENGINEER

RECORD OF REVISIONS

No.	DATE	DESCRIPTION	BY

proHNS LLC
CERTIFICATE OF AUTHORIZATION #100662
1945 ALEX HOLDEN WAY #101
JUNEAU, AK 99801
(907) 780-4004
solutions@proHNS.com
www.proHNS.com

DRAWN BY:	E. ROEMELING
DESIGNED BY:	E. ROEMELING
CHECKED BY:	L. CHAMBERS

CITY AND BOROUGH OF JUNEAU
ALASKA'S CAPITAL CITY
ENGINEERING & PUBLIC WORKS

MISTY LANE RECONSTRUCTION

BE22-217

PROFILE - BOP TO EOP

SHEET NUMBER
C-09
OF
24

January 31, 2022 C:\Users\Ethan Roemeling\Dropbox (proHNS)\Projects\Juneau\CBJ Misty Lane\C3D Misty Lane\Sheets\Misty Ln_PROFILE.dwg

HORIZON DRIVE

JAMES & PEGGY
PETROPULOS
10641 MISTY LANE

MISTY LANE

CHRISTINA & JOSHUA
SIMONSON
10638 HORIZON DRIVE

GERALD & PAMELA
RACE
10640 MISTY LANE

HEINZ & VALERIA
BUSCHFORT
10644 MISTY LANE

BOP "MISTY LN" 10+00.00
N: 10206.86
E: 50173.99

STA: 10+25.68 – 17.00' LT
EL=42.26'± MTE

STA: 10+25.68 – 20.25' RT
EL=42.39'± MTE

STA: 10+39.25 – 13.00' LT
EL=40.96' TP

STA: 10+50.29 – 13.00' LT
EL=40.29' TP

STA: 10+77.76 – 13.00' LT
EL=38.64' TP

VPC STA: 10+77.76
39.03' TP

STA: 11+27.77 – 13.00' LT
EL=36.32' TP

STA: 11+62.35 – 13.00' LT
EL=35.18' TP

PC: 10+50.29

PT: 11+62.35

VPT STA: 11+27.77
36.71' TP

STA: 10+47.00 – 13.00' RT
EL=41.27' TP

STA: 10+50.29 – 13.00' RT
EL=41.09' TP

STA: 10+77.76 – 13.00' RT
EL=39.23' TP

STA: 10+84.96 – 13.00' RT
EL=38.62' TP

STA: 10+97.47 – 13.00' RT
EL=37.56' TP

STA: 11+27.77 – 13.00' RT
EL=36.32' TP

STA: 11+62.35 – 13.00' RT
EL=35.18' TP

N28° 11' 45"W

N71° 00' 00"W

SAWCUT & MTE

R35'

R163'

-0.35%
-6.00%
-3.00%
-1.00%
-6.00%
-3.00%
-3.00%
-3.00%
-4.69%
-3.00%
-3.00%
-3.00%
-3.30%
-3.00%
-3.30%
-3.00%
-3.30%
-4.99%
-3.10%
-3.00%
0.00%
-3.00%
-7.79%
-7.74%
-4.10%

10+00
10+50
11+00
11+50
12+00
12+50

SHEET NOTES:

1. SEE TYPICAL SHEET C-01 FOR ADDITIONAL GRADING INFORMATION. SEE SHEET C-09 FOR CENTERLINE PROFILE INFORMATION.
2. STATIONS, OFFSETS, ELEVATIONS AND CURVE INFORMATION ALONG . ROADWAY ARE PROVIDED AT TOP OF PAVEMENT (TP).
3. SLOPES SHOWN ARE FOR FINISHED PAVEMENT.
4. PAVING LIMITS AT DRIVEWAYS TO EXTEND 2' FROM EDGE OF ROADWAY AND INCLUDE 10' RADIUS FLARE.

STATE OF ALASKA 49TH
LUCAS M. CHAMBERS
1/31/2022
CE 10659
REGISTERED PROFESSIONAL ENGINEER

RECORD OF REVISIONS

No.	DATE	DESCRIPTION	BY

proHNS LLC
CERTIFICATE OF AUTHORIZATION #100662

1945 ALEX HOLDEN WAY #101
JUNEAU, AK 99801
(907) 780-4004
solutions@proHNS.com
www.proHNS.com

DRAWN BY:	E. ROEMELING
DESIGNED BY:	E. ROEMELING
CHECKED BY:	L. CHAMBERS

CITY AND BOROUGH OF JUNEAU
ALASKA'S CAPITAL CITY
ENGINEERING & PUBLIC WORKS

MISTY LANE RECONSTRUCTION

BE22-217

GRADING - BOP TO 12+60

SHEET NUMBER
C-10
OF
24

January 31, 2022 C:\Users\Ethan Roemeling\Dropbox (proHNS)\Projects\Juneau\CBJ Misty Lane\C3D Misty Lane\Sheets\Misty Ln_GRADING.dwg

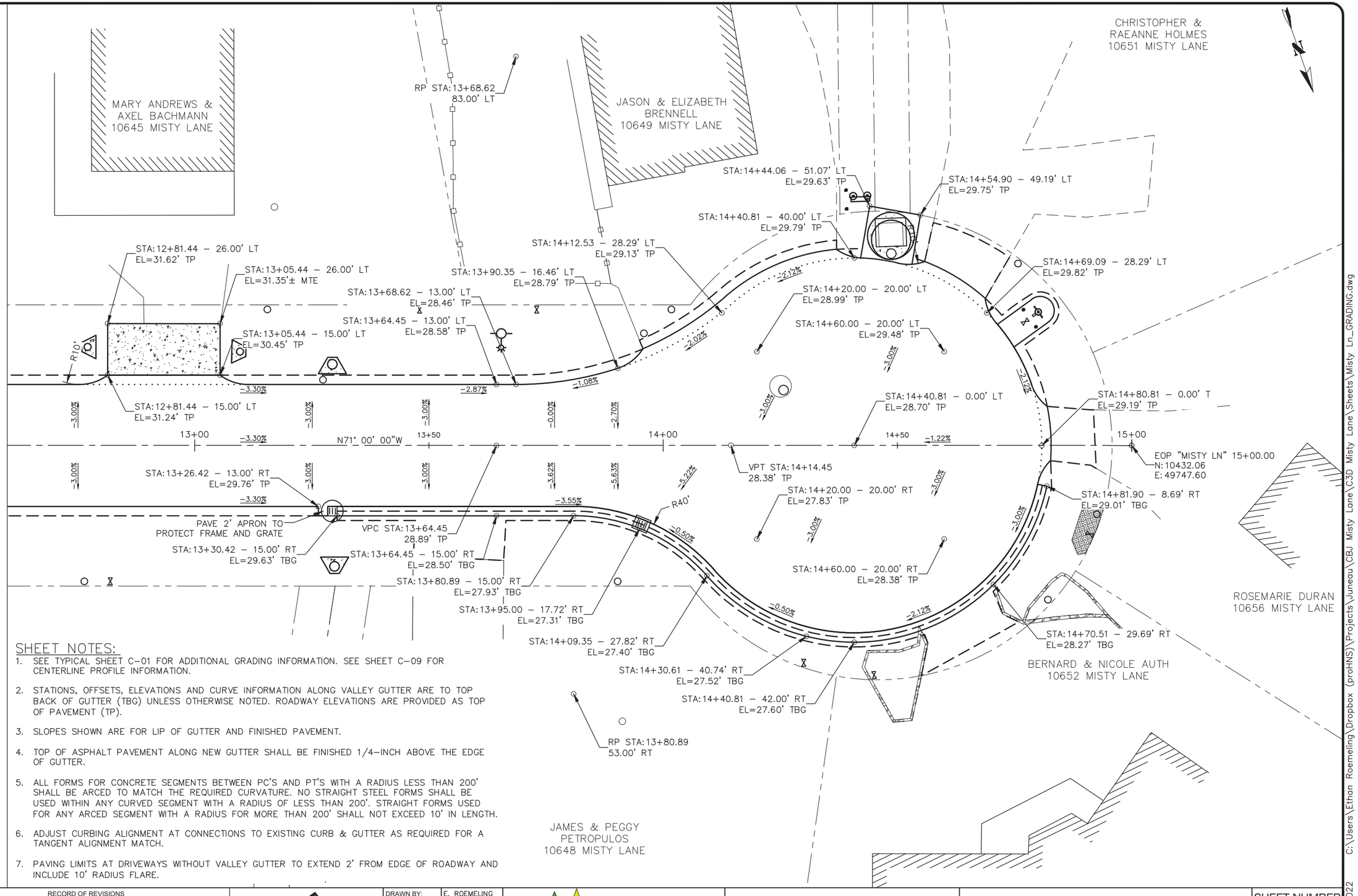

SHEET NOTES:

1. SEE TYPICAL SHEET C–01 FOR ADDITIONAL GRADING INFORMATION. SEE SHEET C–09 FOR CENTERLINE PROFILE INFORMATION.
2. STATIONS, OFFSETS, ELEVATIONS AND CURVE INFORMATION ALONG VALLEY GUTTER ARE TO TOP BACK OF GUTTER (TBG) UNLESS OTHERWISE NOTED. ROADWAY ELEVATIONS ARE PROVIDED AS TOP OF PAVEMENT (TP).
3. SLOPES SHOWN ARE FOR LIP OF GUTTER AND FINISHED PAVEMENT.
4. TOP OF ASPHALT PAVEMENT ALONG NEW GUTTER SHALL BE FINISHED 1/4–INCH ABOVE THE EDGE OF GUTTER.
5. ALL FORMS FOR CONCRETE SEGMENTS BETWEEN PC'S AND PT'S WITH A RADIUS LESS THAN 200' SHALL BE ARCED TO MATCH THE REQUIRED CURVATURE. NO STRAIGHT STEEL FORMS SHALL BE USED WITHIN ANY CURVED SEGMENT WITH A RADIUS OF LESS THAN 200'. STRAIGHT FORMS USED FOR ANY ARCED SEGMENT WITH A RADIUS FOR MORE THAN 200' SHALL NOT EXCEED 10' IN LENGTH.
6. ADJUST CURBING ALIGNMENT AT CONNECTIONS TO EXISTING CURB & GUTTER AS REQUIRED FOR A TANGENT ALIGNMENT MATCH.
7. PAVING LIMITS AT DRIVEWAYS WITHOUT VALLEY GUTTER TO EXTEND 2' FROM EDGE OF ROADWAY AND INCLUDE 10' RADIUS FLARE.

STATE OF ALASKA 49TH
LUCAS M. CHAMBERS
1/31/2022
CE 10659
REGISTERED PROFESSIONAL ENGINEER

RECORD OF REVISIONS

No.	DATE	DESCRIPTION	BY

proHNS LLC
CERTIFICATE OF AUTHORIZATION #100662

DRAWN BY:	E. ROEMELING
DESIGNED BY:	E. ROEMELING
CHECKED BY:	L. CHAMBERS

1945 ALEX HOLDEN WAY #101
JUNEAU, AK 99801
(907) 780-4004
solutions@proHNS.com
www.proHNS.com

CITY AND BOROUGH OF JUNEAU
ALASKA'S CAPITAL CITY
ENGINEERING & PUBLIC WORKS

MISTY LANE RECONSTRUCTION
BE22-217

GRADING - 12+60 TO EOP

SHEET NUMBER
C-11
OF
24

January 31, 2022 C:\Users\Ethan Roemeling\Dropbox (proHNS)\Projects\Juneau\CBJ Misty Lane\C3D Misty Ln_GRADING.dwg

EXISTING

MARY ANDREWS &
AXEL BACHMANN
10645 MISTY LANE

JASON & ELIZABETH
BRENNELL
10649 MISTY LANE

CHRISTOPHER &
RAEANNE HOLMES
10651 MISTY LANE

DEMOLISH EXISTING CONCRETE LIGHT POLE, CONDUCTORS AND DISPOSE.

DEMOLISH EXISTING METER AND DISPOSE. REUSE / EXTEND UTILITY CONDUIT.

DEMOLISH EXISTING CONDUIT, CONDUCTORS AND DISPOSE.

EXISTING LIFT STATION SEE NOTE #2

MISTY LANE

WOODEN DRIVEWAY

GRAVEL DRIVEWAY

ROSEMARIE DURAN
10656 MISTY LANE

BERNARD & NICOLE AUTH
10652 MISTY LANE

HEINZ & VALERIA
BUSCHFORT
10644 MISTY LANE

JAMES & PEGGY
PETROPULOS
10648 MISTY LANE

10 0 10 20
SCALE IN FEET

SHEET NOTES:

1. COORDINATE WITH OWNER ON DEMOLITION AND REMOVAL OF EXISTING ITEMS.
2. DISCONNECT AND REMOVE ALL CONDUCTORS, PUMP WIRING, LEVEL SENSORS, AND WET WELL FLOATS FROM EXISTING LIFT STATION. TAKE CARE NOT TO DAMAGE LIFT STATION COMPONENTS WHEN PERFORMING WORK. OWNER TO SALVAGE EXISTING LIFT STATION CONTROL PANEL, INSTRUMENTS AND ANCILLARY ITEMS.

STATE OF ALASKA 49TH
Blake Rider 1/31/2022
Blake Rider
No. EE-114174
REGISTERED PROFESSIONAL ENGINEER

RECORD OF REVISIONS

No.	DATE	DESCRIPTION	BY

RMC engineering
Douglas, Alaska
(907) 419-5476
www.rmces.com

DRAWN BY:	BSR
DESIGNED BY:	BSR
CHECKED BY:	VAM

CITY AND BOROUGH OF JUNEAU
ALASKA'S CAPITAL CITY

MISTY LANE
RECONSTRUCTION
BE22-217

ELECTRICAL SITE PLAN - EXISTING

SHEET NUMBER
E-01
OF
24

January 31, 2022

NEW

MARY ANDREWS &
AXEL BACHMANN
10645 MISTY LANE

JASON & ELIZABETH
BRENNELL
10649 MISTY LANE

CHRISTOPHER &
RAEANNE HOLMES
10651 MISTY LANE

BOLLARDS
TYPICAL (2EA)

EQUIPMENT RACK
SEE NOTE #2

EXISTING METER AND
NEW CONDUIT
NOTE #1

NOTE #4

NEW LIFT STATION
SEE NOTE #3

NEW LIGHT POLE,
BASE AND FIXTURE.

NEW DISCONNECT
SEE NOTE #5

NEW TYPE 1A
JUNCTION BOX

MISTY LANE

CONCRETE
DRIVEWAY

WOODEN
DRIVEWAY

GRAVEL
DRIVEWAY

ROSEMARIE DURAN
10656 MISTY LANE

BERNARD & NICOLE AUTH
10652 MISTY LANE

HEINZ & VALERIA
BUSCHFORT
10644 MISTY LANE

JAMES & PEGGY
PETROPULOS
10648 MISTY LANE

10 0 10 20
SCALE IN FEET

SHEET NOTES:

1. COORDINATE WITH UTILITY TO EXTEND SERVICE CONDUCTORS AND CONDUIT AS NEEDED. PROVIDE NEW STAINLESS STEEL 120/240VAC, 100A, 1ϕ METER ON NEW EQUIPMENT RACK. MILBANK U214MTB–SS–NKO OR APPROVED EQUAL.
2. INSTALL NEW EQUIPMENT RACK. COORDINATE WITH UTILITY AND CIVIL ON NEW STAND LOCATION. MOUNT COMMUNICATIONS CONTROL PANEL AND NEW NEMA 3R, STAINLESS STEEL METER DISCONNECT COMBO ON STAND. SEE SHEET E–05 FOR RACK DETAILS.
3. INSTALL AND TERMINATE NEW FEEDERS, INSTALL AND TERMINATE COMMUNICATION CABLE, INSTALL RADAR LEVEL SENSOR AND WET WELL FLOATS AND TERMINATE PUMP LEADS AS REQUIRED IN NEW LIFT STATION PANEL. LIFT STATION CONTROL PANEL, PUMPS, FLOATS AND LEVEL SENSOR PROVIDED BY OTHERS. SEE SHEET E–04 FOR COMMUNICATION CABLE REQUIREMENTS. COORDINATE WITH OWNER AND LIFT STATION MANUFACTURER.
4. (1 EA) 1–1/4"C. POWER FROM SERVICE TO LIFT STATION CONTROL PANEL.
   (2 EA) 1"C. POWER AND COMMUNICATION FROM LIFT STATION CONTROL PANEL TO COMMUNICATION PANEL. ALL ABOVE GRADE CONDUIT SHALL BE GALVANIZED RIGID STEEL. SCHEDULE 40 PVC CONDUITS FOR UNDERGROUND IS ALLOWED.
5. INSTALL HEAVY DUTY FUSED STAINLESS STEEL DISCONNECT. SQUARE D H221DS OR APPROVED EQUAL. MOUNT TO 4X4 GALVANIZED POST. MINIMUM 18" SONOTUBE. SAKRETE OR CONCRETE ACCEPTABLE. COORDINATE WITH UTILITY TO PROVIDE 240VAC, 1ϕ SERVICE TO DISCONNECT. CONTRACTOR TO INSTALL CONDUIT AND CONDUCTORS FROM DISCONNECT TO LIGHT POLE BASE. SEE SHEET E–03.

STATE OF ALASKA 49TH
Blake Rider 1/31/2022
Blake Rider
No. EE-114174
REGISTERED PROFESSIONAL ENGINEER

RECORD OF REVISIONS

No.	DATE	DESCRIPTION	BY

RMC engineering

Douglas, Alaska
(907) 419-5476

www.rmces.com

DRAWN BY:	BSR
DESIGNED BY:	BSR
CHECKED BY:	VAM

CITY AND BOROUGH OF JUNEAU
ALASKA'S CAPITAL CITY

MISTY LANE
RECONSTRUCTION

BE22-217

ELECTRICAL SITE PLAN - NEW

SHEET NUMBER
E-02
OF
24

January 31, 2022

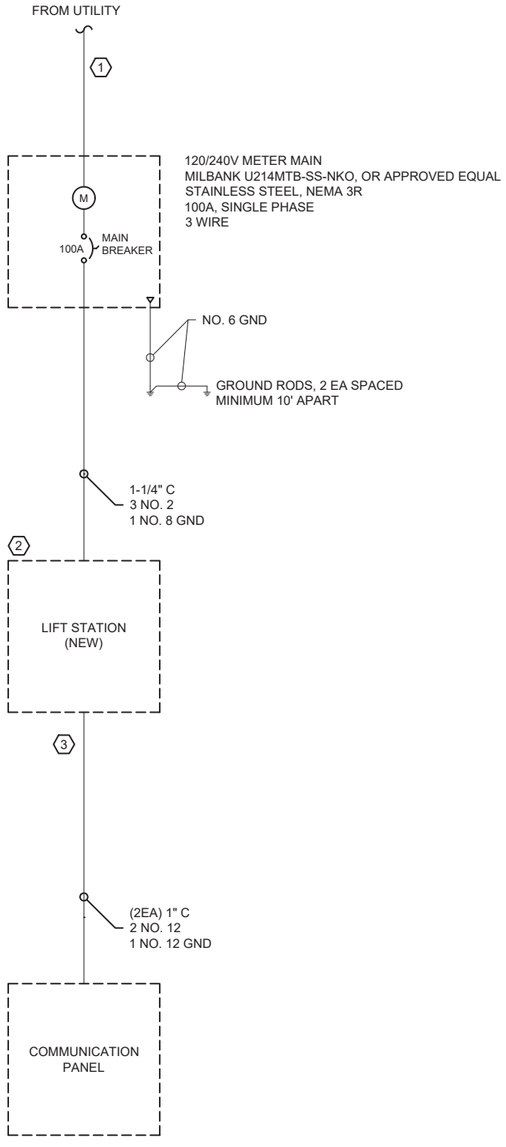

1 LIFT STATION ONE LINE

LEGEND AND ABBREVIATIONS:

	GROUND ROD	C	CONDUIT
	GROUND BUS	GND	GROUND
M	METER	LP	LIGHT POLE
	FUSED DISCONNECT		
	CIRCUIT BREAKER		

NOTES:

1. FIELD LOCATE EXISTING CONDUIT AND EXTEND UNDERGROUND SERVICE CONDUCTORS. COORDINATE WITH UTILITY.
2. PACKAGED LIFT STATION, INCLUDING: CONTROL PANEL, METERS, SENSORS, LIGHTING, HEATER, BLOWER AND ALARMS TO BE PES MODEL 183 B PUMPTECH OR APPROVED EQUAL.
3. COMMUNICATION PANEL POWERED FROM SPARE OUTLET IN NEW LIFT STATION. COORDINATE WITH PUMP MANUFACTURER.

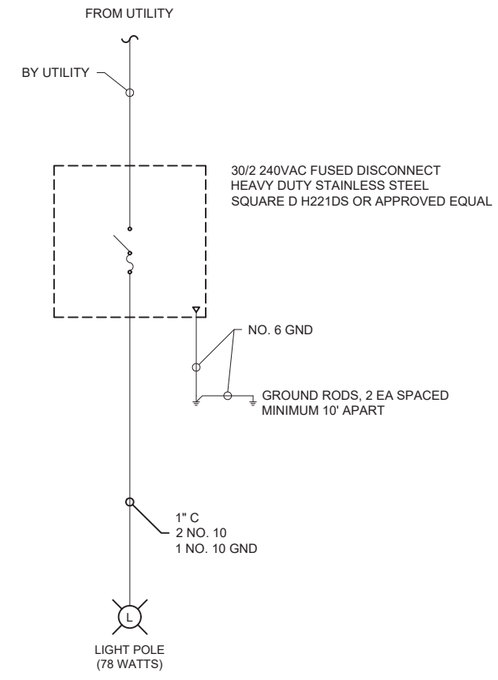

2 LIGHT POLE ONE LINE

STATE OF ALASKA
Blake Rider
No. EE-114174
REGISTERED PROFESSIONAL ENGINEER
Blake Rider 1/21/2022

RECORD OF REVISIONS			
No.	DATE	DESCRIPTION	BY

RMC engineering

DRAWN BY:	BSR
DESIGNED BY:	BSR
CHECKED BY:	VAM

Douglas, Alaska
(907) 419-5476

www.rmces.com

CITY AND BOROUGH OF JUNEAU
ALASKA'S CAPITAL CITY

MISTY LANE
RECONSTRUCTION

BE22-217

ONE LINE DIAGRAM

SHEET NUMBER
E-03
OF
24

January 31, 2022

1 COMMUNICATION PANEL

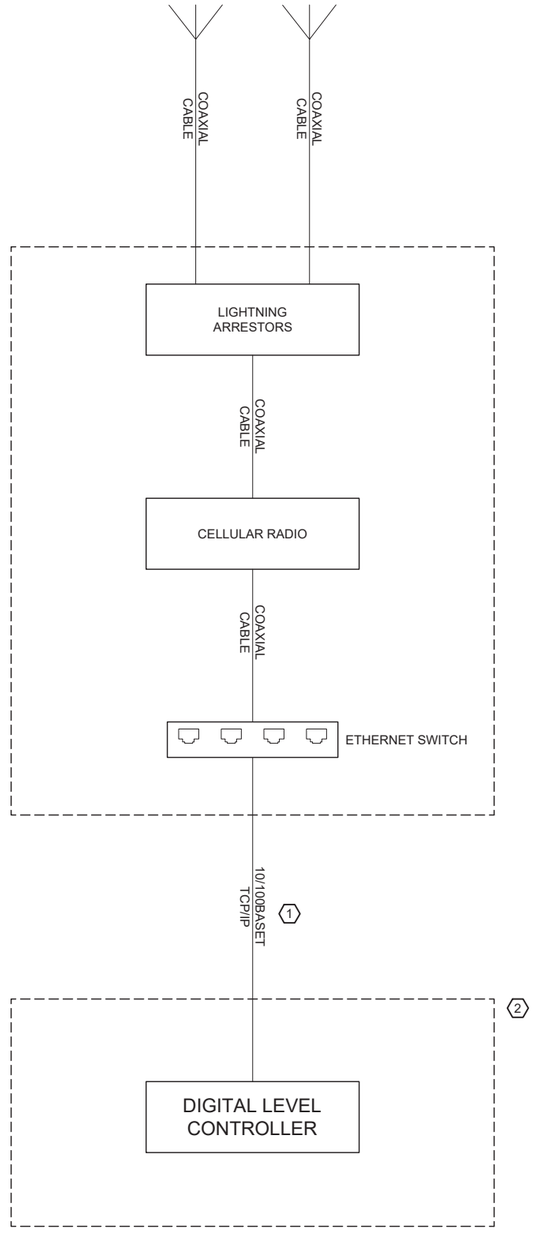

2 LIFT STATION CONTROL PANEL

NOTES:

1. RUN OUTDOOR, DIRECT BURIAL, 600V CAT5E BETWEEN COMMUNICATION PANEL AND LIFT STATION CONTROL PANEL. REFER TO SHEET E-03 FOR CONDUIT SIZE.
2. PACKAGED LIFT STATION, INCLUDING: CONTROL PANEL, METERS, SENSORS, LIGHTING, HEATER, BLOWER AND ALARMS TO BE PES MODEL 183 B PUMPTECH OR APPROVED EQUAL.

STATE OF ALASKA
Blake Rider 1/21/2022
Blake Rider
No. EE-114174
REGISTERED PROFESSIONAL ENGINEER

RECORD OF REVISIONS			
No.	DATE	DESCRIPTION	BY

RMC engineering
Douglas, Alaska
(907) 419-5476
www.rmces.com

DRAWN BY:	BSR
DESIGNED BY:	BSR
CHECKED BY:	VAM

CITY AND BOROUGH OF JUNEAU
ALASKA'S CAPITAL CITY

MISTY LANE RECONSTRUCTION

BE22-217

NETWORK SCHEMATIC

SHEET NUMBER
E-04
OF
24

January 31, 2022

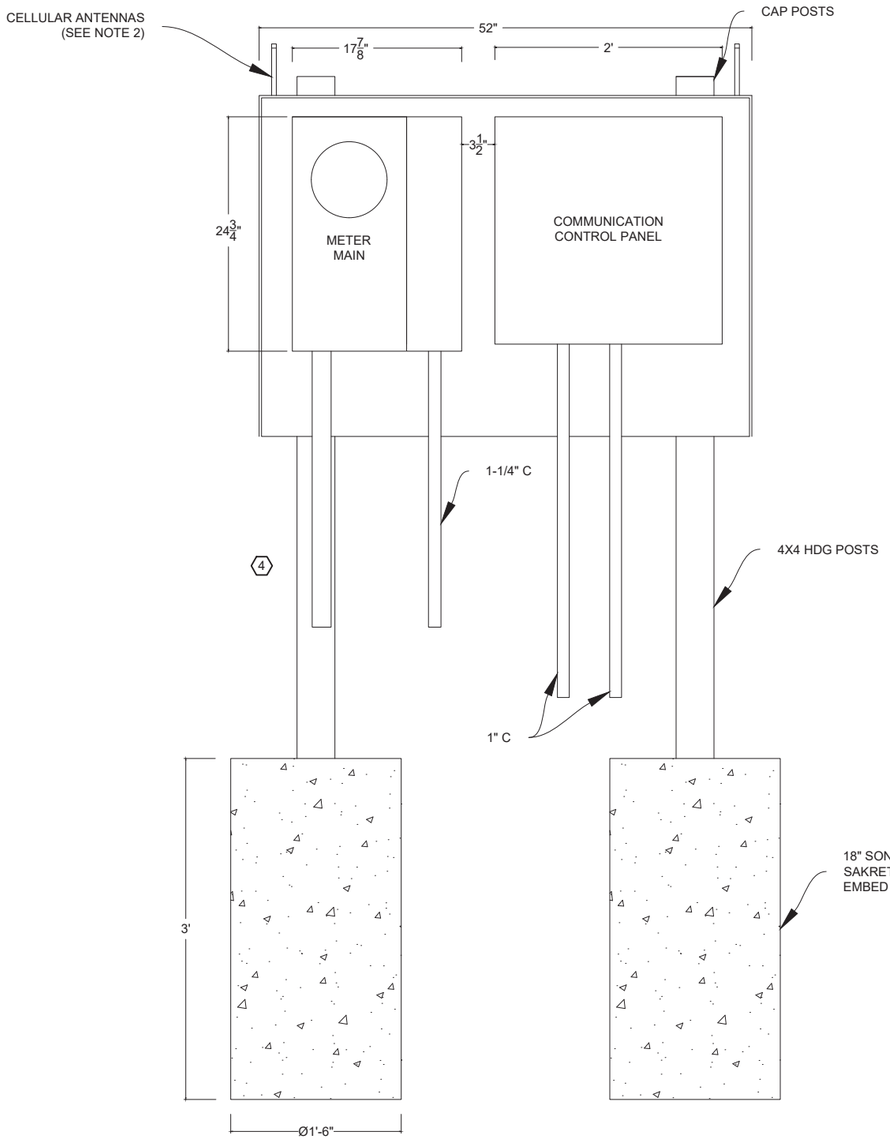

1 EQUIPMENT RACK - FRONT VIEW

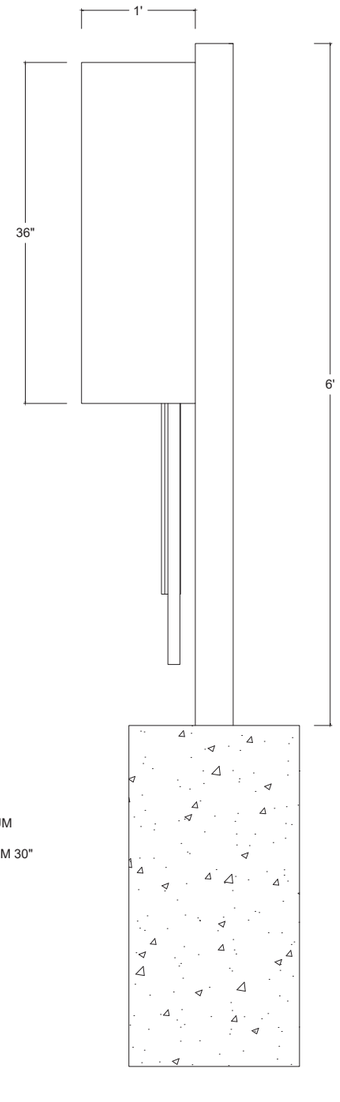

2 EQUIPMENT RACK - SIDE VIEW

NOTES:

1. 3-SIDED ENCLOSURE AND BACKPANEL. USE 1/4" ALUMINIMUM WELDED PANELS ALL SIDES.
2. BULKHEAD MOUNT ANTENNAS THROUGH TOP PANEL. SPACE MINIMUM 36" APART. RUN COAXIAL CABLE FROM ANTENNAS TO LIGHTING ARRESTORS IN COMMUNICATIONS PANEL.
3. ALL ABOVE GRADE CONDUIT SHALL BE GALVANIZED RIGID STEEL. UNDERGROUND CONDUITS SCHEDULE 40 PVC ALLOWED.
4. FELD LOCATE AND EXTEND EXISTING CONDUIT AND SERVICE CONDUCTORS. COORDINATE WITH UTILITY.

STATE OF ALASKA
49TH
Blake Rider 1/31/2022
Blake Rider
No. EE-114174
REGISTERED PROFESSIONAL ENGINEER

RECORD OF REVISIONS			
No.	DATE	DESCRIPTION	BY

RMC engineering

Douglas, Alaska
(907) 419-5476

www.rmces.com

DRAWN BY:	BSR
DESIGNED BY:	BSR
CHECKED BY:	VAM

CITY AND BOROUGH OF JUNEAU
ALASKA'S CAPITAL CITY

MISTY LANE
RECONSTRUCTION

BE22-217

EQUIPMENT RACK

SHEET NUMBER
E-05
OF
24

January 31, 2022

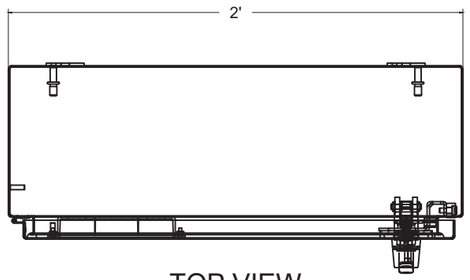

TOP VIEW

Item	Part #	Description	Manufacturer
1	A24H2408SSLP3PT	Stainless Steel Enclosure	Hoffman
2	A24P24	Backpanel	Hoffman
3	CMFKSS	Mounting Feet	Hoffman
4	800886	Terminal Block End Clamp	Phoenix Contact
5	3044102	Terminal Block	Phoenix Contact
6	3044128	Ground Terminal Block	Phoenix Contact
7	FAZ-C5-1-NA-SP	Circuit Breakers	Eaton
8	PSM24-090S	24VDC Power Supply	Rhino
9	2891152	Ethernet Switch	Phoenix Contact
10	DAH1001A	100W Electric Heater	Hoffman
11	415-0033-M2.0	SMA to SMA Coaxial Cable	Johnson-Cinch
12	GAS-6G-SM A	Lightning Suppressor	TerraWave
13	1103052	4G/LTE Cellular Radio	Sierra Wireless
14	CJA-SM-NM-UFX400-20	Coaxial Cable	USAT
15	PY-M-BNF00-08W-00	Cellular Antennas	Poynting

NOTES:

1. QUANTITY AS REQUIRED.
2. ANTENNAS TO BE MOUNTED AS SHOWN ON SHEET E-05.
3. CONTROL PANEL MANUFACTURER SHALL PERFORM SHOP TESTING PRIOR TO INSTALLATION.
4. ALL EXPENSES ASSOCIATED WITH SHOP TESTING SHALL BE COVERED BY CONTROL PANEL MANUFACTURER.
5. CONFIGURATION OF CELLULAR MODEM IS EXCLUDED FROM SCOPE OF WORK.

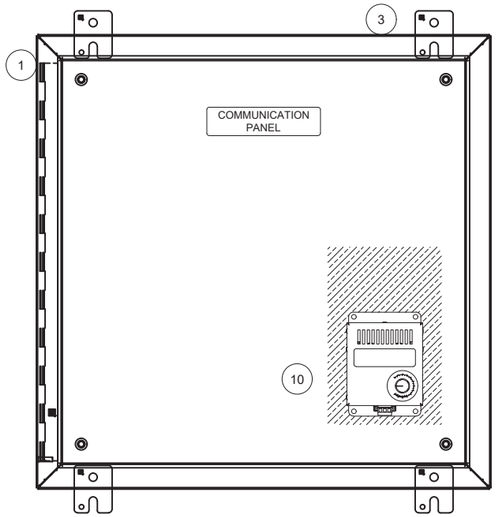

FRONT VIEW

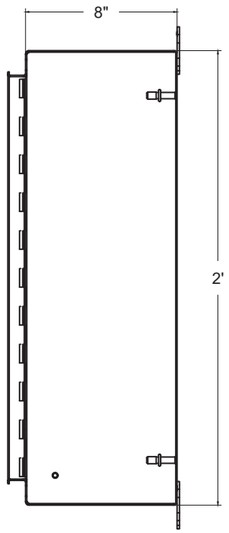

SIDE VIEW

1 COMMUNICATION PANEL - ENCLOSURE

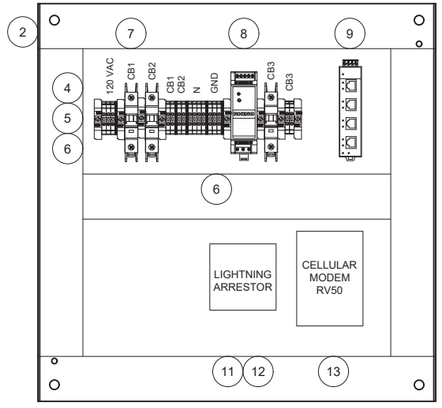

2 COMMUNICATION PANEL - BACKPANEL

STATE OF ALASKA
49TH
Blake Rider
No. EE-114174
REGISTERED PROFESSIONAL ENGINEER

RECORD OF REVISIONS

No.	DATE	DESCRIPTION	BY

RMC engineering
Douglas, Alaska
(907) 419-5476
www.rmces.com

DRAWN BY:	BSR
DESIGNED BY:	BSR
CHECKED BY:	VAM

CITY AND BOROUGH OF JUNEAU
ALASKA'S CAPITAL CITY

MISTY LANE RECONSTRUCTION

BE22-217

COMMUNICATION PANEL - LAYOUT

SHEET NUMBER
E-06
OF
24

January 31, 2022

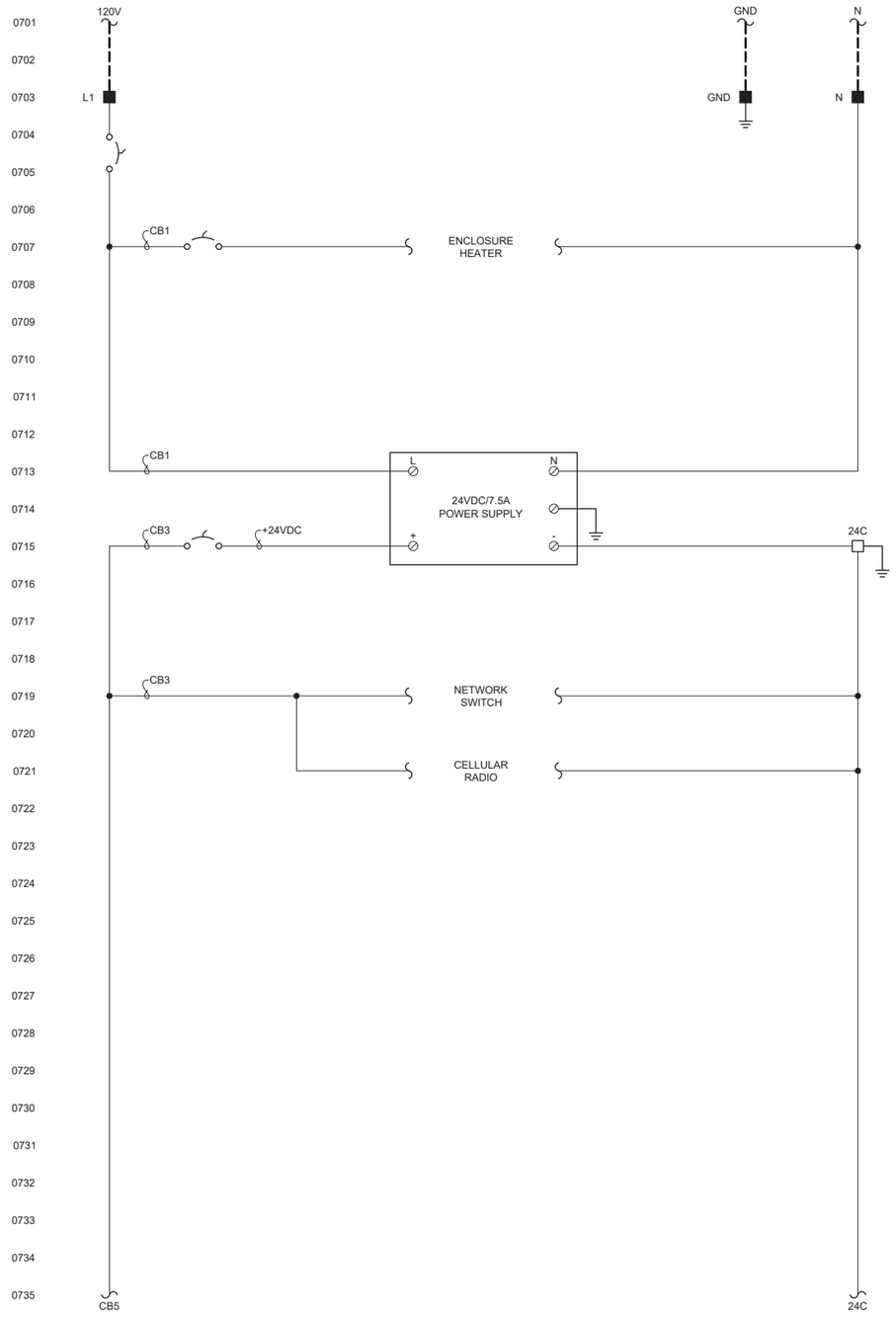

RECORD OF REVISIONS			
No.	DATE	DESCRIPTION	BY

DRAWN BY:	BSR
DESIGNED BY:	BSR
CHECKED BY:	VAM

RMC engineering
Douglas, Alaska
(907) 419-5476
www.rmces.com

CITY AND BOROUGH OF JUNEAU
ALASKA'S CAPITAL CITY

MISTY LANE RECONSTRUCTION

BE22-217

COMMUNICATION PANEL - CONTROL

SHEET NUMBER
E-07
OF
24

January 31, 2022

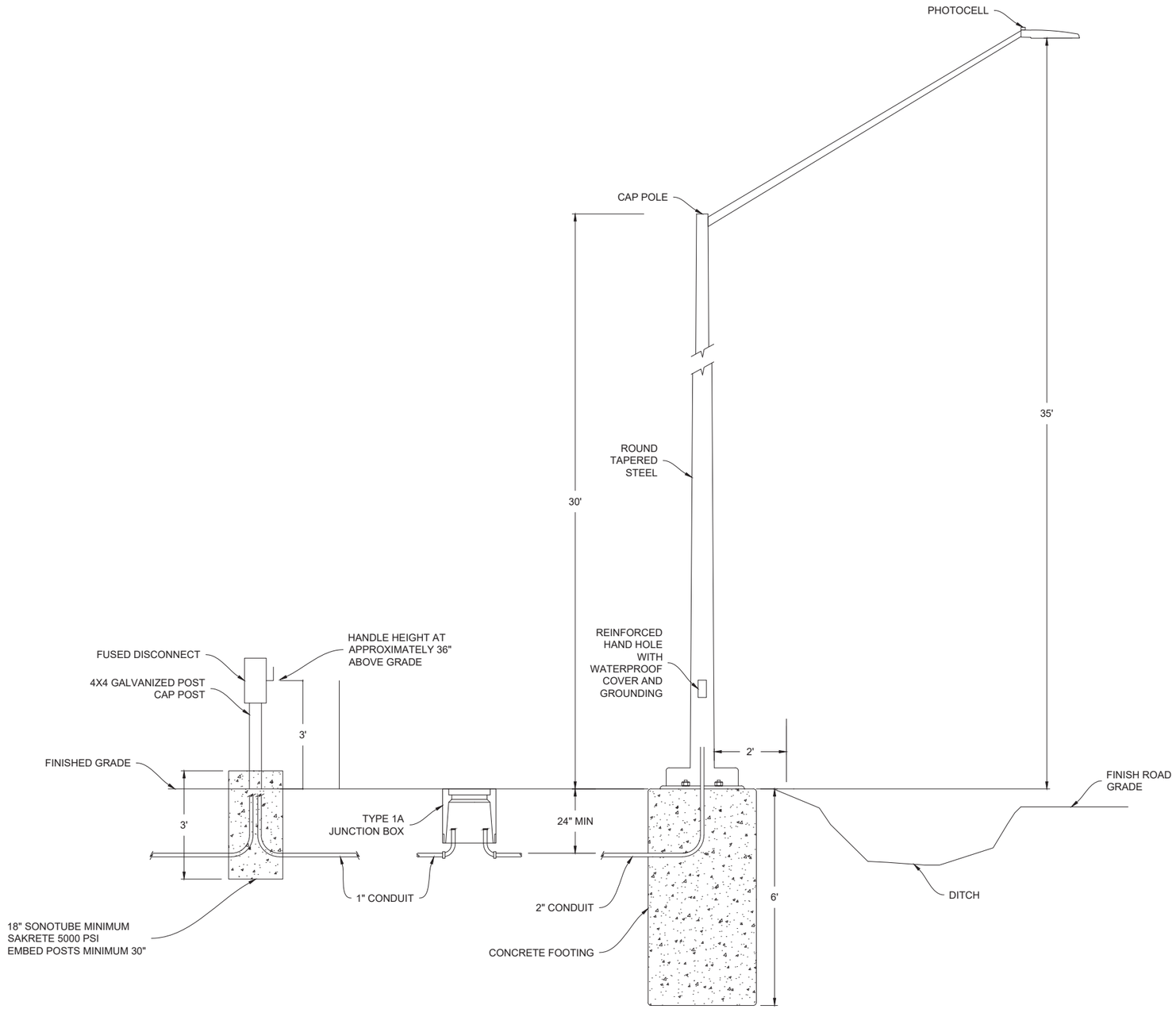

LIGHT POLE

1. LIGHT POLES SHALL BE 30' ROUND TAPERED GALVANIZED STEEL, 10' MAST ARM 5' RISE. VALMONT OR APPROVED EQUAL.
2. DESIGN POLES TO WITHSTAND FORCES EQUIVALENT TO A 110 MPH ISOTACH WIND VELOCITY, WITH A 1.3 GUST FACTOR. AS DEFINED BY THE AASHTO STANDARD SPECIFICATIONS FOR STRUCTURAL SUPPORTS FOR HIGHWAY SIGNS, LUMINARIES AND TRAFFIC SIGNALS". 1994
3. INSTALL UNDERGROUND WIRING BETWEEN LIGHTS IN PVC CONDUIT. ABOVE GROUND CONDUITS SHALL BE GALVANIZED RIGID STEEL.
4. PROVIDE DOUBLE FUSED CONNECTOR KITS WITH FUSES IN THE BASE OF EACH POLE.
5. MATCH EXISTING LIGHT POLE GRADE.

LIGHT FIXTURE

1. BASIS OF DESIGN IS CREE RSW SERIES. PROVIDE CREE RSW SERIES, OR APPROVED EQUAL.
2. PROVIDE PHOTOCELL CONTROL.
3. CONTRACTOR SHALL COORDINATE WITH OWNER AND MANUFACTURER TO PROVIDE COMPLETE LIGHT FIXTURE PART NUMBER.

3.1. RSWM-B-HT-2ME-9L-30K7-UL-GY-N-SS

3.1.1.	PRODUCT:	RSWM	CREE RSW SERIES
3.1.2.	VERSION:	B	
3.1.3.	MOUNTING:	HT	HORIZONTAL TENON
3.1.4.	OPTIC:	2ME	TYPE II MEDIUM
3.1.5.	LUMENS:	9L	
3.1.6.	CCT/CRI:	30K7	3000K, 70CRI
3.1.7.	VOLTAGE:	UL	UNIVERSAL 120-277V
3.1.8.	COLOR:	GY	GRAY
3.1.9.	UTILITY LABEL/RECEPTACLE	N	
3.1.10.	OPTIONS	SS	STAINLESS STEEL BOLTS

4. PROVIDE BACKLIGHT CONTROL SHIELD, PART NUMBER RSW-BLSM, OR APPROVED EQUAL.

1 LIGHT FIXTURE AND POLE DETAIL

STATE OF ALASKA
49TH
Plot Date: 1/31/2022
Blake Rider
No. EE-114174
REGISTERED PROFESSIONAL ENGINEER

RECORD OF REVISIONS

No.	DATE	DESCRIPTION	BY

RMC engineering
Douglas, Alaska
(907) 419-5476
www.rmces.com

DRAWN BY:	BSR
DESIGNED BY:	BSR
CHECKED BY:	VAM

CITY AND BOROUGH OF JUNEAU
ALASKA'S CAPITAL CITY

MISTY LANE
RECONSTRUCTION

BE22-217

LIGHT POLE DETAIL

SHEET NUMBER
E-08
OF
24

January 31, 2022

PRECAST CONCRETE FOOTING DETAIL:

1. FINISH GRADE D-1 OR NATIVE SOILS IF SUITABLE. MUD, PEAT AND ORGANICS NOT ACCEPTABLE.
2. NO. 2 REBAR SPIRAL INSTALLATION. SPIRAL SHALL HAVE 30 INCH DIAMETER WITH 1 TURN EVERY 3 INCHES. MAINTAIN MINIMUM 3" COVER.
3. PROVIDE GALVANIZED ANCHOR BOLTS AND LEVELING NUTS AS RECOMMENDED BY POLE MANUFACTURER. SPACE ANCHOR BOLTS EVENLY WITHIN THE REBAR SPIRAL. EMBED BOLTS IN CONCRETE TO DEPTH AS RECOMMENDED BY POLE MANUFACTURER.
4. PROVIDE NO. 8 CU GROUNDING CONDUCTOR, BOND GROUNDING CONDUCTOR TO FOOTING REBAR, ANCHOR BOLTS, LIGHT POLE, AND EQUIPMENT GROUNDING CONDUCTOR.
5. CONCRETE SHALL BE PER CITY AND BOROUGH OF JUNEAU SPECS SECTION 03302.

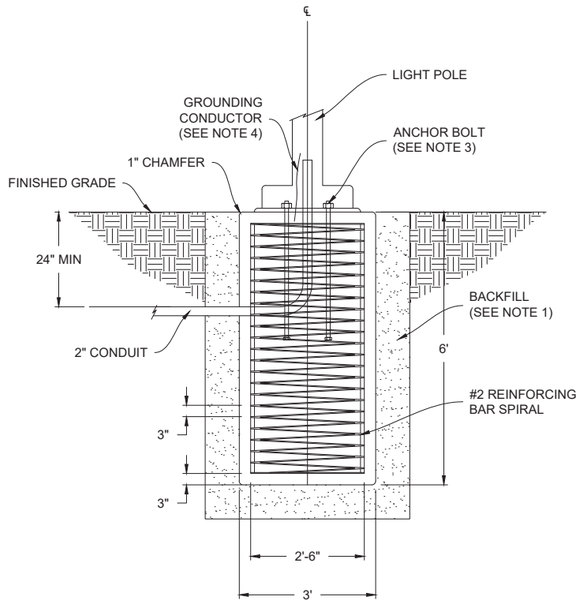

1 PRECAST CONCRETE FOOTING DETAIL

CONCRETE JUNCTION BOX DETAIL:

1. EACH COVER FOR TYPE 1A JUNCTION BOXES SHALL BE CAST IRON.
2. JUNCTION BOXES LOCATED IN A SIDEWALK SHALL BE INSTALLED WITH A 1/2" PREFORMED BITUMINOUS JOINT MATERIAL AROUND ITS PERIMETER.
3. ALL CONDUITS SHALL BE BONDED TO FORM A CONTINUOUS ELECTRICAL SECURE SYSTEM WITH THE GROUND AT THE LOAD CENTER JUNCTION BOX.
4. ALL LIDS SHALL BE GROUNDED IN ACCORDANCE WITH MANUFACTURER'S INSTRUCTION, STATE, AND LOCAL CODES.
5. ALL CONDUITS SHALL BE GROUTED IN KNOCKOUT SECTIONS IN ACCORDANCE WITH THE ALASKA SPECIFICATIONS FOR HIGHWAY CONSTRUCTION, LATEST EDITION.

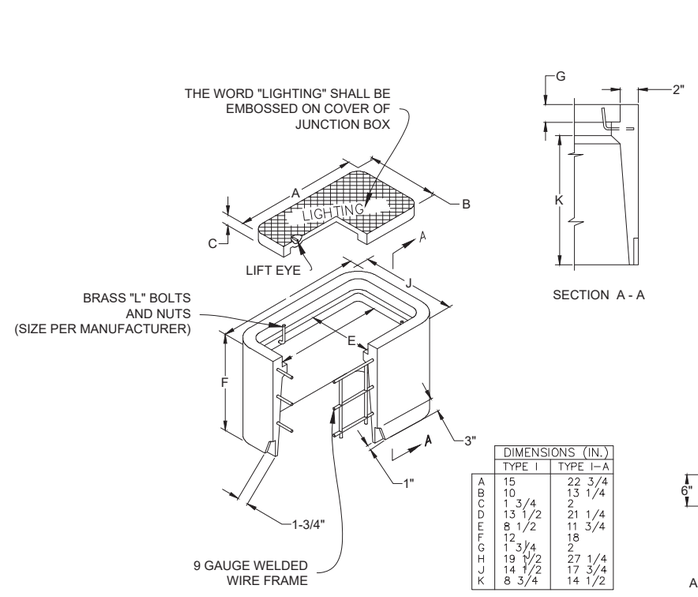

DIMENSIONS (IN.)	TYPE I	TYPE I–A
A	15	22 3/4
B	10	13 1/4
C	1 3/4	2
D	13 1/2	21 1/4
E	8 1/2	11 3/4
F	12	18
G	1 3/4	2
H	19 1/2	27 1/4
J	14 1/2	17 3/4
K	8 3/4	14 1/2

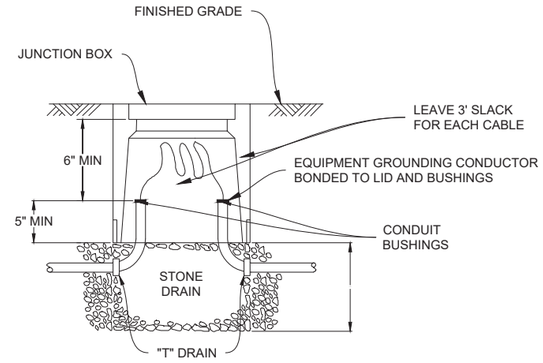

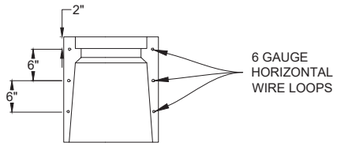

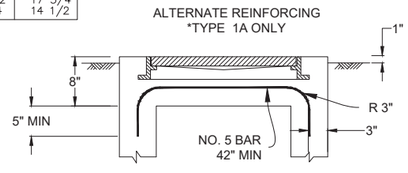

2 TYPE 1 & 1A JUNCTION BOX DETAIL

STATE OF ALASKA
Blake Rider 1/21/2022
Blake Rider
No. EE-114174
REGISTERED PROFESSIONAL ENGINEER

RECORD OF REVISIONS			
No.	DATE	DESCRIPTION	BY

RMC engineering
Douglas, Alaska
(907) 419-5476
www.rmces.com

DRAWN BY:	BSR
DESIGNED BY:	BSR
CHECKED BY:	VAM

CITY AND BOROUGH OF JUNEAU
ALASKA'S CAPITAL CITY

MISTY LANE RECONSTRUCTION

BE22-217

FOOTING AND JUNCTION BOX DETAIL

SHEET NUMBER
E-09
OF
24

January 31, 2022

TRENCH DETAIL:

1. REFER TO CIVIL DRAWINGS FOR BACKFILL AND COMPACTION REQUIREMENTS WHEN UNDERGROUND RACEWAY IS IN ROADWAY.
2. TRENCH DEPTH SHALL BE PER THE TRENCH DETAIL DRAWING. MINIMUM CONDUIT BURIAL DEPTH SHALL BE 24 INCHES. THIS DEPTH MAY BE REDUCED IF CONCRETE ENCASEMENT OR OTHER SUPPLEMENTAL PROTECTION IS PROVIDED. THE BOTTOM OF THE TRENCH SHALL BE FREE OF ANY SHARP ROCKS OR MATERIAL THAT MAY CAUSE DAMAGE TO CABLES AND CONDUIT. AT NO POINT SHALL THE CABLES SUSPEND OVER A HOLE OR GAP IN THE TRENCH, SUCH VOIDS SHALL BE FILLED WITH APPROPRIATE MATERIAL.
3. ALL TRENCHING DEPTHS SPECIFIED ARE MINIMUM AS MEASURED FROM THE FINAL GRADE TO THE TOP SURFACE OF THE CONDUIT. THE TRENCH ROUTING MAY BE ALTERED FROM THE LOCATION SHOWN ON THE SITE PLAN TO MAINTAIN THE MINIMUM DEPTH, COORDINATE WITH THE OWNER TO DETERMINE THE FINAL LOCATION.
4. CARE SHALL BE EXERCISED TO MINIMIZE THE RISK OF WATER FLOW SINCE THIS MAY CAUSE TRENCH DAMAGE AND A REDUCTION IN TRENCH DEPTH. IF THIS OCCURS, THE TRENCH MUST BE CLEARED TO THE SPECIFIED DEPTH BEFORE INSTALLING THE CONDUIT AND CABLE.
5. CONSTRUCTION SHALL BE ARRANGED SO THAT TRENCHES MAY BE LEFT OPEN FOR THE SHORTEST PRACTICAL TIME TO AVOID CREATING A HAZARD TO THE PUBLIC AND TO MINIMIZE THE LIKELIHOOD OF COLLAPSE OF THE TRENCH DUE TO OTHER CONSTRUCTION ACTIVITY, RAIN, ACCUMULATION OF WATER IN THE TRENCH, ETC.
6. THE FIRST 6 INCHES OF TRENCH BACKFILL SHALL BE CLASS "A" MATERIAL. THIS BACKFILL LAYER MUST BE CAREFULLY COMPACTED SO THAT THE CABLE CONDUIT WILL NOT BE DAMAGED.
7. BACKFILLING MUST BE COMPLETED IN SUCH A MANNER THAT VOIDS WILL BE ELIMINATED.
8. PIECES OF SCRAP CABLE OR OTHER MATERIAL REMAINING AFTER INSTALLATION MUST NOT BE BURIED IN THE TRENCH AS A MEANS OF DISPOSAL.
9. BACKFILLED MATERIAL SHALL BE COMPACTED FOR ALL ROAD CROSSING.
10. ALL EXPOSED ENDS OF CONDUIT MUST BE PLUGGED DURING CONSTRUCTION TO PREVENT THE ENTRANCE OF FOREIGN MATTER AND MOISTURE INTO THE CONDUIT. BURRS OR SHARP PROJECTIONS WHICH MIGHT DAMAGE THE CABLE MUST BE REMOVED.
11. ENSURE THE MINIMUM BENDING RADIUS OF THE CABLE IS 12 TIMES THE OVERALL DIAMETER OF THE CABLE OR PER THE MANUFACTURER'S INSTRUCTIONS, WHICHEVER IS LARGER. THE BENDING RADIUS IS MEASURED TO THE SURFACE OF THE CABLE ON THE INSIDE OF THE BEND.
12. CABLES SHALL BE TAGGED AND IDENTIFIED AT ALL ACCESSIBLE LOCATIONS AS THE CABLES ARE LAID. THE IDENTIFICATION MUST BE OF A PERMANENT TYPE, SUCH AS THAT DONE ON PLASTIC OR CORROSION RESISTANT METAL TAGS. THE TAG MUST BE SECURELY ATTACHED TO THE CABLE. PAPER OR CLOTH TAGS ARE NOT ACCEPTABLE.
13. CONDUIT SHALL BE 2 INCH NON-METALLIC, SCHEDULE 40.

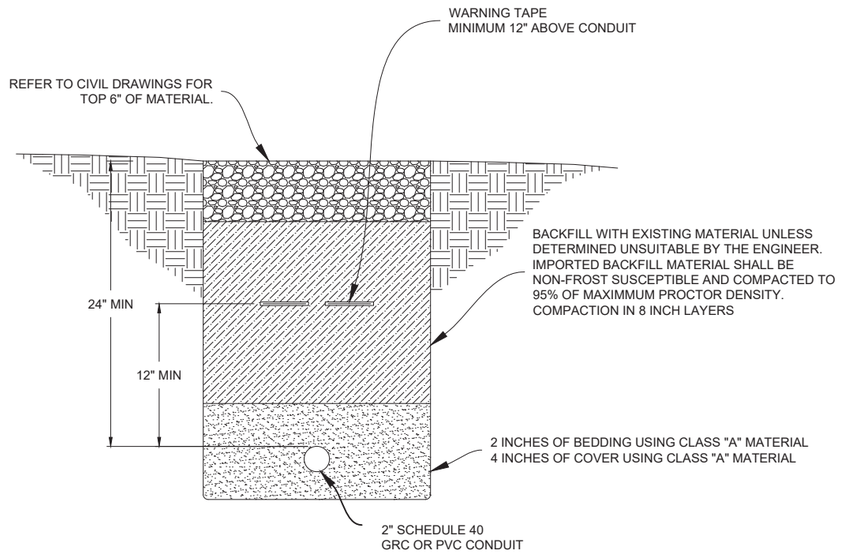

1 TRENCH DETAIL

STATE OF ALASKA
Blake Rider 1/21/2022
Blake Rider
No. EE-114174
REGISTERED PROFESSIONAL ENGINEER

RECORD OF REVISIONS			
No.	DATE	DESCRIPTION	BY

RMC engineering
Douglas, Alaska
(907) 419-5476
www.rmces.com

DRAWN BY:	BSR
DESIGNED BY:	BSR
CHECKED BY:	VAM

CITY AND BOROUGH OF JUNEAU
ALASKA'S CAPITAL CITY

MISTY LANE RECONSTRUCTION

BE22-217

TRENCH DETAIL

SHEET NUMBER
E-10
OF
24

January 31, 2022

HORIZONTAL CONTROL		
DESCRIPTOR	NORTHING	EASTING
CP-1	10417.34	49784.42
CP-2	10380.68	49931.69
CP-3	10308.11	50112.07
CP-4	10267.48	50311.67
CP-5	10204.82	50194.87
FINLEY OPC	10368.84	50023.35
YPC	10254.56	50326.63

VERTICAL CONTROL	
DESCRIPTOR	ELEVATION
JW BEAN YPC	29.64'
BONNET BOLT	32.10'
SE TOP OF CONC. SURROUND	41.84'

CURVE DATA				
DESCRIPTOR	RADIUS	LENGTH	CHORD	CHD. BRG.
C1	170.00'	96.87'	95.56'	S82°10'30"W
C2	230.00'	102.01'	101.18'	S85°47'30"W
C3	230.00'	45.29'	45.22'	S67°26'45"W
C4	120.00'	89.65'	87.58'	S49°35'52"E
C5	180.00'	64.62'	64.27'	N38°28'47"W
C6	180.00'	69.86'	69.42'	N59°52'55"W
C7	50.00'	37.43'	36.56'	N39°19'00"W
C8	50.00'	59.29'	55.88'	S85°15'44"W
C9	50.00'	48.74'	46.83'	S23°21'53"W
C10	50.00'	58.57'	55.28'	S38°07'11"E
C11	50.00'	45.77'	44.19'	N82°05'35"E

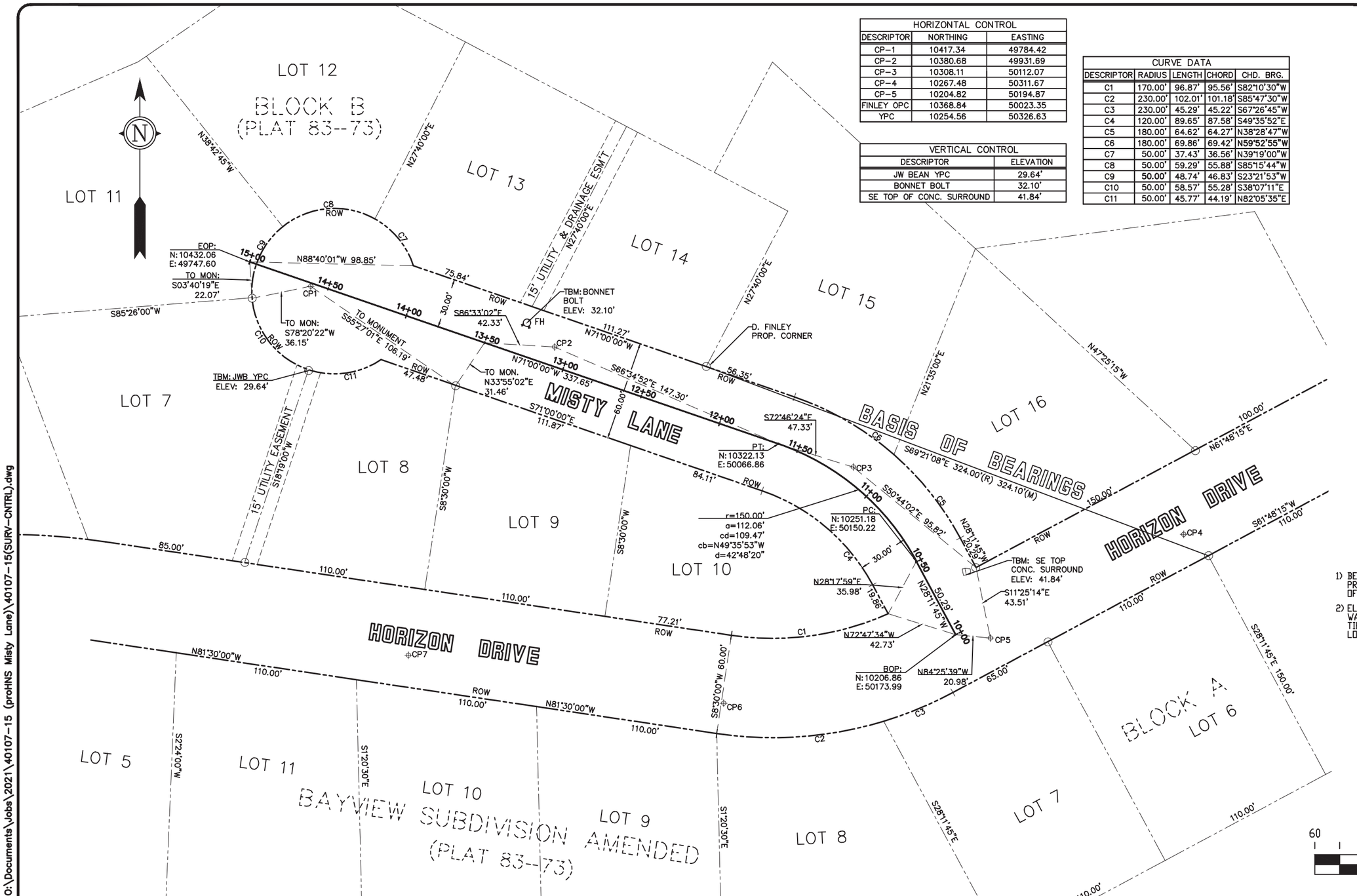

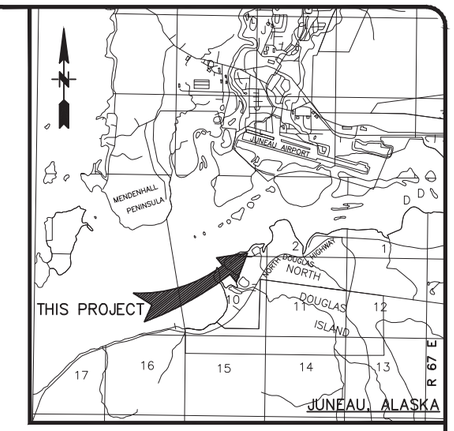

VICINITY MAP

LEGEND

- ○ SECONDARY MON. (RECOVERED)
- ⊕ MAG. NAIL WITH WASHER (SET)
- (R) RECORDED DATA
- (C) COMPUTED DATA
- (M) MEASURED DATA
- FH FIRE HYDRANT

PLAT NOTES

1) BEARING BASE IS AS SHOWN BETWEEN THE TWO FOUND PROPERTY CORNERS FOR LOT 14 BLK B AND LOT 6 BLOCK A OF THE BAYVIEW SUBDIVISION AMENDED (PLAT 83-73 JRD).

2) ELEVATION DATA IS PER THE R&M ENGINEERING "BAY VIEW SUB. WATER SYSTEM IMPROVEMENTS" SURVEY CONTROL DATA WITH A TIE TO TBM TRAN-5 (TOP NE CORNER OF TRANSFORMER, BETWEEN LOTS 5 AND 11 ADJACENT TO HORIZON DRIVE

60 30 0 60 120

SCALE IN FEET

JANUARY 17, 2022 O:\Documents\Jobs\2021\40107-15 (proHNS Misty Lane)\40107-15(SURV-CNTRL).dwg

STATE OF ALASKA 49TH
NELLY J. O'NEILL
LS 13321
1/17/22
REGISTERED PROFESSIONAL LAND SURVEYOR

RECORD OF REVISIONS			
No.	DATE	DESCRIPTION	BY

NORTH 57* LAND SURVEYING LLC
(907) 747-6700 215-F SMITH STREET, SITKA, AK
8800 GLACIER HWY, SUITE 224 1/2, JUNEAU, AK
MAILING ADDRESS - 2007 CASCADE CREEK ROAD, SITKA, AK 99835
www.north57landsurveying.com

DRAWN BY:	SO
CHECKED BY:	KO
DATE:	1-17-22

CITY AND BOROUGH OF JUNEAU
ENGINEERING & PUBLIC WORKS

MISTY LANE RECONSTRUCTION

NORTH 57 PROJECT# 40107-15

SURVEY CONTROL SHEET

PORTIONS OF BLOCK A AND BLOCK B, AMENDED BAYVIEW SUB. (PLAT# 83-73, JRD)

SHEET NUMBER S-01 OF 24