BARTLETT REGIONAL HOSPITAL WATER AND SEWER UPGRADES

Contract No. BE22-185

File No. 2163

CITY AND BOROUGH OF JUNEAU

ALASKA'S CAPITAL CITY

ENGINEERING DEPARTMENT

SECTION 00005 - TABLE OF CONTENTS

DIVISION 0 - BIDDING AND CONTRACT REQUIREMENTS, CONTRACT FORMS, AND CONDITIONS OF THE CONTRACT

BIDDING and CONTRACT REQUIREMENTS		No. of Pages
00005	Table of Contents	1
00030	Notice Inviting Bids	2
00100	Instructions to Bidders	10
00300	Bid	2
00310	Bid Schedule	2
00320	Bid Bond	1
00360	Subcontractor Report	2
00370	Contractor Financial Responsibility	3
CONTRACT FORMS		
00500	Agreement	7
00610	Performance Bond	2
00620	Payment Bond	2
CONDITIONS OF THE CONTRACT		
00700	General Conditions	48
00800	Supplementary General Conditions	6
00830	Alaska Labor Standards, Reporting, and Prevailing Wage Rate Determination	1
	Appendix A – Pamphlet 600 – Effective September 1, 2021	39
00852	Permits	1
00853	Standard Details	1
TECHNICAL SPECIFICATIONS		
Special Provisions		33

LIST OF DRAWINGS – 16 SHEETS

Sheet No.	Description
C001	Cover Sheet
C002	General Notes, Abbreviations and Symbols
C003	Survey Control Diagram
C004	Project Phasing and Traffic Control Notes
C100	Construction Details
C101	Construction Details
C102	Construction Details
C103	Construction Details
C104	Construction Details
C105	Water Line Connection Details
C200	Utility Plan View
C201	Utility Plan View
C202	Utility Plan View
C203	Utility Plan View
C300	Profile – Water Line
C301	Profile – Sewer Line

SECTION 00030 NOTICE INVITING BIDS

OBTAINING CONTRACT DOCUMENTS. The Contract Documents are entitled:

BARTLETT REGIONAL HOSPITAL WATER AND SEWER UPGRADES
Contract No. BE22-185

The Contract Documents may be downloaded from the CBJ Public Purchase webpage at https://www.publicpurchase.com/juneau,ak. Instructions for the Public Purchase registration process can be found here https://juneau.org/engineering-public-works/bids-rfps.

PRE-BID CONFERENCE. Prospective Bidders are encouraged to attend a pre-Bid conference to discuss the proposed WORK, which will be conducted by the OWNER, at **10:00 a.m. on January 19, 2022**, via teleconference. The object of the conference is to acquaint Bidders with the bid documents and site conditions. Prospective bidders intending to participate shall email contracts@juneau.org **by 4:30 p.m. on January 18, 2022,** to obtain the call-in instructions.

DESCRIPTION OF WORK. The WORK covered in the Contract Documents includes baes course grading D-1, removal and replacement of sanitary sewer manholes with fiberglass baes liner, removal and replacement of sanitary sewer pipe, installation of sanitary sewer service pipe and cleanouts, installation of 16" HDPE water main, installation of 16" butterfly valves, temporary water system, filling existing water main with slurry, installation of fire hydrant assembly, removal of fire hydrant assembly, 6-Inch water service to Bartlett House, asphalt pavement removal and replacement, chain link fence removal and resetting, topsoil and seeding, construction surveying, traffic control and other miscellaneous related WORK.

ENGINEER'S ESTIMATE RANGE: Between $500,000 and $650,000.

COMPLETION OF WORK.

Work Description	**Completion Date**
The 16" HDPE water line connection WORK on Hospital Drive and Salmon Creek Access Road including the 2-Inch AEL&P Water Service connection	Shall be completed and accepted within two (2) days of the beginning of the water shutdown period as established by AEL&P
All other WORK	July 1, 2022

DEADLINE FOR BIDDER QUESTIONS: 4:30pm Alaska Time on January 25, 2022.

DEADLINE FOR BIDS: Electronic bids must be received by the Purchasing Division **prior to 2:00 p.m., Alaska Time on February 1, 2022,** or such later time as may be announced by addendum at any time prior to the deadline. Bids will be opened immediately thereafter via conference call, unless otherwise specified. Bidders may attend this bid opening on the conference call line 907-713-2140, with participant code 258358.

SUBMISSION INSTRUCTIONS: Timely responses are accepted via Electronic Submission at Public Purchase, www.publicpurchase.com, the CBJ's eProcurement Provider. Bidders must register online prior to submitting a bid, it may take up to 24 hours for registration to be complete.

Late responses will not be accepted.

To Respond, Bidders must complete an online registration.

- Registration is a two-step process, registering with Public Purchase, and then registering with CBJ within Public Purchase.
- Get help registering using the Public Purchase Help Menu Tab.
- Register early to avoid missing the deadline, as Registration may take up to 24 hours to complete.

Registered Bidders may submit a Bid Schedule to Public Purchase by downloading the provided PDF solicitation documents, filling out the fields indicated, and uploading the document to Public Purchase.

SITE OF WORK. The site of the WORK is Shell space 2402B at Bartlett Regional Hospital, Juneau, AK.

BIDDING, CONTRACT, or TECHNICAL QUESTIONS. All communications relative to this WORK, prior to opening Bids, shall be directed to the following:

Caleb Comas, Contract Administrator
CBJ Engineering Department, 3rd Floor, Marine View Center
Email: caleb.comas@juneau.org
Telephone: (907) 586-0800 ext. 4196
Fax: (907) 586-4530

BID SECURITY. Each Bid shall be accompanied by a certified or cashier's check or Bid Bond, in the amount of 5% percent of the Bid, payable to the City and Borough of Juneau, Alaska, as a guarantee that the Bidder, if its Bid is accepted, will promptly execute the Agreement. A Bid shall not be considered unless one of the forms of Bidder's security is provided as prescribed in Section 00100, Article 12, at the time of bid.

CONTRACTOR'S LICENSE. All contractors are required to have a current Alaska Contractor's License, prior to submitting a Bid, and a current Alaska Business License prior to award.

BID TO REMAIN OPEN. The Bidder shall guarantee the Bid for a period of 60 Days from the date of Bid opening. Any component of the Bid may be awarded anytime during the 60 Days.

OWNER'S RIGHTS RESERVED. The OWNER reserves the right to reject any or all Bids, to waive any informality in a Bid, and to make award to the lowest responsive, responsible Bidder as it may best serve the interests of the OWNER.

OWNER: City and Borough of Juneau

By: _____ 1/11/2022
Caleb Comas, Contract Administrator Date

END OF SECTION

SECTION 00100 - INSTRUCTIONS TO BIDDERS

1.0 DEFINED TERMS. Terms used in these Instructions to Bidders and the Notice Inviting Bids, which are defined in the General Conditions, have the meanings assigned to them in the General Conditions. The term "Bidder" means one who submits a Bid directly to the OWNER, as distinct from a sub-bidder, who submits a Bid to a Bidder.

2.0 INTERPRETATIONS AND ADDENDA.

A. INTERPRETATIONS. All questions about the meaning or intent of the Contract Documents are to be directed to the Engineering Contracts Administrator. Interpretations or clarifications considered necessary by the Engineering Contracts Administrator in response to such questions will be issued by Addendum, mailed, faxed, or delivered to all parties recorded by the Engineering Contracts Administrator, or OWNER, as having received the Contract Documents. Questions received less than seven Days prior to the Deadline for Bids may not be answered. Only questions answered by formal written Addendum will be binding. Oral and other interpretations or clarifications will be without legal effect.

B. ADDENDA. Addenda may be issued to modify the Contract Documents as deemed advisable by the OWNER. Addenda may be faxed or, if addendum format warrants, addenda may be posted to the CBJ Engineering Department website. In any event, notification of addendum issuance will be faxed to planholders. Hard copies are available upon request. The OWNER will make all reasonable attempts to ensure that all planholders receive notification of Addenda, however, it is strongly recommended by the OWNER that bidders independently confirm the contents, number, and dates of each Addendum prior to submitting a Bid.

3.0 FAIR COMPETITION. More than one Bid from an individual, firm, partnership, corporation, or association under the same or different names will not be considered. If the OWNER believes that any Bidder is interested in more than one Bid for the WORK contemplated, all Bids in which such Bidder is interested will be rejected. If the OWNER believes that collusion exists among the Bidders, all Bids will be rejected.

4.0 RESPONSIBILITY OF BIDDERS. Only responsive Bids from responsible Bidders will be considered. A Bid submitted by a Bidder determined to be not responsible may be rejected. The OWNER may find a bidder to be not responsible for any one of the following reasons, but is not limited in its responsibility analysis to the following factors:

A. Evidence of bid rigging or collusion;

B. Fraud or dishonesty in the performance of previous contracts;

C. Record of integrity;

D. More than one bid for the same work from an individual, firm, or corporation under the same or different name;

E. Unsatisfactory performance on previous or current contracts;

F. Failure to pay, or satisfactorily settle, all bills due for labor and material on previous contracts;

G. Uncompleted work that, in the judgment of the OWNER, might hinder or prevent the bidder's prompt completion of additional work, if awarded;

H. Failure to reimburse the OWNER for monies owed on any previous contracts;

I. Default under previous contracts;

J. Failure to comply with any qualification requirements of the OWNER; special standards for responsibility, if applicable, will be specified. These special standards establish minimum standards or experience required for a responsible Bidder on a specific contract;

K. Engaging in any activity that constitutes a cause for debarment or suspension under the CBJ Procurement Code 53.50 or submitting a bid during a period of debarment;

L. Lack of skill, ability, financial resources, or equipment required to perform the contract.

M. Lack of legal capacity to contract.

N. Bidders must be registered as required by law and in good standing for all amounts owed to the OWNER per Paragraph 21.0 of this Section.

O. Failure to submit all completed documents as required and specified on the Bid Form, Section 00300.

Nothing contained in this section deprives the OWNER of its discretion in determining the lowest responsible bidder. Before a Bid is considered for award, a Bidder may be requested to submit information documenting its ability and competency to perform the WORK, according to general standards of responsibility and any special standards which may apply. It is Bidder's responsibility to submit sufficient, relevant, and adequate information. OWNER will make its determination of responsibility and has no obligation to request clarification or supplementary information.

5.0 NON-RESPONSIVE BIDS. Only responsive Bids will be considered. Bids may be considered non-responsive and may be rejected. Some of the reasons a Bid may be rejected for being non-responsive are:

A. If a Bid is received by the CBJ Purchasing Division after the Deadline for Bids.

B. If the Bid is on a form other than that furnished by the OWNER, or legible copies thereof; or if the form is altered or any part thereof is detached; or if the Bid is improperly signed.

C. If there are unauthorized additions, conditional or alternate Bids, or irregularities of any kind which may tend to make the bid incomplete, indefinite, ambiguous as to its meaning, or in conflict with the OWNER's Bid document.

D. If the Bidder adds any unauthorized conditions, limitations, or provisions reserving the right to accept or reject any award, or to enter into a contract pursuant to an award. This does not exclude a Bid limiting the maximum gross amount of awards acceptable to any one Bidder at any one Bid opening, provided that any selection of awards will be made by the OWNER.

E. If the Bid does not contain a Unit Price for each pay item listed, except in the case of

authorized alternate pay items.

F. If the Bidder has not acknowledged receipt of each Addendum.

G. If the Bidder fails to furnish an acceptable Bid guaranty with the Bid.

H. If any of the Unit Prices Bid are excessively unbalanced (either above or below the amount of a reasonable Bid) to the potential detriment of the OWNER.

I. If a Bid modification does not conform to Article 15.0 of this Section.

J. Failure to submit all completed documents as required and specified on the Bid Form, Section 00300.

6.0 BIDDER'S EXAMINATION OF CONTRACT DOCUMENTS AND SITE. It is the responsibility of each Bidder before submitting a Bid:

A. To examine thoroughly the Contract Documents, and other related data identified in the Bidding documents (including "technical data" referred to below):

1. To visit the site to become familiar with and to satisfy the Bidder as to the general and local conditions that may affect cost, progress, or performance, of the WORK,
2. To consider federal, state and local laws and regulations that may affect cost, progress, or performance of the WORK,
3. To study and carefully correlate the Bidder's observations with the Contract Documents, and other related data; and
4. To notify the ENGINEER of all conflicts, errors, or discrepancies in or between the Contract Documents and such other related data.

7.0 REFERENCE IS MADE TO THE SUPPLEMENTARY GENERAL CONDITIONS FOR IDENTIFICATION OF:

A. Those reports of explorations and tests of subsurface conditions at the site which have been utilized by the Engineer of Record in the preparation of the Contract Documents. The Bidder may rely upon the accuracy of the technical data contained in such reports, however, the interpretation of such technical data, including any interpolation or extrapolation thereof, together with non-technical data, interpretations, and opinions contained therein or the completeness thereof is the responsibility of the Bidder.

B. Those Drawings of physical conditions in or relating to existing surface and subsurface conditions (except underground utilities) which are at or contiguous to the site have been utilized by the Engineer of Record in the preparation of the Contract Documents. The Bidder may rely upon the accuracy of the technical data contained in such Drawings, however, the interpretation of such technical data, including any interpolation or extrapolation thereof, together with nontechnical data, interpretations, and opinions contained in such Drawings or the completeness thereof is the responsibility of the Bidder.

C. Copies of such reports and Drawings will be made available by the OWNER to any Bidder on request if said reports and Drawings are not bound herein. Those reports and Drawings are not part of the Contract Documents, but the technical data contained therein upon

which the Bidder is entitled to rely, as provided in Paragraph SGC-4.2 of the Supplementary General Conditions, are incorporated herein by reference.

D. Information and data reflected in the Contract Documents with respect to underground utilities at or contiguous to the site is based upon information and data furnished to the OWNER and the Engineer of Record by the owners of such underground utilities or others, and the OWNER does not assume responsibility for the accuracy or completeness thereof unless it is expressly provided otherwise in the Supplementary General Conditions, or in Section 01530 - Protection and Restoration of Existing Facilities of the General Requirements.

E. Provisions concerning responsibilities for the adequacy of data furnished to prospective Bidders on subsurface conditions, underground utilities and other physical conditions, and possible changes in the Contract Documents due to differing conditions appear in Paragraphs 4.2, 4.3, and 4.4 of the General Conditions.

F. Before submitting a Bid, each Bidder will, at Bidder's own expense, make or obtain any additional examinations, investigations, explorations, tests, and studies and obtain any additional information and data which pertain to the physical conditions (surface, subsurface, and underground utilities) at or contiguous to the site or otherwise which may affect cost, progress, or performance of the WORK and which the Bidder deems necessary to determine its Bid for performing the WORK in accordance with the time, price, and other terms and conditions of the Contract Documents.

G. On request in advance, the OWNER will provide each Bidder access to the site to conduct such explorations and tests as each Bidder deems necessary for submission of a Bid. Bidder shall fill all holes and shall clean up and restore the site to its former condition upon completion of such explorations.

H. The lands upon which the WORK is to be performed, rights-of-way and easements for access thereto and other lands designated for use by the CONTRACTOR in performing the WORK are identified in the Contract Documents. All additional lands and access thereto required for temporary construction facilities or storage of materials and equipment are to be provided by the CONTRACTOR. Easements for permanent structures or permanent changes in existing structures are to be obtained and paid for by the OWNER unless otherwise provided in the Contract Documents.

I. The submission of a Bid will constitute an incontrovertible representation by the Bidder that the Bidder has complied with every requirement of Article 6.0, "Bidder's Examination of Contract Documents and Site" herein, that without exception the Bid is premised upon performing the WORK required by the Contract Documents and such means, methods, techniques, sequences, or procedures of construction as may be indicated in or required by the Contract Documents, and that the Contract Documents are sufficient in scope and detail to indicate and convey understanding of all terms and conditions for performance of the WORK.

8.0 BID FORM.

A. The Bid shall be made on the Bid Schedule(s) bound herein, or by another acceptable submission method as specified in Section 00030, Notice Inviting Bids, and shall contain the following: Sections 00300, 00310 or other specified acceptable form of Bid Schedule,

the required Bid Security, and any other documents required in Section 00300 – Bid.

B. All blanks on the Bid Form and Bid Schedule must be completed in ink or typed.

C. Bids by corporations must be executed in the corporate name by the president, a vice-president (or other corporate officer). The corporate address and state of incorporation must appear below the signature.

D. Bids by partnerships must be executed in the partnership name and be signed by a managing partner, and the official address of the partnership must appear below the signature.

E. The Bidder's Bid must be signed. All names must be printed or typed below the signature.

F. The Bid shall contain an acknowledgment of receipt of all Addenda, the numbers of which shall be filled in on the Bid form. Failure to acknowledge Addenda may render Bid non-responsive and may cause its rejection.

G. The address to which communications regarding the Bid are to be directed must be shown.

9.0 QUANTITIES OF WORK. The quantities of WORK, or material, stated in Unit Price items of the Bid are supplied only to give an indication of the general scope of the WORK; the OWNER does not expressly or by implication agree that the actual amount of WORK, or material, will correspond therewith, and reserves the right after award to increase or decrease the amount of any Unit Price item of the WORK by an amount up to and including 25 percent of any Bid item, without a change in the Unit Price, and shall include the right to delete any Bid item in its entirety, or to add additional Bid items up to and including an aggregate total amount not to exceed 25 percent of the Contract Price (see Section 00700 - General Conditions, Article 10 Changes In the WORK).

10.0 SUBSTITUTE OR "OR-EQUAL" ITEMS. Substitution requests are not accepted during the bidding process. The procedure for the submittal of substitute or "or-equal" products is specified in Section 01300 – Contractor Submittals.

11.0 SUBMISSION OF BIDS. The Bid shall be delivered by the time and to the place stipulated in Section 00030 - Notice Inviting Bids. It is the Bidder's sole responsibility to see that its Bid is received in proper time. Hand-delivered, mailed, courier-delivered, oral, telegraphic, emailed, or faxed Bids will not be considered.

12.0 BID SECURITY, BONDS, AND INSURANCE. Each Bid shall be accompanied by a certified, or cashier's check, or approved Bid Bond in an amount of at least 5 percent of the total Bid price. The "total Bid price" is the amount of the Base Bid, plus the amount of alternate Bids, if any, which total to the maximum amount for which the CONTRACT could be awarded. Said check or Bond shall be made payable to the OWNER and shall be given as a guarantee that the Bidder, if offered the WORK, will enter into an Agreement with the OWNER, and will furnish the necessary insurance certificates, Payment Bond, and Performance Bond; each of said Bonds, if required, and insurance amounts shall be as stated in the Supplementary General Conditions. In case of refusal or failure to enter into said Agreement, the check or Bid Bond, as the case may be, may be forfeited to the OWNER. If the Bidder elects to furnish a Bid Bond as its Bid security, the Bidder shall use the Bid Bond form bound herein, or one conforming substantially to it in form. Bid Bonds must be accompanied by a legible Power of Attorney.

Bid Bonds shall be submitted by being scanned and uploaded to Public Purchase along with the other required Bid documents. When a Bid security check is used, it must be received by the Purchasing Division prior to the Deadline for Bids. Bid security checks will be time and date stamped by the Purchasing Division, which will establish the official time of receipt.

In addition to uploading a scanned file of the Bid Bond, the original hardcopy Bid Bond shall be submitted and received by the CBJ Contracts Office by 2:00 p.m. Alaska Time no more than seven calendar days after Bid Opening.

In lieu of the original hardcopy Bid Bond submittal requirement, bidders who have a Surety 2000 Bid Bond ID may validate their Bid Bond with Surety 2000 within the Bid Bond Response Information Form in the Public Purchase bid page.

Bid security checks shall be submitted in a sealed envelope that clearly indicates: that a bid security check is enclosed, the name of the bidding firm, and the project name and number. The envelope must not reveal the check amount so that the final Bid price will not be known until the sealed bids are opened.

Bid security checks delivered **in person** or by **courier** service must be delivered to:

PHYSICAL LOCATION:
City and Borough of Juneau, Purchasing Division
105 Municipal Way, Room 300
Juneau, AK 99801

Bid security checks delivered by **U.S. Postal Service** must be mailed to:

MAILING ADDRESS:
City and Borough of Juneau, Purchasing Division
155 South Seward Street
Juneau, AK 99801

Mailing/delivery times to Alaska may take longer than other areas of the U.S. Late bid security checks may cause a Bid to be deemed non-responsive

13.0 RETURN OF BID SECURITY. The OWNER will return all Bid security checks (certified or cashier's) accompanying such of the Bids as are not considered in making the award. All other Bid securities will be held until the Agreement has been executed. Following execution of the Agreement, all other Bid security checks will be returned to the respective Bidders whose Bids they accompanied and Bid security bonds will be appropriately discarded.

14.0 DISCREPANCIES IN BIDS. In the event there is more than one Pay Item in a Bid Schedule, the Bidder shall furnish a price for all Pay Items in the schedule, and failure to do so may render the Bid non-responsive and cause its rejection. In the event there are Unit Price Pay Items in a Bid Schedule and the "amount" indicated for a Unit Price Bid Item does not equal the product of the Unit Price and quantity, the Unit Price shall govern and the amount will be corrected accordingly, and the Bidder shall be bound by said correction. In the event there is more than one Pay Item in a Bid Schedule and the total indicated for the schedule does not agree with the sum of the prices Bid on the individual items, the prices Bid on the individual items shall govern and the total for the schedule will be corrected accordingly, and the Bidder shall be bound by said correction.

15.0 BID MODIFICATIONS AND UNAUTHORIZED ALTERNATIVE BIDS.

A. Any bidder may deliver a modification to a bid in person, by mail or fax (907-586-4561), provided that such modification is received by the Purchasing Division no later than the

deadline for bids. Modifications will be time and date stamped by the Purchasing Division, which will establish the official time of receipt of the modification. The modification must not reveal the bid price but should be in the form of an addition or subtraction or other modification so that the final prices will not be known until the sealed bid is opened.

The Bid modifications shall be provided on the **Bid Modification Form** located at the end of this Section. Submittal of any other form by the vendor may deem the modification unacceptable by the OWNER. **A mail or fax modification should not reveal the Bid price but should provide the addition or subtraction or other modification so that the final prices will not be known by the City and Borough until the sealed Bid is opened.** Submitted Modification forms shall include the modification to the unit price or lump sum amount of each pay item modified.

FAX DISCLAIMER: It is the responsibility of the bidder to submit modifications in a timely manner. Bidders' use of a fax machine to modify their bid shall be at bidders' sole risk. The Purchasing Division will attempt to keep the fax machine in good working order but will not be responsible for bid modifications that are late due to mechanical failure, a busy fax machine, or any other cause arising from bidder's use of a fax machine, even if bidder submits a transmission report or provides other confirmation indicating that the bidder transmitted a bid modification prior to the deadline. The City will not be responsible for its failure to receive the modification whether such failure is caused by equipment or human error, or otherwise. Bidders are therefore strongly encouraged to confirm receipt of their bid modification with the Purchasing Division (907-586-5215) prior to deadline.

B. Conditioned bids, limitations, or provisos attached to the Bid or bid modification will render it unauthorized and cause its rejection as being non-responsive. The completed Bid forms shall be without interlineations, alterations, or erasures in the printed text. All changes shall be initialed by the person signing the Bid. Alternative Bids will not be considered unless called for.

16.0 WITHDRAWAL OF BID. Prior to the Deadline for Bids, the Bid may be withdrawn by the Bidder by means of a written request, signed by the Bidder or its properly authorized representative. Such written request must be delivered to the place stipulated in the Notice Inviting Bids for receipt of Bids.

17.0 AWARD OF CONTRACT.

A. Award of a contract, if it is awarded, will be on the basis of materials and equipment described in the Drawings or specified in the Technical Specifications and will be made to the lowest responsive, responsible Bidder whose Bid complies with all the requirements prescribed. Unless otherwise specified, any such award will be made within the period stated in the Notice Inviting Bids that the Bids are to remain open. Unless otherwise indicated, a single award will be made for all the Bid items in an individual Bid Schedule.

B. If the OWNER has elected to advertise this Project with a Base Bid and Alternates, the OWNER may elect to award the contract for the Base Bid, or the Base Bid in combination with one or more Alternates selected by the OWNER. In either case, award shall be made to the responsive, responsible bidder offering the lowest total Bid for the WORK to be awarded.

C. Award of a contract is subject to the adoption of an appropriation of funds by the City Assembly.

18.0 EXECUTION OF AGREEMENT.

A. All Bids of value greater than $1,000,000 must be approved by the CBJ Assembly. After the CBJ Assembly has approved the award and after the Bid protest period, the OWNER will issue a Notice of Intent to Award to the approved Bidder. The Bidder to whom award is made shall execute a written Agreement with the OWNER on the Agreement form, Section 00500, collect insurance, and shall furnish all certificates and Bonds required by the Contract Documents within 10 Days (calendar) from the date of the Notice of Intent to Award letter.

B. Failure or refusal to enter into the Agreement as herein provided or to conform to any of the stipulated requirements in connection therewith shall be just cause for annulment of the award and forfeiture of the Bid security. If the lowest responsive, responsible Bidder refuses or fails to execute the Agreement, the OWNER may award the contract to the second lowest responsive, responsible Bidder. If the second lowest responsive, responsible Bidder refuses or fails to execute the Agreement, the OWNER may award the contract to the third lowest responsive, responsible Bidder. On the failure or refusal of such second or third lowest Bidder to execute the Agreement, each such Bidder's Bid securities shall be likewise forfeited to the OWNER.

19.0 LIQUIDATED DAMAGES. Provisions for liquidated damages if any, are set forth in Section 00500 - Agreement.

20.0 FILING A PROTEST.

A. A Bidder may protest the proposed award of a competitive sealed Bid by the City and Borough of Juneau. The protest shall be executed in accordance with CBJ Ordinance 53.50.062 PROTESTS and CBJ Ordinance 53.50.080 ADMINISTRATION OF PROTEST. The entire text of the CBJ Purchasing Ordinance can be accessed at the CBJ website, *http://www.juneau.org/law/code/code.php*, or call the CBJ Purchasing Division at (907) 586-5215 for a copy of the ordinance.

B. Late protests shall not be considered by the CBJ Purchasing Officer.

21.0 <u>CONTRACTOR'S GOOD STANDING WITH CBJ FINANCE DEPARTMENT</u>: <u>Contractors must be in good standing with the CBJ prior to award, and prior to any contract renewals,</u> and in any event no later than ***<u>seven business days</u>*** following notification by the CBJ of intent to award. **Good standing** means: all amounts owed to the CBJ are current and the Contractor is not delinquent with respect to any taxes, fees, assessment, or other monies due and owed the CBJ, or a Confession of Judgment has been executed and the Contractor is in compliance with the terms of any stipulation associated with the Confession of Judgment, including being current as to any installment payments due; and Contractor is current in all CBJ reporting obligations (such as sales tax registration and reporting and business personal property declarations). <u>Failure to meet these requirements may be cause for rejection of your bid</u>. To

determine if your business is in good standing, or for further information, contact the CBJ Finance Department's Sales Tax Division at (907) 586-5215 for sales tax issues, Assessor's Office at (907)586-5215 for business personal property issues, or Collections Division at (907) 586-5215 for all other accounts.

22.0 PERMITS AND LICENSES. The CONTRACTOR is responsible for all WORK associated with meeting any local, state, and/or federal permit and licensing requirements.

CITY AND BOROUGH OF JUNEAU
PURCHASING DIVISION
FAX NO. 907-586-4561

BID MODIFICATION FORM

Modification Number: _____ Modification Page ____ of ____

Note: All modifications shall be made to the original bid amount(s). If more than one Modification form is submitted by any one bidder, changes from all Modification forms submitted will be combined and applied to the original bid. Changes to the modified Bid amounts will be calculated by the OWNER. Bidder may use multiple modification pages if required.

PAY ITEM NO.	PAY ITEM DESCRIPTION	MODIFICATIONS TO UNIT PRICE (*indicate* +/-)

Bid Total Increase or Decrease: $_____

_____
Name of Bidding Firm

_____
Responsible Party Signature

_____
Printed Name (must be an authorized signatory for Bidding Firm)

END OF SECTION

SECTION 00300 - BID

BID TO: THE CITY AND BOROUGH OF JUNEAU

1. The undersigned Bidder proposes and agrees, if this Bid is accepted, to enter into an Agreement with the OWNER on the form included in the Contract Documents (as defined in Article 7 of Section 00500 - Agreement) to perform the WORK as specified or indicated in said Contract Documents entitled

Bartlett Regional Hospital Water and Sewer Upgrades Contract No. BE22-185

2. Bidder accepts all of the terms and conditions of the Contract Documents, including without limitation those in the "Notice Inviting Bids" and "Instructions to Bidders," dealing with the disposition of the Bid Security.

3. This Bid will remain open for the period stated in the "Notice Inviting Bids" unless otherwise required by law. Bidder will enter into an Agreement within the time and in the manner required in the "Notice Inviting Bids" and the "Instructions to Bidders," and will furnish insurance certificates, Payment Bond, Performance Bond, and any other documents as may be required by the Contract Documents.

4. Bidder has familiarized itself with the nature and extent of the Contract Documents, WORK, site, locality where the WORK is to be performed, the legal requirements (federal, state and local laws, ordinances, rules, and regulations), and the conditions affecting cost, progress or performance of the WORK and has made such independent investigations as Bidder deems necessary.

5. This Bid is genuine and not made in the interest of or on behalf of any undisclosed person, firm or corporation and is not submitted in conformity with any agreement or rules of any group, association, organization or corporation; Bidder has not directly or indirectly induced or solicited any other Bidder to submit a false or sham Bid; Bidder has not solicited or induced any person, firm or corporation to refrain from bidding; and Bidder has not sought by collusion to obtain for itself any advantage over any other Bidder or over OWNER.

6. To all the foregoing, and including all Bid Schedule and information required of Bidder contained in this Bid Form, said Bidder further agrees to complete the WORK required under the Contract Documents within the Contract Time stipulated in said Contract Documents, and to accept in full payment therefore the Contract Price based on the total bid price(s) named in the aforementioned Bid Schedule.

7. Bidder has examined copies of all the Contract Documents including the following Addenda (receipt of all of which is hereby acknowledged by the Undersigned):

Addenda No.	Date Issued	Addenda No.	Date Issued

Give number and date of each Addenda above. Failure to acknowledge receipt of all Addenda may cause the Bid to be non-responsive and may cause its rejection.

8. The Bidder has read this Bid and agrees to the conditions as stated herein by signing its signature in the space provided below.

Dated: _____	Bidder: _____ (Company Name)
Alaska CONTRACTOR's Business License No: _____	By: _____ (Signature)
Alaska CONTRACTOR's License No: _____	Printed Name: _____
Telephone No: _____	Title: _____
Fax No: _____	Address: _____ (Street or P.O. Box)
E-mail: _____	_____ (City, State, Zip)

9. TO BE CONSIDERED, ALL BIDDERS MUST COMPLETE AND INCLUDE THE FOLLOWING AT THE TIME OF THE DEADLINE FOR BIDS. **MISSING DOCUMENTS WILL DEEM THIS BID NON-RESPONSIVE:**

- Bid, Section 00300 (includes Addenda receipt statement)
- Completed Bid Schedule, Section 00310, or other acceptable form of Bid Schedule as specified in Section 00030, Notice Inviting Bids
- Bid Security (Bid Bond, Section 00320, or by a certified or cashier's check as stipulated in the Notice Inviting Bids, Section 00030)
- **Contractor Financial Responsibility, Section 00370**

10. The apparent low Bidder is required to complete and submit the following documents by 4:30 p.m. on the ***fifth business day*** following the date of the Posting Notice.

- Subcontractor Report, Section 00360

The apparent low Bidder who fails to submit the completed Subcontractor Report within the time specified in Section 00360 – Subcontractor Report, may be found to be not a responsible Bidder and may be required to forfeit the Bid security. The OWNER may then consider the next lowest Bidder for award of the contract.

11. The successful Bidder will be required to submit, ***within ten Days (calendar)*** after the date of the "Notice of Intent to Award" letter, the following executed documents:

- Agreement Forms, Section 00500
- Performance Bond, Section 00610
- Payment Bond, Section 00620
- Certificates of Insurance, (CONTRACTOR) Section 00700 and Section 00800

END OF SECTION

SECTION 00310 - BID SCHEDULE

PAY ITEM NO.	PAY ITEM DESCRIPTION	PAY UNIT	APPROX. QUANTITY	UNIT PRICE		AMOUNT	
				DOLLARS	CENTS	DOLLARS	CENTS
1505.1	Mobilization	Lump Sum	All Req'd	LUMP	SUM		
1550.1	Traffic Control	Lump Sum	All Req'd	LUMP	SUM		
1570.1	Erosion and Sediment Control	Lump Sum	All Req'd	LUMP	SUM		
2202.1	Sideslopes and Ditch Grading	Lump Sum	All Req'd	LUMP	SUM		
2202.2	Road Cleaning and Mining Area Restoration Gurantee	Contingent Sum	All Req'd	Contingent	Sum	$ 5,000	00
2204.1	Base Course, Grading D-1	Ton	338				
2401.1	Locate Sanitary Sewer Services	Lump Sum	All Req'd	LUMP	SUM		
2401.2	Sanitary Sewer Pipe, 4-Inch PVC	LF	207				
2401.3	Sanitary Sewer Pipe, 8-Inch PVC	LF	281				
2401.4	Sanitary Sewer Cleanout	Each	4				
2402.1	Sanitary Sewer Manhole, Type I With Fiberglass Base Liner	Each	1				
2402.2	Sanitary Sewer Manhole, Drop Inlet With Fiberglass Base Liner	Each	2				
2501.1	12-Inch Pipe Culvert	LF	15				
2601.1	16-Inch HDPE Water Pipe	LF	570				
2601.2	Connect to Existing Water Pipe	Each	2				
2601.3	Corrosion Protection	Each	6				
2601.4	Temporary Water System	Lump Sum	All Req'd	LUMP	SUM		
2602.1	16-Inch Butterfly Valve	Each	4				
2603.1	Fire Hydrant Assembly with Access Pad	Each	1				
2605.1	Bartlett House 6-Inch Water Service	Each	1				
2605.2	AEL&P 2-Inch Water Service Removal and Reconnection	Each	1				
2607.1	Pipe Insulation	Board	30				
2702.1	Construction Surveying	Lump Sum	All Req'd	LUMP	SUM		
2707.1	Remove and Reset Chain Link Fence	LF	16				
2709.1	Topsoil	CY	29				
2709.2	Topsoil Finish Grading	MH	14				
2710.1	Seeding, Hydraulic Method, Type III	SU	1				
2716.1	Remove and Dispose of Storm and Sanitary Sewer Pipe	Lump Sum	All Req'd	LUMP	SUM		
2716.2	Remove and Dispose of Existing Water Pipe or Fill With Slurry	Lump Sum	All Req'd	LUMP	SUM		
2717.1	Remove and Dispose of Sanitary Sewer Structures	Lump Sum	All Req'd	LUMP	SUM		
2722.1	Utility Conduit Relocation	Each	20				
2801.1	A.C. Pavement, Type II-A, Class B	Ton	112				
2801.2	A.C. Pavement for Sidewalks and Hydrant Pads	SY	94				
2806.1	Remove Existing Asphalt Surfacing	SY	495				

TOTAL BID $ _____

COMPANY NAME: _____

SECTION 00320 - BID BOND

KNOW ALL PERSONS BY THESE PRESENTS, that_____

_____ as Principal, and _____

as Surety, are held and firmly bound unto **THE CITY AND BOROUGH OF JUNEAU** hereinafter called "OWNER," in the sum of _____

_____dollars, (not less than five percent of the total amount of the Bid) for the payment of which sum, well and truly to be made, we bind ourselves, our heirs, executors, administrators, successors, and assigns, jointly and severally, firmly by these presents.

WHEREAS, said Principal has submitted a Bid to said OWNER to perform the WORK required under the Bid Schedule of the OWNER's Contract Documents entitled.

Bartlett Regional Hospital Water and Sewer Upgrades
Contract No. BE22-185

NOW THEREFORE, if said Principal is awarded a contract by said OWNER and, within the time and in the manner required in the "Notice Inviting Bids" and the "Instructions to Bidders" enters into a written Agreement on the form of Agreement bound with said Contract Documents, furnishes the required certificates of insurance, and furnishes the required Performance Bond and Payment Bond, then this obligation shall be null and void, otherwise it shall remain in full force and effect. In the event suit is brought upon this bond by said OWNER and OWNER prevails, said Surety shall pay all costs incurred by said OWNER in such suit, including a reasonable attorney's fee to be fixed by the court.

SIGNED AND SEALED, this _____ day of _____, 20___

(SEAL)_____ (SEAL)_____
(Principal) (Surety)

By:_____ By:_____
(Signature) (Signature)

END OF SECTION

SECTION 00360 - SUBCONTRACTOR REPORT

LIST OF SUBCONTRACTORS (AS 36.30.115)

The apparent low Bidder must submit a list of Subcontractors that the Bidder proposes to use in the performance of this contract ***on the fifth business day*** following the Posting Notice of Bids. If the fifth day falls on a weekend or holiday, the report is due by close of business on the next business Day following the weekend or holiday. The Subcontractor Report list must include each Subcontractor's name, address, location, evidence of valid Alaska Business License, and valid Alaska Contractor's Registration under AS 08.18. ***If no Subcontractors are to be utilized in the performance of the WORK, write in ink or type "NONE" on line (1) below.***

	SUBCONTRACTOR ADDRESS	[1] AK Contractor License No. [2] AK Business License No.	[1] Contact Name [2] Phone No.	Type of Work	Contract Amount	✓ if DBE
1.		[1] [2]			$	☐
2.		[1] [2]			$	☐
3.		[1] [2]			$	☐
4.		[1] [2]			$	☐

I certify that the above listed Alaska Business License(s) and CONTRACTOR Registration(s), if applicable, were valid at the time Bids were opened for this Project.

_____
CONTRACTOR, Authorized Signature

_____
CONTRACTOR, Printed Name

_____
COMPANY

SECTION 00360 - SUBCONTRACTOR REPORT

A. A Bidder may replace a listed Subcontractor if the Subcontractor:

1. fails to comply with AS 08.18;
2. files for bankruptcy or becomes insolvent;
3. fails to execute a contract with the Bidder involving performance of the WORK for which the Subcontractor was listed and the Bidder acted in good faith;
4. fails to obtain bonding;
5. fails to obtain insurance acceptable to the OWNER;
6. fails to perform the contract with the Bidder involving work for which the Subcontractor was listed;
7. must be substituted in order for the CONTRACTOR to satisfy required state and federal affirmative action requirements;
8. refuses to agree or abide with the Bidder's labor agreement; or
9. is determined by the OWNER not to be responsible.
10. is not in "Good Standing" with the OWNER as required in Article 21.0 in Section 00100 – Instructions to Bidders.

B. If a Bidder fails to list a Subcontractor or lists more than one Subcontractor for the same portion of WORK, the Bidder shall be considered to have agreed to perform that portion of WORK without the use of a Subcontractor and to have represented the Bidder to be qualified to perform that WORK.

C. A Bidder who attempts to circumvent the requirements of this section by listing as a Subcontractor another contractor who, in turn, sublets the majority of the WORK required under the contract violates this section.

D. If a contract is awarded to a Bidder who violates this section, the OWNER may:

1. cancel the contract; or
2. after notice and a hearing, assess a penalty on the Bidder in an amount that does not exceed 10 percent of the value of the subcontract at issue.

E. On the Subcontractor Report, the apparent low Bidder must list all Subcontractors anticipated to perform WORK on the project.

F. An apparent low Bidder who fails to submit a completed Subcontractor Report within the time specified in this section may be found to be not a responsible Bidder and may be required to forfeit the Bid security. The OWNER will then consider the next lowest Bidder for award of the contract.

END OF SECTION

SECTION 00370 - CONTRACTOR'S FINANCIAL RESPONSIBILITY

To be considered, all bidders must complete and include this form ***at the time of the deadline for bids***. Attach additional sheets as necessary to respond to questions.

PROJECT: BARTLETT REGIONAL HOSPITAL WATER AND SEWER UPGRADES

As the General Contractor on this project, I intend to subcontract _____% of the total value of this contract.

A. EXPERIENCE

1. Have you ever failed to complete a contract due to insufficient resources?
[ ] No [ ] Yes If YES, explain:

_____
_____
_____
_____

2. Describe arrangements you have made to finance this work:

_____
_____
_____
_____

3. Have you had previous construction contracts or subcontracts with the City and Borough of Juneau?
[ ] Yes [ ] No

4. Describe your most recent or current contract, its completion date, and scope of work:

_____
_____
_____
_____
_____
_____

5. List below, and/or as an attachment to this questionnaire, other construction projects you have completed, dates of completion, scope of work, and total contract amount for each project completed in the past twelve months.

_____
_____
_____
_____
_____

6. Per Alaska Statute 36.90.210, on previously awarded public contracts (including contracts still in progress), have you ever failed to pay a subcontractor **or** material supplier **within eight working days** after receiving payment from the Owner (for projects occurring within the last 3 years)?

[ ] Yes [ ] No If yes, please attach a detailed explanation for **each** occurrence.

B. EQUIPMENT

1. Describe below, and/or as an attachment, the equipment you have available and intend to use for this project.

ITEM	QUANTITY	MAKE	MODEL	SIZE/CAPACITY	PRESENT MARKET VALUE

2. Do you propose to purchase any equipment for use on this project not listed on table B-1?
[ ] No [ ] Yes If YES, describe type, quantity, and approximate cost:

_____
_____
_____
_____

3. Do you propose to rent any equipment for this work not listed on table B-1?
[ ] No [ ] Yes If YES, describe type and quantity:

_____
_____
_____
_____
_____
_____

4. Is your bid based on firm offers for all materials necessary for this project?
[ ] Yes [ ] No If NO, please explain:

_____
_____
_____
_____
_____
_____

I hereby certify that the above statements are true and complete.

_____ _____
Contractor Name and Title of Person Signing

_____ _____
Signature Date

SECTION 00500 - AGREEMENT

THIS AGREEMENT is between THE CITY AND BOROUGH OF JUNEAU (hereinafter called OWNER) and _____ (hereinafter called CONTRACTOR) OWNER and CONTRACTOR, in consideration of the mutual covenants hereinafter set forth, agree as follows:

ARTICLE 1. WORK.

CONTRACTOR shall complete the WORK as specified or as indicated under the Bid Schedule of the OWNER's Bid Documents entitled **Contract No. BE22-185 Bartlett Regional Hospital Water and Sewer Upgrades.**

The WORK is generally described as follows: The WORK covered in the Contract Documents includes baes course grading D-1, removal and replacement of sanitary sewer manholes with fiberglass baes liner, removal and replacement of sanitary sewer pipe, installation of sanitary sewer service pipe and cleanouts, installation of 16" HDPE water main, installation of 16" butterfly valves, temporary water system, filling existing water main with slurry, installation of fire hydrant assembly, removal of fire hydrant assembly, 6-Inch water service to Bartlett House, asphalt pavement removal and replacement, chain link fence removal and resetting, topsoil and seeding, construction surveying, traffic control and other miscellaneous related WORK.

The WORK to be paid under this contract shall include the following: Total Bid as shown in Section 00310 - Bid Schedule.

ARTICLE 2. CONTRACT COMPLETION TIME.

Work Description	Completion Date
The 16" HDPE water line connection WORK on Hospital Drive and Salmon Creek Access Road including the 2-Inch AEL&P Water Service connection	Shall be completed and accepted within two (2) days of the beginning of the water shutdown period as established by AEL&P
All other WORK	July 1, 2022

ARTICLE 3. DATE OF AGREEMENT

The date of this Agreement will be the date of the last signature on page three of this section.

ARTICLE 4. LIQUIDATED DAMAGES.

OWNER and the CONTRACTOR recognize that time is of the essence of this Agreement and that the OWNER will suffer financial loss if the WORK is not completed within the time specified in Article 2 herein, plus any extensions thereof allowed in accordance with Article 12 of the General Conditions. They also recognize the delays, expense, and difficulties involved in proving in a legal proceeding the actual damages suffered by the OWNER if the WORK is not completed on time. Accordingly, instead of requiring any such proof, the OWNER and the CONTRACTOR agree that as liquidated damages for delay (but not as a penalty) the CONTRACTOR shall pay the OWNER **$750** for each Day that expires after the completion time specified in Article 2 herein. The amount of liquidated damages specified above is agreed to be a reasonable estimate based on all facts known as of the date of this Agreement.

ARTICLE 5. CONTRACT PRICE.

OWNER shall pay CONTRACTOR for completion of the WORK in accordance with the Contract Documents in the amount set forth in the Bid Schedule. The CONTRACTOR agrees to accept as full and complete payment for all WORK to be done in this contract for: **Contract No. BE22-185 Bartlett Regional Hospital**

Water and Sewer Upgrades those Unit Price amounts as set forth in the Bid Schedule in the Contract Documents for this Project.

The total amount of this contract shall be _____ ($ _____), except as adjusted in accordance with the provisions of the Bid Documents.

ARTICLE 6. PAYMENT PROCEDURES.

CONTRACTOR shall submit Applications for Payment in accordance with Article 14 of the General Conditions. Applications for Payment will be processed by the ENGINEER as provided in the General Conditions.

Progress payments will be paid in full in accordance with Article 14 of the General Conditions until ninety (90) percent of the Contract Price has been paid. The remaining ten (10) percent of the Contract Price may be retained, in accordance with applicable Alaska State Statutes, until final inspection, completion, and acceptance of the Project by the OWNER.

ARTICLE 7. CONTRACT DOCUMENTS.

The Contract Documents which comprise the entire Agreement between OWNER and CONTRACTOR concerning the WORK consist of this Agreement (pages 00500-1 to 00500-6, inclusive) and the following sections of the Contract Documents:

- Table of Contents (pages 00005-1, inclusive)
- Notice Inviting Bids (pages 00030-1 to 00030-2, inclusive).
- Instructions to Bidders (pages 00100-1 to 00100-10, inclusive).
- Bid (pages 00300-1 to 00300-2, inclusive).
- Bid Schedule (pages 00310-1, inclusive).
- Bid Bond (page 00320-1, inclusive) or Bid Security.
- Subcontractor Report (pages 00360-1 to 00360-2, inclusive).
- Contractor Financial Responsibility (pages 00370-1 to 00370-3, inclusive).
- Performance Bond (pages 00610-1 to 00610-2, inclusive).
- Payment Bond (pages 00620-1 to 00620-2, inclusive).
- Insurance Certificate(s).
- General Conditions (pages 00700-1 to 00700-48, inclusive).
- Supplementary General Conditions (pages 00800-1 to 00800-6, inclusive).
- Alaska Labor Standards, Reporting, and Prevailing Wage Determination (page 00830-1).
- Permits, (page 00852-1).
- Standard Details (page 00853-1).
- Special Provisions (pages 1 to 33 inclusive)
- Drawings consisting of 16 sheets, as listed in the Table of Contents.
- Addenda numbers _____ to ____, inclusive.
- Change Orders which may be delivered or issued after the Date of the Agreement and which are not attached hereto.

There are no Contract Documents other than those listed in this Article 7. The Contract Documents may only be amended by Change Order as provided in Paragraph 3.3 of the General Conditions.

ARTICLE 8. MISCELLANEOUS.

Terms used in this Agreement which are defined in Article 1 of the General Conditions will have the meanings indicated in the General Conditions.

ARTICLE 8. MISCELLANEOUS. (Cont'd.)

No assignment by a party hereto of any rights under or interests in the Contract Documents will be binding on another party hereto without the written consent of the party sought to be bound; and specifically but without limitation monies that may become due and monies that are due may not be assigned without such consent (except to the extent that the effect of this restriction may be limited by law), and unless specifically stated to the contrary in any written consent to an assignment, no assignment will release or discharge the assignor from any duty or responsibility under the Contract Documents.

OWNER and CONTRACTOR each binds itself, its partners, successors, assigns and legal representatives to the other party hereto, its partners, successors, assigns and legal representatives in respect of all covenants, agreements and obligations contained in the Contract Documents. This Agreement shall be governed by the laws of the State of Alaska. Jurisdiction shall be in the State of Alaska, First Judicial District.

IN WITNESS WHEREOF, OWNER and CONTRACTOR have caused this Agreement to be executed on the date listed below by OWNER.

OWNER:	**CONTRACTOR:**
City and Borough of Juneau	_____ (Company Name)
_____ (Signature)	_____ (Signature)
By: Duncan Rorie Watt, City & Borough Manager (Printed Name)	By: _____ (Printed Name, Authority or Title)
Date: _____	CONTRACTOR Signature Date: _____
OWNER's address for giving notices:	CONTRACTOR's address for giving notices:
155 South Seward Street	_____
Juneau, Alaska 99801	_____
907-586-0800 907-586-4530 (Telephone) (Fax)	_____ (Telephone) (Fax)
	_____ (E-mail address)

Contractor License No. _____

CERTIFICATE
(if Corporation)

STATE OF)
) SS:
COUNTY OF)

I HEREBY CERTIFY that a meeting of the Board of Directors of the

_____a corporation existing under the laws of

the State of_____, held on _____, 20____, the following resolution was duly passed and adopted:

> "RESOLVED, that _____, as _____ President of the Corporation, be and is hereby authorized to **execute the Agreement** with the CITY AND BOROUGH OF JUNEAU and this corporation and that the execution thereof, attested by the Secretary of the Corporation, and with the Corporate Seal affixed, shall be the official act and deed of this Corporation."

I further certify that said resolution is now in full force and effect.

IN WITNESS WHEREOF, I have hereunto set my hand and affixed the official seal of the

corporation this _____ day of _____, 20____.

_____
Secretary

(SEAL)

CERTIFICATE
(if Partnership)

STATE OF)
) SS:
COUNTY OF)

I HEREBY CERTIFY that a meeting of the Partners of the

_____ a partnership existing under the laws of the State

of _____, held on _____, 20___, the following resolution was duly passed and adopted:

"RESOLVED, that _____, as _____ of the Partnership, be and is hereby authorized to **execute the Agreement** with the CITY AND BOROUGH OF JUNEAU and this partnership and that the execution thereof, attested by the _____shall be the official act and deed of this Partnership."

I further certify that said resolution is now in full force and effect.

IN WITNESS WHEREOF, I have hereunto set my hand this _____, day of _____, 20_____.

_____
Secretary

(SEAL)

CERTIFICATE
(if Joint Venture)

STATE OF)
) SS:
COUNTY OF)

I HEREBY CERTIFY that a meeting of the Principals of the

_____ a joint venture existing under the laws of the

State of _____, held on _____, 20___, the following resolution was duly passed and adopted:

"RESOLVED, that _____, as _____ of the Joint Venture, be and is hereby authorized to **execute the Agreement** with the CITY AND BOROUGH OF JUNEAU and this joint venture and that the execution thereof, attested by the _____ shall be the official act and deed of this Joint Venture."

I further certify that said resolution is now in full force and effect.

IN WITNESS WHEREOF, I have hereunto set my hand this _____, day of _____, 20___.

_____
Secretary

(SEAL)

END OF SECTION

SECTION 00610 - PERFORMANCE BOND

KNOW ALL PERSONS BY THESE PRESENTS: That we _____
(Name of Contractor)
_____ a _____
(Corporation, Partnership, Individual)

hereinafter called "Principal" and _____
(Surety)
of _____, State of _____hereinafter called the "Surety," are held and firmly bound to the CITY AND BOROUGH of JUNEAU, ALASKA hereinafter called "OWNER,"
(Owner) (City and State)
for the penal sum of _____

_____dollars ($_____) in lawful money of the United States, for the payment of which sum well and truly to be made, we bind ourselves, our heirs, executors, administrators and successors, jointly and severally, firmly by these presents.

THE CONDITION OF THIS OBLIGATION is such that whereas, the CONTRACTOR has entered into a certain contract with the OWNER, the effective date of which is (CBJ Contracts Office to fill in effective date) _____, a copy of which is hereto attached and made a part hereof for the construction of:

Bartlett Regional Hospital Water and Sewer Upgrades
CBJ Contract No.BE22-185

NOW, THEREFORE, if the Principal shall truly and faithfully perform its duties, all the undertakings, covenants, terms, conditions, and agreements of said contract during the original term thereof, and any extensions thereof, which may be granted by the OWNER, with or without notice to the Surety, and if it shall satisfy all claims and demands incurred under such contract, and shall fully indemnify and save harmless the OWNER from all costs and damages which it may suffer by reason of failure to do so, and shall reimburse and repay the OWNER all outlay and expense which the OWNER may incur in making good any default, then this obligation shall be void; otherwise to remain in full force and effect.

PROVIDED, FURTHER, that the said Surety, for value received hereby stipulates and agrees that no change, extension of time, alteration or addition to the terms of the contract or to the WORK to be performed thereunder or the specifications accompanying the same shall in any wise affect its obligation on this bond, and it does hereby waive notice of any such change, extension of time, alteration or addition to the terms of the contract or to the WORK or to the Specifications.

PROVIDED, FURTHER, that no final settlement between the OWNER and the Principal shall abridge the right of any beneficiary hereunder, whose claim may be unsatisfied.

SECTION 00610 - PERFORMANCE BOND

Bartlett Regional Hospital Water and Sewer Upgrades
CBJ Contract No.BE22-185

IN WITNESS WHEREOF, this instrument is issued in two (2) identical counterparts, each one of which shall be deemed an original.

CONTRACTOR:

By:_____
(Signature)

_____
(Printed Name)

_____
(Company Name)

_____
(Mailing Address)

_____
(City, State, Zip Code)

SURETY:

By: _____ Date Issued:_____
(Signature of Attorney-in-Fact)

_____
(Printed Name)

_____
(Company Name)

_____
(Mailing Address)

_____
(City, State, Zip Code)

(Affix SURETY'S SEAL)

NOTE: If CONTRACTOR is Partnership, all Partners must execute bond.

END OF SECTION

SECTION 00620 - PAYMENT BOND

KNOW ALL PERSONS BY THESE PRESENTS: That we _____
(Name of Contractor)
_____ a _____
(Corporation, Partnership, Individual)

hereinafter called "Principal" and _____
(Surety)
of _____, State of _____hereinafter called the "Surety," are held and firmly bound to the CITY AND BOROUGH of JUNEAU, ALASKA hereinafter called "OWNER,"
(Owner) (City and State)
for the penal sum of _____

_____dollars ($_____) in lawful money of the United States, for the payment of which sum well and truly to be made, we bind ourselves, our heirs, executors, administrators and successors, jointly and severally, firmly by these presents.

THE CONDITION OF THIS OBLIGATION is such that whereas, the CONTRACTOR has entered into a certain contract with the OWNER, the effective date of which is (CBJ Contracts Office to fill in effective date) _____, a copy of which is hereto attached and made a part hereof for the construction of:

Bartlett Regional Hospital Water and Sewer Upgrades
CBJ Contract No.BE22-185

NOW, THEREFORE, if the Principal shall promptly make payment to all persons, firms, Subcontractors, and corporations furnishing materials for, or performing labor in the prosecution of the WORK provided for in such contract, and any authorized extension or modification thereof, including all amounts due for materials, lubricants, oil, gasoline, coal and coke, repairs on machinery, equipment and tools, consumed or used in connection with the construction of such WORK, and all insurance premiums on said work, and for all labor performed in such WORK, whether by Subcontractor or otherwise, then this obligation shall be void; otherwise to remain in full force and effect.

PROVIDED, FURTHER, that the said Surety, for value received hereby stipulates and agrees that no change, extension of time, alteration or addition to the terms of the contract or to the work to be performed thereunder or the specifications accompanying the same shall in any wise affect its obligation on this bond, and it does hereby waive notice of any such change, extension of time, alteration or addition to the terms of the contract or to the WORK or to the Specifications.

PROVIDED, FURTHER, that no final settlement between the OWNER and the Principal shall abridge the right of any beneficiary hereunder, whose claim may be unsatisfied.

Bartlett Regional Hospital Water and Sewer Upgrades
CBJ Contract No.BE22-185

IN WITNESS WHEREOF, this instrument is issued in two (2) identical counterparts, each one of which shall be deemed an original.

CONTRACTOR:

By:_____
(Signature)

_____
(Printed Name)

_____
(Company Name)

_____
(Mailing Address)

_____
(City, State, Zip Code)

SURETY:

By: _____ Date Issued:_____
(Signature of Attorney-in-Fact)

_____
(Printed Name)

_____
(Company Name)

_____
(Mailing Address)

_____
(City, State, Zip Code)

(Affix SURETY'S SEAL)

NOTE: If CONTRACTOR is Partnership, all Partners must execute bond.

END OF SECTION

SECTION 00700 - GENERAL CONDITIONS

TABLE OF CONTENTS
(Revised 03-2003)

ARTICLE 1 DEFINITIONS 00700-5

ARTICLE 2 PRELIMINARY MATTERS

2.1 Delivery of Bonds/Insurance Certificates 00700-9
2.2 Copies of Documents 00700-9
2.3 Commencement of Contract Time; Notice to Proceed 00700-9
2.4 Starting the WORK 00700-9
2.5 Pre-construction Conference 00700-9
2.6 Finalizing CONTRACTOR Submittals 00700-9

ARTICLE 3 CONTRACT DOCUMENTS: INTENT, AMENDING, REUSE

3.1 Intent 00700-10
3.2 Order of Precedence of Contract Documents 00700-10
3.3 Amending and Supplementing Contract Documents 00700-11
3.4 Reuse of Documents 00700-11

ARTICLE 4 AVAILABILITY OF LANDS; PHYSICAL CONDITIONS; REFERENCE POINTS

4.1 Availability of Lands 00700-11
4.2 Physical Conditions - Subsurface and Existing Structures 00700-11
4.3 Differing Site Conditions 00700-12
4.4 Physical Conditions - Underground Utilities 00700-12
4.5 Reference Points 00700-13
4.6 Use of the CBJ/State Lemon Creek Gravel Pit 00700-13

ARTICLE 5 BONDS AND INSURANCE

5.1 Performance, Payment and Other Bonds 00700-14
5.2 Insurance 00700-15

ARTICLE 6 CONTRACTOR'S RESPONSIBILITIES

6.1 Supervision and Superintendence 00700-17
6.2 Labor, Materials, and Equipment 00700-17
6.3 Adjusting Progress Schedule 00700-18
6.4 Substitutes or "Or Equal" Items 00700-19
6.5 Concerning Subcontractors, Suppliers and Others 00700-19
6.6 Permits 00700-19
6.7 Patent Fees and Royalties 00700-20
6.8 Laws and Regulations 00700-20

ARTICLE 6 CONTRACTOR'S RESPONSIBILITIES (Cont'd.)

6.9 Taxes 00700-20
6.10 Use of Premises 00700-20
6.11 Safety and Protection 00700-21
6.12 Shop Drawings and Samples 00700-22
6.13 Continuing the WORK 00700-22
6.14 Indemnification 00700-22
6.15 Contractor's Daily Reports 00700-23
6.16 Assignment of Contract 00700-23
6.17 Contractor's Responsibility for Utility Property and Services 00700-23
6.18 Operating Water System Valves 00700-24
6.19 CONTRACTOR's WORK Schedule Limitations 00700-24

ARTICLE 7 OTHER WORK

7.1 Related WORK at Site 00700-24
7.2 Coordination 00700-25

ARTICLE 8 OWNER'S RESPONSIBILITIES

8.1 Communications 00700-25
8.2 Payments 00700-25
8.3 Lands, Easements, and Surveys 00700-25
8.4 Change Orders 00700-25
8.5 Inspections and Tests 00700-25
8.6 Suspension of WORK 00700-25
8.7 Termination of Agreement 00700-25

ARTICLE 9 ENGINEER'S STATUS DURING CONSTRUCTION

9.1 OWNER 's Representative 00700-25
9.2 Visits to Site 00700-25
9.3 Project Representation 00700-26
9.4 Clarifications and Interpretations 00700-28
9.5 Authorized Variations in WORK 00700-28
9.6 Rejecting Defective WORK 00700-28
9.7 CONTRACTOR Submittals, Change Orders, and Payments 00700-28
9.8 Decisions on Disputes 00700-28
9.9 Limitation on Engineer's Responsibilities 00700-29

SECTION 00700 - GENERAL CONDITIONS

ARTICLE 10 CHANGES IN THE WORK

10.1 General 00700-30
10.2 Allowable Quantity Variations 00700-30

ARTICLE 11 CHANGE OF CONTRACT PRICE

11.1 General 00700-31
11.2 Costs Relating to Weather 00700-31
11.3 Cost of WORK (Based on Time and Materials) 00700-32
11.4 CONTRACTOR's Fee 00700-34
11.5 Excluded Costs 00700-35

ARTICLE 12 CHANGE OF CONTRACT TIME

12.1 General 00700-36
12.2 Extensions of Time for Delay Due to Weather 00700-36

ARTICLE 13 WARRANTY AND GUARANTEE; TESTS AND INSPECTIONS; CORRECTION, REMOVAL, OR ACCEPTANCE OF DEFECTIVE WORK

13.1 Warranty and Guarantee 00700-37
13.2 Access to WORK 00700-37
13.3 Tests and Inspections 00700-37
13.4 OWNER May Stop the WORK 00700-38
13.5 Correction or Removal of Defective WORK 00700-38
13.6 One Year Correction Period 00700-39
13.7 Acceptance of Defective WORK 00700-39

ARTICLE 14 PAYMENTS TO CONTRACTOR AND COMPLETION

14.1 Schedule of Values (Lump Sum Price Breakdown) 00700-39
14.2 Unit Price Bid Schedule 00700-39
14.3 Application for Progress Payment 00700-39
14.4 CONTRACTOR's Warranty of Title 00700-40
14.5 Review of Applications for Progress Payment 00700-40
14.6 Partial Utilization 00700-41
14.7 Substantial Completion 00700-41
14.8 Final Application for Payment 00700-41
14.9 Final Payment and Acceptance 00700-42
14.10 Release of Retainage and Other Deductions 00700-42
14.11 CONTRACTOR's Continuing Obligation 00700-42
14.12 Final Payment Terminates Liability of OWNER 00700-43

ARTICLE 15 SUSPENSION OF WORK AND TERMINATION

15.1 Suspension of WORK by OWNER 00700-43
15.2 Termination of Agreement by OWNER (CONTRACTOR Default) 00700-43
15.3 Termination of Agreement by OWNER (For Convenience) 00700-43
15.4 Termination of Agreement by CONTRACTOR 00700-44

ARTICLE 16 MISCELLANEOUS

16.1 Giving Notice 00700-44
16.2 Rights In and Use of Materials Found on the WORK 00700-44
16.3 Right to Audit 00700-45
16.4 Archaeological or Historical Discoveries 00700-45
16.5 Construction Over or Adjacent to Navigable Waters 00700-45
16.6 Gratuity and Conflict of Interest 00700-45
16.7 Suits of Law Concerning the WORK 00700-46
16.8 Certified Payrolls 00700-46
16.9 Prevailing Wage Rates 00700-46
16.10 Employment Reference 00700-47
16.11 Cost Reduction Incentive 00700-47

ARTICLE 1 DEFINITIONS

Wherever used in these General Conditions or in the Contract Documents the following terms have the meanings indicated which are applicable to both the singular and plural thereof. Where an entire word is capitalized in the definitions and is found not capitalized in the Contract Documents it has the ordinary dictionary definition.

Addenda - Written or graphic instruments issued prior to the opening of Bids which make additions, deletions, or revisions to the Contract Documents.

Agreement - The written contract between the OWNER and the CONTRACTOR covering the WORK to be performed; other documents are attached to the Agreement and made a part thereof as provided therein.

Application for Payment - The form furnished by the ENGINEER which is to be used by the CONTRACTOR to request progress or final payment and which is to be accompanied by such supporting documentation as is required by the Contract Documents.

Asbestos - Any material that contains more than one percent asbestos and is friable or is releasing asbestos fibers into the air above current action levels established by the United States Occupational Safety and Health Administration.

Bid - The offer or proposal of the Bidder submitted on the prescribed form setting forth the price or prices for the WORK.

Bonds - Bid, Performance, and Payment Bonds and other instruments which protect against loss due to inability or refusal of the CONTRACTOR to perform its contract.

CBJ Project Manager - The authorized representative of the City and Borough of Juneau Engineering Department, as OWNER, who is responsible for administration of the contract.

Change Order - A document recommended by the ENGINEER, which is signed by the CONTRACTOR and the OWNER and authorizes an addition, deletion, or revision in the WORK, or an adjustment in the Contract Price or the Contract Time, issued on or after the Effective Date of the Agreement.

Contract Documents - The Table of Contents, Notice Inviting Bids, Instructions to Bidders, Bid Forms (including the Bid, Bid Schedule(s), Information Required of Bidder, Bid Bond, and all required certificates and affidavits), Agreement, Performance Bond, Payment Bond, General Conditions, Supplementary General Conditions, Technical Specifications, Drawings, Permits, and all Addenda, and Change Orders executed pursuant to the provisions of the Contract Documents.

Contract Price - The total monies payable by the OWNER to the CONTRACTOR under the terms and conditions of the Contract Documents.

Contract Time - The number of successive calendar Days stated in the Contract Documents for the completion of the WORK.

CONTRACTOR - The individual, partnership, corporation, joint-venture or other legal entity with whom the OWNER has executed the Agreement.

Day - A calendar day of 24 hours measured from midnight to the next midnight.

Defective WORK - WORK that is unsatisfactory, faulty, or deficient; or that does not conform to the Contract Documents; or that does not meet the requirements of any inspection, reference standard, test, or approval referred to in the Contract Documents; or WORK that has been damaged prior to the ENGINEER's recommendation of final payment.

Drawings - The Drawings, plans, maps, profiles, diagrams, and other graphic representations which indicate the character, location, nature, extent, and scope of the WORK and which have been prepared by the ENGINEER and are referred to in the Contract Documents. Shop Drawings are not within the meaning of this paragraph.

Effective Date of the Agreement - The date indicated in the Agreement on which it becomes effective, but if no such date is indicated it means the date on which the Agreement is signed and delivered by the last of the two parties to sign and deliver.

Engineer of Record - The individual, partnership, corporation, joint-venture or other legal entity named as such in the Contract Documents.

ENGINEER - The ENGINEER is the firm or person(s) selected by the City and Borough of Juneau (CBJ) to perform the duties of project inspection and management. CBJ will inform the CONTRACTOR of the identity of the ENGINEER at or before the Notice to Proceed.

Field Order - A written order issued by the ENGINEER which may or may not involve a change in the WORK.

General Requirements - Division 1 of the Technical Specifications.

Hazardous Waste - The term Hazardous Waste shall have the meaning provided in Section 1004 of the Solid Waste Disposal Act (42 USC Section 9603) as amended from time to time.

Holidays - The CBJ legal holidays occur on:

1. New Year's Day - January 1
2. Martin Luther King's Birthday - Third Monday in January
3. President's Day - Third Monday in February
4. Seward's Day - Last Monday in March
5. Memorial Day - Last Monday in May
6. Independence Day - July 4
7. Labor Day - First Monday in September
8. Alaska Day - October 18
9. Veteran's Day - November 11
10. Thanksgiving Day - Fourth Thursday and the following Friday in November
11. Christmas Day – December 25

If any holiday listed above falls on a Saturday, Saturday and the preceding Friday are both legal holidays. If the holiday should fall on a Sunday, Sunday and the following Monday are both legal holidays.

Inspector - The authorized representative of the ENGINEER assigned to make detailed inspections for conformance to the Contract Documents. Any reference to the Resident Project Representative in this document shall mean the Inspector.

Laws and Regulations; Laws or Regulations - Any and all applicable laws, rules, regulations, ordinances, codes, and/or orders of any and all governmental bodies, agencies, authorities and courts having jurisdiction.

Mechanic's Lien - A form of security, an interest in real property, which is held to secure the payment of an obligation. When referred to in these Contract Documents, "Mechanic's Lien" or "lien" means "Stop Notice".

Milestone - A principal event specified in the Contract Documents relating to an intermediate completion date of a portion of the WORK, or a period of time within which the portion of the WORK should be performed prior to Substantial Completion of all the WORK.

Notice of Award - The written notice by the OWNER to the apparent successful bidder stating that the apparent successful bidder has complied with all conditions for award of the contract.

Notice of Completion - A form signed by the ENGINEER and the CONTRACTOR recommending to the OWNER that the WORK is Substantially Complete and fixing the date of Substantial Completion. After acceptance of the WORK by the OWNER's governing body, the form is signed by the OWNER and filed with the County Recorder. This filing starts the 30-day lien filing period on the WORK.

Notice to Proceed - The written notice issued by the OWNER to the CONTRACTOR authorizing the CONTRACTOR to proceed with the WORK and establishing the date of commencement of the Contract Time.

Notice of Intent to Award - The written notice by the OWNER to the apparent successful bidder stating that upon compliance by the apparent successful bidder with the requirements listed therein, within the time specified, the OWNER will enter into an Agreement.

OWNER - The City and Borough of Juneau (CBJ), acting through its legally designated officials, officers, or employees.

Partial Utilization - Use by the OWNER or a substantially completed part of the WORK for the purpose for which it is intended prior to Substantial Completion of all the WORK.

PCB's - Polychlorinated biphenyls.

PERMITTEE – See definition for CONTRACTOR.

Petroleum - Petroleum, including crude oil or any fraction thereof which is liquid at standard conditions of temperature and pressure (60 degrees Fahrenheit and 14.7 pounds per square inch absolute), such as oil, petroleum, fuel oil, oil sludge, oil refuse, gasoline, kerosene, and oil mixed with other non-Hazardous Wastes and crude oils.

Project - The total construction of which the WORK to be provided under the Contract Documents may be the whole, or a part as indicated elsewhere in the Contract Documents.

Radioactive Material - Source, special nuclear, or byproduct material as defined by the Atomic Energy Act of 1954 (42 USC Section 2011 et seq.) as amended from time to time.

Shop Drawings - All Drawings, diagrams, illustrations, schedules and other data which are specifically prepared by or for the CONTRACTOR and submitted by the CONTRACTOR, to the ENGINEER, to illustrate some portion of WORK.

Specifications - Same definition as "Technical Specifications" hereinafter.

Stop Notice - A legal remedy for Subcontractors and suppliers who contribute to public works, but who are not paid for their WORK, which secures payment from construction funds possessed by the OWNER. For public property, the Stop Notice remedy is designed to substitute for mechanic's lien rights.

Sub-Consultant - The individual, partnership, corporation, joint-venture or other legal entity having a direct contract with ENGINEER, or with any of its Consultants to furnish services with respect to the Project.

Subcontractor - An individual, partnership, corporation, joint-venture or other legal entity having a direct contract with the CONTRACTOR, or with any of its Subcontractors, for the performance of a part of the WORK at the site.

Substantial Completion - Refers to when the WORK has progressed to the point where, in the opinion of the ENGINEER as evidenced by Notice of Completion as applicable, it is sufficiently complete, in accordance with the Contract Documents, so that the WORK can be utilized for the purposes for which it is intended; or if no such notice is issued, when final payment is due in accordance with Paragraph 14.8. The terms "substantially complete" and "substantially completed" as applied to any WORK refer to substantial completion thereof.

Supplementary General Conditions (SGC) - The part of the Contract Documents which make additions, deletions, or revisions to these General Conditions.

Supplier - A manufacturer, fabricator, supplier, distributor, materialman, or vendor.

Technical Specifications - Divisions 1 through 16 of the Contract Documents consisting of the General Requirements and written technical descriptions of products and execution of the WORK.

Underground Utilities - All pipelines, conduits, ducts, cables, wires, manholes, vaults, tanks, tunnels, or other such facilities or attachments, and any encasements containing such facilities which have been installed underground to furnish any of the following services or materials: water, sewage and drainage removal, electricity, gases, steam, liquid petroleum products, telephone or other communications, cable television, traffic, or other control systems.

WORK, Work - The entire completed construction or the various separately identifiable parts thereof required to be furnished under the Contract Documents. WORK is the result of performing, or furnishing labor and furnishing and incorporating materials and equipment into the construction, and performing or furnishing services and furnishing documents, all as required by the Contract Documents.

ARTICLE 2 PRELIMINARY MATTERS

2.1 DELIVERY OF BONDS/INSURANCE CERTIFICATES. When the CONTRACTOR delivers the signed Agreements to the OWNER, the CONTRACTOR shall also deliver to the OWNER such Bonds and Insurance Policies and Certificates as the CONTRACTOR may be required to furnish in accordance with the Contract Documents.

2.2 COPIES OF DOCUMENTS. The OWNER shall furnish to the CONTRACTOR the required number of copies of the Contract Documents specified in the Supplementary General Conditions.

2.3 COMMENCEMENT OF CONTRACT TIME; NOTICE TO PROCEED. The Contract Time will start to run on the commencement date stated in the Notice to Proceed.

2.4 STARTING THE WORK

A. The CONTRACTOR shall begin to perform the WORK within 10 days after the commencement date stated in the Notice to Proceed, but no WORK shall be done at the site prior to said commencement date.

B. Before undertaking each part of the WORK, the CONTRACTOR shall carefully study and compare the Contract Documents and check and verify pertinent figures shown thereon and all applicable field measurements. The CONTRACTOR shall promptly report in writing to the ENGINEER any conflict, error, or discrepancy which the CONTRACTOR may discover and shall obtain a written interpretation or clarification from the ENGINEER before proceeding with any WORK affected thereby.

C. The CONTRACTOR shall submit to the ENGINEER for review those documents called for under Section 01300 - CONTRACTOR Submittals in the General Requirements.

2.5 PRE-CONSTRUCTION CONFERENCE. The CONTRACTOR is required to attend a Pre-Construction Conference. This conference will be attended by the ENGINEER and others as appropriate in order to discuss the WORK in accordance with the applicable procedures specified in the General Requirements, Section 01010 - Summary of WORK in the General Requirements.

2.6 FINALIZING CONTRACTOR SUBMITTALS. At least 7 days before submittal of the first Application for Payment a conference attended by the CONTRACTOR, the ENGINEER and others as appropriate will be held to finalize the initial CONTRACTOR submittals in accordance with the General Requirements. As a minimum the CONTRACTOR's representatives should include the project manager and schedule expert. The CONTRACTOR should plan on this meeting taking no less than 8 hours. If the submittals are not finalized at the end of the meeting, additional meetings will be held so that the submittals can be finalized prior to the submittal of the first application for payment. No application for payment will be processed until CONTRACTOR submittals are finalized.

ARTICLE 3 CONTRACT DOCUMENTS: INTENT, AMENDING, REUSE

3.1 INTENT

A. The Contract Documents comprise the entire Agreement between the OWNER and the CONTRACTOR concerning the WORK. The Contract Documents shall be construed as a whole in accordance with Alaska Law.

B. It is the intent of the Contract Documents to describe the WORK, functionally complete, to be constructed in accordance with the Contract Documents. Any work, materials, or equipment that may reasonably be inferred from the Contract Documents as being required to produce the intended result shall be supplied whether or not specifically called for. When words or phrases which have a well-known technical or construction industry or trade meaning are used to describe work, materials, or equipment such words or phrases shall be interpreted in accordance with that meaning, unless a definition has been provided in Article 1 of the General Conditions. Reference to standard specifications, manuals, or codes of any technical society, organization, or association, or to the Laws or Regulations of any governmental authority, whether such reference be specific or by implication, shall mean the latest standard specification, manual, code, or Laws or Regulations in effect at the time of opening of Bids, except as may be otherwise specifically stated. However, no provision of any referenced standard specification, manual, or code (whether or not specifically incorporated by reference in the Contract Documents) shall be effective to change the duties and responsibilities of the OWNER, the CONTRACTOR, or the ENGINEER or any of their consultants, agents, or employees from those set forth in the Contract Documents.

C. If, during the performance of the WORK, CONTRACTOR discovers any conflict, error, ambiguity or discrepancy within the Contract Documents or between the Contract Documents and any provision of any such Law or Regulation applicable to the performance of the WORK or of any such standard, specification, manual or code or of any instruction of any Supplier referred to in paragraph 6.5, the CONTRACTOR shall report it to the ENGINEER in writing at once, and the CONTRACTOR shall not proceed with the WORK affected thereby (except in an emergency as authorized by the ENGINEER) until a clarification field order, or Change Order to the Contract Documents has been issued.

3.2 ORDER OF PRECEDENCE OF CONTRACT DOCUMENTS

A. In resolving conflicts resulting from, errors, or discrepancies in any of the Contract Documents, the order of precedence shall be as follows:

1. Permits from other agencies as may be required by law, excepting the definition of “PERMITEE” in these permits.
2. Field Orders
3. Change Orders
4. ENGINEER’s written interpretations and clarifications.
5. Agreement
6. Addenda
7. CONTRACTOR's Bid (Bid Form)
8. Supplementary General Conditions
9. Notice Inviting Bids

10. Instructions to Bidders
11. General Conditions
12. Technical Specifications
13. Drawings

B. With reference to the Drawings the order of precedence is as follows:

1. Figures govern over scaled dimensions
2. Detail Drawings govern over general Drawings
3. Addenda/ Change Order drawings govern over Contract Drawings
4. Contract Drawings govern over standard drawings

3.3 AMENDING AND SUPPLEMENTING CONTRACT DOCUMENTS. The Contract Documents may be amended to provide for additions, deletions, and revisions in the WORK or to modify the terms and conditions thereof by a Change Order (pursuant to Article 10 CHANGES IN THE WORK).

3.4 REUSE OF DOCUMENTS. Neither the CONTRACTOR, nor any Subcontractor or Supplier, nor any other person or organization performing any of the WORK under a contract with the OWNER shall have or acquire any title to or ownership rights in any of the Drawings, Technical Specifications, or other documents used on the WORK, and they shall not reuse any of them on the extensions of the Project or any other project without written consent of the OWNER.

ARTICLE 4 AVAILABILITY OF LANDS; PHYSICAL CONDITIONS; REFERENCE POINTS

4.1 AVAILABILITY OF LANDS. The OWNER shall furnish, as indicated in the Contract Documents, the lands upon which the WORK is to be performed, rights-of-way and easements for access thereto, and such other lands which are designated for the use of the CONTRACTOR. Easements for permanent structures or permanent changes in existing facilities will be obtained and paid for by the OWNER, unless otherwise provided in the Contract Documents. Nothing contained in the Contract Documents shall be interpreted as giving the CONTRACTOR exclusive occupancy of the lands or rights-of-way provided. The CONTRACTOR shall provide for all additional lands and access thereto that may be required for temporary construction facilities or storage of materials and equipment; provided, that the CONTRACTOR shall not enter upon nor use any property not under the control of the OWNER until a written temporary construction easement, lease or other appropriate agreement has been executed by the CONTRACTOR and the property owner, and a copy of said agreement furnished to the ENGINEER prior to said use; and, neither the OWNER nor the ENGINEER shall be liable for any claims or damages resulting from the CONTRACTOR's unauthorized trespass or use of any such properties.

4.2 PHYSICAL CONDITIONS - SUBSURFACE AND EXISTING STRUCTURES

A. Explorations and Reports. Reference is made to SGC 4.2 Physical Conditions of the Supplementary General Conditions for identification of those reports of explorations and tests of sub-surface conditions at the site that have been utilized by the ENGINEER in the preparation of the Contract Documents. The CONTRACTOR may rely upon the accuracy of the technical data contained in such reports, however, reports are not to be considered complete or comprehensive and nontechnical data, interpretations, and opinions contained in such reports are not to be relied on by the CONTRACTOR. The CONTRACTOR is

responsible for any further explorations or tests that may be necessary and any interpretation, interpolation, or extrapolation that it makes of any information shown in such reports.

B. Existing Structures. Reference is made to SGC 4.2 Physical Conditions of the Supplementary General Conditions for identification of those drawings of physical conditions in or relating to existing surface and subsurface structures (except Underground Utilities referred to in Paragraph 4.4 herein) which are at or contiguous to the site that have been utilized by the ENGINEER in the preparation of the Contract Documents. The CONTRACTOR may rely upon the accuracy of the technical data contained in such drawings, however, nontechnical data, interpretations, and opinions contained in such drawings are not to be relied on by the CONTRACTOR. The CONTRACTOR is also responsible for any interpretation, interpolation, or extrapolation that it makes of any information shown in such drawings.

4.3 DIFFERING SITE CONDITIONS

A. The CONTRACTOR shall promptly upon discovery (but in no event later than 14 days thereafter) and before the following conditions are disturbed, notify the ENGINEER, in writing of any:

1. Material that the CONTRACTOR believes may be material that is hazardous waste, as defined in Article 1 of these General Conditions, or asbestos, PCB's, petroleum or any other substance or material posing a threat to human or to the environment.
2. Subsurface or latent physical conditions at the site differing from those indicated.
3. Unknown physical conditions at the site of any unusual nature, different materially from those ordinarily encountered and generally recognized as inherent in WORK of the character provided for in the contract.

B. The OWNER shall promptly investigate the conditions, and if it finds that the conditions do materially so differ, or do involve hazardous waste, and cause a decrease or increase in the CONTRACTOR's cost of, or the time required for, performance of any part of the WORK shall issue a Change Order under the procedures described in the contract.

C. In the event that a dispute arises between the OWNER and the CONTRACTOR whether the conditions materially differ, or involved hazardous waste or other materials listed above, or cause a decrease or increase in the CONTRACTOR's cost of, or time required for, performance of any part of the WORK, the CONTRACTOR shall not be excused from any scheduled completion date provided for by the contract, but shall proceed with all WORK to be performed under the contract. The CONTRACTOR shall retain any and all rights provided either by contract or by Law which pertain to the resolution of disputes and protests between the contracting parties.

4.4 PHYSICAL CONDITIONS - UNDERGROUND UTILITIES

A. Indicated. The information and data indicated in the Contract Documents with respect to existing Underground Utilities at or contiguous to the site are based on information and data furnished to the OWNER or the ENGINEER by the owners of such Underground Utilities or by others. Unless it is expressly provided in the Supplementary General Conditions and/or Section 01530 - Protection and Restoration of Existing Facilities of the General Requirements, the OWNER and the ENGINEER shall not be responsible for the accuracy or

completeness of any such information or data, and the CONTRACTOR shall have full responsibility for reviewing and checking all such information and data, for locating all Underground Utilities indicated in the Contract Documents, for coordination of the WORK with the owners of such Underground Utilities during construction, for the safety and protection thereof and repairing any damage thereto resulting from the WORK, the cost of which will be considered as having been included in the Contract Price.

B. Not Indicated. If an Underground Utility is uncovered or revealed at or contiguous to the site which was not indicated in the Contract Documents and which the CONTRACTOR could not reasonably have been expected to be aware of, the CONTRACTOR shall identify the owner of such Underground Utility and give written notice thereof to that owner and shall notify the ENGINEER in accordance with the requirements of the Supplementary General Conditions and Section 01530 - Protection and Restoration of Existing Facilities of the General Requirements.

4.5 REFERENCE POINTS

A. The ENGINEER will provide one bench mark, near or on the site of the WORK, and will provide two points near or on the site to establish a base line for use by the CONTRACTOR for alignment control. Unless otherwise specified in the General Requirements, the CONTRACTOR shall furnish all other lines, grades, and bench marks required for proper execution of the WORK.

B. The CONTRACTOR shall preserve all bench marks, stakes, and other survey marks, and in case of their removal or destruction by its own employees or by its Subcontractor's employees, the CONTRACTOR shall be responsible for the accurate replacement of such reference points by personnel qualified under the Alaska Statute governing the licensing of Architects, Engineers, and Land Surveyors.

4.6 USE OF THE CBJ/STATE LEMON CREEK GRAVEL PIT

A. On City and Borough of Juneau (CBJ) construction projects, the CBJ may make unclassified material available to CONTRACTORs, from the CBJ/State Lemon Creek gravel pit, at a rate less than charged other customers. CONTRACTORs are not required to use material from the CBJ/State pit and the CBJ makes no guarantee as to the quantity or quality of the available material. For this Project, contact Alec Venechuk, CBJ Material Source Manager, at (907) 586-0874 for the current material rates.

B. CONTRACTORs proposing to use gravel from the CBJ/State pit are required to be in good standing for all amounts owed to the CBJ, for previous gravel operations, prior to submitting a mining plan for approval. CONTRACTORs using the pit must comply with Allowable Use Permit USE 2008-00061. Failure to meet these requirements, if so subject, shall be sufficient reason to deny use of the CBJ/State pit as a gravel source. To determine if your company is subject to these requirements, contact the CBJ Engineering Department, Gravel Pit Management, at (907) 586-0874.

C. CONTRACTORs deciding to use material from the CBJ/State pit shall provide an Individual Mining Plan prepared by a professional engineer registered in the State of Alaska. The Individual Mining Plan must be reviewed and approved by the CBJ, prior to commencing

operations within the pit. CONTRACTORs shall also secure a Performance Bond to ensure compliance with contract provisions, including any Individual Mining Plan stipulations. The bond shall remain in full force and effect until a release is obtained from the CBJ.

D. If CONTRACTOR operations for a project do not exceed 500 tons of material, the CONTRACTOR will not be required to provide an Individual Mining Plan prepared by an engineer. However, the CONTRACTOR must submit an Individual Mining Plan that is in compliance with Allowable Use Permit USE 2008-00061 for gravel extraction within the CBJ/State pit. The CONTRACTOR must contact the CBJ Engineering Department for conditions for the extraction.

E. CONTRACTORs using the CBJ material may do primary dry separation (screening) of materials within the pit. Crushing and washing of material will not be allowed. CONTRACTORs shall account for placement of materials removed from the pit. The CBJ may require CONTRACTORs to cross-check weight tickets, submit to an audit, or participate in other measures required by the CBJ to ensure accountability. Unprocessed overburden removed from the pit will not be weighed. All other material mined will be weighed at the CBJ scale. CONTRACTORs will be responsible for loading and/or screening their own material. If asphalt pavement is removed as part of the WORK, CONTRACTORs shall dispose of the material at a to-be-specified location within the pit area, as directed by the CBJ Project Manager.

F. The gravel pit overhead charge shall be paid to the CBJ by the CONTRACTOR within 60 days after removal of all materials from the pit and prior to requesting and/or receiving final payment. Upon completion of each excavation CONTRACTORs shall notify the CBJ, in writing, in sufficient time to perform a field-compliance examination prior to vacating the pit. Any significant deviation from the stipulations of the Individual Mining Plan identified during the field inspection shall be corrected by the CONTRACTOR prior to release of the bond. A signed release from CBJ will be required prior to releasing the CONTRACTOR's bond.

G. If asphalt pavement is removed as part of this WORK, the CONTRACTOR shall dispose of the material at the location designated as the Asphalt Storage Facility, or as directed by the ENGINEER.

H. The CBJ/State pit is a seasonal operation. The hours of operation are from 7:00 a.m. to 6:00 p.m., Monday through Friday, from April 1 through October 15 of the year. CONTRACTORS may obtain gravel on weekends, or during the off-season, by applying for a separate agreement with the City and Borough of Juneau Engineering Department. The CONTRACTOR will be responsible for any additional costs incurred during weekend or off-season operations at the gravel pit.

I. All Contractors/Equipment Operators using the CBJ/State Pit shall be in compliance with Federal Mine Safety and Health Administration regulations for quarry and gravel operations.

ARTICLE 5 BONDS AND INSURANCE

5.1 PERFORMANCE, PAYMENT, AND OTHER BONDS

A. The CONTRACTOR shall furnish, when required, Performance and Payment Bonds on forms provided by the CBJ for the penal sums of 100% of the amount of the Bid award. The surety on each bond may be any corporation or partnership authorized to do business in the State of Alaska as an insurer under AS 21.09. These bonds shall remain in effect for 12 months after the date of final payment and until all obligations and liens under this contract have been satisfied. The CONTRACTOR shall also furnish such other Bonds as are required by the Supplementary General Conditions. All Bonds shall be in the form prescribed by the Contract Documents except as provided otherwise by Laws or Regulations, and shall be executed by such sureties as are named in the current list of "Companies Holding Certificates of Authority as Acceptable Sureties on Federal Bonds and as Acceptable Reinsuring Companies" as published in Circular 570 (amended) by the Audit Staff, Bureau of Government Financial Operations, U.S. Treasury Department. All Bonds signed by an agent must be accompanied by a certified copy of such agent's authority to act.

B. If the surety on any Bond furnished by the CONTRACTOR is declared bankrupt or becomes insolvent or its right to do business is terminated in any state where any part of the WORK is located, the CONTRACTOR shall within 7 days thereafter substitute another Bond and Surety, which must be acceptable to the OWNER.

C. All Bonds required by the Contract Documents to be purchased and maintained by CONTRACTOR shall be obtained from surety companies that are duly licensed or authorized in the State of Alaska to issue Bonds for the limits so required. Such surety companies shall also meet such additional requirements and qualifications as may be provided in the Supplementary General Conditions. The City Engineer may, on behalf of the OWNER, notify the surety of any potential default or liability.

5.2 INSURANCE

A. The CONTRACTOR shall purchase and maintain the insurance required under this paragraph. Such insurance shall include the specific coverages set out herein and be written for not less than the limits of liability and coverages provided in the Supplementary General Conditions, or required by law, whichever are greater. All insurance shall be maintained continuously during the life of the Agreement up to the date of Final Completion and at all times thereafter when the CONTRACTOR may be correcting, removing, or replacing Defective WORK in accordance with Paragraph 13.6, but the CONTRACTOR's liabilities under this Agreement shall not be deemed limited in any way to the insurance coverage required.

B. All insurance required by the Contract Documents to be purchased and maintained by the CONTRACTOR shall be obtained from insurance companies that are duly licensed or authorized in the State of Alaska to issue insurance policies for the limits and coverages so required. Such insurance companies shall have a current Best's Rating of at least an "A" (Excellent) general policy holder's rating and a Class VII financial size category and shall also meet such additional requirements and qualifications as may be provided in the Supplementary General Conditions.

C. The CONTRACTOR shall furnish the OWNER with certificates showing the type, amount, class of operations covered, effective dates and dates of expiration of policies. All of the policies of insurance so required to be purchased and maintained (or the certificates or other

evidence thereof) shall contain a provision or endorsement that the coverage afforded will not be cancelled, reduced in coverage, or renewal refused until at least 30 days' prior written notice has been given to the OWNER by certified mail. All such insurance required herein (except for Workers' Compensation and Employer's Liability) shall name the OWNER, its Consultants and subconsultants and their officers, directors, agents, and employees as "additional insureds" under the policies. The CONTRACTOR shall purchase and maintain the following insurance:

1. Workers' Compensation and Employer's Liability. This insurance shall protect the CONTRACTOR against all claims under applicable state workers' compensation laws. The CONTRACTOR shall also be protected against claims for injury, disease, or death of employees which, for any reason, may not fall within the provisions of a Workers' Compensation law. This policy shall include an "all states" endorsement. The CONTRACTOR shall require each Subcontractor similarly to provide Workers' Compensation Insurance for all of the latter's employees to be engaged in such WORK unless such employees are covered by the protection afforded by the CONTRACTOR's Workers' Compensation Insurance. In case any class of employees is not protected, under the Workers' Compensation Statute, the CONTRACTOR shall provide and shall cause each Subcontractor to provide adequate employer's liability insurance for the protection of such of its employees as are not otherwise protected.
2. Commercial General Liability. This insurance shall be written in comprehensive form and shall protect the CONTRACTOR against all claims arising from injuries to persons other than its employees or damage to property of the OWNER or others arising out of any act or omission of the CONTRACTOR or its agents, employees, or Subcontractors. The policy shall contain no exclusions for any operations within the scope of this contract.
3. Comprehensive Automobile Liability. This insurance shall be written in comprehensive form and shall protect the CONTRACTOR against all claims for injuries to members of the public and damage to property of others arising from the use of motor vehicles, and shall cover operation on or off the site of all motor vehicles licensed for highway use, whether they are owned, non-owned, or hired. Coverage for hired motor vehicles should include endorsement covering liability assumed under this Agreement.
4. Subcontractor's Commercial General Liability Insurance and Commercial Automobile Liability Insurance. The CONTRACTOR shall either require each of its Subcontractors to procure and to maintain Subcontractor's Commercial General Liability and Property Damage Insurance and Vehicle Liability Insurance of the type and in the amounts specified in the Supplementary General Conditions or insure the activities of its Subcontractors in the CONTRACTOR's own policy, in like amount.
5. Builder's Risk. This insurance shall be of the "all risks" type, shall be written in completed value form, and shall protect the CONTRACTOR, the OWNER, and the ENGINEER, against risks of damage to buildings, structures, and materials and equipment. The amount of such insurance shall be not less than the insurable value of the WORK at completion. Builder's risk insurance shall provide for losses to be payable to the CONTRACTOR and the OWNER, as their interests may appear. The policy shall contain a provision that in the event of payment for any loss under the coverage provided, the insurance company shall have no rights of recovery against the

CONTRACTOR, the OWNER, and the ENGINEER. The Builder's Risk policy shall insure against all risks of direct physical loss or damage to property from any external cause including flood and earthquake. Allowable exclusions, if any, shall be as specified in the Supplementary General Conditions.

ARTICLE 6 CONTRACTOR'S RESPONSIBILITIES

6.1 SUPERVISION AND SUPERINTENDENCE

A. The CONTRACTOR shall supervise, inspect, and direct the WORK competently and efficiently, devoting such attention thereto and applying such skills and expertise as may be necessary to perform the WORK in accordance with the Contract Documents. The CONTRACTOR shall be solely responsible for the means, methods, techniques, sequences, and procedures of construction and safety precautions and programs incidental thereto. The CONTRACTOR shall be responsible to see that the completed WORK complies accurately with the Contract Documents.

B. The CONTRACTOR shall designate in writing and keep on the WORK site at all times during its progress a technically qualified, English-speaking superintendent, who is an employee of the CONTRACTOR and who shall not be replaced without written notice to the OWNER and the ENGINEER. The superintendent will be the CONTRACTOR's representative at the site and shall have authority to act on behalf of the CONTRACTOR. All communications given to the superintendent shall be as binding as if given to the CONTRACTOR. The CONTRACTOR shall issue all its communications to the OWNER through the ENGINEER and the ENGINEER only.

C. The CONTRACTOR's superintendent shall be present at the site of the WORK at all times while WORK is in progress. Failure to observe this requirement shall be considered suspension of the WORK by the CONTRACTOR until such time as such superintendent is again present at the site.

6.2 LABOR, MATERIALS, AND EQUIPMENT

A. The CONTRACTOR shall provide competent, suitably qualified personnel to survey and lay out the WORK and perform construction as required by the Contract Documents. The CONTRACTOR shall furnish, erect, maintain, and remove the construction plant and any temporary works as may be required. The CONTRACTOR shall at all times maintain good discipline and order at the site. Except in connection with the safety or protection of persons or the WORK or property at the site or adjacent thereto, and except as otherwise indicated in the Contract Documents, all WORK at the site shall be performed during regular working hours, and the CONTRACTOR will not permit overtime work or the performance of work on Saturday, Sunday, or any legal holiday without the OWNER's written consent. The CONTRACTOR shall apply for this consent through the ENGINEER.

B. Except as otherwise provided in this Paragraph, the CONTRACTOR shall receive no additional compensation for overtime work, i.e., work in excess of 8 hours in any one calendar day or 40 hours in any one calendar week, even though such overtime work may be required under emergency conditions and may be ordered by the ENGINEER in writing. Additional compensation will be paid the CONTRACTOR for overtime work only in the

event extra work is ordered by the ENGINEER and the Change Order specifically authorizes the use of overtime work and then only to such extent as overtime wages are regularly being paid by the CONTRACTOR for overtime work of a similar nature in the same locality.

C. All costs of inspection and testing performed during overtime work by the CONTRACTOR which is allowed solely for the convenience of the CONTRACTOR shall be borne by the CONTRACTOR. The OWNER shall have the authority to deduct the cost of all such inspection and testing from any partial payments otherwise due to the CONTRACTOR.

D. Unless otherwise specified in the Contract Documents, the CONTRACTOR shall furnish and assume full responsibility for all materials, equipment, labor, transportation, construction equipment and machinery, tools, appliances, fuel, power, light, heat, telephone, water, sanitary facilities, and all other facilities and incidentals necessary for the furnishing, performance, testing, start-up, and completion of the WORK.

E. All materials and equipment to be incorporated into the WORK shall be of good quality and new, except as otherwise provided in the Contract Documents. All warranties and guarantees specifically called for by the Specifications shall expressly run to the benefit of the OWNER. If required by the ENGINEER, the CONTRACTOR shall furnish satisfactory evidence (including reports of required tests) as to the kind and quality of materials and equipment. All materials and equipment shall be applied, installed, connected, erected, used, cleaned, and conditioned in accordance with the instructions of the applicable Supplier except as otherwise provided in the Contract Documents; but no provisions of any such instructions will be effective to assign to the ENGINEER, or any of the ENGINEER consultants, agents, or employees, any duty or authority to supervise or direct the furnishing or performance of the WORK or any duty or authority to undertake responsibility contrary to the provisions of Paragraphs 9.9C and 9.9D.

F. The CONTRACTOR shall at all times employ sufficient labor and equipment for prosecuting the several classes of WORK to full completion in the manner and time set forth in and required by these specifications. All workers shall have sufficient skill and experience to perform property the WORK assigned to them. Workers engaged in special WORK, or skilled WORK, shall have sufficient experience in such WORK and in the operation of the equipment required to perform all WORK, properly and satisfactorily.

G. Any person employed by the CONTRACTOR or by any Subcontractor who, in the opinion of the ENGINEER, does not perform the WORK in a proper and skillful manner, or is intemperate or disorderly shall, at the written request of the ENGINEER, be removed forthwith by the CONTRACTOR or Subcontractor employing such person, and shall not be employed again in any portion of the WORK without the approval of the ENGINEER. Should the CONTRACTOR fail to remove such person or persons as required above, or fail to furnish suitable and sufficient personnel for the proper prosecution of the WORK, the ENGINEER may suspend the WORK by written notice until such orders are complied with.

6.3 ADJUSTING PROGRESS SCHEDULE. The CONTRACTOR shall submit monthly updates of the progress schedule to the ENGINEER for acceptance in accordance with the provisions in Section 01300 - CONTRACTOR Submittals in the General Requirements.

6.4 SUBSTITUTES OR "OR-EQUAL" ITEMS. The CONTRACTOR shall submit proposed substitutes or "or-equal" items in accordance with the provisions in Section 01300 - CONTRACTOR Submittals in the General Requirements.

6.5 CONCERNING SUBCONTRACTORS, SUPPLIERS, AND OTHERS.

A. The CONTRACTOR shall be responsible to the OWNER and the ENGINEER for the acts and omissions of its Subcontractors and their employees to the same extent as CONTRACTOR is responsible for the acts and omissions of its own employees. Nothing contained in this Paragraph shall create any contractual relationship between any Subcontractor and the OWNER or the ENGINEER nor relieve the CONTRACTOR of any liability or obligation under the prime contract.

B. The CONTRACTOR shall perform not less than 40% of the WORK with its own forces (i.e., without subcontracting). The 40% requirement shall be understood to mean that the CONTRACTOR shall perform, with its own organization, WORK amounting to at least 40% of the awarded contract amount. The 40% requirement will be calculated based upon the total of the subcontract amounts submitted for contract award, and any other information requested by the OWNER from the apparent low bidder.

6.6 PERMITS

A. Unless otherwise provided in the Supplementary General Conditions, the CONTRACTOR shall obtain and pay for all construction permits and licenses from the agencies having jurisdiction, including the furnishing of insurance and bonds if required by such agencies. The enforcement of such requirements under this contract shall not be made the basis for claims for additional compensation. The OWNER shall assist the CONTRACTOR, when necessary, in obtaining such permits and licenses. The CONTRACTOR shall pay all governmental charges and inspection fees necessary for the prosecution of the WORK, which are applicable at the time of opening of Bids. The CONTRACTOR shall pay all charges of utility owners for connections to the WORK.

B. These Contract Documents may require that the WORK be performed within the conditions and/or requirements of local, state and/or federal permits. These permits may be bound within the Contract Documents, included within the Contract Documents by reference, or included as part of the WORK, as designated in this Section. The CONTRACTOR is responsible for completing the WORK required for compliance with all permit requirements; this WORK is incidental to other items in the Contract Documents. Any reference to the PERMITTEE in the permits shall mean the CONTRACTOR. If any permits were acquired by the OWNER, this action was done to expedite the start of construction. If the CONTRACTOR does not complete the WORK within the specified permit window, the CONTRACTOR shall be responsible for the permit extension, and for completing any additional requirements placed upon the permit.

C. The OWNER shall apply for, and obtain, the necessary building permit for this Project, however, the CONTRACTOR is responsible for scheduling and coordinating all necessary inspections. The CBJ Inspection number is 586-1703. All other provisions of this Section remain in effect.

6.7 PATENT FEES AND ROYALTIES. The CONTRACTOR shall pay all license fees and royalties and assume all costs incident to the use in the performance of the WORK or the incorporation in the WORK of any invention, design, process, product, software or device which is the subject of patent rights or copyrights held by others. If a particular invention, design, process, product, or device is specified in the Contract Documents for use in the performance of the WORK and if to the actual knowledge of the OWNER or the ENGINEER its use is subject to patent rights or copyrights calling for the payment of any license fee or royalty to others, the existence of such rights shall be disclosed by the OWNER in the Contract Documents. The CONTRACTOR shall indemnify, defend and hold harmless the OWNER and the ENGINEER and anyone directly or indirectly employed by either of them from and against all claims, damages, losses, and expenses (including attorneys' fees and court costs) arising out of any infringement of patent rights or copyrights incident to the use in the performance of the WORK or resulting from the incorporation in the WORK of any invention, design, process, product, or device not specified in the Contract Documents, and shall defend all such claims in connection with any alleged infringement of such rights.

6.8 LAWS AND REGULATIONS. The CONTRACTOR shall observe and comply with all federal, state, and local laws, ordinances, codes, orders, and regulations which in any manner affect those engaged or employed on the WORK, the materials used in the WORK, or the conduct of the WORK. If any discrepancy or inconsistency should be discovered in this contract in relation to any such law, ordinance, code, order, or regulation, the CONTRACTOR shall report the same in writing to the ENGINEER. The CONTRACTOR shall indemnify, defend, and hold harmless the OWNER, the ENGINEER, and their officers, agents, and employees against all claims or liability arising from violation of any such law, ordinance, code, order, or regulation, whether by CONTRACTOR or by its employees, Subcontractors, or third parties. Any particular law or regulation specified or referred to elsewhere in the Contract Documents shall not in any way limit the obligation of the CONTRACTOR to comply with all other provisions of federal, state, and local laws and regulations.
The OWNER may, per AS 36.30, audit the CONTRACTOR's or Subcontractor(s) records that are related to the cost or pricing data for this contract, all related Change Orders, and/or contract modifications.

6.9 TAXES. The CONTRACTOR shall pay all sales, consumer, use, and other similar taxes required to be paid by the CONTRACTOR in accordance with the Laws and Regulations of the place of the Project which are applicable during the performance of the WORK.

6.10 USE OF PREMISES. The CONTRACTOR shall confine construction equipment, the storage of materials and equipment, and the operations of workers to (1) the Project site, (2) the land and areas identified in and permitted by the Contract Documents, and (3) the other land and areas permitted by Laws and Regulations, rights-of-way, permits, leases and easements. The CONTRACTOR shall assume full responsibility for any damage to any such land or area, or to the owner or occupant thereof or of any land or areas contiguous thereto, resulting from the performance of the WORK. Should any claim be made against the OWNER or the ENGINEER by any such owner or occupant because of the performance of the WORK, the CONTRACTOR shall promptly attempt to settle with such other party by agreement or otherwise resolve the claim through litigation. The CONTRACTOR shall, to the fullest extent permitted by Laws and Regulations, indemnify, defend, and hold the OWNER and the ENGINEER harmless from and against all claims, damages, losses, and expenses (including, but not limited to, fees of engineers attorneys, and other professionals and court costs) arising directly, indirectly, or consequentially out of any action, legal or equitable, brought by any such owner or occupant against the OWNER, the ENGINEER, their Consultants, Sub-consultants, and the officers,

directors, employees and agents of each and any of them to the extent caused by or based upon the CONTRACTOR's performance of the WORK.

6.11 SAFETY AND PROTECTION

A. The CONTRACTOR shall be responsible for initiating, maintaining, and supervising all safety precautions and programs in connection with the WORK. The CONTRACTOR shall take all necessary precautions for the safety of, and shall provide the necessary protection to prevent damage, injury or loss to:

1. all employees on the WORK and other persons and organizations who may be affected thereby;
2. all the WORK and materials and equipment to be incorporated therein, whether in storage on or off the site; and
3. other property at the site or adjacent thereto, including trees, shrubs, lawns, walks, pavements, roadways, structures, and utilities not designated for removal, relocation, or replacement in the course of construction.

B. The CONTRACTOR shall comply with all applicable Laws and Regulations whether referred to herein or not) of any public body having jurisdiction for the safety of persons or property or to protect them from damage, injury, or loss and shall erect and maintain all necessary safeguards for such safety and protection. The CONTRACTOR shall notify owners of adjacent property and utilities when prosecution of the WORK may affect them, and shall cooperate with them in the protection, removal, relocation, and replacement of their property.

C. The CONTRACTOR shall designate a qualified and experienced safety representative at the site whose duties and responsibilities shall be the prevention of accidents and the maintaining and supervising of safety precautions and program.

D. Materials that contain hazardous substances or mixtures may be required on the WORK. A Material Safety Data Sheet shall be requested by the CONTRACTOR from the manufacturer of any hazardous product used.

E. Material usage shall be accomplished with strict adherence to all safety requirements and all manufacturer's warnings and application instructions listed on the Material Safety Data Sheet and on the product container label.

F. The CONTRACTOR shall be responsible for coordinating communications on any exchange of Material Safety Data Sheets or other hazardous material information that is required to be made available to, or exchanged between, or among, employers at the site in accordance with Laws or Regulations.

G. The CONTRACTOR shall notify the ENGINEER if it considers a specified product or its intended usage to be unsafe. This notification must be given to the ENGINEER prior to the product being ordered, or if provided by some other party, prior to the product being incorporated in the WORK.

6.12 SHOP DRAWINGS AND SAMPLES

A. After checking and verifying all field measurements and after complying with applicable procedures specified in the General Requirements, the CONTRACTOR shall submit to the ENGINEER for review, all Shop Drawings in accordance with Section 01300 - CONTRACTOR Submittals in the General Requirements.

B. The CONTRACTOR shall also submit to the ENGINEER for review all samples in accordance with Section 01300 - CONTRACTOR Submittals in the General Requirements.

C. Before submittal of each shop drawing or sample, the CONTRACTOR shall have determined and verified all quantities, dimensions, specified performance criteria, installation requirements, materials, catalog numbers, and similar data with respect thereto and reviewed or coordinated each Shop Drawing or sample with other Shop Drawings and samples and with the requirements of the WORK and the Contract Documents.

6.13 CONTINUING THE WORK. The CONTRACTOR shall carry on the WORK and adhere to the progress schedule during all disputes or disagreements with the OWNER. No work shall be delayed or postponed pending resolution of any disputes or disagreements, except as the CONTRACTOR and the OWNER may otherwise agree in writing.

6.14 INDEMNIFICATION

A. To the fullest extent permitted by Laws and Regulations, the CONTRACTOR shall indemnify, defend, and hold harmless the OWNER, the ENGINEER, their Consultants, Sub-consultants and the officers, directors, employees, and agents of each and any of them, against and from all claims and liability arising under, by reason of or incidentally to the contract or any performance of the WORK, but not from the sole negligence or willful misconduct of the OWNER, and the ENGINEER. Such indemnification by the CONTRACTOR shall include but not be limited to the following:

1. Liability or claims resulting directly or indirectly from the negligence or carelessness of the CONTRACTOR, its employees, or agents in the performance of the WORK, or in guarding or maintaining the same, or from any improper materials, implements, or appliances used in its construction, or by or on account of any act or omission of the CONTRACTOR, its employees, agents, or third parties;
2. Liability or claims arising directly or indirectly from bodily injury, occupational sickness or disease, or death of the CONTRACTOR’s or Subcontractor’s own employees engaged in the WORK resulting in actions brought by or on behalf of such employees against the OWNER, and the ENGINEER;
3. Liability or claims arising directly or indirectly from or based on the violation of any law, ordinance, regulation, order, or decree, whether by the CONTRACTOR, its employees, or agents;
4. Liability or claims arising directly or indirectly from the use or manufacture by the CONTRACTOR, its employees, or agents in the performance of this contract of any copyrighted or non-copyrighted composition, secret process, patented or non-patented invention, computer software, article, or appliance, unless otherwise specifically stipulated in this contract.

5. Liability or claims arising directly or indirectly from the breach of any warranties, whether express or implied, made to the OWNER or any other parties by the CONTRACTOR, its employees, or agents;
6. Liabilities or claims arising directly or indirectly from the willful or criminal misconduct of the CONTRACTOR, its employees, or agents; and,
7. Liabilities or claims arising directly or indirectly from any breach of the obligations assumed herein by the CONTRACTOR.

B. The CONTRACTOR shall reimburse the ENGINEER and the OWNER for all costs and expenses, (including but not limited to fees and charges of engineers, attorneys, and other professionals and court costs including all costs of appeals) incurred by said OWNER, and the ENGINEER in enforcing the provisions of this Paragraph 6.14.

C. The indemnification obligation under this Paragraph 6.14 shall not be limited in any way by any limitation of the amount or type of damages, compensation, or benefits payable by or for the CONTRACTOR or any such Subcontractor or other person or organization under workers' compensation acts, disability benefit acts, or other employee benefit acts.

6.15 CONTRACTOR'S DAILY REPORTS. The CONTRACTOR shall complete a daily report indicating total manpower for each construction trade, major equipment on site, each Subcontractor's manpower, weather conditions, etc., involved in the performance of the WORK. The daily report shall be completed on forms provided by the ENGINEER and shall be submitted to the ENGINEER at the conclusion of each workday. The report should comment on the daily progress and status of the WORK within each major component of the WORK. These components will be decided by the ENGINEER. CONTRACTOR shall record the name, affiliation, time of arrival and departure, and reason for visit for all visitors to the location of the WORK.

6.16 ASSIGNMENT OF CONTRACT. The CONTRACTOR shall not assign, sublet, sell, transfer, or otherwise dispose of the contract or any portion thereof, or its right, title, or interest therein, or obligations thereunder, without the written consent of the OWNER except as imposed by law. If the CONTRACTOR violates this provision, the contract may be terminated at the option of the OWNER. In such event, the OWNER shall be relieved of all liability and obligations to the CONTRACTOR and to its assignee or transferee, growing out of such termination.

6.17 CONTRACTOR'S RESPONSIBILITY FOR UTILITY PROPERTY AND SERVICES. It is understood that any turn-on or turn-off, line locates and any other work or assistance necessary by the CBJ Water Utilities Division, will be at the CONTRACTOR's expense unless otherwise stated in the bid documents. All cost must be agreed to prior to any related actions, and will be considered incidental to the project cost. Billing to the CONTRACTOR will be direct from the CBJ Water Utilities Division.

6.18 OPERATING WATER SYSTEM VALVES

A. The CONTRACTOR shall submit a written request, to the ENGINEER, for approval to operate any valve on any in-service section of the CBJ water system. The request must be submitted at least 24-hours prior to operating any valves. The CBJ Water Utilities Division reserves the right to approve or deny the request. The request shall specifically identify each valve to be operated, the time of operation, and the operation to be performed. The

CONTRACTOR shall obtain the written approval of the ENGINEER for any scheduled operation before operating any valve.

B. The CONTRACTOR shall be responsible for all damages, both direct and consequential, to the City or any other party, caused by unauthorized operation of any valve of the CBJ water system.

6.19 CONTRACTOR'S WORK SCHEDULE LIMITATIONS. Construction of Buildings and Projects. It is unlawful to operate any pile driver, power shovel, pneumatic hammer, derrick, power hoist, or similar heavy construction equipment before 7:00 a.m. or after 10:00 p.m., Monday through Friday, or before 9:00 a.m. or after 10:00 p.m., Saturday and Sunday, unless a permit shall first be obtained from the City and Borough Building Official. Such permit shall be issued by the Building Official only upon a determination that such operation during hours not otherwise permitted hereunder is necessary and will not result in unreasonable disturbance to surrounding residents.

ARTICLE 7 OTHER WORK

7.1 RELATED WORK AT SITE

A. The OWNER may perform other work related to the Project at the site by the OWNER's own forces, have other work performed by utility owners, or let other direct contracts therefor which may contain General Conditions similar to these. If the fact that such other work is to be performed was not noted in the Contract Documents, written notice thereof will be given to the CONTRACTOR prior to starting any such other work.

B. The CONTRACTOR shall afford each other contractor who is a party to such a direct contract and each utility owner (or the OWNER, if the OWNER is performing the additional work with the OWNER's employees) proper and safe access to the site and a reasonable opportunity for the introduction and storage of materials and equipment and the execution of such work, and shall properly connect and coordinate the WORK with theirs. The CONTRACTOR shall do all cutting, fitting, and patching of the WORK that may be required to make its several parts come together properly and integrate with such other work. The CONTRACTOR shall not endanger any work of others by cutting, excavating, or otherwise altering their work and will only cut or alter their work with the written consent of the ENGINEER and the others whose work will be affected.

C. If the proper execution or results of any part of the CONTRACTOR's work depends upon the work of any such other contractor or utility owner (or OWNER), the CONTRACTOR shall inspect and report to the ENGINEER in writing any delays, defects, or deficiencies in such other work that render it unavailable or unsuitable for such proper execution and results. The CONTRACTOR's failure to report such delays, defects, or deficiencies will constitute an acceptance of the other work as fit and proper for integration with the CONTRACTOR's work except for latent or nonapparent defects and deficiencies in the other work.

7.2 COORDINATION. If the OWNER contracts with others for the performance of other work on the Project at the site, the person or organization who will have authority and responsibility for coordination of the activities among the various prime contractors will be identified in the Supplementary General Conditions, and the specific matters to be covered by such authority and

responsibility will be itemized and the extent of such authority and responsibilities will be provided in the Supplementary General Conditions.

ARTICLE 8 OWNER'S RESPONSIBILITIES

8.1 COMMUNICATIONS

A. The OWNER shall issue all its communications to the CONTRACTOR through the ENGINEER.

B. The CONTRACTOR shall issue all its communications to the OWNER through the ENGINEER.

8.2 PAYMENTS. The OWNER shall make payments to the CONTRACTOR as provided in Paragraphs 14.5, 14.8, 14.9 and 14.10.

8.3 LANDS, EASEMENTS, AND SURVEYS. The OWNER's duties in respect of providing lands and easements and providing surveys to establish reference points are set forth in Paragraphs 4.1 and 4.5.

8.4 CHANGE ORDERS. The OWNER shall execute Change Orders as indicated in Paragraph 10.1F.

8.5 INSPECTIONS AND TESTS. The OWNER's responsibility in respect of inspections, tests, and approvals is set forth in Paragraph 13.3.

8.6 SUSPENSION OF WORK. In connection with the OWNER's right to stop WORK or suspend WORK, see Paragraphs 13.4 and 15.1.

8.7 TERMINATION OF AGREEMENT. Paragraphs 15.2 and 15.3 deal with the OWNER's right to terminate services of the CONTRACTOR.

ARTICLE 9 ENGINEER'S STATUS DURING CONSTRUCTION

9.1 OWNER'S REPRESENTATIVE. The ENGINEER will be the OWNER's representative during the construction period. The duties and responsibilities and the limitations of authority of the ENGINEER as the OWNER's representative during construction are set forth in the Contract Documents.

9.2 VISITS TO SITE. The ENGINEER will make visits to the site during construction to observe the progress and quality of the WORK and to determine, in general, if the WORK is proceeding in accordance with the Contract Documents. Exhaustive or continuous on-site inspections to check the quality or quantity of the WORK will not be required of the ENGINEER. The ENGINEER will not, during such visits, or as a result of such observations of the CONTRACTOR's WORK in progress, supervise, direct, or have control over the CONTRACTOR's WORK.

9.3 PROJECT REPRESENTATION. The ENGINEER may furnish an Inspector to assist in observing the performance of the WORK. The duties, responsibilities, and limitations of authority are as follows:

A. Duties, Responsibilities and Limitations of Authority of Inspector

General. The Inspector, who is the ENGINEER's Agent, will act as directed by and under the supervision of the ENGINEER and will confer with the ENGINEER regarding its actions. The Inspector's dealings in matters pertaining to the on-site WORK shall, in general, be only with the ENGINEER and the CONTRACTOR, and dealings with Subcontractors shall only be through or with the full knowledge of the CONTRACTOR. Written communication with the OWNER will be only through or as directed by the ENGINEER.

Duties and Responsibilities. The Inspector may:

1. Review the progress schedule, list of Shop Drawing submittals and schedule of values prepared by the CONTRACTOR and consult with the ENGINEER concerning their acceptability.
2. Attend pre-construction conferences. Arrange a schedule of progress meetings and other job conferences as required in consultation with the ENGINEER and notify those expected to attend in advance. Attend meetings and maintain and circulate copies of minutes thereof.
3. Serve as the ENGINEER's liaison with the CONTRACTOR, working principally through the CONTRACTOR's superintendent and assist said superintendent in understanding the intent of the Contract Documents. Assist the ENGINEER in serving as the OWNER's liaison with the CONTRACTOR when the CONTRACTOR's operations affect the OWNER's on-site operations.
4. As requested by the ENGINEER, assist in obtaining from the OWNER additional details or information, when required at the site for proper execution of the WORK.
5. Receive and record date of receipt of Shop Drawings and samples, receive samples which are furnished at the site by the CONTRACTOR and notify the ENGINEER of their availability for examination.
6. Conduct on-site observations of the WORK in progress to assist the ENGINEER in determining if the WORK is proceeding in accordance with the Contract Documents.
7. Report to the ENGINEER whenever the Inspector believes that any WORK is unsatisfactory, faulty, or defective or does not conform to the Contract Documents, or does not meet the requirements of any inspection, tests or approval required to be made or has been damaged prior to final payment; and advise the ENGINEER when the Inspector believes WORK should be corrected or rejected or should be uncovered for observation, or requires special testing, inspection, or approval.
8. Verify that the tests, equipment, and systems startups and operating and maintenance instruction are conducted as required by the Contract Documents and in presence of the required personnel, and that the CONTRACTOR maintains adequate records thereof; observe, record and report to the ENGINEER appropriate details relative to the test procedures and start-ups.
9. Accompany visiting inspectors representing public or other agencies having jurisdiction over the WORK, record the outcome of these inspections, and report to the ENGINEER.
10. Transmit to the CONTRACTOR the ENGINEER's clarifications and interpretations of the Contract Documents.
11. Consider and evaluate the CONTRACTOR's suggestions for modifications in the Contract Documents and report them with recommendations to the ENGINEER.
12. Maintain at the job site orderly files for correspondence, reports of job conferences, Shop Drawings and sample submittals, reproductions of original Contract Documents including all addenda, Change Orders, field orders, additional Drawings issued

subsequent to the execution of the contract, the ENGINEER's clarifications and interpretations of the Contract Documents, progress reports, and other related documents.

13. Keep a diary or log book, recording hours on the job site, weather conditions, data relative to questions of extras or deductions, list all project visitors, daily activities, decisions, observations in general, and specific observations in more detail as in the case of performing and observing test procedures. Send copies to the ENGINEER.
14. Record names, addresses, and telephone numbers of the CONTRACTOR, Subcontractors, and major suppliers of materials and equipment.
15. Furnish the ENGINEER with periodic reports as required of progress of the WORK and the CONTRACTOR's compliance with the accepted progress schedule and schedule of CONTRACTOR submittals.
16. Consult with the ENGINEER in advance of scheduled major tests, inspections, or start of important phases of the WORK.
17. Report immediately to the ENGINEER upon the occurrence of any accident.
18. Review applications for payment with the CONTRACTOR for compliance with the established procedure for their submittal and forward them with recommendations to the ENGINEER, noting particularly their relation to the schedule of values, WORK completed, and materials and equipment delivered at the site but not incorporated in the WORK.
19. During the course of the WORK, verify that certificates, maintenance and operation manuals, and other data required to be assembled and furnished by the CONTRACTOR are applicable to the items actually installed; and deliver this material to the ENGINEER for its review and forwarding to the OWNER prior to final acceptance of the WORK.
20. Before the ENGINEER prepares a Certificate of Substantial Completion/Notice of Completion, as applicable, review the CONTRACTOR's punch list items requiring completion or correction and add any items that CONTRACTOR has omitted.
21. Conduct final inspection in the company of the ENGINEER, the OWNER, and the CONTRACTOR, and prepare a final punch list of items to be completed or corrected.
22. Verify that all items on the punch list have been completed or corrected and make recommendations to the ENGINEER concerning acceptance.

Limitations of Authority. Except upon written instruction of the ENGINEER, the Inspector:

1. Shall not authorize any deviation from the Contract Documents or approve any substitute material or equipment.
2. Shall not exceed limitations on the ENGINEER's authority as set forth in the Contract Documents.
3. Shall not undertake any of the responsibilities of the CONTRACTOR, Subcontractors or CONTRACTOR's superintendent, or expedite the WORK.
4. Shall not advise on or issue directions relative to any aspect of the means, methods, techniques, sequences, or procedures of construction unless such is specifically called for in the Contract Documents.
5. Shall not advise on or issue directions as to safety precautions and programs in connection with the WORK.

9.4 CLARIFICATIONS AND INTERPRETATIONS. The ENGINEER will issue with reasonable promptness such written clarifications or interpretations of the requirements of the Contract

Documents (in the form of Drawings or otherwise) as the ENGINEER may determine necessary, which shall be consistent with, or reasonably inferred from, the overall intent of the Contract Documents.

9.5 AUTHORIZED VARIATIONS IN WORK. The ENGINEER may authorize variations in the WORK from the requirements of the Contract Documents. These may be accomplished by a Field Order and will require the CONTRACTOR to perform the WORK involved in a manner that minimizes the impact to the WORK and the contract completion date. If the CONTRACTOR believes that a Field Order justifies an increase in the Contract Price or an extension of the Contract Time, the CONTRACTOR may make a claim therefor as provided in Article 11 or 12.

9.6 REJECTING DEFECTIVE WORK. The ENGINEER will have authority to reject WORK which the ENGINEER believes to be defective and will also have authority to require special inspection or testing of the WORK as provided in Paragraph 13.3G, whether or not the WORK is fabricated, installed, or completed.

9.7 CONTRACTOR SUBMITTALS, CHANGE ORDERS, AND PAYMENTS

A. In accordance with the procedures set forth in the General Requirements, the ENGINEER will review all CONTRACTOR submittals, including Shop Drawings, samples, substitutes, or "or equal" items, etc., in order to determine if the items covered by the submittals will, after installation or incorporation in the WORK, conform to the requirements of the Contract Documents and be compatible with the design concept of the completed project as a functioning whole as indicated by the Contract Documents. The ENGINEER's review will not extend to means, methods, techniques, sequences or procedures of construction or to safety precautions or programs incident thereto.

B. In connection with the ENGINEER's responsibilities as to Change Orders, see Articles 10, 11, and 12.

C. In connection with the ENGINEER's responsibilities in respect of Applications for Payment, see Article 14.

9.8 DECISIONS ON DISPUTES

A. The ENGINEER will be the initial interpreter of the requirements of the Contract Documents and judge of the acceptability of the WORK thereunder. Claims, disputes, and other matters relating to the acceptability of the WORK; the interpretation of the requirements of the Contract Documents pertaining to the performance of the WORK; and those claims under Articles 11 and 12 in respect to changes in the Contract Price or Contract Time will be referred initially to the ENGINEER in writing with a request for formal decision in accordance with this paragraph, which the ENGINEER will render in writing within 30 days of receipt of the request. Written notice of each such claim, dispute, and other matter will be delivered by the CONTRACTOR to the ENGINEER promptly (but in no event later than 30 days) after the occurrence of the event giving rise thereto. Written supporting data will be submitted to the ENGINEER within 60 days after such occurrence unless the ENGINEER allows an additional period of time to ascertain more accurate data in support of the claim.

B. The rendering of a decision by the ENGINEER with respect to any such claim, dispute, or other matter (except any which have been waived by the making or acceptance of final payment as provided in Paragraph 14.12) will be a condition precedent to any exercise by the OWNER or the CONTRACTOR of such rights or remedies as either may otherwise have under the Contract Documents or by Law or Regulations in respect of any such claim, dispute, or other matter.

9.9 LIMITATION ON ENGINEER'S RESPONSIBILITIES

A. Neither the ENGINEER's authority to act under this Article or other provisions of the Contract Documents nor any decision made by the ENGINEER in good faith either to exercise or not exercise such authority shall give rise to any duty or responsibility of the ENGINEER to the CONTRACTOR, any Subcontractor, any Supplier, any surety for any of them, or any other person or organization performing any of the WORK.

B. Whenever in the Contract Documents the terms "as ordered," "as directed," "as required," "as allowed," "as reviewed," "as approved," or terms of like effect or import are used, or the adjectives "reasonable," "suitable," "acceptable," "proper," or "satisfactory" or adjectives of like effect or import are used to describe a requirement, direction, review, or judgment of the ENGINEER as to the WORK, it is intended that such requirement, direction, review, or judgment will be solely to evaluate the WORK for compliance with the requirements of the Contract Documents, and conformance with the design concept of the completed Project as a functioning whole as indicated by the Contract Documents, unless there is a specific statement indicating otherwise. The use of any such term or adjective shall not be effective to assign to the ENGINEER any duty or authority to supervise or direct the performance of the WORK or any duty or authority to undertake responsibility contrary to the provisions of Paragraph 9.9C or 9.9D.

C. The ENGINEER will not supervise, direct, control, or have authority over or be responsible for the CONTRACTOR's means, methods, techniques, sequences, or procedures of construction, or the safety precautions and programs incident thereto, or for any failure of the CONTRACTOR to comply with Laws and Regulations, applicable to the performance of the WORK. The ENGINEER will not be responsible for the CONTRACTOR's failure to perform the WORK in accordance with the Contract Documents.

D. The ENGINEER will not be responsible for the acts or omissions of the CONTRACTOR nor of any Subcontractor, supplier, or any other person or organization performing any of the WORK.

ARTICLE 10 CHANGES IN THE WORK

10.1 GENERAL

A. Without invalidating the Agreement and without notice to any surety, the OWNER may at any time or from time to time, order additions, deletions, or revisions in the WORK; these will be authorized by a written Field Order and/or a Change Order issued by the ENGINEER.

B. If the CONTRACTOR believes that it is entitled to an increase or decrease in the Contract Price, or an extension or shortening in the Contract Time as the result of a Field Order, a claim may be made as provided in Articles 11 and 12.

C. If the OWNER and CONTRACTOR agree on the value of any work, or the amount of Contract Time that should be allowed as a result of a Field Order, upon receiving written notice from the ENGINEER, the CONTRACTOR shall proceed so as to minimize the impact on and delays to the work pending the issuance of a Change Order.

D. If the OWNER and the CONTRACTOR are unable to agree as to the extent, if any, of an increase or decrease in the Contract Price or an extension or shortening of the Contract Time that should be allowed as a result of a Field Order, the ENGINEER can direct the CONTRACTOR to proceed on the basis of Time and Materials so as to minimize the impact on and delays to WORK, and a claim may be made therefor as provided in Articles 11 and 12.

E. The CONTRACTOR shall not be entitled to an increase in the Contract Price nor an extension of the Contract Time with respect to any work performed that is not required by the Contract Documents as amended, modified, supplemented by Change Order, except in the case of an emergency and except in the case of uncovering work as provided in Paragraph 13.3G.

F. The OWNER and the CONTRACTOR shall execute appropriate Change Orders covering:

1. changes in the WORK which are ordered by the OWNER pursuant to Paragraph 10.1A;
2. changes required because of acceptance of Defective WORK under Paragraph 13.7;
3. changes in the Contract Price or Contract Time which are agreed to by the parties; or
4. changes in the Contract Price or Contract Times which embody the substance of any written decision rendered by the ENGINEER pursuant to Paragraph 9.8.

G. If notice of any change is required by the provisions of any Bond to be given to a surety, the giving of any such notice will be the CONTRACTOR's responsibility, and the amount of each applicable Bond shall be adjusted accordingly.

10.2 ALLOWABLE QUANTITY VARIATIONS

A. In the event of an increase or decrease in Bid item quantity of a unit price contract, the total amount of WORK actually done or materials or equipment furnished shall be paid for according to the unit price established for such WORK under the Contract Documents, wherever such unit price has been established; provided, that an adjustment in the Contract Price may be made for changes which result in an increase or decrease in excess of 25% of

the estimated quantity of any major item of the WORK. Major Item is defined as any bid item amount that is ten percent (10%) or more of the total contract amount.

B. In the event a part of the WORK is to be entirely eliminated and no lump sum or unit price is named in the Contract Documents to cover such eliminated work, the price of the eliminated work shall be agreed upon in writing by the OWNER and the CONTRACTOR. If the OWNER and the CONTRACTOR fail to agree upon the price of the eliminated work, said price shall be determined in accordance with the provisions of Article 11.

ARTICLE 11 CHANGE OF CONTRACT PRICE

11.1 GENERAL

A. The Contract Price constitutes the total compensation payable to the CONTRACTOR for performing the WORK. All duties, responsibilities, and obligations assigned to or undertaken by the CONTRACTOR to complete the WORK shall be at its expense without change in the Contract Price.

B. The Contract Price may only be changed by a Change Order. Any claim for an increase in the Contract Price shall be based on written notice delivered by the CONTRACTOR to the ENGINEER promptly (but in no event later than 7 days) after the start of the occurrence or the event giving rise to the claim and stating the general nature of the claim. Notice of the amount of the claim with supporting data shall be delivered within 14 days after such occurrence (unless the ENGINEER allows an additional period of time to ascertain more accurate data in support of the claim) and shall be accompanied by the CONTRACTOR's written statement that the amount claimed covers all known amounts (direct, indirect, and consequential) to which the CONTRACTOR is entitled as a result of said occurrence or event. All claims for adjustment in the Contract Price shall be determined by the ENGINEER in accordance with Paragraph 9.8A if the OWNER and the CONTRACTOR cannot otherwise agree on the amount involved. No claim for an adjustment in the Contract Price will be valid if not submitted in accordance with this Paragraph 11.1B.

C. The value of any WORK covered by a Change Order or of any claim for an increase or decrease in the Contract Price shall be determined in one of the following ways:

1. Where the WORK involved is covered by unit prices contained in the Contract Documents, by application of unit prices to the quantities of the items involved.
2. By mutual acceptance of a lump sum, which may include an allowance for overhead and profit not necessarily in accordance with Paragraph 11.4.
3. On the basis of the cost of WORK (determined as provided in Paragraphs 11.3) plus a CONTRACTOR's fee for overhead and profit (determined as provided in Paragraph 11.4).

11.2 COSTS RELATING TO WEATHER. The CONTRACTOR shall have no claims against the OWNER for damages for any injury to WORK, materials, or equipment, resulting from the action of the elements. If, however, in the opinion of the ENGINEER, the CONTRACTOR has made all reasonable efforts to protect the materials, equipment and work, the CONTRACTOR may be granted a reasonable extension of Contract Time to make proper repairs, renewals, and replacements of the work, materials, or equipment.

11.3 COST OF WORK (BASED ON TIME AND MATERIALS)

A. General. The term "cost of work" means the sum of all costs necessarily incurred and paid by the CONTRACTOR for labor, materials, and equipment in the proper performance of extra work. Except as otherwise may be agreed to in writing by the OWNER, such costs shall be in amounts no higher than those prevailing in the locality of the Project; shall include only the following items, and shall not include any of the costs itemized in Paragraph 11.5 EXCLUDED COSTS.

B. Labor. The costs of labor will be the actual cost for wages prevailing for each craft or type of workers performing the extra work at the time the extra work is done, plus employer payments of payroll taxes, worker's compensation insurance, liability insurance, health and welfare, pension, vacation, apprenticeship funds, and other direct costs resulting from Federal, State or local laws, as well as assessments or benefits required by lawful collective bargaining agreements. Labor costs for equipment operators and helpers shall be paid only when such costs are not included in the invoice for equipment rental. The labor costs for forepersons shall be proportioned to all of their assigned work and only that applicable to extra work shall be paid. Non-direct labor costs including superintendence shall be considered part of the mark-up set out in paragraph 11.4.

C. Materials. The cost of materials reported shall be at invoice or lowest current price at which materials are locally available and delivered to the job in the quantities involved, plus the cost of freight, delivery and storage, subject to the following:

1. Trade discounts available to the purchaser shall be credited to the OWNER notwithstanding the fact that such discounts may not have been taken by the CONTRACTOR.
2. For materials secured by other than a direct purchase and direct billing to the purchaser, the cost shall be deemed to be the price paid to the actual supplier as determined by the ENGINEER. Mark-up except for actual costs incurred in the handling of such materials will not be allowed.
3. Payment for materials from sources owned wholly or in part by the purchaser shall not exceed the price paid by the purchaser for similar materials from said sources on extra work items or the current wholesale price for such materials delivered to the work site, whichever price is lower.
4. If in the opinion of the ENGINEER the cost of material is excessive, or the CONTRACTOR does not furnish satisfactory evidence of the cost of such material, then the cost shall be deemed to be the lowest current wholesale price for the quantity concerned delivered to the work site less trade discount. The OWNER reserves the right to furnish materials for the extra work and no claim shall be allowed by the CONTRACTOR for costs and profit on such materials.

D. Equipment. The CONTRACTOR will be paid for the use of equipment at the rental rate listed for such equipment specified in the Supplementary General Conditions. Such rental rate will be used to compute payments for equipment whether the equipment is under the CONTRACTOR's control through direct ownership, leasing, renting, or another method of acquisition. The rental rate to be applied for use of each item of equipment shall be the rate resulting in the least total cost to the OWNER for the total period of use. If it is deemed

necessary by the CONTRACTOR to use equipment not listed in the publication specified in the Supplementary General Conditions, an equitable rental rate for the equipment will be established by the ENGINEER. The CONTRACTOR may furnish cost data which might assist the ENGINEER in the establishment of the rental rate.

1. All equipment shall, in the opinion of the ENGINEER, be in good working condition and suitable for the purpose for which the equipment is to be used.
2. Before construction equipment is used on the extra work, the CONTRACTOR shall plainly stencil or stamp an identifying number thereon at a conspicuous location, and shall furnish to the ENGINEER, in duplicate, a description of the equipment and its identifying number.
3. Unless otherwise specified, manufacturer's ratings and manufacturer approved modifications shall be used to classify equipment for the determination of applicable rental rates. Equipment which has no direct power unit shall be powered by a unit of at least the minimum rating recommended by the manufacturer.
4. Individual pieces of equipment or tools having a replacement value of $200 or less, whether or not consumed by use, shall be considered to be small tools and no payment will be made therefor.
5. Rental time will not be allowed while equipment is inoperative due to breakdowns.
6. Equipment Rental Rates. Unless otherwise agreed in writing, the CONTRACTOR will be paid for the use of equipment at the rental rate listed for such equipment specified in the current edition of the following reference publication: "Rental Rate Blue Book" as published by Dataquest (a company of the Dunn and Bradstreet Corporation), 1290 Ridder Park Drive, San Jose, CA 95131, telephone number (800) 227-8444.

E. Equipment on the Work Site. The rental time to be paid for equipment on the work site shall be the time the equipment is in productive operation on the extra work being performed and, in addition, shall include the time required to move the equipment to the location of the extra work and return it to the original location or to another location requiring no more time than that required to return it to its original location; except, that moving time will not be paid if the equipment is used on other than the extra work, even though located at the site of the extra work. Loading and transporting costs will be allowed, in lieu of moving time, when the equipment is moved by means other than its own power, except that no payment will be made for loading and transporting costs when the equipment is used at the site of the extra work on other than the extra work. The following shall be used in computing the rental time of equipment on the work site.

1. When hourly rates are listed, any part of an hour less than 30 minutes of operation shall be considered to be 1/2-hour of operation, and any part of an hour in excess of 30 minutes will be considered one hour of operation.
2. When daily rates are listed, any part of a day less than 4 hours operation shall be considered to be 1/2-day of operation. When owner-operated equipment is used to perform extra work to be paid for on a time and materials basis, the CONTRACTOR will be paid for the equipment and operator, as set forth in Paragraphs (3), (4), and (5), following.
3. Payment for the equipment will be made in accordance with the provisions in Paragraph 11.3D, herein.
4. Payment for the cost of labor and subsistence or travel allowance will be made at the rates paid by the CONTRACTOR to other workers operating similar equipment already

on the work site, or in the absence of such labor, established by collective bargaining agreements for the type of worker and location of the extra work, whether or not the operator is actually covered by such an agreement. A labor surcharge will be added to the cost of labor described herein in accordance with the provisions of Paragraph 11.3B, herein, which surcharge shall constitute full compensation for payments imposed by state and federal laws and all other payments made to or on behalf of workers other than actual wages.

5. To the direct cost of equipment rental and labor, computed as provided herein, will be added the allowances for equipment rental and labor as provided in Paragraph 11.4, herein.

F. Specialty Work. Specialty work is defined as that work characterized by extraordinary complexity, sophistication, or innovation or a combination of the foregoing attributes which are unique to the construction industry. The following shall apply in making estimates for payment for specialty work:

1. Any bid item of WORK to be classified as Specialty Work shall be listed as such in the Supplementary General Conditions. Specialty work shall be performed by an entity especially skilled in the work to be performed. After validation of invoices and determination of market values by the ENGINEER, invoices for specialty work based upon the current fair market value thereof may be accepted without complete itemization of labor, material, and equipment rental costs.
2. When the CONTRACTOR is required to perform work necessitating special fabrication or machining process in a fabrication or a machine shop facility away from the job site, the charges for that portion of the work performed at the off-site facility may, by agreement, be accepted as specialty work and accordingly, the invoices for the work may be accepted without detailed itemization.
3. All invoices for specialty work will be adjusted by deducting all trade discounts offered or available, whether the discounts were taken or not. In lieu of the allowances for overhead and profit specified in Paragraph 11.4, herein, an allowance of 5 percent will be added to invoices for specialty work.

G. Sureties. All work performed hereunder shall be subject to all of the provisions of the Contract Documents and the CONTRACTOR's sureties shall be bound with reference thereto as under the original Agreement. Copies of all amendments to surety bonds or supplemental surety bonds shall be submitted to the OWNER for review prior to the performance of any work hereunder.

11.4 CONTRACTOR'S FEE

A. Extra work ordered on the basis of time and materials will be paid for at the actual necessary cost as determined by the ENGINEER, plus allowances for overhead and profit. The allowance for overhead and profit shall include full compensation for superintendence, bond and insurance premiums, taxes, field office expense, extended overhead, home office overhead, and all other items of expense or cost not included in the cost of labor, materials, or equipment provided for under Paragraph 11.3. The allowance for overhead and profit will be made in accordance with the following schedule:

Actual Overhead and Profit Allowance

Labor	15 percent
Materials	10 percent
Equipment	10 percent

To the sum of the costs and mark-ups provided for in this Article, one percent shall be added as compensation for bonding.

B. It is understood that labor, materials, and equipment may be furnished by the CONTRACTOR or by the Subcontractor on behalf of the CONTRACTOR. When all or any part of the extra work is performed by a Subcontractor, the allowance specified herein shall be applied to the labor, materials, and equipment costs of the Subcontractor, to which the CONTRACTOR may add 5 percent of the Subcontractor's total cost for the extra work. Regardless of the number of hierarchical tiers of Subcontractors, the 5 percent increase above the Subcontractor's total cost which includes the allowances for overhead and profit specified herein may be applied one time only.

11.5 EXCLUDED COSTS. The term "Cost of the Work" shall not include any of the following:

A. Payroll costs and other compensation of CONTRACTOR's officers, executives, principals (of partnership and sole proprietorships), general managers, engineers, estimators, attorneys' auditors, accountants, purchasing and contracting agents, expenditures, timekeepers, clerks and other personnel employed by CONTRACTOR whether at the site or in CONTRACTOR's principal or a branch office for general administration of the work, or not specifically covered by paragraph 11.3, all of which are to be considered administrative costs covered by the CONTRACTOR's fee.

B. Expenses of CONTRACTOR's principal and branch offices other than CONTRACTOR's office at the site.

C. Any part of CONTRACTOR's capital expenses, including interest on CONTRACTOR's capital employed for the WORK and charges against CONTRACTOR for delinquent payments.

D. Cost of premiums for all bonds and for all insurance whether or not CONTRACTOR is required by the Contract Documents to purchase and maintain the same (except for the cost of premiums covered by paragraph 11.4 above).

E. Costs due to the negligence of CONTRACTOR , any Subcontractor, or anyone directly or indirectly employed by any of them or for whose acts any of them may be liable, including but not limited to, the correction of Defective WORK, disposal of materials or equipment wrongly supplied and making good any damage to property.

F. Other overhead or general expense costs of any kind and the cost of any item not specifically and expressly included in paragraph 11.4.

ARTICLE 12 CHANGE OF CONTRACT TIME

12.1 GENERAL

A. The Contract Time may only be changed by a Change Order. Any claim for an extension of the Contract Time (or Milestones) shall be based on written notice delivered by the CONTRACTOR to the ENGINEER promptly (but in no event later than 30 days) after the occurrence of the event giving rise to the claim and stating the general nature of the claim. Notice of the extent of the claim with supporting data shall be delivered within 60 days after such occurrence (unless the ENGINEER allows an additional period of time to ascertain more accurate data in support of the claim) and shall be accompanied by the CONTRACTOR's written statement that the adjustment claimed is the entire adjustment to which the CONTRACTOR has reason to believe it is entitled as a result of the occurrence of said event. All claims for adjustment in the Contract Time shall be determined by the ENGINEER in accordance with Paragraph 9.8 if the OWNER and the CONTRACTOR cannot otherwise agree. No claim for an adjustment in the Contract Time will be valid if not submitted in accordance with the requirements of this Paragraph 12.1A. An increase in Contract Time does not mean that the Contractor is due an increase in Contract Price. Only compensable time extensions will result in an increase in Contract Price.

B. All time limits stated in the Contract Documents are of the essence of the Agreement.

C. Where CONTRACTOR is prevented from completing any part of the WORK within the Contract Times (or Milestones) due to delay beyond the control of CONTRACTOR, the Contract Times (or Milestones) will be extended in an amount equal to the time lost on the critical path of the project due to such delay if a claim is made therefor as provided in paragraph 12.1. Delays beyond the control of CONTRACTOR shall include, but not be limited to, acts or neglect by OWNER, acts or neglect of utility owners or other contractors performing other work as contemplated by Article 7, fires, floods, epidemics, unprecedented weather conditions or acts of God. Delays attributable to and within the control of a Subcontractor or Supplier shall be deemed to be delays within the control of CONTRACTOR.

D. Where CONTRACTOR is prevented from completing any part of the WORK within the Contract Times (or Milestones) due to delay beyond the control of both OWNER and CONTRACTOR, an extension of the Contract Times (or Milestones) in an amount equal to the time lost on the critical path of the project due to such delay shall be CONTRACTOR's sole and exclusive remedy for such delay. In no event shall the OWNER be liable to CONTRACTOR, any Subcontractor, any Supplier, or any other person or organization, or to any surety for or employee or agent of any of them, for damages arising out of or resulting from (i) delays caused by or within the control of CONTRACTOR, or (ii) delays beyond the control of both parties including but not limited to fires, floods, epidemics abnormal weather conditions, acts of God or acts or neglect by utility owners or other contractors performing other work as contemplated by Article 7.

12.2 EXTENSIONS OF TIME FOR DELAY DUE TO WEATHER. Contract Time may be extended by the ENGINEER because of delays in completion of the WORK due to unusually severe weather, provided that the CONTRACTOR shall, within 10 days of the beginning of any such delay, notify the ENGINEER in writing of the cause of delay and request an extension of Contract Time. The

ENGINEER will ascertain the facts and the extent of the delay and extend the time for completing the work when, in the ENGINEER's judgment, the findings of fact justify such an extension. Unprecedented, abnormal, or unusually severe weather will be defined as an event, or events, with a greater than 50-year recurrence interval, as determined by the National Weather Service, or equivalent State or Federal agency

ARTICLE 13 WARRANTY AND GUARANTEE; TESTS AND INSPECTIONS; CORRECTION, REMOVAL, OR ACCEPTANCE OF DEFECTIVE WORK

13.1 WARRANTY AND GUARANTEE. The CONTRACTOR warrants and guarantees to the OWNER and the ENGINEER that all work will be in accordance with the Contract Documents and will not be defective. Prompt notice of defects known to the OWNER or ENGINEER shall be given to the CONTRACTOR. All defective work, whether or not in place, may be rejected, corrected, or accepted as provided in this Article 13.

13.2 ACCESS TO WORK. OWNER, ENGINEER, their Consultants, sub-consultants, other representatives and personnel of OWNER, independent testing laboratories and governmental agencies with jurisdictional interests will have access to the WORK at reasonable times for their observation, inspecting and testing. CONTRACTOR shall provide them proper and safe conditions for such access and advise them of CONTRACTOR's site safety procedures and programs so that they may comply therewith as applicable.

13.3 TESTS AND INSPECTIONS

A. The CONTRACTOR shall give the ENGINEER timely notice of readiness of the WORK for all required inspections, tests, or approvals, and shall cooperate with inspection and testing personnel to facilitate required inspections or tests.

B. If Laws or Regulations of any public body having jurisdiction other than the OWNER require any WORK to specifically be inspected, tested, or approved, the CONTRACTOR shall pay all costs in connection therewith. The CONTRACTOR shall also be responsible for and shall pay all costs in connection with any inspection or testing required in connection with the OWNER's or the ENGINEER's acceptance of a Supplier of materials or equipment proposed as a substitution or (or-equal) to be incorporated in the WORK, or of materials or equipment submitted for review prior to the CONTRACTOR's purchase thereof for incorporation in the WORK. The cost of all inspections, tests, and approvals in addition to the above which are required by the Contract Documents shall be paid by the OWNER (unless otherwise specified).

C. The ENGINEER will make, or have made, such inspections and tests as the ENGINEER deems necessary to see that the WORK is being accomplished in accordance with the requirements of the Contract Documents. Unless otherwise specified in the Supplementary General Conditions, the cost of such inspection and testing will be borne by the OWNER. In the event such inspections or tests reveal non-compliance with the requirements of the Contract Documents, the CONTRACTOR shall bear the cost of corrective measures deemed necessary by the ENGINEER, as well as the cost of subsequent reinspection and retesting. Neither observations by the ENGINEER nor inspections, tests, or approvals by others shall relieve the CONTRACTOR from the CONTRACTOR's obligation to perform the WORK in accordance with the Contract Documents.

D. All inspections, tests, or approvals other than those required by Laws or Regulations of any public body having jurisdiction shall be performed by organizations acceptable to the ENGINEER and the CONTRACTOR.

E. If any WORK (including the work of others) that is to be inspected, tested, or approved is covered without written concurrence of the ENGINEER, it must, if requested by the ENGINEER, be uncovered for observation. Such uncovering shall be at the CONTRACTOR's expense unless the CONTRACTOR has given the ENGINEER timely notice of the CONTRACTOR's intention to perform such test or to cover the same and the ENGINEER has not acted with reasonable promptness in response to such notice.

F. If any WORK is covered contrary to the written request of the ENGINEER, it must, if requested by the ENGINEER, be uncovered for the ENGINEER's observation and recovered at the CONTRACTOR's expense.

G. If the ENGINEER considers it necessary or advisable that covered WORK be observed by the ENGINEER or inspected or tested by others, the CONTRACTOR, at the ENGINEER's request, shall uncover, expose, or otherwise make available for observation, inspection, or testing as the ENGINEER may require, that portion of the WORK in question, furnishing all necessary labor, material, and equipment. If it is found that such WORK is defective, the CONTRACTOR shall bear all direct, indirect, and consequential costs and damages of such uncovering, exposure, observation, inspection, and testing and of satisfactory reconstruction, including but not limited to fees and charges of engineers, attorneys, and other professionals. However, if such WORK is not found to be defective, the CONTRACTOR shall be allowed an increase in the Contract Price or an extension of the Contract Time, or both, directly attributable to such uncovering, exposure, observation, inspection, testing, and reconstruction; and, if the parties are unable to agree as to the amount or extent thereof, the CONTRACTOR may make a claim therefor as provided in Articles 11 and 12.

13.4 OWNER MAY STOP THE WORK. If the WORK is defective, or the CONTRACTOR fails to perform work in such a way that the completed WORK will conform to the Contract Documents, the OWNER may order the CONTRACTOR to stop the WORK, or any portion thereof, until the cause for such order has been eliminated; however, this right of the OWNER to stop the WORK shall not give rise to any duty on the part of the OWNER to exercise this right for the benefit of the CONTRACTOR or any other party.

13.5 CORRECTION OR REMOVAL OF DEFECTIVE WORK. If required by the ENGINEER, the CONTRACTOR shall promptly, either correct all defective work, whether or not fabricated, installed, or completed, or, if the WORK has been rejected by the ENGINEER, remove it from the site and replace it with non-defective work. The CONTRACTOR shall bear all direct, indirect and consequential costs and damages of such correction or removal, including but not limited to fees and charges of engineers, attorneys, and other professionals made necessary thereby.

13.6 ONE YEAR CORRECTION PERIOD

A. If within one year after the date of Substantial Completion or such longer period of time as may be prescribed by Laws or Regulations or by the terms of any applicable special guarantee required by the Contract Documents or by any specific provision of the Contract Documents, any work is found to be defective, the CONTRACTOR shall promptly, without cost to the OWNER and in accordance with OWNER's written notification, (i) correct such Defective WORK, or, if it has been rejected by the OWNER, remove it from the site and replace it with non-defective work, and (ii) satisfactorily correct or remove and replace any damage to other work of others resulting therefrom. If the CONTRACTOR does not promptly comply with such notification, or in an emergency where delay would cause serious risk of loss or damage, the OWNER may have the Defective WORK corrected or the rejected WORK removed and replaced, and all direct, indirect, and consequential costs and damages of such removal and replacement including but not limited to fees and charges of engineers, attorneys and other professionals will be paid by the CONTRACTOR.

B. Where Defective WORK (and damage to other WORK resulting therefrom) has been corrected, removed or replaced under this paragraph 13.6, the correction period hereunder with respect to such WORK will be extended for an additional period of one year after such correction or removal and replacement has been satisfactorily completed.

13.7 ACCEPTANCE OF DEFECTIVE WORK. If, instead of requiring correction or removal and replacement of defective work, the OWNER prefers to accept the WORK, the OWNER may do so. The CONTRACTOR shall bear all direct, indirect, and consequential costs attributable to the OWNER's evaluation of and determination to accept such defective work. If any such acceptance occurs prior to final payment, a Change Order will be issued incorporating the necessary revisions in the Contract Documents with respect to the WORK, and the OWNER shall be entitled to an appropriate decrease in the Contract Price.

ARTICLE 14 PAYMENTS TO CONTRACTOR AND COMPLETION

14.1 SCHEDULE OF VALUES (LUMP SUM PRICE BREAKDOWN). The schedule of values or lump sum price breakdown established as provided in the General Requirements shall serve as the basis for progress payments and will be incorporated into a form of Application for Payment acceptable to the ENGINEER.

14.2 UNIT PRICE BID SCHEDULE. Progress payments on account of Unit Price work will be based on the number of units completed.

14.3 APPLICATION FOR PROGRESS PAYMENT

A. Unless otherwise prescribed by law, on the 25th of each month, the CONTRACTOR shall submit to the ENGINEER for review, an Application for Payment filled out and signed by the CONTRACTOR covering the WORK completed as of the date of the Application and accompanied by such supporting documentation as is required by the Contract Documents.

B. The Application for Payment shall identify, as a sub-total, the amount of the CONTRACTOR'S Total Earnings to Date, plus the Value of Materials Stored at the Site which have not yet been incorporated in the WORK, and less a deductive adjustment for

materials installed which were not previously incorporated in the WORK, but for which payment was allowed under the provisions for payment for Materials Stored at the Site, but not yet incorporated in the WORK.

C. The Net Payment Due the CONTRACTOR shall be the above-mentioned subtotal from which shall be deducted the total amount of all previous payments made to the CONTRACTOR. Progress payments will be paid in full in accordance with Article 14 of the General Conditions until 90% of the Contract Price has been paid. The remaining 10% of the Contract Price amount may be withheld until:

1. final inspection has been made;
2. completion of the Project; and
3. acceptance of the Project by the OWNER.

D. The Value of Materials Stored at the Site shall be an amount equal to the specified percent of the value of such materials as set forth in the Supplementary General Conditions. Said amount shall be based upon the value of all acceptable materials and equipment not incorporated in the WORK but delivered and suitably stored at the site or at another location agreed to in writing; provided, each such individual item has a value of more than $5,000.00 and will become a permanent part of the WORK. The Application for Payment shall also be accompanied by an invoice (including shipping), a certification that the materials meet the applicable contract specifications, and any evidence required by the OWNER that the materials and equipment are covered by appropriate property insurance and other arrangements to protect the OWNER's interest therein, all of which will be satisfactory to the OWNER. Payment for materials will not constitute final acceptance. It shall be the CONTRACTOR’s responsibility to protect the material from damage, theft, loss, or peril while in storage. Unless otherwise prescribed by law, the Value of Materials Stored at the Site shall be paid at the invoice amount up to a maximum of 85% of the Contract Price for those items.

14.4 CONTRACTOR'S WARRANTY OF TITLE. The CONTRACTOR warrants and guarantees that title to all work, materials, and equipment covered by an Application for Payment, whether incorporated in the WORK or not, will pass to the OWNER no later than the time of payment free and clear of all liens.

14.5 REVIEW OF APPLICATIONS FOR PROGRESS PAYMENT

A. The ENGINEER will, within 7 days after receipt of each Application for Payment, either indicate in writing a recommendation of payment and present the Application to the OWNER, or return the Application to the CONTRACTOR indicating in writing the ENGINEER's reasons for refusing to recommend payment. In the later case, the CONTRACTOR may make the necessary corrections and resubmit the Application. If the ENGINEER still disagrees with a portion of the Application, it will submit the Application recommending the undisputed portion of the Application to the OWNER for payment and provide reasons for recommending non-payment of the disputed amount. Thirty days after presentation of the Application for Payment with the ENGINEER's recommendation, the amount recommended will (subject to the provisions of Paragraph 14.5B) become due and when due will be paid by the OWNER to the CONTRACTOR.

B. The OWNER may refuse to make payment of the full amount recommended by the ENGINEER because claims have been made against the OWNER on account of the CONTRACTOR's performance of the WORK or Liens have been filed in connection with the WORK or there are other items entitling the OWNER to a credit against the amount recommended, but the OWNER must give the CONTRACTOR written notice within 7 days (with a copy to the ENGINEER) stating the reasons for such action.

14.6 PARTIAL UTILIZATION

A. The OWNER shall have the right to utilize or place into service any item of equipment or other usable portion of the WORK prior to completion of the WORK. Whenever the OWNER plans to exercise said right, the CONTRACTOR will be notified in writing by the OWNER, identifying the specific portion or portions of the WORK to be so utilized or otherwise placed into service.

B. It shall be understood by the CONTRACTOR that until such written notification is issued, all responsibility for care and maintenance of all of the WORK shall be borne by the CONTRACTOR. Upon issuance of said written notice of partial utilization, the OWNER will accept responsibility for the protection and maintenance of all such items or portions of the WORK described in the written notice.

C. The CONTRACTOR shall retain full responsibility for satisfactory completion of the WORK, regardless of whether a portion thereof has been partially utilized by the OWNER and the CONTRACTOR's one year correction period shall commence only after the date of Substantial Completion for the WORK.

14.7 SUBSTANTIAL COMPLETION. When the CONTRACTOR considers the WORK ready for its intended use the CONTRACTOR shall notify the OWNER and the ENGINEER in writing that the WORK is substantially complete. The CONTRACTOR will attach to this request a list of all work items that remain to be completed and a request that the ENGINEER prepare a Notice of Completion. Within a reasonable time thereafter, the OWNER, the CONTRACTOR, and the ENGINEER shall make an inspection of the WORK to determine the status of completion. If the ENGINEER does not consider the WORK substantially complete, or the list of remaining work items to be comprehensive, the ENGINEER will notify the CONTRACTOR in writing giving the reasons therefor. If the ENGINEER considers the WORK substantially complete, the ENGINEER will prepare and deliver to the OWNER, for its execution and recording, the Notice of Completion signed by the ENGINEER and CONTRACTOR, which shall fix the date of Substantial Completion.

14.8 FINAL APPLICATION FOR PAYMENT. After the CONTRACTOR has completed all of the remaining work items referred to in Paragraph 14.7 and delivered all maintenance and operating instructions, schedules, guarantees, Bonds, certificates of inspection, record as-built documents (as provided in the General Requirements) and other documents, all as required by the Contract Documents, and after the ENGINEER has indicated that the WORK is acceptable, the CONTRACTOR may make application for final payment following the procedure for progress payments. The final Application for Payment shall be accompanied by all documentation called for in the Contract Documents, together with complete and legally effective releases or waivers (satisfactory to the OWNER) of all liens arising out of or filed in connection with the WORK.

14.9 FINAL PAYMENT AND ACCEPTANCE

A. If, on the basis of the ENGINEER's observation of the WORK during construction and final inspection, and the ENGINEER's review of the final Application for Payment and accompanying documentation, all as required by the Contract Documents, the ENGINEER is satisfied that the WORK has been completed and the CONTRACTOR's other obligations under the Contract Documents have been fulfilled, the ENGINEER will, within 14 days after receipt of the final Application for Payment, indicate in writing the ENGINEER's recommendation of payment and present the Application to the OWNER for payment.

B. After acceptance of the WORK by the OWNER's governing body, the OWNER will make final payment to the CONTRACTOR of the amount remaining after deducting all prior payments and all amounts to be kept or retained under the provisions of the Contract Documents, including the following items:

1. Liquidated damages, as applicable.
2. Two times the value of outstanding items of correction work or punch list items yet uncompleted or uncorrected, as applicable. All such work shall be completed or corrected to the satisfaction of the OWNER within the time stated on the Notice of Completion, otherwise the CONTRACTOR does hereby waive any and all claims to all monies withheld by the OWNER to cover the value of all such uncompleted or uncorrected items.

14.10 RELEASE OF RETAINAGE AND OTHER DEDUCTIONS

A. After executing the necessary documents to initiate the lien period, and not more than 45 days thereafter (based on a 30-day lien filing period and 15-day processing time), the OWNER will release to the CONTRACTOR the retainage funds withheld pursuant to the Agreement, less any deductions to cover pending claims against the OWNER pursuant to Paragraph 14.5B.

B. After filing of the necessary documents to initiate the lien period, the CONTRACTOR shall have 30 days to complete any outstanding items of correction work remaining to be completed or corrected as listed on a final punch list made a part of the Notice of Completion. Upon expiration of the 45 days, referred to in Paragraph 14.10A, the amounts withheld pursuant to the provisions of Paragraph 14.9B herein, for all remaining work items will be returned to the CONTRACTOR; provided, that said work has been completed or corrected to the satisfaction of the OWNER within said 30 days. Otherwise, the CONTRACTOR does hereby waive any and all claims for all monies withheld by the OWNER under the Contract to cover 2 times the value of such remaining uncompleted or uncorrected items.

14.11 CONTRACTOR'S CONTINUING OBLIGATION. The CONTRACTOR's obligation to perform and complete the WORK in accordance with the Contract Documents shall be absolute. Neither recommendation of any progress or final payment by the ENGINEER, nor the issuance of a Notice of Completion, nor any payment by the OWNER to the CONTRACTOR under the Contract Documents, nor any use or occupancy of the WORK or any part thereof by the OWNER, nor any act of acceptance by the OWNER nor any failure to do so, nor any review of a Shop Drawing or sample submittal, will constitute an acceptance of work not in accordance with the Contract Documents or a release of the CONTRACTOR's obligation to perform the WORK in accordance with the Contract Documents.

14.12 FINAL PAYMENT TERMINATES LIABILITY OF OWNER. Final payment is defined as the last progress payment made to the CONTRACTOR for earned funds, less monies withheld as applicable, pursuant to Paragraph 14.10A. The acceptance by the CONTRACTOR of the final payment referred to in Paragraph 14.9 herein, shall be a release of the OWNER and its agents from all claims of liability to the CONTRACTOR for anything done or furnished for, or relating to, the WORK or for any act of neglect of the OWNER or of any person relating to or affecting the WORK, except demands against the OWNER for the remainder, if any, of the amounts kept or retained under the provisions of Paragraph 14.9 herein; and excepting pending, unresolved claims filed prior to the date of the Notice of Completion.

ARTICLE 15 SUSPENSION OF WORK AND TERMINATION

15.1 SUSPENSION OF WORK BY OWNER. The OWNER, acting through the ENGINEER, may, at any time and without cause, suspend the WORK or any portion thereof for a period of not more than 90 days by notice in writing to the CONTRACTOR. The CONTRACTOR shall resume the WORK on receipt from the ENGINEER of a notice of resumption of work. The CONTRACTOR shall be allowed an increase in the Contract Price or an extension of the Contract Time, or both, directly attributable to any suspension if the CONTRACTOR makes an approved claim therefor as provided in Articles 11 and 12.

15.2 TERMINATION OF AGREEMENT BY OWNER (CONTRACTOR DEFAULT)

A. In the event of default by the CONTRACTOR, the OWNER may give 10 days written notice to the CONTRACTOR of OWNER's intent to terminate the Agreement and provide the CONTRACTOR an opportunity to remedy the conditions constituting the default. It shall be considered a default by the CONTRACTOR whenever CONTRACTOR shall: (1) declare bankruptcy, become insolvent, or assign its assets for the benefit of its creditors; (2) fail to provide materials or quality of work meeting the requirements of the Contract Documents; (3) disregard or violate provisions of the Contract Documents or ENGINEER's instructions; (4) fail to prosecute the WORK according to the approved progress schedule; or, (5) fail to provide a qualified superintendent, competent workers, or materials or equipment meeting the requirements of the Contract Documents. If the CONTRACTOR fails to remedy the conditions constituting default within the time allowed, the OWNER may then issue the Notice of Termination.

B. In the event the Agreement is terminated in accordance with Paragraph 15.2A, herein, the OWNER may take possession of the WORK and may complete the WORK by whatever method or means the OWNER may select. The cost of completing the WORK shall be deducted from the balance which would have been due the CONTRACTOR had the Agreement not been terminated and the WORK completed in accordance with the Contract Documents. If such cost exceeds the balance which would have been due, the CONTRACTOR shall pay the excess amount to the OWNER. If such cost is less than the balance which would have been due, the CONTRACTOR shall not have claim to the difference.

15.3 TERMINATION OF AGREEMENT BY OWNER (FOR CONVENIENCE). The OWNER may terminate the Agreement at any time if it is found that reasons beyond the control of either the OWNER or CONTRACTOR make it impossible or against the OWNER's interests to complete the WORK. In such a case, the CONTRACTOR shall have no claims against the OWNER except: (1) for

the value of work performed up to the date the Agreement is terminated; and, (2) for the cost of materials and equipment on hand, in transit, or on definite commitment, as of the date the Agreement is terminated which would be needed in the WORK and which meet the requirements of the Contract Documents. The value of work performed and the cost of materials and equipment delivered to the site, as mentioned above, shall be determined by the ENGINEER in accordance with the procedure prescribed for the making of the final application for payment and payment under Paragraphs 14.8 and 14.9.

15.4 TERMINATION OF AGREEMENT BY CONTRACTOR. The CONTRACTOR may terminate the Agreement upon 10 days written notice to the OWNER, whenever: 1) the WORK has been suspended under the provisions of Paragraph 15.1, herein, for more than 90 consecutive days through no fault or negligence of the CONTRACTOR, and notice to resume work or to terminate the Agreement has not been received from the OWNER within this time period; or, 2) the OWNER should fail to pay the CONTRACTOR any monies due him in accordance with the terms of the Contract Documents and within 60 days after presentation to the OWNER by the CONTRACTOR of a request therefor, unless within said 10-day period the OWNER shall have remedied the condition upon which the payment delay was based. In the event of such termination, the CONTRACTOR shall have no claims against the OWNER except for those claims specifically enumerated in Paragraph 15.3, herein, and as determined in accordance with the requirements of said paragraph.

ARTICLE 16 MISCELLANEOUS

16.1 GIVING NOTICE. Whenever any provision of the Contract Documents requires the giving of written notice, it will be deemed to have been validly given if delivered in person to the individual or to a member of the firm or to an officer of the corporation for whom it is intended, or if delivered at or sent by registered or certified mail, postage prepaid, to the last business address known to the giver of the notice.

16.2 RIGHTS IN AND USE OF MATERIALS FOUND ON THE WORK

A. The CONTRACTOR may use on the Project, with ENGINEER's approval, such stone, gravel, sand, or other material determined suitable by the ENGINEER, as may be found in the excavation. The CONTRACTOR will be paid for the excavation of such material at the corresponding contract unit price. No additional payment will be made for utilizing the material from excavation as borrow, or select borrow.

B. The CONTRACTOR shall replace, at its own expense, with other acceptable material, all of that portion of the excavated material so removed and used which was needed for use on the project. No charge for the materials so used will be made against the CONTRACTOR except that the CONTRACTOR shall be responsible for payment of any royalties required.

C. The CONTRACTOR shall not excavate or remove any material from within the Project location which is not within the grading limits, as indicated by the slope and grade lines, without written authorization from the ENGINEER.

D. In the event the CONTRACTOR has processed materials from OWNER-furnished sources in excess of the quantities required for performance of this contract, including any waste material produced as a by-product, the CBJ may retain possession of such materials without obligation to reimburse the CONTRACTOR for the cost of their production. When such

materials are in a stockpile, the ENGINEER may require: That it remain in stockpile; the CONTRACTOR level such stockpile(s); or that the CONTRACTOR remove such materials and restore the premises to a satisfactory condition at the CONTRACTOR's expense. This provision shall not preclude the CBJ from arranging with the CONTRACTOR to produce material over and above the contract needs, payment for which shall be by written agreement between the CBJ and the CONTRACTOR.

E. Unless otherwise provided, the material from any existing old structure may be used temporarily by the CONTRACTOR in the erection of the new structure. Such material shall not be cut or otherwise damaged except with the approval of the ENGINEER.

16.3 RIGHT TO AUDIT. If the CONTRACTOR submits a claim to the OWNER for additional compensation, the OWNER shall have the right, as a condition to considering the claim, and as a basis for evaluation of the claim, and until the claim has been settled, to audit the CONTRACTOR's books to the extent they are relevant. This right shall include the right to examine books, records, documents, and other evidence and accounting procedures and practices, sufficient to discover and verify all direct and indirect costs of whatever nature claimed to have been incurred or anticipated to be incurred and for which the claim has been submitted. The right to audit shall include the right to inspect the CONTRACTOR's plants, or such parts thereof, as may be or have been engaged in the performance of the WORK. The CONTRACTOR further agrees that the right to audit encompasses all subcontracts and is binding upon Subcontractors. The rights to examine and inspect herein provided for shall be exercisable through such representatives as the OWNER deems desirable during the CONTRACTOR's normal business hours at the office of the CONTRACTOR. The CONTRACTOR shall make available to the OWNER for auditing, all relevant accounting records and documents, and other financial data, and upon request, shall submit true copies of requested records to the OWNER.

16.4 ARCHEOLOGICAL OR HISTORICAL DISCOVERIES. When the CONTRACTOR's operation encounters prehistoric artifacts, burials, remains of dwelling sites, paleontological remains, such as shell heaps, land or sea mammal bones or tusks, or other items of historical significance, the CONTRACTOR shall cease operations immediately and notify the ENGINEER. No artifacts or specimens shall be further disturbed or removed from the ground and no further operations shall be performed at the site until so directed. Should the ENGINEER order suspension of the CONTRACTOR's operations in order to protect an archaeological or historical finding, or order the CONTRACTOR to perform extra work, such order(s) shall be covered by an appropriate contract change document.

16.5 CONSTRUCTION OVER OR ADJACENT TO NAVIGABLE WATERS. All work over, on, or adjacent to navigable waters shall be so conducted that free navigation of the waterways will not be interfered with and the existing navigable depths will not be impaired, except as allowed by permit issued the U.S. Coast Guard and/or the U.S. Army Corps of Engineers, as applicable.

16.6 GRATUITY AND CONFLICT OF INTEREST. The CONTRACTOR agrees to not extend any loan, gratuity or gift of money of any form whatsoever to any employee or elected official of the OWNER, nor will the CONTRACTOR rent or purchase any equipment or materials from any employee or elected official of the OWNER, or to the best of the CONTRACTOR’s knowledge, from any agent of any employee or elected official of the OWNER. Before final payment, the CONTRACTOR shall execute and furnish the OWNER an affidavit certifying that the CONTRACTOR has complied with the above provisions of the contract.

16.7 SUITS OF LAW CONCERNING THE WORK

A. Should a suit of law be entered into, either by the CONTRACTOR (or the CONTRACTOR's surety) against the OWNER, or by the OWNER against the CONTRACTOR (or the CONTRACTOR's surety), the suit of law shall be tried in the First Judicial District of Alaska.

B. If one of the questions at issue is the satisfactory performance of the work by the CONTRACTOR and should the appropriate court of law judge the work of the CONTRACTOR to be unsatisfactory, then the CONTRACTOR (or the CONTRACTOR's surety) shall reimburse the OWNER for all legal and all other expenses (as may be allowed and set by the court) incurred by the OWNER because of the suit of the law and, further, it is agreed that the OWNER may deduct such expense from any sum or sums then, or any that become due the CONTRACTOR under the contract.

16.8 CERTIFIED PAYROLLS

A. All CONTRACTORs or Subcontractor who perform work on a public construction contract for the OWNER shall file a certified payroll with the Alaska Department of Labor before Friday of each week that covers the preceding week (Section 14-2-4 ACLA 1949; am Section 4 ch 142 SLA 1972).

B. In lieu of submitting the State payroll form, the CONTRACTOR's standard payroll form may be submitted, provided it contains the information required by AS 36.05.040 and a statement that the CONTRACTOR is complying with AS 36.10.010.

C. A contractor or subcontractor, who performs work on public construction in the State, as defined by AS 36.95.010(3), shall pay not less than the current prevailing rate of wages as issued by the Alaska Department of Labor before the end of the pay period. (AS 36.05.010).

16.9 PREVAILING WAGE RATES

A. Wage rates for Laborers and Mechanics on Public Contracts, AS 36.05.070. The CONTRACTOR, or Subcontractors, shall pay all employees unconditionally and not less than once a week. Wages may not be less than those stated in Paragraph 16.8C, regardless of the contractual relationship between the CONTRACTOR or Subcontractors and laborers, mechanics, or field surveyors. The scale of wages to be paid shall be posted by the CONTRACTOR in a prominent, easily accessible place at the site of the WORK.

B. Failure to Pay Agreed Wages, AS 36.05.080. If it is found that a laborer, mechanic, or field surveyor employed by the CONTRACTOR or Subcontractor has been, or is being, paid a rate or wages less than the established rate, the OWNER may, by written notice, terminate the CONTRACTOR or Subcontractors right to proceed with the work. The OWNER may prosecute the work to completion by contract or otherwise, and the CONTRACTOR and sureties will be held liable to the OWNER for excess costs for completing the WORK. (Section 2 ch 52 SLA 1959).

C. Listing Contractor's Who Violate Contracts, AS 36.05.090. In addition, a list giving the names of persons who have disregarded the rights of their employees shall be distributed to all departments of State government and all political subdivisions. No person appearing on this

list, and no firm, corporation, partnership or association in which the person has an interest, may work as a CONTRACTOR or Subcontractor on a public construction contract for the State, or a political subdivision of the state, until three years after the date of publication of the list. (Section 3 ch 52 SLA 1959; am Section 9 ch 142 SLA).

16.10 EMPLOYMENT REFERENCE. Workers employed in the execution of the contract by the CONTRACTOR or by any Subcontractor under this contract shall not be required or permitted to labor more than 8 hours a day or 40 hours per week in violation of the provisions of the Alaska Wage and Hour Act, Section 23.10.060.

16.11 COST REDUCTION INCENTIVE

A. At any time within 45 days after the date of the Notice of Award, the CONTRACTOR may submit to the ENGINEER in writing, proposals for modifying the plans, specifications, or other requirements of this contract for the sole purpose of reducing the total cost of construction. The cost reduction proposal shall not impair in any manner the essential functions or characteristics of the project, including but not limited to, service life, economy of operation, ease of maintenance, desired appearance or design and safety standards.

B. The cost reduction proposal shall contain the following information:

1. Description of both the existing contract requirements for performing the WORK and the proposed changes.
2. An itemization of the contract requirements that must be changed if the proposal is adopted.
3. A detailed estimate of the time required and the cost of performing the WORK under both the existing contract and the proposed change.
4. A statement of the date by which the CONTRACTOR must receive the decision from the OWNER on the cost reduction proposal.
5. The contract items of WORK effected by the proposed changes including any quantity variations.
6. A description and estimate of costs the OWNER may incur in implementing the proposed changes, such as test and evaluation and operating and support costs.
7. A prediction of any effects the proposed change would have on future operations and maintenance costs to the OWNER.

C. The provisions of this section shall not be construed to require the OWNER to consider any cost reduction proposal which may be submitted; nor will the OWNER be liable to the CONTRACTOR for failure to accept or act upon any cost reduction proposal submitted, or for delays to the work attributable to the consideration or implementation of any such proposal.

D. If a cost reduction proposal is similar to a change in the plans or specifications for the project under consideration by the OWNER at the time the proposal is submitted, the OWNER will not accept such proposal and reserves the right to make such changes without compensation to the CONTRACTOR under the provisions of this section.

E. The CONTRACTOR shall continue to perform the work in accordance with the requirements of the contract until an executed Change Order incorporating the cost reduction proposal has

been issued. If any executed Change Order has not been issued by the date upon which the CONTRACTOR's cost reduction proposal specifies that a decision should be made by the OWNER, in writing, the cost reduction proposal shall be considered rejected.

F. The OWNER, shall be the sole judge of the acceptability of a cost reduction proposal and of the estimated net savings in Contract Time and construction costs resulting from the adoption of all or any part of such proposal. Should the CONTRACTOR disagree with OWNER's decision on the cost reduction proposal, there is no further consideration. The OWNER reserves the right to make final determination.

G. If the CONTRACTOR's cost reduction proposal is accepted in whole or in part, such acceptance will be made by a contract Change Order, which specifically states that the change is executed pursuant to this cost reduction proposal section. Such Change Order shall incorporate the changes in the plans and specifications which are necessary to permit the cost reduction proposal or such part of it as has been accepted to be put into effect and shall include any conditions upon which the OWNER's approval is based, if such approval is conditional. The Change Order shall also describe the estimated net savings in the cost of performing the work attributable to the cost reduction proposal, and shall further provide that the contract cost be adjusted by crediting the OWNER with the estimated net savings amount.

H. Acceptance of the cost reduction proposal and performance of the work does not extend the time of completion of the contract, unless specifically provided in the Change Order authorizing the use of the submitted proposal. Should the adoption of the cost reduction proposal result in a Contract Time savings, the total Contract Time shall be reduced by an amount equal to the time savings realized.

I. The amount specified to the CONTRACTOR in the Change Order accepted in the cost reduction proposal shall constitute full compensation for the performance of WORK. No claims for additional costs as a result of the changes specified in the cost reduction proposal shall be allowed.

J. The OWNER reserves the right to adopt and utilize any approved cost reduction proposal for general use on any contract administered when it is determined suitable for such application. Cost reduction proposals identical, similar, or previously submitted will not be accepted for consideration if acceptance and compensation has previously been approved. The OWNER reserves the right to use all or part of any cost reduction proposal without obligation or compensation of any kind to the CONTRACTOR.

K. The CONTRACTOR shall bear the costs, if any, to revise all bonds and insurance requirements for the project, to include the cost reduction WORK.

END OF SECTION

SECTION 00800 - SUPPLEMENTARY GENERAL CONDITIONS

GENERAL. These Supplementary General Conditions make additions, deletions, or revisions to the General Conditions as indicated herein. All provisions which are not so added, deleted, or revised remain in full force and effect. Terms used in these Supplementary General Conditions which are defined in the General Conditions have the meanings assigned to them in the General Conditions.

SGC 1 DEFINITIONS. ***Remove*** the definition for Contract Documents and ***replace*** with the following:

Contract Documents – The Table of Contents, Notice Inviting Bids, Instructions to Bidders, Bid Forms (including the Bid, Bid Schedule(s), Subcontractor Report, Bid Bond, and all required certificates and affidavits), Agreement, Performance Bond, Payment Bond, General Conditions, Supplementary General Conditions, Alaska Labor Standards, Reporting, and Prevailing Wage Rate Determination, Special Provisions, Standard Specifications, Technical Specifications, Drawings, Permits, and all Addenda, and Change Orders executed pursuant to the provisions of the Contract Documents.

SGC 2.2 COPIES OF DOCUMENTS. ***Add*** the following:

The OWNER shall furnish to the CONTRACTOR two (2) hard copies of the Contract Documents which will include bound reduced Drawings and one (1) electronic copy in pdf format. Additional copies of contract documents are the responsibility of the contractor.

SGC 3.2 ORDER OF PRECEDENCE OF CONTRACT DOCUMENTS. ***Remove*** No. 12. Technical Specifications and No. 13. Drawings, and ***add*** the following:

12. Special Provisions Section
13. Standard Specifications for Civil Engineering Projects and Subdivision Improvements December 2003 Edition with current Errata Sheets.
14. Drawings.

SGC 4.2 PHYSICAL CONDITIONS - SUBSURFACE AND EXISTING STRUCTURES. ***Add*** the following:

C. In the preparation of the Contract Documents, the Engineer of Record has relied upon field measurements and visual inspection of the existing structures and surface conditions.

SGC - 4.6 USE OF THE CBJ/STATE LEMON CREEK GRAVEL PIT. ***Add*** the following.

The CBJ/State Lemon Creek Gravel Pit is not available for this Project.

SGC 5.1 PERFORMANCE, PAYMENT, AND OTHER BONDS. The Contractor shall furnish Performance and Payment Bonds in the amount of 100% of the Bid.

SGC 5.2 INSURANCE AMOUNTS. The limits of liability for the insurance required by Paragraph 5.2 of the General Conditions shall provide coverage for not less than the following amounts or greater where required by Laws and Regulations**.** The CONTRACTOR must provide certification of proper insurance coverage and amendatory endorsements or copies of the applicable policy language affecting coverage required in this agreement to the City and Borough of Juneau. All certificates of insurance supplied to the OWNER shall state that the OWNER is named as **"Additional Insured for any and all work performed for the City & Borough of Juneau" for the Commercial General Liability policy and any other policies, if required**

in this Section. NOTE: This requirement has changed. The OWNER no longer requires certificates of insurance referencing project names and contract numbers.

Delete paragraph C and ***Replace*** with the following paragraph C:

C. The CONTRACTOR shall furnish the OWNER with certificates showing the type, amount, class of operations covered, effective dates and dates of expiration of policies. Failure of CBJ to demand such certificate or other evidence of full compliance with these insurance requirements or failure of CBJ to identify a deficiency from evidence that is provided shall not be construed as a waiver of the obligation of the Contractor to maintain the insurance required by this contract. The coverage afforded will not be cancelled, reduced in coverage, or renewal refused until at least 30 days' prior written notice has been given to the OWNER by the CONTRACTOR. **All such insurance required herein (except for Workers' Compensation and Employer's Liability) shall name the OWNER, its Consultants and subconsultants and their officers, directors, agents, and employees as "additional insureds" under the policies.**

The CONTRACTOR shall purchase and maintain the following insurance:

1. Workers' Compensation and Employer's Liability. This insurance shall protect the CONTRACTOR against all claims under applicable state workers' compensation laws. The CONTRACTOR shall also be protected against claims for injury, disease, or death of employees which, for any reason, may not fall within the provisions of a Workers' Compensation law. The CONTRACTOR shall require each Subcontractor similarly to provide Workers' Compensation Insurance for all of the latter's employees to be engaged in such work unless such employees are covered by the protection afforded by the CONTRACTOR's Workers' Compensation Insurance. In case any class of employees is not protected, under the Workers' Compensation Statute, the CONTRACTOR shall provide and shall cause each subcontractor to provide adequate employer's liability insurance for the protection of such of its employees as are not otherwise protected. **The CONTRACTOR grants a waiver of any right to subrogation against the OWNER by virtue of the payment of any loss under such insurance.** This provision applies regardless of whether or not the OWNER has received a waiver of subrogation endorsement from the insurer.

Workers' Compensation: (under Paragraph 5.2C.1 of the General Conditions) as in accordance with AS 23.30.045:

a. State: Statutory
b. Applicable Federal (e.g., Longshore): Statutory

Note: If the WORK called for in the Contract Documents involves work in or on any navigable waters, the CONTRACTOR shall provide Workers' Compensation coverage which shall include coverage under the Longshore and Harbor Workers' Compensation Act, the Jones Act, and any other coverage required under Federal or State laws pertaining to workers in or on navigable waters.

a. Employers Liability

Bodily Injury by Accident:	$100,000.00	Each Accident
Bodily Injury by Disease:	$100,000.00	Each Employee
Bodily Injury by Disease:	$500,000.00	Policy Limit

1. CONTRACTOR agrees to waive all rights of subrogation against the OWNER for WORK performed under contract.
2. If CONTRACTOR directly utilizes labor outside of the State of Alaska in the prosecution of the WORK, "Other States" endorsement shall be required as a condition of the contract.

2. Commercial General Liability (CGL), including products and completed operations, property damage, bodily injury and personal and advertising injury, with limits no less than $1,000,000 each occurrence and $2,000,000 aggregate. (under Paragraph 5.2C.2 of the General Conditions) **This insurance policy is to contain, or be endorsed to contain, additional insured status for the CBJ, its officers, officials, employees, and volunteers.** If Additional insured status is provided in the form of an endorsement to the Contractor's insurance, the endorsement shall be at least as broad as ISO Form CG 20 10 11 85 or **both** CG 20 10, CG 20 26, CG 20 33, or CG 20 38; **and** CG 20 37 forms if later revisions used).

3. Commercial Automobile Liability: (under Paragraph 5.2C.3 of the General Conditions) including Owned, Hired, and Non-Owned Vehicles:

   Combined Single Limit, Bodily Injury and Property Damage $1,000,000.00

   This insurance policy is to contain, or be endorsed to contain, additional insured status for the CBJ, its officers, officials, employees, and volunteers The CONTRACTOR shall require each Subcontractor similarly to provide Commercial Automobile Liability Insurance for all of the latter's employees to be engaged in such WORK unless such employees are covered by the protection afforded by the CONTRACTOR's Commercial Automobile Liability Insurance.

Add the following paragraphs:

C. Builder's Risk: CONTRACTOR is not required to obtain a Builder's Risk insurance policy for this project.

D. All Subcontractors are required to secure and maintain the insurance coverages listed above, unless otherwise noted.

E. If the CONTRACTOR maintains higher limits than the minimums shown above, the OWNER requires and shall be entitled to coverage for the higher limits maintained by the CONTRACTOR. Any available insurance proceeds in excess of the specified minimum limits of insurance and coverage shall be available to the OWNER.

F. Policies shall also specify insurance provided by CONTRACTOR will be considered primary and not contributory to any other insurance available to the OWNER.

G. Should any of the policies described above be cancelled before the expiration date thereof, notice will be delivered in accordance with the policy provisions.

SGC 6.5 CONCERNING SUBCONTRACTORS, SUPPLIERS, AND OTHERS. ***Add*** the following:

B. The CONTRACTOR shall perform not less than 40% of the WORK with its own forces (i.e., without subcontracting). The 40% requirement shall be understood to mean that the CONTRACTOR shall perform, with its own organization, WORK amounting to at least 40% of the original contract amount. The 40% requirement will be calculated based upon the total of the subcontract amounts submitted for Contract Award, and any other information requested by the OWNER from the apparent low Bidder.

SGC 6.5 CONCERNING SUBCONTRACTORS, SUPPLIERS, AND OTHERS, ***Add*** the following paragraph:

C. CONTRACTOR must pay Subcontractors and/or Suppliers within 30 days of receiving payment from the OWNER, if that payment was made for Work performed by the Subcontractor and/or materials received. Failure to pay Subcontractors within 30 days of receiving payment from which Subcontractor and/or Supplier is to be paid may result in the OWNER initiating debarment proceedings as prescribed in the City and Borough of Juneau Purchasing Code. *The 30 day City and Borough of Juneau requirement does not supersede AS 36.90.210.*

SGC 6.6 PERMITS, ***Add*** the following paragraph:

D. Contractor is responsible for obtaining a Hot Works permit from the CBJ Permit Center, if performing work which requires such a permit. Work requiring a Hot Works Permit includes but is not limited to the following: cutting, welding, Thermit welding, brazing, soldering, grinding, thermal spraying, thawing pipe, installation of torch-applied roof systems or any other similar activity.

SGC 14.3 APPLICATION FOR PROGRESS PAYMENT. Paragraph D.

D. The Value of Materials Stored at the site shall be an amount equal to 85%.

SGC 14.9 FINAL PAYMENT AND ACCEPTANCE. ***Add*** the following paragraph:

C. Prior to the final payment the CONTRACTOR shall contact the Alaska Department of Labor and Workforce Development (ADOL) and provide the OWNER with clearance from the ADOL for the CONTRACTOR and all Subcontractors that have worked on the Project. This clearance shall indicate that all Employment Security Taxes have been paid. A sample form for this purpose is at the end of this section. The CONTRACTOR shall also submit a "NOTICE OF COMPLETION OF PUBLIC WORKS" signed by ADOL.

SGC 16.8 CERTIFIED PAYROLLS. ***Change*** paragraph A. to read:

A. All CONTRACTORs or Subcontractors who perform work on a public construction contract for the OWNER shall file a certified payroll with Alaska Department of Labor. See Section 00830 - Alaska Labor Standards, Reporting, and Prevailing Wage Rate Determination.

Add the following SGC 16.12.

SGC 16.12 EQUAL EMPLOYMENT OPPORTUNITY (EEO)

The CONTRACTOR may not discriminate against any employee or applicant for employment because of race, religion, color, national origin, age, disability, sex, sexual orientation, gender identity, gender

expression, marital status, changes in marital status, pregnancy or parenthood. The CONTRACTOR shall post a notice setting out the provisions of this paragraph in a conspicuous place available to employees and applicants for employment.

The CONTRACTOR and each Subcontractor shall state in all solicitations and advertisements for employees to work on this Project, that it is an Equal Opportunity Employer and that all qualified applicants will receive consideration for employment without regard to race, religion, color, national origin, age, disability, sex, sexual orientation, gender identity, gender expression, marital status, changes in marital status, pregnancy or parenthood.

The CONTRACTOR shall include the provisions of this EEO article in every contract relating to this Project and shall require the inclusion of these provisions in every agreement entered into for this Project, so that those provisions will be binding upon the CONTRACTOR and each Subcontractor.

Add the following SGC 17**:**

SGC 17 GENERAL INFORMATION. This Project is currently funded by the City and Borough of Juneau, Alaska .

THE STATE of ALASKA
GOVERNOR MICHAEL J. DUNLEAVY

Department of Labor and Workforce Development

Division of Employment and Training Services
Employment Security Tax

P.O. Box 115509
Juneau, AK 99811-5509
Relay Alaska (in state): (800) 770-8973 or 7.1.1
Relay Alaska (out of state): (800) 770-8255
Toll free: (888) 448-2937
Phone: (907) 465-2787
Fax: (907) 465-2374

Tax Clearance Request Form for Contractors

Date of request: _____

Business name of the contractor a Tax Clearance is being requested for: _____

_____

Business address: _____

Business contact phone number: _____

Federal Identification Number: _____

Alaska Employer Account Number: _____

Specific time period a tax clearance is being requested for *(i.e. beginning and ending date of a subcontract agreement)*:

_____

Subcontract project name: _____

_____

Name and address of the person this Tax Clearance is to be returned to: _____

_____

Comments or additional information: _____

_____

For agency use only:

☐ Tax Clearance is granted

☐ Tax Clearance is not granted *(please have employer contact the department)*

☐ No account on file, liability unknown *(please have employer contact the department)*

☐ Employer has stated no employees, Tax Clearance not required.

Agency representative signature: _____ Date:_____

Agency representative title: _____

We are an equal opportunity employer/program. Auxiliary aids and services are available upon request to individuals with disabilities. labor.alaska.gov/estax

SECTION 00830 - ALASKA LABOR STANDARDS, REPORTING, AND PREVAILING WAGE RATE DETERMINATION

State of Alaska, Department of Labor, Laborers' and Mechanics' Minimum Rates of Pay, AS 36.05.010 and AS 36.05.050, Wage and Hour Administration Pamphlet No. 600, the latest edition published by the State of Alaska, Department of Labor inclusive, is provided in its entirety in SECTION 00830 – APPENDIX A.

The rates that are in effect 10 days prior to the final date for submission of bids are the rates that will apply to this project. These rates will apply for 24 calendar months from the date the project is awarded to a prime contractor. At the end of the initial 24-month period, the latest wage rates issued by the Alaska Department of Labor shall become effective for the next 24-month period. This process repeats itself until the project is completed.

The CONTRACTOR is responsible for contacting the Alaska Department of Labor to determine compliance with current regulations.

Correspondence regarding Title 36 requirements may be submitted to ADOL electronically or paper copies can be submitted by mail. To submit Title 36 documents and certified payrolls electronically, go to https://myalaska.state.ak.us/home/app.

The CONTRACTOR and each Subcontractor shall submit Certified Payrolls to the CBJ Contract Administrator upon request. If the requested Certified Payrolls are not received by the Contract Administrator within five (5) working days, the Contract Administrator will request the Certified Payrolls from ADOL. The CONTRACTOR shall be responsible for all costs charged by ADOL for delivery of the requested Certified Payrolls, including those costs for Subcontractors.

Within 10 Days of "Notice of Award/Notice to Proceed" make a list of **all** Subcontractors. Include their name, address, phone, estimated subcontract amount, and estimated start and finish dates. Send this list to the Wage and Hour Section (contact information below).

Certified Payrolls must be submitted every two weeks. Before the second Friday, each CONTRACTOR and Subcontractor must file Certified Payrolls with Statements of Compliance for the previous two weeks. Indicate ***"Start"*** on your first payroll, and ***"Final"*** on your last payroll for this Project.

As part of the **final payment request package,** CONTRACTOR must submit a "NOTICE OF COMPLETION OF PUBLIC WORKS" form signed by ADOL personnel.

Contact Information:

Wage and Hour Section
State of Alaska
Department of Labor and Workforce Development
Labor Standards and Safety Division
Wage and Hour Administration
P.O. Box 11149
Juneau, AK 99811-1149
907-465-4842
http://labor.state.ak.us/lss/home.htm

and

Caleb Comas, Contract Administrator
City and Borough of Juneau
155 S. Seward Street
Juneau, AK 99801
(907) 586-0800 ext. 4196
caleb.comas@juneau.org

SECTION 00830

APPENDIX A

Laborers' & Mechanics'
Minimum Rates of Pay

Pamphlet 600

Effective September 1, 2021

Laborers' and Mechanics' MINIMUM RATES OF PAY

Effective September 1, 2021 Issue 43

PAMPHLET No. 600

Title 36. Public Contracts
AS 36.05



DEPARTMENT OF LABOR
AND WORKFORCE DEVELOPMENT
Wage and Hour

- This page intentionally left blank -

THE STATE of ALASKA
GOVERNOR MIKE DUNLEAVY

Department of Labor and Workforce Development

Office of the Commissioner

Post Office Box 111149
Juneau, Alaska 99811
Main: 907.465.2700
fax: 907.465-2784

September 1, 2021

TO ALL CONTRACTING AGENCIES:

At the Alaska Department of Labor and Workforce Development, our goal is putting Alaskans to work. This pamphlet is designed to help contractors awarded public construction contracts understand the most significant laws of the State of Alaska pertaining to prevailing wage.

This pamphlet identifies current prevailing wage rates for public construction contracts (any construction projects awarded for the State of Alaska or its political subdivisions, such as local governments and certain non-profit organizations). Because these rates may change in a subsequent determination, please be sure you are using the appropriate rates. The rates published in this edition become effective September 1, 2021.

The prevailing wage rates contained in this pamphlet are applicable to public construction projects with a final bid date of September 11, 2021, or later. As the law now provides, these rates will remain stable during the life of a contract or for 24 calendar months, whichever is shorter. **The 24-month period begins on the date the prime contract is awarded.** Upon expiration of the initial 24-month period, the latest wage rates issued by the department shall become effective for a subsequent 24-month period or until the original contract is completed, whichever occurs first. This process shall be repeated until the original contract is completed.

The term "original contract" means the signed contract that resulted from the original bid and any amendments, including changes of work scope, additions, extensions, change orders, and other instruments agreed to by the parties that have not been subject to subsequent open bid procedures.

If a higher federal rate is required due to partial federal funding or other federal participation, the higher rate must be paid.

For additional copies of this pamphlet go to: http://labor.state.ak.us/lss/pamp600.htm

For questions regarding prevailing wage or employment preference requirements, please contact the nearest Wage and Hour office. These offices are listed on Page x.

Sincerely,

Tamika L. Ledbetter

Dr. Tamika L. Ledbetter
Commissioner

- This page intentionally left blank -

Table of Contents

Excerpts from Alaska Law

Sec. 36.05.005. Applicability.... ….iv
Sec. 36.05.010. Wage rates on public construction. iv
Sec. 36.05.040. Filing schedule of employees, wages paid and other information iv
Sec. 36.05.045. Notice of work and completion; withholding of payment iv
Sec. 36.05.060. Penalty for violation of this chapter v
Sec. 36.05.070. Wage rates in specifications and contracts for public works v
Sec. 36.05.080. Failure to pay agreed wages v
Sec. 36.05.090. Payment of wages from withheld payments and listing contractors who violate contracts v
Sec. 36.05.900. Definition.. vi

Excerpts from Alaska Administrative Code

8 AAC 30.051. Purpose vi
8 AAC 30.052. Board and lodging; remote sites vi
8 AAC 30.054. Per diem instead of board and lodging vi
8 AAC 30.056. Alternative arrangement.... vii
8 AAC 30.900. General definitions (selected excerpts).... vii

Additional Information

Per Diem vii
Laborer Classification Clarification.... viii
Apprentice Rates.... viii
Fringe Benefit Plans.... viii
Special Prevailing Wage Rate Determination.... ix
Alaska Employment Preference Information.... ix
Labor Standards and Safety Notice Requests x
Debarment List x

Wage Rates .... Pages 1-26

Note to Readers: The statutes and administrative regulations listed in this publication were taken from the official codes, as of the effective date of the publication. However, there may be errors or omissions that have not been identified and changes that occurred after the publication was printed. This publication is intended as an informational guide only and is not intended to serve as a precise statement of the statutes and regulations of the State of Alaska. To be certain of current laws and regulations, please refer to the official codes.

EXCERPTS FROM ALASKA LAW

Sec. 36.05.005. Applicability.
This chapter applies only to a public construction contract that exceeds $25,000.

Sec. 36.05.010. Wage rates on public construction.
A contractor or subcontractor who performs work on a public construction contract in the state shall pay not less than the current prevailing rate of wages for work of a similar nature in the region in which the work is done. The current prevailing rate of wages is that contained in the latest determination of prevailing rate of wages issued by the Department of Labor and Workforce Development at least 10 days before the final date for submission of bids for the contract. The rate shall remain in effect for the life of the contract or for 24 calendar months, whichever is shorter. At the end of the initial 24-month period, if new wage determinations have been issued by the department, the latest wage determination shall become effective for the next 24-month period or until the contract is completed, whichever occurs first. This process shall be repeated until the contract is completed.

Sec. 36.05.040. Filing schedule of employees, wages paid, and other information.
All contractors or subcontractors who perform work on a public construction contract for the state or for a political subdivision of the state shall, before the Friday of every second week, file with the Department of Labor and Workforce Development a sworn affidavit for the previous reporting period, setting out in detail the number of persons employed, wages paid, job classification of each employee, hours worked each day and week, and other information on a form provided by the Department of Labor and Workforce Development.

Sec. 36.05.045. Notice of work and completion; withholding of payment.

(a) Before commencing work on a public construction contract, the person entering into the contract with a contracting agency shall designate a primary contractor for purposes of this section. Before work commences, the primary contractor shall file a notice of work with the Department of Labor and Workforce Development. The notice of work must list work to be performed under the public construction contract by each contractor who will perform any portion of work on the contract and the contract price being paid to each contractor. The primary contractor shall pay all filing fees for each contractor performing work on the contract, including a filing fee based on the contract price being paid for work performed by the primary contractor's employees. The filing fee payable shall be the sum of all fees calculated for each contractor. The filing fee shall be one percent of each contractor's contract price. The total filing fee payable by the primary contractor under this subsection may not exceed $5,000. In this subsection, "contractor" means an employer who is using employees to perform work on the public construction contract under the contract or a subcontract.

(b) Upon completion of all work on the public construction contract, the primary contractor shall file with the Department of Labor and Workforce Development a notice of completion together with payment of any additional filing fees owed due to increased contract amounts. Within 30 days after the department's receipt of the primary contractor's notice of completion, the department shall inform the contracting agency of the amount, if any, to be withheld from the final payment.

(c) A contracting agency

(1) may release final payment of a public construction contract to the extent that the agency has received verification from the Department of Labor and Workforce Development that

(A) the primary contractor has complied with (a) and (b) of this section;

(B) the Department of Labor and Workforce Development is not conducting an investigation under this title; and

(C) the Department of Labor and Workforce Development has not issued a notice of a violation of this chapter to the primary contractor or any other contractors working on the public construction contract; and

(2) shall withhold from the final payment an amount sufficient to pay the department's estimate of what may be needed to compensate the employees of any contractors under investigation on this construction contract, and any unpaid filing fees.

(d) The notice and filing fee required under (a) of this section may be filed after work has begun if
   (1) The public construction contract is for work undertaken in immediate response to an emergency; and
   (2) The notice and fees are filed not later than 14 days after the work has begun.

(e) A false statement made on a notice required by this section is punishable under AS 11.56.210.

Sec. 36.05.060. Penalty for violation of this chapter.

A contractor who violates this chapter is guilty of a misdemeanor and upon conviction is punishable by a fine of not less than $100 nor more than $1,000, or by imprisonment for not less than 10 days nor more than 90 days, or by both. Each day a violation exists constitutes a separate offense.

Sec. 36.05.070. Wage rates in specifications and contracts for public works.

(a) The advertised specifications for a public construction contract that requires or involves the employment of mechanics, laborers, or field surveyors must contain a provision stating the minimum wages to be paid various classes of laborers, mechanics, or field surveyors and that the rate of wages shall be adjusted to the wage rate under AS 36.05.010.

(b) Repealed by §17 ch 142 SLA 1972.

(c) A public construction contract under (a) of this section must contain provisions that
   (1) the contractor or subcontractors of the contractor shall pay all employees unconditionally and not less than once a week;
   (2) wages may not be less than those stated in the advertised specifications, regardless of the contractual relationship between the contractor or subcontractors and laborers, mechanics, or field surveyors;
   (3) the scale of wages to be paid shall be posted by the contractor in a prominent and easily accessible place at the site of the work;
   (4) the state or a political subdivision shall withhold so much of the accrued payments as is necessary to pay to laborers, mechanics, or field surveyors employed by the contractor or subcontractors the difference between
      (A) the rates of wages required by the contract to be paid laborers, mechanics, or field surveyors on the work; and
      (B) the rates of wages in fact received by laborers, mechanics, or field surveyors.

Sec. 36.05.080. Failure to pay agreed wages.

Every contract within the scope of AS 36.05.070 shall contain a provision that if it is found that a laborer, mechanic, or field surveyor employed by the contractor or subcontractor has been or is being paid a rate of wages less than the rate of wages required by the contract to be paid, the state or its political subdivision may, by written notice to the contractor, terminate the contractor's right to proceed with the work or the part of the work for which there is a failure to pay the required wages and to prosecute the work to completion by contract or otherwise, and the contractor and the contractor's sureties are liable to the state or its political subdivision for excess costs for completing the work.

Sec. 36.05.090. Payment of wages from withheld payments and listing contractors who violate contracts.

(a) The state disbursing officer in the case of a state public construction contract and the local fiscal officer in the case of a political subdivision public construction contract shall pay directly to laborers, mechanics, or field surveyors from accrued payments withheld under the terms of the contract the wages due laborers, mechanics, or field surveyors under AS 36.05.070.

(b) The state disbursing officer or the local fiscal officer shall distribute to all departments of the state government and to all political subdivisions of the state a list giving the names of persons who have disregarded their obligations to employees. A person appearing on this list and a firm, corporation, partnership, or association in which the person has an interest may not work as a contractor or

subcontractor on a public construction contract for the state or a political subdivision of the state until three years after the date of publication of the list. If the accrued payments withheld under the contract are insufficient to reimburse all the laborers, mechanics, or field surveyors with respect to whom there has been a failure to pay the wages required under AS 36.05.070, the laborers, mechanics, or field surveyors have the right of action or intervention or both against the contractor and the contractor's sureties conferred by law upon persons furnishing labor or materials, and in the proceedings it is not a defense that the laborers, mechanics, or field surveyors accepted or agreed to accept less than the required rate of wages or voluntarily made refunds.

Sec. 36.05.900. Definition.
In this chapter, "contracting agency" means the state or a political subdivision of the state that has entered into a public construction contract with a contractor.

EXCERPTS FROM ALASKA ADMINISTRATIVE CODE

Notice:** Regulations relating to board and lodging and per diem went into effect on November 25, 2018. The new regulations are excerpted here

8 AAC 30.051. Purpose. The purpose of 8 AAC 30.052 – 8 AAC 30.056 is to ensure that wages paid to laborers, mechanics, and field surveyors do not fall below the prevailing rate of pay.

8 AAC 30.052. Board and lodging; remote sites. (a) A contractor on a public construction project located 65 or more road miles from the international airport closest to the project area in either Fairbanks, Juneau, or Anchorage, or that is inaccessible by road in a two-wheel drive vehicle, shall provide adequate board and lodging to each laborer, mechanic, or field surveyor while the person is employed on the project. If commercial lodging facilities are not available, the contractor shall provide temporary lodging facilities. Lodging facilities must comply with all applicable state and federal laws. For a highway project, the location of the project is measured from the midpoint of the project.

(b) A contractor is not required to provide board and lodging:

(1) to a laborer, mechanic, or field surveyor who is a domiciled resident of the project area; or

(2) on a laborer, mechanic, or field surveyor's scheduled days off, when the person can reasonably travel between the project and the person's permanent residence; for the purposes of this paragraph, "scheduled day off" means a day in which a person does not perform work on-site, is not required to remain at or near the job location for the benefit of the contractor, and is informed of the day off at least seven days before the day off.

(c) Upon a contractor's written request, the commissioner may waive the requirements of (a) of this section where:

(1) the project is inaccessible by road in a two-wheel drive vehicle, but the laborer, mechanic, or field surveyor can reasonably travel between the project and the person's permanent residence within one hour; or

(2) a laborer, mechanic, or field surveyor is not a domiciled resident of the project area, but has established permanent residence, with the intent to remain indefinitely, within 65 road miles of the project, or for a highway project, the mid-point of the project.

8 AAC 30.054. Per diem instead of board and lodging. (a) A contractor may pay a laborer, mechanic, or field surveyor per diem instead of providing board and lodging, when the following conditions are met:

(1) the department determines that per diem instead of board and lodging is an established practice for the work classification; the department shall publish and periodically revise its determinations in the pamphlet *Laborers' and Mechanics' Minimum Rates of Pay*;

(2) the contractor pays each laborer, mechanic, or field surveyor the appropriate per diem rate as published and periodically revised in the pamphlet *Laborers' and Mechanics' Minimum Rates of Pay*; and

(3) the contractor pays the per diem to each laborer, mechanic, or field surveyor on the same day that wages are paid.

(b) A contractor may not pay per diem instead of board and lodging on a highway project located

(1) west of Livengood on the Elliot Highway, AK-2;

(2) on the Dalton Highway, AK-11;

(3) north of milepost 20 on the Taylor Highway, AK-5;

(4) east of Chicken on the Top of the World Highway; or

(5) south of Tetlin Junction to the Alaska-Canada border on the Alaska Highway, AK-2.

8 AAC 30.056. Alternative arrangement. Upon a contractor's written request, the commissioner may approve an alternative board and lodging or per diem arrangement, provided

(1) the arrangement does not reduce the laborer, mechanic, or field surveyor's wages below the prevailing wage rate; and

(2) the laborer, mechanic, or field surveyor voluntarily enters into and signs the written arrangement; a labor organization representing laborers, mechanics, or field surveyors may enter into the written agreement on their behalf.

8 AAC 30.900. General definitions (selected excerpts only):

In this chapter and in AS 36

(22) "domiciled resident" means a person living within 65 road miles of a public construction project, or in the case of a highway project, the mid-point of the project, for at least 12 consecutive months prior to the award of the public construction project;

(23) "employed on the project" means the time period from the date the laborer, mechanic, or field surveyor first reports on-site to the project through the final date the person reports on-site to the project.

ADDITIONAL INFORMATION

PER DIEM

Notice: New regulations relating to board and lodging and per diem went into effect on November 25, 2018. The regulations provide a comprehensive set of requirements for the provision of board and lodging or per diem for workers on remote projects. Please refer to Alaska Administrative Code 8 AAC Chapter 30 and read the chapter carefully.

The Alaska Department of Labor and Workforce Development has determined that per diem is an established work practice for certain work classifications. These classifications are indicated throughout the Pamphlet by an asterisk (*) under the classification title. If all of the conditions of 8 AAC 30.054 are met, an employer may pay workers in these classifications per diem instead of providing board and lodging on a remote project.

Per Diem Rate: As of May 1st, 2019, the minimum per diem rate is $100.00 per day, or part thereof, the worker is employed on the project. In the event that a contractor provides lodging facilities, but no meals, the department will accept a payment of $48 per day for meals to meet the per diem requirements.

LABORER CLASSIFICATION CLARIFICATION

The laborer rates categorized in class code S1201-S1206 apply in one area of Alaska; the area that is south of N63 latitude and west of W138 Longitude. The laborer rates categorized in class code N1201-N1206 apply in two areas of Alaska; the Alaska areas north of N63 latitude and east of W138 longitude. The following graphic representations should assist with clarifying the applicable wage rate categories:

S1201-
S1206

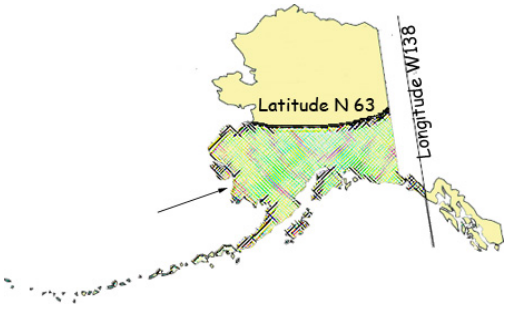

N1201-
N1206

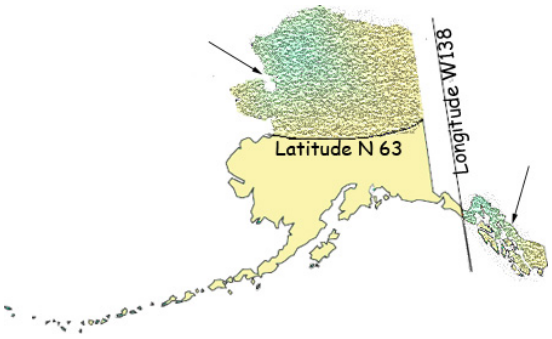

APPRENTICE RATES

Apprentice rates at less than the minimum prevailing rates may be paid to apprentices according to an apprentice program which has been registered and approved by the Commissioner of the Alaska Department of Labor and Workforce Development in writing or according to a bona fide apprenticeship program registered with the U.S. Department of Labor, Office of Apprenticeship Training. **Any employee listed on a payroll at an apprentice wage rate who is not registered as above shall be paid the journeyman prevailing minimum wage in that work classification.** Wage rates are based on prevailing crew makeup practices in Alaska and apply to work performed regardless of either the quality of the work performed by the employee or the titles or classifications which may be assigned to individual employees.

FRINGE BENEFIT PLANS

Contractors/subcontractors may compensate fringe benefits to their employees in any one of three methods. The fringe benefits may be paid into a union trust fund, into an approved benefit plan, or paid directly on the paycheck as gross wages.

Where fringe benefits are paid into approved plans, funds, or programs including union trust funds, the payments must be contributed at least monthly. If contractors submit their own payroll forms and are paying fringe benefits into approved plans, funds, or programs, the employer's certification must include, in addition to those requirements of 8 AAC 30.020(c), a statement that fringe benefit payments have been or will be paid at least monthly. Contractors who pay fringe benefits to a plan must ensure the plan is one approved by the Internal Revenue Service and that the plan meets the requirements of 8 AAC 30.025 (eff. 3/2/08) in order for payments to be credited toward the prevailing wage obligation.

SPECIAL PREVAILING WAGE RATE DETERMINATION

Special prevailing wage rate determinations may be requested for special projects or a special worker classification if the work to be performed does not conform to traditional public construction for which a prevailing wage rate has been established under 8 AAC 30.050(a) of this section. Requests for special wage rate determinations must be in writing and filed with the Commissioner at least 30 days before the award of the contract. An applicant for a special wage rate determination shall have the responsibility to support the necessity for the special rate. An application for a special wage rate determination filed under this section must contain:

(1) a specification of the contract or project on which the special rates will apply and a description of the work to be performed;
(2) a brief narrative explaining why special wage rates are necessary;
(3) the job class or classes involved;
(4) the special wage rates the applicant is requesting, including survey or other relevant wage data to support the requested rates;
(5) the approximate number of employees who would be affected; and
(6) any other information which might be helpful in determining if special wage rates are appropriate.

Requests made pursuant to the above should be addressed to:

Director
Alaska Department of Labor and Workforce Development
Labor Standards and Safety Division
Wage and Hour
P.O. Box 111149
Juneau, AK 99811-1149
-or-
Email: statewide.wagehour@alaska.gov

EMPLOYMENT PREFERENCE INFORMATION

In October 2019, the Alaska Attorney General issued a formal opinion stating that the Alaska Statutes 36.10.150 of the State's 90% Employment Preference law, also known as the Alaska Resident Hire law, violates both the U.S. and Alaska Constitutions. As a result, the state has stopped all enforcement activity.
A copy of the Attorney General opinion is found here:

http://law.alaska.gov/pdf/opinions/opinions_2019/19-005_AK-hire.pdf

Alaska Department of Labor and Workforce Development
Labor Standards and Safety Division
Wage and Hour
Web site: http://labor.state.ak.us/lss/pamp600.htm

Anchorage	Juneau	Fairbanks
1251 Muldoon Road, Suite 113 Anchorage, Alaska 99504-2098 Phone: (907) 269-4900 Email: statewide.wagehour@alaska.gov	PO Box 111149 Juneau, Alaska 99811 Phone: (907) 465-4842 Email: statewide.wagehour@alaska.gov	Regional State Office Building 675 7th Ave., Station J-1 Fairbanks, Alaska 99701-4593 Phone: (907) 451-2886 Email: statewide.wagehour@alaska.gov

LABOR STANDARDS AND SAFETY NOTICE REQUESTS

If you would like to receive Wage and Hour or Mechanical Inspection **regulation notices** or **publications information**, they are available via electronic mail, by signing up in the GovDelivery System, https://public.govdelivery.com/accounts/AKDOL/subscriber/new and selecting topics *LSS – Wage and Hour – Forms and Publications*, *LSS – Mechanical Inspection Regulations*, or *LSS – Wage and Hour Regulations*.

Publications are also available online at http://labor.alaska.gov/lss/home.htm

DEBARMENT LIST

AS 36.05.090(b) states that "the state disbursing officer or the local fiscal officer shall distribute to all departments of the state government and to all political subdivisions of the state a list giving the names of persons who have disregarded their obligations to employees."

A person appearing on the following debarment list and a firm, corporation, partnership, or association in which the person has an interest may not work as a contractor or subcontractor on a public construction contract for the state or a political subdivision of the state for three years from the date of debarment.

Company Name	Debarment Expires

No companies are currently debarred.

Laborers' & Mechanics' Minimum Rates of Pay

Class Code	Classification of Laborers & Mechanics	BHR	H&W	PEN	TRN	Other Benefits		THR
Boilermakers								
	*See per diem note on last page							
						VAC	**SAF**	
A0101	Boilermaker (journeyman)	47.03	8.57	17.02	1.90	3.50	0.34	78.36
Bricklayers & Blocklayers								
	*See per diem note on last page							
						L&M		
A0201	Blocklayer	42.16	9.00	10.05	0.62	0.20		62.03
	Bricklayer Marble or Stone Mason Refractory Worker (Firebrick, Plastic, Castable, and Gunite Refractory Applications) Terrazzo Worker Tile Setter							
						L&M		
A0202	Tuck Pointer Caulker	42.16	9.00	10.05	0.62	0.20		62.03
	Cleaner (PCC)							
						L&M		
A0203	Marble & Tile Finisher	35.99	9.00	10.05	0.62	0.20		55.86
	Terrazzo Finisher							
						L&M		
A0204	Torginal Applicator	40.10	9.83	8.50	0.55	0.15	0.87	60.00
Carpenters, Region I (North of 63 latitude)								
	*See per diem note on last page							
						L&M	**SAF**	
N0301	Carpenter (journeyman)	42.34	10.08	15.23	1.75	0.20	0.20	69.80
	Lather/Drywall/Acoustical							
Carpenters, Region II (South of N63 latitude)								
	*See per diem note on last page							
						L&M	**SAF**	
S0301	Carpenter (journeyman)	42.34	10.08	15.77	1.75	0.20	0.20	70.34
	Lather/Drywall/Acoustical							
Cement Masons								
	*See per diem note on last page							

Wage benefits key: BHR=basic hourly rate; H&W=health and welfare; IAF=industry advancement fund; LEG=legal fund; L&M=labor/management fund; PEN=pension fund; SAF=safety; SUI=supplemental unemployment insurance; S&L=SUI & LEG combined; TRN=training; THR=total hourly rate; VAC=vacation

Class Code	Classification of Laborers & Mechanics	BHR	H&W	PEN	TRN	Other Benefits	THR
Cement Masons							
	*See per diem note on last page						
						L&M	
A0401	Group I, including:	39.38	8.70	11.80	1.43	0.10	61.41
	Application of Sealing Compound						
	Application of Underlayment						
	Building, General						
	Cement Finisher						
	Cement Mason (journeyman)						
	Concrete						
	Concrete Paving						
	Concrete Polishing						
	Concrete Repair						
	Curb & Gutter, Sidewalk						
	Curing of All Concrete						
	General Concrete Pour Tender						
	Grouting & Caulking of Tilt-Up Panels						
	Grouting of All Plates						
	Patching Concrete						
	Screed Pin Setter						
	Screeder or Rodder						
	Spackling/Skim Coating						
						L&M	
A0402	Group II, including:	39.38	8.70	11.80	1.43	0.10	61.41
	Form Setter						
						L&M	
A0403	Group III, including:	39.38	8.70	11.80	1.43	0.10	61.41
	Concrete Saw Cutter Operator (All Control Joints and Self-powered)						
	Curb & Gutter Machine						
	Floor Grinder						
	Pneumatic Power Tools						
	Power Chipping & Bushing						
	Sand Blasting Architectural Finish						
	Screed & Rodding Machine Operator						
	Troweling Machine Operator (all concrete surfaces)						
						L&M	
A0404	Group IV, including:	39.38	8.70	11.80	1.43	0.10	61.41
	Acoustical or Imitation Acoustical Finish						
	Application of All Composition Mastic						
	Application of All Epoxy Material						
	Application of All Plastic Material						
	Finish Colored Concrete						
	Gunite Nozzleman						
	Hand Powered Grinder						

Class Code	Classification of Laborers & Mechanics	BHR	H&W	PEN	TRN	Other Benefits		THR
Cement Masons								
	*See per diem note on last page							
A0404	Group IV, including:	39.38	8.70	11.80	1.43	**L&M** 0.10		61.41
	Preparing, scratching and browsing of all ceilings and walls, finished with terrazo or tile							
	Tunnel Worker							
A0405	Group V, including:	39.38	8.70	11.80	1.43	**L&M** 0.10		61.41
	Casting and finishing							
	EIFS Systems							
	Finishing of all interior and exterior plastering							
	Fireproofing (Pryocrete, Cafco, Albi-Clad, sprayed fiberglass)							
	Gypsum, Portland Cement							
	Kindred material and products							
	Operation and control of all types of plastering machines, including power tools and floats, used by the industry							
	Overcoating and maintenance of interior/exterior plaster surfaces							
	Plasterer							
	Veneer plastering process (Rapid Plaster, U.S.G. "Imperial Systems", and Pabcoat Systems")							
	Venetian plaster and color-integrated Italian/Middle-Eastern line plaster							
Culinary Workers								
A0501	Baker/Cook	28.37	7.31	7.56		**LEG**		43.24
A0503	General Helper	25.07	7.31	7.56		**LEG**		39.94
	Housekeeper							
	Janitor							
	Kitchen Helper							
A0504	Head Cook	28.97	7.31	7.56		**LEG**		43.84
A0505	Head Housekeeper	25.45	7.31	7.56		**LEG**		40.32
	Head Kitchen Help							
Dredgemen								
	*See per diem note on last page							
A0601	Assistant Engineer	41.76	10.70	13.50	1.00	**L&M** 0.10	0.05	67.11
	Craneman							

Class Code	Classification of Laborers & Mechanics	BHR	H&W	PEN	TRN	Other Benefits		THR
Dredgemen								
	*See per diem note on last page							
A0601	Assistant Engineer	41.76	10.70	13.50	1.00	**L&M** 0.10	0.05	67.11
	Electrical Generator Operator (primary pump/power barge/dredge)							
	Engineer							
	Welder							
A0602	Assistant Mate (deckhand)	40.60	10.70	13.50	1.00	**L&M** 0.10	0.05	65.95
A0603	Fireman	41.04	10.70	13.50	1.00	**L&M** 0.10	0.05	66.39
A0605	Leverman Clamshell	44.29	10.70	13.50	1.00	**L&M** 0.10	0.05	69.64
A0606	Leverman Hydraulic	42.53	10.70	13.50	1.00	**L&M** 0.10	0.05	67.88
A0607	Mate & Boatman	41.76	10.70	13.50	1.00	**L&M** 0.10	0.05	67.11
A0608	Oiler (dredge)	41.04	10.70	13.50	1.00	**L&M** 0.10	0.05	66.39
Electricians								
	*See per diem note on last page							
A0701	Inside Cable Splicer	42.02	14.05	13.90	0.95	**L&M** 0.20	**LEG** 0.15	71.27
A0702	Inside Journeyman Wireman, including:	41.69	14.05	14.14	0.95	**L&M** 0.20	**LEG** 0.15	71.18
	Technicians (including use of drones in electrical construction)							
A0703	Power Cable Splicer	60.79	14.05	19.01	0.95	**L&M** 0.25	**LEG** 0.15	95.20
A0704	Tele Com Cable Splicer	50.53	14.05	16.67	0.95	**L&M** 0.20	**LEG** 0.15	82.55
A0705	Power Journeyman Lineman, including:	59.04	14.05	18.96	0.95	**L&M** 0.25	**LEG** 0.15	93.40
	Power Equipment Operator							
	Technician (including use of drones in electrical construction)							
A0706	Tele Com Journeyman Lineman, including:	48.78	14.05	16.61	0.95	**L&M** 0.20	**LEG** 0.15	80.74
	Technician (including use of drones in telecommunications construction)							
	Tele Com Equipment Operator							

Class Code	Classification of Laborers & Mechanics	BHR	H&W	PEN	TRN	Other Benefits		THR
Electricians								
	*See per diem note on last page							
						L&M	**LEG**	
A0707	Straight Line Installer - Repairman	48.78	14.05	16.61	0.95	0.20	0.15	80.74
						L&M	**LEG**	
A0708	Powderman	57.04	14.05	18.90	0.95	0.25	0.15	91.34
						L&M	**LEG**	
A0710	Material Handler	26.57	13.76	5.30	0.15	0.15	0.15	46.08
						L&M	**LEG**	
A0712	Tree Trimmer Groundman	28.37	14.05	12.59	0.15	0.15	0.15	55.46
						L&M	**LEG**	
A0713	Journeyman Tree Trimmer	37.30	14.05	12.86	0.15	0.15	0.15	64.66
						L&M	**LEG**	
A0714	Vegetation Control Sprayer	40.85	14.05	12.97	0.15	0.15	0.15	68.32
						L&M	**LEG**	
A0715	Inside Journeyman Communications CO/PBX	40.27	14.05	13.85	0.95	0.20	0.15	69.47
Elevator Workers								
	*See per diem note on last page							
						L&M	**VAC**	
A0802	Elevator Constructor	42.76	15.88	19.31	0.64	0.54	4.74	83.87
						L&M	**VAC**	
A0803	Elevator Constructor Mechanic	61.08	15.88	19.31	0.64	0.54	6.78	104.23
Heat & Frost Insulators/Asbestos Workers								
	*See per diem note on last page							
						IAF	**LML**	
A0902	Asbestos Abatement-Mechanical Systems	38.68	9.24	11.12	1.20	0.14	0.05	60.43
						IAF	**LML**	
A0903	Asbestos Abatement/General Demolition All Systems	38.68	9.24	11.12	1.20	0.14	0.05	60.43
						IAF	**LML**	
A0904	Insulator, Group II	38.68	9.24	11.12	1.20	0.14	0.05	60.43
						IAF	**LML**	
A0905	Fire Stop	38.68	9.24	11.12	1.20	0.14	0.05	60.43
IronWorkers								
	*See per diem note on last page							
						L&M	**IAF**	
A1101	Ironworkers, including:	40.82	9.51	24.28	0.76	0.20	0.24	75.81

Wage benefits key: BHR=basic hourly rate; H&W=health and welfare; IAF=industry advancement fund; LEG=legal fund; L&M=labor/management fund; PEN=pension fund; SAF=safety; SUI=supplemental unemployment insurance; S&L=SUI & LEG combined; TRN=training; THR=total hourly rate; VAC=vacation

Class Code	Classification of Laborers & Mechanics	BHR	H&W	PEN	TRN	Other Benefits		THR
IronWorkers								
	*See per diem note on last page							
						L&M	**IAF**	
A1101	Ironworkers, including:	40.82	9.51	24.28	0.76	0.20	0.24	75.81
	Bender Operators							
	Bridge & Structural							
	Hangar Doors							
	Hollow Metal Doors							
	Industrial Doors							
	Machinery Mover							
	Ornamental							
	Reinforcing							
	Rigger							
	Sheeter							
	Signalman							
	Stage Rigger							
	Toxic Haz-Mat Work							
	Welder							
						L&M	**IAF**	
A1102	Helicopter	41.82	9.51	24.28	0.76	0.20	0.24	76.81
	Helicopter (used for rigging and setting)							
	Tower (energy producing windmill type towers to include nacelle and blades)							
						L&M	**IAF**	
A1103	Fence/Barrier Installer	37.32	9.51	24.28	0.76	0.20	0.24	72.31
						L&M	**IAF**	
A1104	Guard Rail Layout Man	38.06	9.51	24.28	0.76	0.20	0.24	73.05
						L&M	**IAF**	
A1105	Guard Rail Installer	38.32	9.51	24.28	0.76	0.20	0.24	73.31
Laborers (The Alaska areas north of N63 latitude and east of W138 longitude)								
	*See per diem note on last page							
						L&M	**LEG**	
N1201	Group I, including:	32.00	8.95	20.66	1.30	0.20	0.20	63.31
	Asphalt Worker (shovelman, plant crew)							
	Brush Cutter							
	Camp Maintenance Laborer							
	Carpenter Tender or Helper							
	Choke Setter, Hook Tender, Rigger, Signalman							
	Concrete Labor (curb & gutter, chute handler, curing, grouting, screeding)							
	Crusher Plant Laborer							
	Demolition Laborer							
	Ditch Digger							

Wage benefits key: BHR=basic hourly rate; H&W=health and welfare; IAF=industry advancement fund; LEG=legal fund; L&M=labor/management fund; PEN=pension fund; SAF=safety; SUI=supplemental unemployment insurance; S&L=SUI & LEG combined; TRN=training; THR=total hourly rate; VAC=vacation

Class Code	Classification of Laborers & Mechanics	BHR	H&W	PEN	TRN	Other Benefits		THR
						L&M	LEG	
N1201	Group I, including:	32.00	8.95	20.66	1.30	0.20	0.20	63.31

Laborers (The Alaska areas north of N63 latitude and east of W138 longitude)

*See per diem note on last page

Dumpman
Environmental Laborer (hazard/toxic waste, oil spill)
Fence Installer
Fire Watch Laborer
Flagman
Form Stripper
General Laborer
Guardrail Laborer, Bridge Rail Installer
Hydro-seeder Nozzleman
Laborer, Building
Landscaper or Planter
Laying of Mortarless Decorative Block (retaining walls, flowered decorative block 4 feet or less - highway or landscape work)
Material Handler
Pneumatic or Power Tools
Portable or Chemical Toilet Serviceman
Pump Man or Mixer Man
Railroad Track Laborer
Sandblast, Pot Tender
Saw Tender
Slurry Work
Steam Cleaner Operator
Steam Point or Water Jet Operator
Storm Water Pollution Protection Plan Worker (SWPPP Worker - erosion and sediment control Laborer)
Tank Cleaning
Utiliwalk & Utilidor Laborer
Watchman (construction projects)
Window Cleaner

						L&M	LEG	
N1202	Group II, including:	33.00	8.95	20.66	1.30	0.20	0.20	64.31

Burning & Cutting Torch
Cement or Lime Dumper or Handler (sack or bulk)
Certified Erosion Sediment Control Lead (CESCL Laborer)
Choker Splicer
Chucktender (wagon, air-track & hydraulic drills)
Concrete Laborer (power buggy, concrete saws, pumpcrete nozzleman, vibratorman)
Culvert Pipe Laborer
Cured Inplace Pipelayer
Environmental Laborer (asbestos, marine work)

Class Code	Classification of Laborers & Mechanics	BHR	H&W	PEN	TRN	Other Benefits		THR
						L&M	LEG	
Laborers (The Alaska areas north of N63 latitude and east of W138 longitude)								
	*See per diem note on last page							
N1202	Group II, including:	33.00	8.95	20.66	1.30	0.20	0.20	64.31
	Floor Preparation, Core Drilling							
	Foam Gun or Foam Machine Operator							
	Green Cutter (dam work)							
	Gunite Operator							
	Hod Carrier							
	Jackhammer/Chipping Gun or Pavement Breaker							
	Laser Instrument Operator							
	Laying of Mortarless Decorative Block (retaining walls, flowered decorative block over 4 feet - highway or landscape work)							
	Mason Tender & Mud Mixer (sewer work)							
	Pilot Car							
	Pipelayer Helper							
	Plasterer, Bricklayer & Cement Finisher Tender							
	Powderman Helper							
	Power Saw Operator							
	Railroad Switch Layout Laborer							
	Sandblaster							
	Scaffold Building & Erecting							
	Sewer Caulker							
	Sewer Plant Maintenance Man							
	Thermal Plastic Applicator							
	Timber Faller, Chainsaw Operator, Filer							
	Timberman							
						L&M	LEG	
N1203	Group III, including:	33.90	8.95	20.66	1.30	0.20	0.20	65.21
	Bit Grinder							
	Camera/Tool/Video Operator							
	Guardrail Machine Operator							
	High Rigger & Tree Topper							
	High Scaler							
	Multiplate							
	Plastic Welding							
	Slurry Seal Squeegee Man							
	Traffic Control Supervisor							
	Welding Certified (in connection with laborer's work)							
						L&M	LEG	
N1204	Group IIIA	37.18	8.95	20.66	1.30	0.20	0.20	68.49
	Asphalt Raker, Asphalt Belly Dump Lay Down							
	Drill Doctor (in the field)							

Class Code	Classification of Laborers & Mechanics	BHR	H&W	PEN	TRN	Other Benefits		THR
						L&M	LEG	

Laborers (The Alaska areas north of N63 latitude and east of W138 longitude)

*See per diem note on last page

						L&M	LEG	
N1204	Group IIIA	37.18	8.95	20.66	1.30	0.20	0.20	68.49

Driller (including, but not limited to wagon drills, air-track drills, hydraulic drills)
Pioneer Drilling & Drilling Off Tugger (all type drills)
Pipelayers
Powderman (Employee Possessor)
Storm Water Pollution Protection Plan Specialist (SWPPP Specialist)
Traffic Control Supervisor, DOT Qualified

						L&M	LEG	
N1205	Group IV	21.57	8.95	20.66	1.30	0.20	0.20	52.88

Final Building Cleanup
Permanent Yard Worker

						L&M	LEG	
N1206	Group IIIB	40.97	6.24	20.66	1.30	0.20	0.20	69.57

Driller (including, but not limited to wagon drills, air-track drills, hydraulic drills)(over 5,000 hours)
Federal Powderman (Responsible Person in Charge)
Grade Checking (setting or transferring of grade marks, line and grade, GPS, drones)
Pioneer Drilling & Drilling Off Tugger (all type drills)(over 5,000 hours)
Stake Hopper

Laborers (The area that is south of N63 latitude and west of W138 longitude)

*See per diem note on last page

						L&M	LEG	
S1201	Group I, including:	32.00	8.95	20.66	1.30	0.20	0.20	63.31

Asphalt Worker (shovelman, plant crew)
Brush Cutter
Camp Maintenance Laborer
Carpenter Tender or Helper
Choke Setter, Hook Tender, Rigger, Signalman
Concrete Labor (curb & gutter, chute handler, curing, grouting, screeding)
Crusher Plant Laborer
Demolition Laborer
Ditch Digger
Dumpman
Environmental Laborer (hazard/toxic waste, oil spill)
Fence Installer
Fire Watch Laborer
Flagman
Form Stripper

Class Code	Classification of Laborers & Mechanics	BHR	H&W	PEN	TRN	Other Benefits		THR
						L&M	LEG	

Laborers (The area that is south of N63 latitude and west of W138 longitude)
*See per diem note on last page

S1201	Group I, including:	32.00	8.95	20.66	1.30	0.20	0.20	63.31

General Laborer
Guardrail Laborer, Bridge Rail Installer
Hydro-seeder Nozzleman
Laborer, Building
Landscaper or Planter
Laying of Mortarless Decorative Block (retaining walls, flowered decorative block 4 feet or less - highway or landscape work)
Material Handler
Pneumatic or Power Tools
Portable or Chemical Toilet Serviceman
Pump Man or Mixer Man
Railroad Track Laborer
Sandblast, Pot Tender
Saw Tender
Slurry Work
Steam Cleaner Operator
Steam Point or Water Jet Operator
Storm Water Pollution Protection Plan Worker (SWPPP Worker - erosion and sediment control Laborer)
Tank Cleaning
Utiliwalk & Utilidor Laborer
Watchman (construction projects)
Window Cleaner

						L&M	LEG	
S1202	Group II, including:	33.00	8.95	20.66	1.30	0.20	0.20	64.31

Burning & Cutting Torch
Cement or Lime Dumper or Handler (sack or bulk)
Certified Erosion Sediment Control Lead (CESCL Laborer)
Choker Splicer
Chucktender (wagon, air-track & hydraulic drills)
Concrete Laborer (power buggy, concrete saws, pumpcrete nozzleman, vibratorman)
Culvert Pipe Laborer
Cured Inplace Pipelayer
Environmental Laborer (asbestos, marine work)
Floor Preparation, Core Drilling
Foam Gun or Foam Machine Operator
Green Cutter (dam work)
Gunite Operator
Hod Carrier
Jackhammer/Chipping Gun or Pavement Breaker

Class Code	Classification of Laborers & Mechanics	BHR	H&W	PEN	TRN	Other Benefits		THR
						L&M	LEG	

Laborers (The area that is south of N63 latitude and west of W138 longitude)

*See per diem note on last page

						L&M	LEG	
S1202	Group II, including:	33.00	8.95	20.66	1.30	0.20	0.20	64.31

Laser Instrument Operator
Laying of Mortarless Decorative Block (retaining walls, flowered decorative block over 4 feet - highway or landscape work)
Mason Tender & Mud Mixer (sewer work)
Pilot Car
Pipelayer Helper
Plasterer, Bricklayer & Cement Finisher Tender
Powderman Helper
Power Saw Operator
Railroad Switch Layout Laborer
Sandblaster
Scaffold Building & Erecting
Sewer Caulker
Sewer Plant Maintenance Man
Thermal Plastic Applicator
Timber Faller, Chainsaw Operator, Filer
Timberman

						L&M	LEG	
S1203	Group III, including:	33.90	8.95	20.66	1.30	0.20	0.20	65.21

Bit Grinder
Camera/Tool/Video Operator
Guardrail Machine Operator
High Rigger & Tree Topper
High Scaler
Multiplate
Plastic Welding
Slurry Seal Squeegee Man
Traffic Control Supervisor
Welding Certified (in connection with laborer's work)

						L&M	LEG	
S1204	Group IIIA	37.18	8.95	20.66	1.30	0.20	0.20	68.49

Asphalt Raker, Asphalt Belly Dump Lay Down
Drill Doctor (in the field)
Driller (including, but not limited to wagon drills, air-track drills, hydraulic drills)
Pioneer Drilling & Drilling Off Tugger (all type drills)
Pipelayers
Powderman (Employee Possessor)
Storm Water Pollution Protection Plan Specialist (SWPPP Specialist)
Traffic Control Supervisor, DOT Qualified

Class Code	Classification of Laborers & Mechanics	BHR	H&W	PEN	TRN	Other Benefits		THR
Laborers (The area that is south of N63 latitude and west of W138 longitude) *See per diem note on last page								
						L&M	**LEG**	
S1205	Group IV	21.57	8.95	20.66	1.30	0.20	0.20	52.88
	Final Building Cleanup Permanent Yard Worker							
						L&M	**LEG**	
S1206	Group IIIB	40.97	6.24	20.66	1.30	0.20	0.20	69.57
	Driller (including, but not limited to wagon drills, air-track drills, hydraulic drills)(over 5,000 hours) Federal Powderman (Responsible Person in Charge) Grade Checking (setting or transferring of grade marks, line and grade, GPS, drones) Pioneer Drilling & Drilling Off Tugger (all type drills)(over 5,000 hours) Stake Hopper							
Millwrights *See per diem note on last page								
						L&M		
A1251	Millwright (journeyman)	44.00	10.08	12.28	1.10	0.40	0.05	67.91
						L&M		
A1252	Millwright Welder	45.00	10.08	12.28	1.10	0.40	0.05	68.91
Painters, Region I (North of N63 latitude) *See per diem note on last page								
						L&M		
N1301	Group I, including:	34.05	8.85	14.30	1.08	0.07		58.35
	Brush General Painter Hand Taping Hazardous Material Handler Lead-Based Paint Abatement Roll							
						L&M		
N1302	Group II, including:	34.57	8.85	14.30	1.08	0.07		58.87
	Bridge Painter Epoxy Applicator General Drywall Finisher Hand/Spray Texturing Industrial Coatings Specialist Machine/Automatic Taping Pot Tender Sandblasting							

Wage benefits key: BHR=basic hourly rate; H&W=health and welfare; IAF=industry advancement fund; LEG=legal fund; L&M=labor/management fund; PEN=pension fund; SAF=safety; SUI=supplemental unemployment insurance; S&L=SUI & LEG combined; TRN=training; THR=total hourly rate; VAC=vacation

Class Code	Classification of Laborers & Mechanics	BHR	H&W	PEN	TRN	Other Benefits	THR
Painters, Region I (North of N63 latitude) *See per diem note on last page							
						L&M	
N1302	Group II, including:	34.57	8.85	14.30	1.08	0.07	58.87
	Specialty Painter Spray Structural Steel Painter Wallpaper/Vinyl Hanger						
N1304	Group IV, including:	39.66	8.85	17.71	1.05	0.05	67.32
	Glazier Storefront/Automatic Door Mechanic						
N1305	Group V, including:	39.86	8.85	5.00	1.10	0.10	54.91
	Carpet Installer Floor Coverer Heat Weld/Cove Base Linoleum/Soft Tile Installer						
Painters, Region II (South of N63 latitude) *See per diem note on last page							
						L&M	
S1301	Group I, including :	31.19	8.85	15.15	1.08	0.07	56.34
	Brush General Painter Hand Taping Hazardous Material Handler Lead-Based Paint Abatement Roll Spray						
						L&M	
S1302	Group II, including :	32.44	8.85	15.15	1.08	0.07	57.59
	General Drywall Finisher Hand/Spray Texturing Machine/Automatic Taping Wallpaper/Vinyl Hanger						
						L&M	
S1303	Group III, including :	32.54	8.85	15.15	1.08	0.07	57.69
	Bridge Painter Epoxy Applicator Industrial Coatings Specialist Pot Tender Sandblasting						

Wage benefits key: BHR=basic hourly rate; H&W=health and welfare; IAF=industry advancement fund; LEG=legal fund; L&M=labor/management fund; PEN=pension fund; SAF=safety; SUI=supplemental unemployment insurance; S&L=SUI & LEG combined; TRN=training; THR=total hourly rate; VAC=vacation

Class Code	Classification of Laborers & Mechanics	BHR	H&W	PEN	TRN	Other Benefits		THR
Painters, Region II (South of N63 latitude) *See per diem note on last page								
						L&M		
S1303	Group III, including :	32.54	8.85	15.15	1.08	0.07		57.69
	Specialty Painter Structural Steel Painter							
						L&M		
S1304	Group IV, including:	39.87	8.85	16.75	1.08	0.07		66.62
	Glazier Storefront/Automatic Door Mechanic							
						L&M		
S1305	Group V, including:	39.86	8.85	5.00	1.10	0.10		54.91
	Carpet Installer Floor Coverer Heat Weld/Cove Base Linoleum/Soft Tile Installer							
Piledrivers *See per diem note on last page								
						L&M	**IAF**	
A1401	Piledriver	42.34	10.08	15.23	1.75	0.20	0.20	69.80
	Assistant Dive Tender Carpenter/Piledriver Rigger Sheet Stabber Skiff Operator							
						L&M	**IAF**	
A1402	Piledriver-Welder/Toxic Worker	43.34	10.08	15.23	1.75	0.20	0.20	70.80
						L&M	**IAF**	
A1403	Remotely Operated Vehicle Pilot/Technician	46.65	10.08	15.23	1.75	0.20	0.20	74.11
	Single Atmosphere Suit, Bell or Submersible Pilot							
						L&M	**IAF**	
A1404	Diver (working) **See note on last page	86.45	10.08	15.23	1.75	0.20	0.20	113.91
						L&M	**IAF**	
A1405	Diver (standby) **See note on last page	46.65	10.08	15.23	1.75	0.20	0.20	74.11
						L&M	**IAF**	
A1406	Dive Tender **See note on last page	45.65	10.08	15.23	1.75	0.20	0.20	73.11
						L&M	**IAF**	
A1407	Welder (American Welding Society, Certified Welding Inspector)	47.90	10.08	15.23	1.75	0.20	0.20	75.36
						L&M	**IAF**	
A1408	Dive Medic Technician (DMT) **See note on last page	46.65	10.08	15.23	1.75	0.20	0.20	74.11

Wage benefits key: BHR=basic hourly rate; H&W=health and welfare; IAF=industry advancement fund; LEG=legal fund; L&M=labor/management fund; PEN=pension fund; SAF=safety; SUI=supplemental unemployment insurance; S&L=SUI & LEG combined; TRN=training; THR=total hourly rate; VAC=vacation

Class Code	Classification of Laborers & Mechanics	BHR	H&W	PEN	TRN	Other Benefits		THR
	Plumbers, Region I (North of N63 latitude) *See per diem note on last page							
						L&M	**S&L**	
N1501	Journeyman Pipefitter	42.91	11.75	17.45	1.50	0.65		74.26
	Plumber							
	Welder							
	Plumbers, Region II (South of N63 latitude) *See per diem note on last page							
						L&M		
S1501	Journeyman Pipefitter	41.00	11.38	15.27	1.55	0.20		69.40
	Plumber							
	Welder							
	Plumbers, Region IIA (1st Judicial District) *See per diem note on last page							
						L&M		
X1501	Journeyman Pipefitter	39.82	13.37	11.75	2.50	0.24		67.68
	Plumber							
	Welder							
	Power Equipment Operators *See per diem note on last page							
						L&M		
A1601	Group I, including:	42.53	10.70	13.50	1.00	0.10	0.05	67.88
	Asphalt Roller: Breakdown, Intermediate, and Finish							
	Back Filler							
	Barrier Machine (Zipper)							
	Beltcrete with Power Pack & similar conveyors							
	Bending Machine							
	Boat Coxswain							
	Bulldozer							
	Cableways, Highlines & Cablecars							
	Cleaning Machine							
	Coating Machine							
	Concrete Hydro Blaster							
	Cranes (45 tons & under or 150 feet of boom & under (including jib & attachments))							
	(a) Hydralifts or Transporters, (all track or truck type)							
	(b) Derricks							
	(c) Overhead							
	Crushers							
	Deck Winches, Double Drum							
	Ditching or Trenching Machine (16 inch or over)							

Class Code	Classification of Laborers & Mechanics	BHR	H&W	PEN	TRN	Other Benefits		THR
	Power Equipment Operators *See per diem note on last page							
						L&M		
A1601	Group I, including:	42.53	10.70	13.50	1.00	0.10	0.05	67.88
	Drag Scraper, Yarder, and similar types							
	Drilling Machines, Core, Cable, Rotary and Exploration							
	Finishing Machine Operator, Concrete Paving, Laser Screed, Sidewalk, Curb & Gutter Machine							
	Grade Checker and/or Line and Grade including Drone							
	Helicopters							
	Hover Craft, Flex Craft, Loadmaster, Air Cushion, All-Terrain Vehicle, Rollagon, Bargecable, Nodwell, & Snow Cat							
	Hydro Ax, Feller Buncher & similar							
	Hydro Excavation (Vac-Truck and Similar)							
	Loaders (2 1/2 yards through 5 yards, including all attachments):							
	(a) Forklifts (with telescopic boom & swing attachment)							
	(b) Front End & Overhead, (2-1/2 yards through 5 yards)							
	(c) Loaders, (with forks or pipe clamp)							
	(d) Loaders, (elevating belt type, Euclid & similar types)							
	Material Transfer Vehicle (Elevating Grader, Pickup Machine, and similar types)							
	Mechanic, Welder, Bodyman, Electrical, Camp & Maintenance Engineer							
	Micro Tunneling Machine							
	Mixers: Mobile type with hoist combination							
	Motor Patrol Grader							
	Mucking Machine: Mole, Tunnel Drill, Horizontal/Directional Drill Operator and/or Shield							
	Off-Road Hauler (including Articulating and Haul Trucks)							
	Operator on Dredges							
	Piledriver Engineer, L.B. Foster, Puller or similar paving breaker							
	Plant Operator (Asphalt & Concrete)							
	Power Plant, Turbine Operator 200 k.w & over (power plants or combination of power units over 300 k.w.)							
	Remote Controlled Equipment							
	Scraper (through 40 yards)							
	Service Oiler/Service Engineer							
	Shot Blast Machine							
	Shovels, Backhoes, Excavators with all attachments, and Gradealls (3 yards & under)							
	Sideboom (under 45 tons)							
	Sub Grader (Gurries & similar types)							
	Tack Tractor							
	Truck Mounted Concrete Pump, Conveyor/Tele-belt, & Creter							
	Wate Kote Machine							

Class Code	Classification of Laborers & Mechanics	BHR	H&W	PEN	TRN	Other Benefits		THR
	Power Equipment Operators *See per diem note on last page							
						L&M		
A1602	Group IA, including:	44.29	10.70	13.50	1.00	0.10	0.05	69.64
	Camera/Tool/Video Operator (Slipline)							
	Certified Welder, Electrical Mechanic, Camp Maintenance Engineer, Mechanic (over 10,000 hours)							
	Cranes (over 45 tons or 150 feet including jib & attachments)							
	(a) Clamshells & Draglines (over 3 yards)							
	(b) Tower Cranes							
	Licensed Water/Waste Water Treatment Operator							
	Loaders (over 5 yards)							
	Motor Patrol Grader, Dozer, Grade Tractor (finish: when finishing to final grade and/or to hubs, or for asphalt)							
	Power Plants (1000 k.w. & over)							
	Profiler, Reclaimer, and Roto-Mill							
	Quad							
	Scrapers (over 40 yards)							
	Screed							
	Shovels, Backhoes, Excavators with all attachments (over 3 yards)							
	Sidebooms (over 45 tons)							
	Slip Form Paver, C.M.I. & similar types							
	Topside (Asphalt Paver, Slurry machine, Spreaders, and similar types)							
						L&M		
A1603	Group II, including:	41.76	10.70	13.50	1.00	0.10	0.05	67.11
	Boiler - Fireman							
	Cement Hogs & Concrete Pump Operator							
	Conveyors (except those listed in Group I)							
	Hoists on Steel Erection, Towermobiles & Air Tuggers							
	Horizontal/Directional Drill Locator							
	Locomotives, Rod & Geared Engines							
	Mixers							
	Screening, Washing Plant							
	Sideboom (cradling rock drill, regardless of size)							
	Skidder							
	Trenching Machines (under 16 inches)							
	Water/Waste Water Treatment Operator							
						L&M		
A1604	Group III, including:	41.04	10.70	13.50	1.00	0.10	0.05	66.39
	"A" Frame Trucks, Deck Winches							
	Bombardier (tack or tow rig)							
	Boring Machine							
	Brooms, Power (sweeper, elevator, vacuum, or similar)							
	Bump Cutter							

Class Code	Classification of Laborers & Mechanics	BHR	H&W	PEN	TRN	Other Benefits		THR
Power Equipment Operators								
	*See per diem note on last page							
						L&M		
A1604	Group III, including:	41.04	10.70	13.50	1.00	0.10	0.05	66.39
	Compressor							
	Farm Tractor							
	Forklift, Industrial Type							
	Gin Truck or Winch Truck (with poles when used for hoisting)							
	Hoists, Air Tuggers, Elevators							
	Loaders:							
	(a) Elevating-Athey, Barber Greene & similar types							
	(b) Forklifts or Lumber Carrier (on construction job sites)							
	(c) Forklifts, (with tower)							
	(d) Overhead & Front End, (under 2-l/2 yards)							
	Locomotives: Dinkey (air, steam, gas & electric) Speeders							
	Mechanics, Light Duty							
	Oil, Blower Distribution							
	Posthole Digger, Mechanical							
	Pot Fireman (power agitated)							
	Power Plant, Turbine Operator, (under 200 k.w.)							
	Pumps, Water							
	Roller (other than Asphalt)							
	Saws, Concrete							
	Skid Hustler							
	Skid Steer (with all attachments)							
	Stake Hopper							
	Straightening Machine							
	Tow Tractor							
						L&M		
A1605	Group IV, including:	34.83	10.70	13.50	1.00	0.10	0.05	60.18
	Crane Assistant Engineer/Rig Oiler							
	Drill Helper							
	Parts & Equipment Coordinator							
	Spotter							
	Steam Cleaner							
	Swamper (on trenching machines or shovel type equipment)							
Roofers								
	*See per diem note on last page							
						L&M		
A1701	Roofer & Waterproofer	44.62	12.75	3.91	0.81	0.10	0.06	62.25
						L&M		
A1702	Roofer Material Handler	31.23	12.75	3.91	0.81	0.10	0.06	48.86

Wage benefits key: BHR=basic hourly rate; H&W=health and welfare; IAF=industry advancement fund; LEG=legal fund; L&M=labor/management fund; PEN=pension fund; SAF=safety; SUI=supplemental unemployment insurance; S&L=SUI & LEG combined; TRN=training; THR=total hourly rate; VAC=vacation

Class Code	Classification of Laborers & Mechanics	BHR	H&W	PEN	TRN	Other Benefits	THR
Sheet Metal Workers, Region I (North of N63 latitude) *See per diem note on last page							
						L&M	
N1801	Sheet Metal Journeyman	49.04	11.85	14.61	1.80	0.12	77.42

Air Balancing and duct cleaning of HVAC systems
Brazing, soldering or welding of metals
Demolition of sheet metal HVAC systems
Fabrication and installation of exterior wall sheathing, siding, metal roofing, flashing, decking and architectural sheet metal work
Fabrication and installation of heating, ventilation and air conditioning ducts and equipment
Fabrication and installation of louvers and hoods
Fabrication and installation of sheet metal lagging
Fabrication and installation of stainless steel commercial or industrial food service equipment
Manufacture, fabrication assembly, installation and alteration of all ferrous and nonferrous metal work
Metal lavatory partitions
Preparation of drawings taken from architectural and engineering plans required for fabrication and erection of sheet metal work
Sheet Metal shelving
Sheet Metal venting, chimneys and breaching
Skylight installation

Sheet Metal Workers, Region II (South of N63 latitude) *See per diem note on last page							
						L&M	
S1801	Sheet Metal Journeyman	43.75	11.85	14.39	1.68	0.43	72.10

Air Balancing and duct cleaning of HVAC systems
Brazing, soldering or welding of metals
Demolition of sheet metal HVAC systems
Fabrication and installation of exterior wall sheathing, siding, metal roofing, flashing, decking and architectural sheet metal work
Fabrication and installation of heating, ventilation and air conditioning ducts and equipment
Fabrication and installation of louvers and hoods
Fabrication and installation of sheet metal lagging
Fabrication and installation of stainless steel commercial or industrial food service equipment
Manufacture, fabrication assembly, installation and alteration of all ferrous and nonferrous metal work
Metal lavatory partitions
Preparation of drawings taken from architectural and engineering plans required for fabrication and erection of sheet metal work
Sheet Metal shelving
Sheet Metal venting, chimneys and breaching

Class Code	Classification of Laborers & Mechanics	BHR	H&W	PEN	TRN	Other Benefits	THR
Sheet Metal Workers, Region II (South of N63 latitude) *See per diem note on last page							
S1801	Sheet Metal Journeyman	43.75	11.85	14.39	1.68	L&M 0.43	72.10
	Skylight installation						
Sprinkler Fitters *See per diem note on last page							
A1901	Sprinkler Fitter	49.10	10.55	18.05	0.52	L&M 0.25	78.47
Surveyors *See per diem note on last page							
A2001	Chief of Parties	45.16	11.83	13.14	1.15	L&M 0.10	71.38
A2002	Party Chief	43.57	11.83	13.14	1.15	L&M 0.10	69.79
A2003	Line & Grade Technician/Office Technician/GPS, Drones	42.97	11.83	13.14	1.15	L&M 0.10	69.19
A2004	Associate Party Chief (including Instrument Person & Head Chain Person)/Stake Hop/Grademan	40.85	11.83	13.14	1.15	L&M 0.10	67.07
A2006	Chain Person (for crews with more than 2 people)	36.51	11.83	13.14	1.15	L&M 0.10	62.73
Truck Drivers *See per diem note on last page							
A2101	Group I, including:	41.94	11.83	13.14	1.15	L&M 0.10	68.16
	Air/Sea Traffic Controllers						
	Ambulance/Fire Truck Driver (EMT certified)						
	Boat Coxswain						
	Captains & Pilots (air & water)						
	Deltas, Commanders, Rollagons, & similar equipment (when pulling sleds, trailers or similar equipment)						
	Dump Trucks (including rockbuggy, side dump, belly dump, & trucks with pups) over 40 yards up to & including 60 yards						
	Helicopter Transporter						
	Liquid Vac Truck/Super Vac Truck						
	Material Coordinator or Purchasing Agent						
	Ready-mix (over 12 yards up to & including 15 yards) (over 15 yards to be negotiated)						
	Semi with Double Box Mixer						

Wage benefits key: BHR=basic hourly rate; H&W=health and welfare; IAF=industry advancement fund; LEG=legal fund; L&M=labor/management fund; PEN=pension fund; SAF=safety; SUI=supplemental unemployment insurance; S&L=SUI & LEG combined; TRN=training; THR=total hourly rate; VAC=vacation

Class Code	Classification of Laborers & Mechanics	BHR	H&W	PEN	TRN	Other Benefits	THR
Truck Drivers	*See per diem note on last page						
						L&M	
A2101	Group I, including:	41.94	11.83	13.14	1.15	0.10	68.16
	Tireman, Heavy Duty/Fueler Water Wagon (250 Bbls and above)						
						L&M	
A2102	Group 1A including:	43.21	11.83	13.14	1.15	0.10	69.43
	Dump Trucks (including rockbuggy, side dump, belly dump & trucks with pups) over 60 yards up to & including 100 yards (over 100 yards to be negotiated) Jeeps (driver under load) Lowboys, including tractor attached trailers & jeeps, up to & including 12 axles (over 12 axles or 150 tons to be negotiated)						
						L&M	
A2103	Group II, including:	40.68	11.83	13.14	1.15	0.10	66.90
	All Deltas, Commanders, Rollagons, & similar equipment Batch Trucks (8 yards & up) Batch Trucks (up to & including 7 yards) Boom Truck/Knuckle Truck (over 5 tons) Cacasco Truck/Heat Stress Truck Construction and Material Safety Technician Dump Trucks (including rockbuggy, side dump, belly dump, & trucks with pups) over 20 yards up to & including 40 yards Gin Pole Truck, Winch Truck, Wrecker (truck mounted "A" frame manufactured rating over 5 tons) Mechanics Oil Distributor Driver Partsman Ready-mix (up to & including 12 yards) Stringing Truck Turn-O-Wagon or DW-10 (not self loading)						
						L&M	
A2104	Group III, including:	39.86	11.83	13.14	1.15	0.10	66.08
	Boom Truck/Knuckle Truck (up to & including 5 tons) Dump Trucks (including rockbuggy, side dump, belly dump, & trucks with pups) over 10 yards up to & including 20 yards Expeditor (electrical & pipefitting materials) Gin Pole Truck, Winch Truck, Wrecker (truck mounted "A" frame manufactured rating 5 tons & under) Greaser - Shop Semi or Truck & Trailer Thermal Plastic Layout Technician Traffic Control Technician Trucks/Jeeps (push or pull)						

Class Code	Classification of Laborers & Mechanics	BHR	H&W	PEN	TRN	Other Benefits	THR
Truck Drivers	*See per diem note on last page						
						L&M	
A2105	Group IV, including:	39.28	11.83	13.14	1.15	0.10	65.50

Air Cushion or similar type vehicle
All Terrain Vehicle
Buggymobile
Bull Lift & Fork Lift, Fork Lift with Power Boom & Swing Attachment (over 5 tons)
Bus Operator (over 30 passengers)
Cement Spreader, Dry
Combination Truck-Fuel & Grease
Compactor (when pulled by rubber tired equipment)
Dump Trucks (including rockbuggy, side dump, belly dump, & trucks with pups) up to & including 10 yards
Dumpster
Expeditor (general)
Fire Truck/Ambulance Driver
Flat Beds, Dual Rear Axle
Foam Distributor Truck Dual Axle
Front End Loader with Fork
Grease Truck
Hydro Seeder, Dual Axle
Hyster Operators (handling bulk aggregate)
Loadmaster (air & water operations)
Lumber Carrier
Ready-mix, (up to & including 7 yards)
Rigger (air/water/oilfield)
Tireman, Light Duty
Track Truck Equipment
Truck Vacuum Sweeper
Warehouseperson
Water Truck (Below 250 Bbls)
Water Truck (straight)
Water Wagon, Semi

						L&M	
A2106	Group V, including:	38.52	11.83	13.14	1.15	0.10	64.74

Buffer Truck
Bull Lifts & Fork Lifts, Fork Lifts with Power Boom & Swing Attachments (up to & including 5 tons)
Bus Operator (up to 30 passengers)
Farm Type Rubber Tired Tractor (when material handling or pulling wagons on a construction project)
Flat Beds, Single Rear Axle
Foam Distributor Truck Single Axle

Class Code	Classification of Laborers & Mechanics	BHR	H&W	PEN	TRN	Other Benefits	THR
Truck Drivers							
	*See per diem note on last page						
						L&M	
A2106	Group V, including:	38.52	11.83	13.14	1.15	0.10	64.74
	Fuel Handler (station/bulk attendant)						
	Gear/Supply Truck						
	Gravel Spreader Box Operator on Truck						
	Hydro Seeders, Single axle						
	Pickups (pilot cars & all light-duty vehicles)						
	Rigger/Swamper						
	Tack Truck						
	Team Drivers (horses, mules, & similar equipment)						
Tunnel Workers, Laborers (The Alaska areas north of N63 latitude and east of W138 longitude)							
	*See per diem note on last page						
						L&M	**LEG**
N2201	Group I, including:	35.20	8.95	20.66	1.30	0.20	0.20	66.51
	Brakeman						
	Mucker						
	Nipper						
	Storm Water Pollution Protection Plan Worker (SWPPP Worker - erosion and sediment control Laborer)						
	Topman & Bull Gang						
	Tunnel Track Laborer						
						L&M	**LEG**
N2202	Group II, including:	36.30	8.95	20.66	1.30	0.20	0.20	67.61
	Burning & Cutting Torch						
	Certified Erosion Sediment Control Lead (CESCL Laborer)						
	Concrete Laborer						
	Floor Preparation, Core Drilling						
	Jackhammer/Chipping Gun or Pavement Breaker						
	Laser Instrument Operator						
	Nozzlemen, Pumpcrete or Shotcrete						
	Pipelayer Helper						
						L&M	**LEG**
N2203	Group III, including:	37.29	8.95	20.66	1.30	0.20	0.20	68.60
	Miner						
	Retimberman						
						L&M	**LEG**
N2204	Group IIIA, including:	40.90	8.95	20.66	1.30	0.20	0.20	72.21
	Asphalt Raker, Asphalt Belly Dump Lay Down						
	Drill Doctor (in the field)						
	Driller (including, but not limited to wagon drills, air-track drills, hydraulic drills)						

Class Code	Classification of Laborers & Mechanics	BHR	H&W	PEN	TRN	Other Benefits		THR
						L&M	LEG	
Tunnel Workers, Laborers (The Alaska areas north of N63 latitude and east of W138 longitude) *See per diem note on last page								
N2204	Group IIIA, including:	40.90	8.95	20.66	1.30	0.20	0.20	72.21
	Pioneer Drilling & Drilling Off Tugger (all type drills)							
	Pipelayer							
	Powderman (Employee Possessor)							
	Storm Water Pollution Protection Plan Specialist (SWPPP Specialist)							
	Traffic Control Supervisor, DOT Qualified							
						L&M	LEG	
N2206	Group IIIB, including:	45.07	6.24	20.66	1.30	0.20	0.20	73.67
	Driller (including, but not limited to wagon drills, air-track drills, hydraulic drills)(over 5,000 hours)							
	Federal Powderman (Responsible Person in Charge)							
	Grade Checking (setting or transferring of grade marks, line and grade, GPS, drones)							
	Pioneer Drilling & Drilling Off Tugger (all type drills)(over 5,000 hours)							
	Stake Hopper							
Tunnel Workers, Laborers (The area that is south of N63 latitude and west of W138 longitude) *See per diem note on last page								
						L&M	LEG	
S2201	Group I, including:	35.20	8.95	20.66	1.30	0.20	0.20	66.51
	Brakeman							
	Mucker							
	Nipper							
	Storm Water Pollution Protection Plan Worker (SWPPP Worker - erosion and sediment control Laborer)							
	Topman & Bull Gang							
	Tunnel Track Laborer							
						L&M	LEG	
S2202	Group II, including:	36.30	8.95	20.66	1.30	0.20	0.20	67.61
	Burning & Cutting Torch							
	Certified Erosion Sediment Control Lead (CESCL Laborer)							
	Concrete Laborer							
	Floor Preparation, Core Drilling							
	Jackhammer/Chipping Gun or Pavement Breaker							
	Laser Instrument Operator							
	Nozzlemen, Pumpcrete or Shotcrete							
	Pipelayer Helper							
						L&M	LEG	
S2203	Group III, including:	37.29	8.95	20.66	1.30	0.20	0.20	68.60
	Miner							
	Retimberman							

Wage benefits key: BHR=basic hourly rate; H&W=health and welfare; IAF=industry advancement fund; LEG=legal fund; L&M=labor/management fund; PEN=pension fund; SAF=safety; SUI=supplemental unemployment insurance; S&L=SUI & LEG combined; TRN=training; THR=total hourly rate; VAC=vacation

Class Code	Classification of Laborers & Mechanics	BHR	H&W	PEN	TRN	Other Benefits		THR
	Tunnel Workers, Laborers (The area that is south of N63 latitude and west of W138 longitude) *See per diem note on last page							
						L&M	**LEG**	
S2204	Group IIIA, including:	40.90	8.95	20.66	1.30	0.20	0.20	72.21
	Asphalt Raker, Asphalt Belly Dump Lay Down Drill Doctor (in the field) Driller (including, but not limited to wagon drills, air-track drills, hydraulic drills) Pioneer Drilling & Drilling Off Tugger (all type drills) Pipelayer Powderman (Employee Possessor) Storm Water Pollution Protection Plan Specialist (SWPPP Specialist) Traffic Control Supervisor, DOT Qualified							
						L&M	**LEG**	
S2206	Group IIIB, including:	45.07	6.24	20.66	1.30	0.20	0.20	73.67
	Driller (including, but not limited to wagon drills, air-track drills, hydraulic drills)(over 5,000 hours) Federal Powderman (Responsible Person in Charge) Grade Checking (setting or transferring of grade marks, line and grade, GPS, drones) Pioneer Drilling & Drilling Off Tugger (all type drills)(over 5,000 hours) Stake Hopper							
	Tunnel Workers, Power Equipment Operators *See per diem note on last page							
						L&M		
A2207	Group I	46.78	10.70	13.50	1.00	0.10	0.05	72.13
						L&M		
A2208	Group IA	48.72	10.70	13.50	1.00	0.10	0.05	74.07
						L&M		
A2209	Group II	45.94	10.70	13.50	1.00	0.10	0.05	71.29
						L&M		
A2210	Group III	45.14	10.70	13.50	1.00	0.10	0.05	70.49
						L&M		
A2211	Group IV	38.31	10.70	13.50	1.00	0.10	0.05	63.66

*** Per diem is an established practice for this classification. This means that per diem is an allowable alternative to board and lodging if all criteria are met. See 8 AAC 30.051-08 AAC 30.056, and the per diem information on page vii of this Pamphlet.**

**** Work in combination of classifications: Employees working in any combination of classifications within the diving crew (working diver, standby diver, and tender) in a shift are paid in the classification with the highest rate for a minimum of 8 hours per shift.**

SECTION 00852 – PERMITS

PART 1 - GENERAL

1.1 INDEX OF PERMITS

A. CONTRACTOR will be required to submit a Traffic Control Plan and a CBJ Right-of-Way permit application to CBJ Engineering Department for approval at the pre-construction conference.

B. State of Alaska Department of Transportation, Department of Transportation and Public Facilities, Utility Permit, Permit No. 3-296000-22-36, dated December 10, 2021, attached and made part of this Contract, consisting of 18 pages.

PART 2 – PRODUCTS (Not Used)

PART 3 – EXECUTION (Not Used)

END OF SECTION

25D-263 (5/86)

STATE OF ALASKA
DEPARTMENT OF TRANSPORTATION
AND PUBLIC FACILITIES
UTILITY PERMIT
(MAJOR)

Permit No.
3-296000-22-36

Approval
Recommended: Martin Peters

Date: 12/9/2021

Title: Regional Permit Officer

Region: Southcoast

****

THE STATE OF ALASKA, acting by and through the DEPARTMENT OF TRANSPORTATION AND PUBLIC FACILITIES, hereinafter called the DEPARTMENT, under provisions of AS 19.25.010 19.25.020, grants a Utility Permit to **City & Borough of Juneau** of **155 South Seward Street, Juneau AK 99801** hereinafter called the PERMITTEE, permission to construct, install and thereafter perform routine maintenance, use and operate **16 HDPE Water Main Replacement for existing 12 " DI** hereinafter called the FACILITY, located as follows: State Route **296000 Glacier Egan Drive** Route Mileage **3.52 to 3.55** across, along or under property of the DEPARTMENT, acquired and utilized in the operation and maintenance of a State Transportation System, at the aforementioned locations and/or positions and in strict conformance with plans, specifications and special provisions attached hereto and made a part hereof, and not otherwise.

A. In accepting this Utility Permit for the Facility, the PERMITTEE agrees to comply with the provisions of AS 02.15.102, AS 02.15.106, AS 19.25.010, AS 19.25.200, AS 35.10.210, and AS 35.10.230; the terms, requirements and regulations as set forth in 17 AAC 15 as authorized under Administrative Procedures Act, AS 44.62.010 - 44.62.650 and the applicable policies, directives and orders issued by the Commissioner of the Department.

B. The entire cost of routine maintenance operations of the FACILITY are to be paid for by the PERMITTEE, and said FACILITY shall comply with all applicable codes.

C. The PERMITTEE's construction, installation and maintenance operations of the FACILITY shall be accomplished with minimum interference and interruption of the use, operation and maintenance of the DEPARTMENT's right of way and/or public facility; or as hereinafter provided in the DEPARTMENT's Special Provisions, attached hereto and made a part hereof, and shall at all times in no way endanger the general public in its use of the public property. Utility Permits expire if construction or installation of the facility has not started within one year after the date of approval, unless the applicant obtains an extension of time in writing from the department. 17AAC15.011(d)

D. The DEPARTMENT, in granting the Utility Permit, reserves the right to use, occupy and enjoy its property for a public transportation system and for public transportation purposes in such a manner and at such times as it deems necessary, the same as if this instrument had not been executed by the DEPARTMENT. If any such use by the DEPARTMENT shall at any time necessitate any change in location or manner of use of said FACILITY, or any part thereof, such change or alteration shall be made by the PERMITTEE according to the terms of one of the two clauses set out below as identified by a check mark before the applicable clause.

_____(1) The PERMITTEE will be reimbursed in full by the DEPARTMENT for all costs incurred in making such changes or alterations to the FACILITY that qualified under the provisions of AS 02.15.104(c), AS 19.25.020(c), or AS 35.10.220(c).

__X__(2) The PERMITTEE shall promptly remove or relocate said FACILITY at no cost to the DEPARTMENT in accordance with the provisions of AS 02.15.104(c) (4) or (5), AS 19.25.020(c) (4) or (5), AS 35.10.220(c) (4) or (5).

E. On public property being utilized for right of way on highways originally established as, or converted to, controlled access highways, ingress and egress thereto for maintenance and operation of the FACILITY is limited to the locations as designated by the DEPARTMENT. However, the DEPARTMENT may allow the PERMITTEE ingress and egress whenever such is necessary to effect repairs and maintenance of the FACILITY and when no other access is available. If the DEPARTMENT determines such access is in conflict with the use of the controlled access highway, the FACILITY will be relocated.

F. The State of Alaska and the DEPARTMENT for the purpose of this Utility Permit, hereby disclaim any representation of implication to the PERMITTEE that the DEPARTMENT has any title in any property other than the interest conveyed to the DEPARTMENT for specific purposes as described by the instrument conveying the land to the DEPARTMENT.

G. The PERMITTEE by these presents accepts notice and agrees that any expenses or damages incurred by the PERMITTEE through the abandonment, removal, reconstruction or alteration of any public facility, or incurred by said PERMITTEE as a result of this disclaimer shall be borne by said PERMITTEE at no expense whatsoever to the DEPARTMENT or the State of Alaska.

H. The waiver or breach of any terms or conditions of this Utility Permit or Provisions of the Administrative Code, by the DEPARTMENT shall be limited to the act or acts constituting such breach, and shall never be construed as being continuing or a permanent waiver of any such term or condition, unless expressly agreed to in writing by the parties hereto, all of which shall remain in full force and affect as to future acts or happenings, notwithstanding any such individual waiver or any breach thereof.

I. Only the Commissioner of the DEPARTMENT or his delegate shall have the authority to waive any term or condition herein contained.

J. The PERMITTEE shall not assign or transfer any of the rights authorized by this Utility Permit except upon notification to and approval by the DEPARTMENT.

K The PERMITTEE agrees to comply with all regulations concerning present and future use of the public property acquired, or reimbursed by Federal-Aid funds.

L. The PERMITTEE shall give the DEPARTMENT not less than ten (10) days prior written notice, unless otherwise agreed to by the parties hereto, of the PERMITTEE's intention to enter upon the DEPARTMENT's property for the purpose of major maintenance, reconstruction, altering or removal of the FACILITY, provided, however, that normal routine maintenance is excepted from this provision, and provided further, that in any instance of sudden emergency requiring prompt and immediate action to protect the public safety, or to mitigate damage to private or public property, no prior notification to the DEPARTMENT will be required. The PERMITTEE shall notify the DEPARTMENT and the Alaska State Troopers, of the location of the emergency and extent of work required by the most expeditious means of communication as soon as reasonably possible to do so, and the PERMITTEE shall take such measures as are required to protect the health and safety of the traveling public or public facility users for the duration of such emergency operations.

M. The PERMITTEE shall indemnify and hold harmless the State of Alaska and the DEPARTMENT, or either of them, from all liability for damage to property, or injury to or death of persons, arising wholly or in part from any action taken by the PERMITTEE in relation to the PERMITTEE's FACILITIES on DEPARTMENT rights of way or other permitted locations.

N. The permit is subject to all previous Easements and Utility Permits and any damage to any other utility will be the PERMITTEE's responsibility.

O. The PERMITTEE agrees to be responsible for the compliance with all applicable Federal, State, and local laws, regulations, codes and ordinances.

P. The PERMITTEE agrees to be responsible for obtaining all other appropriate permits or letters of non-objection needed from Federal, State and local agencies, or conflicting lessees, property owners or utilities.

Q. The PERMITTEE may be required, within thirty (30) days after completion of any improvement placed upon or in the premises herein, deliver to the DEPARTMENT as-built drawings showing the location and construction specifications of said improvement.

R. This Utility Permit is issued under the provisions of applicable Alaska Statutes and Administrative Code, effective as of the date of execution of this instrument by the DEPARTMENT.

S. The PERMITTEE agrees that the FACILITY will be constructed in accordance with the attached:

1. **Plans dated, 12-7-2021**

2. **Specifications consisting of; City & Borough of Juneau, (CBJ) and Department of Transportation and Public Facilities (ADOT&PF) Standard Specifications.**

3. Other *See Below.

Which, by this reference, are made a part hereof, and in accordance with the applicable codes pertaining to the FACILITY, and not otherwise, unless prior written authorization is obtained from the DEPARTMENT to do so.

T. The PERMITTEE agrees to reimburse the DEPARTMENT for actual costs of inspection and testing as required during the performance of work proposed by the PERMITTEE. The scope of inspection and testing shall be determined by the Regional Utilities Engineer. The costs billed to the PERMITTEE will be the actual DEPARTMENT's costs incurred while performing the inspection and testing.

U. The PERMITTEE agrees by entering on the DEPARTMENT's property to indemnify the DEPARTMENT and its contractors of all costs tangible or intangible that would be the result of any delay in a construction project of the DEPARTMENT caused by work done under this permit.

V. The PERMITTEE agrees to reimburse the DEPARTMENT for the length of the facility to be installed in excess of 200 feet (as indicated on the attached plans referenced to in paragraph "S" above) which is calculated to be 83 linear feet at $1.00 per foot = $83.00 (but not to exceed $10,000) payable at the time the permit is executed by the DEPARTMENT unless arrangements have been made for the PERMITTEE to be billed on a monthly basis.

Added Special Conditions:
It is the responsibility of the PERMITTEE to assure that their contractor has fully read and understands the permit. Permittee must maintain 4 foot of cover above conduits.

PIPE CARRIERS

TRANSMITTANT: Domestic Water FLASH POINT: N/A

WORKING PRESSURE: 75 PSI TEMPERATURE: ~46°F

NUMBER OF CONDUITS (PIPES): 1

DIAMETER OF PIPE: 16-inch

TYPE AND CLASS OF PIPE: HDPE

ENCASEMENT DIAMETER AND TYPE: N/A

VENT LOCATIONS: N/A LEFT N/A RIGHT OF HIGHWAY CENTERLINE

CATHODIC PROTECTION: 18lb bare weight zinc w/ prepackaged anode backfill

CROSSING ANGLE: N/A LENGTH: N/A

DEPTH BELOW ROAD SURFACE (MIN 48"): 5' MIN

DEPTH BELOW DITCH BOTTOM (MIN 36"): N/A

METHOD OF CROSSING INSTALLATION: BORING ____ JACKING ____ OPEN CUT X

LONGITUDINAL FACILITY LENGTH: 283LF

OFFSET FROM HIGHWAY CENTERLINE: ~120 FT DEPTH OF BURIAL (MIN 36"): 5' MIN

METHOD OF LONGITUDINAL INSTALLATION: TRENCHING X PLOWING ____

CONSTRUCTION CODE(S) APPLICABLE: CBJ Standard Specifications and Details (current edition)

ADDITIONAL INFORMATION:

SHEET NOTES

1. PROVIDE ALL ADAPTERS, ELBOWS, AND OTHER FITTINGS NECESSARY TO CONNECT TO DISSIMILAR PIPE SIZES, MATERIALS AND DEPTHS.
2. REMOVE AND RESET 16 L.F. OF EXISTING 6" CHAIN LINK FENCE FOR TEMPORARY PEDESTRIAN PATH CONSTRUCTION.
3. CONSTRUCT TEMPORARY 8' WIDE PEDESTRIAN PATH OUTSIDE OF WORK ZONE. PATH SURFACE TO BE 6" DEPTH BASE COURSE GRADING D-1. CONTRACTOR TO SUBMIT TRAFFIC CONTROL PLAN SHOWING PATH CLOSED AND DETOUR SIGNAGE TO SAFELY ALLOW PEDESTRIAN ACCESS THROUGH THE WORK ZONE. AREA TO RECEIVE 3" TOPSOIL AND SEED FOLLOWING COMPLETION OF BIKE PATH REPAVING.
4. CONTRACTOR TO PROTECT AND MAINTAIN EXISTING 12" DUCTILE IRON WATER MAIN UNTIL CONNECTION FROM NEW 16" HDPE TO EXISTING 12" DI WATER MAIN TAKES PLACE. AFTER 16" HDPE WATER LINE ACCEPTED THE 12" DI WATER SHALL BE FILLED WITH SLURRY.
5. REMOVE AND REPLACE EXISTING ASPHALT PAVEMENT FOR NEW 16" HDPE WATER MAIN INSTALLATION. SEE DETAIL 1 SHEET C100 FOR TYPICAL SECTION.
6. PROTECT AND MAINTAIN ALL EXISTING UNDERGROUND UTILITIES WITHIN WORK LIMITS OF NEW 16" HDPE WATERLINE.
7. CONTRACTOR TO FIELD LOCATE EXISTING 24" DI WATER LINE PRIOR TO INSTALLING NEW 16" HDPE WATER LINE TO DETERMINE ACTUAL DEPTH AND LOCATION. PROJECT DESIGN ASSUMES NEW 16" HDPE WILL UNDER THE EXISTING 24" DI WATER LINE.
8. DISTURBED AREAS TO RECEIVE 3" DEPTH TOPSOIL AND SEED.

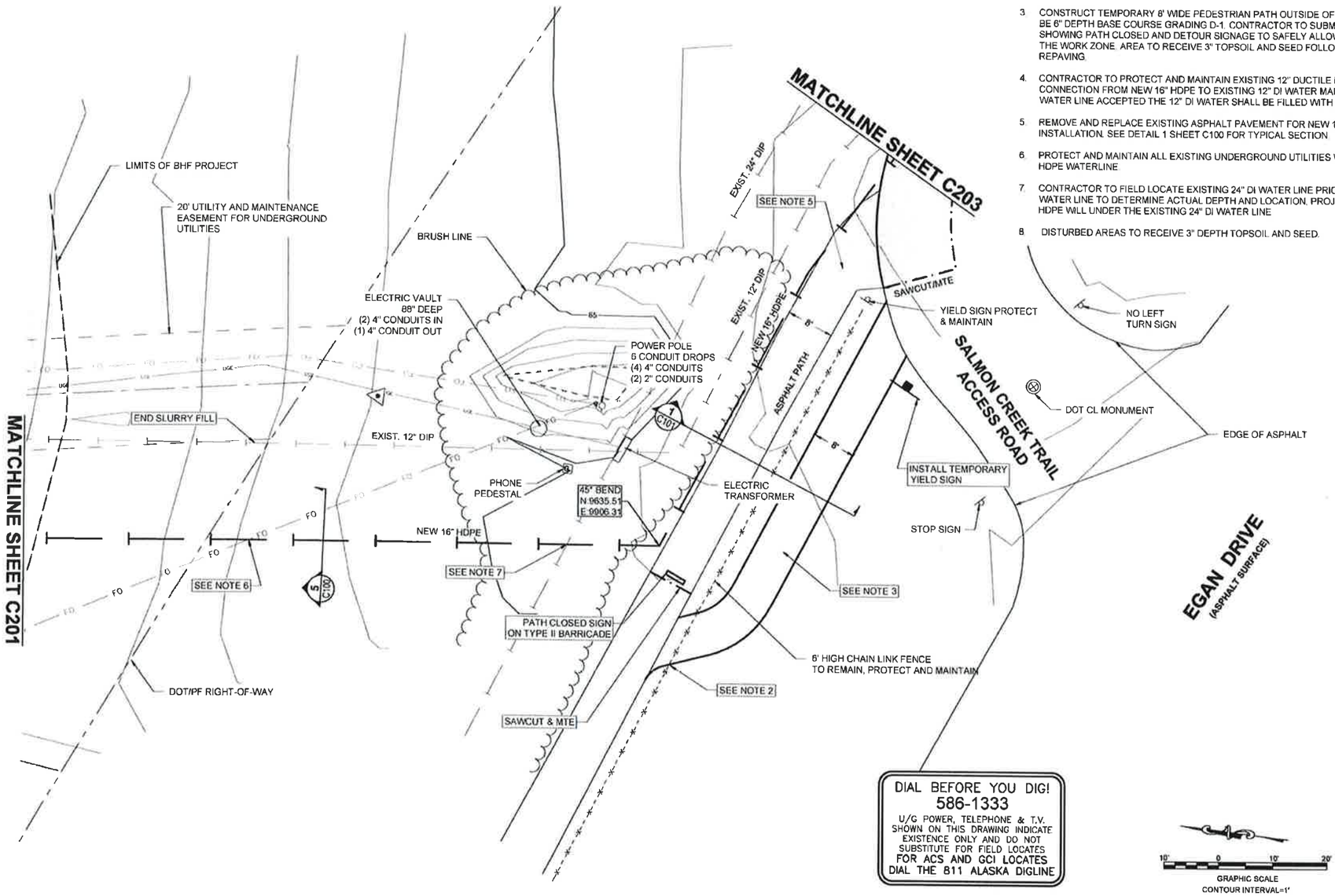

N:\Projects\03323 21285-C&J_BRH_WTR\C3D\Sheet\21285JN.dwg PLOT: December 07, 2021 at: 10:43am

DESIGN JMP
DRAWN JMK
CHECK JMP
APPROVED JMP
FILE:

No.	DATE	REVISION

CITY AND BOROUGH OF JUNEAU
ALASKA'S CAPITAL CITY
ENGINEERING & PUBLIC WORKS DEPARTMENT

PDC ENGINEERS
PLAN • DESIGN • CONSTRUCT
A BESPEC COMPANY
9109 Mendenhall Mall Rd. Ste. 4, Juneau, AK 99801
907.780.6060 | AECC605

STATE OF ALASKA 49TH PROFESSIONAL ENGINEER JOSEPH D. PUSICH CE 8152

BARTLETT REGIONAL HOSPITAL
WATER AND SEWER UPGRADES

CBJ CONTRACT No. BE22-185
CITY & BOROUGH OF JUNEAU, ALASKA

UTILITY PLAN VIEW

DATE Dec 07, 2021
PDC No 21285JN
SHEET C202

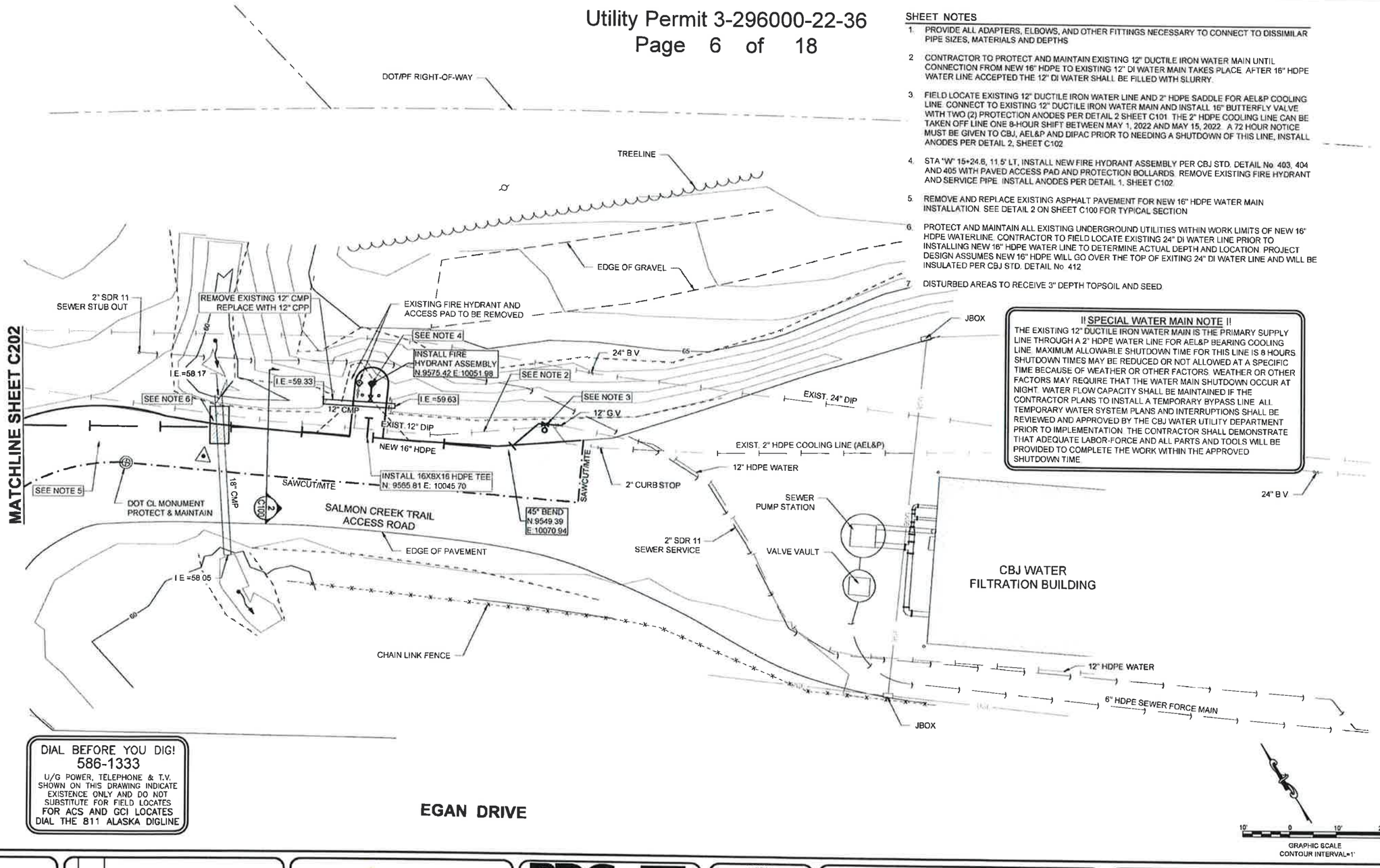

SHEET NOTES

1. PROVIDE ALL ADAPTERS, ELBOWS, AND OTHER FITTINGS NECESSARY TO CONNECT TO DISSIMILAR PIPE SIZES, MATERIALS AND DEPTHS
2. CONTRACTOR TO PROTECT AND MAINTAIN EXISTING 12" DUCTILE IRON WATER MAIN UNTIL CONNECTION FROM NEW 16" HDPE TO EXISTING 12" DI WATER MAIN TAKES PLACE. AFTER 16" HDPE WATER LINE ACCEPTED THE 12" DI WATER SHALL BE FILLED WITH SLURRY.
3. FIELD LOCATE EXISTING 12" DUCTILE IRON WATER LINE AND 2" HDPE SADDLE FOR AEL&P COOLING LINE. CONNECT TO EXISTING 12" DUCTILE IRON WATER MAIN AND INSTALL 16" BUTTERFLY VALVE WITH TWO (2) PROTECTION ANODES PER DETAIL 2 SHEET C101. THE 2" HDPE COOLING LINE CAN BE TAKEN OFF LINE ONE 8-HOUR SHIFT BETWEEN MAY 1, 2022 AND MAY 15, 2022. A 72 HOUR NOTICE MUST BE GIVEN TO CBJ, AEL&P AND DIPAC PRIOR TO NEEDING A SHUTDOWN OF THIS LINE. INSTALL ANODES PER DETAIL 2, SHEET C102
4. STA "W" 15+24.6, 11.5' LT, INSTALL NEW FIRE HYDRANT ASSEMBLY PER CBJ STD. DETAIL No. 403, 404 AND 405 WITH PAVED ACCESS PAD AND PROTECTION BOLLARDS. REMOVE EXISTING FIRE HYDRANT AND SERVICE PIPE. INSTALL ANODES PER DETAIL 1, SHEET C102.
5. REMOVE AND REPLACE EXISTING ASPHALT PAVEMENT FOR NEW 16" HDPE WATER MAIN INSTALLATION. SEE DETAIL 2 ON SHEET C100 FOR TYPICAL SECTION
6. PROTECT AND MAINTAIN ALL EXISTING UNDERGROUND UTILITIES WITHIN WORK LIMITS OF NEW 16" HDPE WATERLINE. CONTRACTOR TO FIELD LOCATE EXISTING 24" DI WATER LINE PRIOR TO INSTALLING NEW 16" HDPE WATER LINE TO DETERMINE ACTUAL DEPTH AND LOCATION. PROJECT DESIGN ASSUMES NEW 16" HDPE WILL GO OVER THE TOP OF EXITING 24" DI WATER LINE AND WILL BE INSULATED PER CBJ STD. DETAIL No. 412
7. DISTURBED AREAS TO RECEIVE 3" DEPTH TOPSOIL AND SEED.

!! SPECIAL WATER MAIN NOTE !!

THE EXISTING 12" DUCTILE IRON WATER MAIN IS THE PRIMARY SUPPLY LINE THROUGH A 2" HDPE WATER LINE FOR AEL&P BEARING COOLING LINE. MAXIMUM ALLOWABLE SHUTDOWN TIME FOR THIS LINE IS 8 HOURS. SHUTDOWN TIMES MAY BE REDUCED OR NOT ALLOWED AT A SPECIFIC TIME BECAUSE OF WEATHER OR OTHER FACTORS. WEATHER OR OTHER FACTORS MAY REQUIRE THAT THE WATER MAIN SHUTDOWN OCCUR AT NIGHT. WATER FLOW CAPACITY SHALL BE MAINTAINED IF THE CONTRACTOR PLANS TO INSTALL A TEMPORARY BYPASS LINE. ALL TEMPORARY WATER SYSTEM PLANS AND INTERRUPTIONS SHALL BE REVIEWED AND APPROVED BY THE CBJ WATER UTILITY DEPARTMENT PRIOR TO IMPLEMENTATION. THE CONTRACTOR SHALL DEMONSTRATE THAT ADEQUATE LABOR-FORCE AND ALL PARTS AND TOOLS WILL BE PROVIDED TO COMPLETE THE WORK WITHIN THE APPROVED SHUTDOWN TIME.

DIAL BEFORE YOU DIG!
586-1333
U/G POWER, TELEPHONE & T.V. SHOWN ON THIS DRAWING INDICATE EXISTENCE ONLY AND DO NOT SUBSTITUTE FOR FIELD LOCATES.
FOR ACS AND GCI LOCATES DIAL THE 811 ALASKA DIGLINE

DESIGN	JMP
DRAWN	JMK
CHECK	JMP
APPROVED	JMP
FILE:	

No	DATE	REVISION

CITY AND BOROUGH OF JUNEAU
ALASKA'S CAPITAL CITY
ENGINEERING & PUBLIC WORKS DEPARTMENT

PDC ENGINEERS
PLAN • DESIGN • CONSTRUCT
A RESPEC COMPANY
9109 Mendenhall Mall Rd. Ste. 4, Juneau, AK 99801
907.780.6060 | AECC605

STATE OF ALASKA — 49TH — JOSEPH M PUSICH — ACE 8152 — REGISTERED PROFESSIONAL ENGINEER — PRELIMINARY

BARTLETT REGIONAL HOSPITAL
WATER AND SEWER UPGRADES

CBJ CONTRACT No. BE22-185
CITY & BOROUGH OF JUNEAU, ALASKA

UTILITY PLAN VIEW

DATE Dec 07, 2021
PDC No 21285JN

SHEET
C203

N:\Projects\21285JN\CBJ_BRH_AWSC\Civil\Drawings\21285JN.dwg, PLOT: December 07, 2021 at 10:43am

SPECIAL PROVISIONS

1.0 GENERAL AND ADMINISTRATION

1.1 The PERMITTEE shall have a copy of this permit at the work site at all times.

1.2 The permit, together with these Special Provisions shall take precedence over any additional plans, exhibits, attachments, and/or schedules should discrepancies appear.

1.3 All contact between the Department and the PERMITTEE's Contractor shall be through a representative of the PERMITTEE. If the PERMITTEE chooses to perform the work with other than its own forces, a representative of the utility shall be present at all times unless otherwise agreed to by the DEPARTMENT. Failure to comply with this provision is grounds for restricting any further work by the PERMITTEE in the DEPARTMENT's Right of Way.

1.4 Any rights granted by this permit may not be assigned or transferred to another entity without prior written approval from the DEPARTMENT. If the utility is sold to another utility or merges with another utility, the new utility shall inform the DEPARTMENT in writing within 30 days after the date of transaction.

1.5 Any request for waiver or exception of Special Provision(s), or any request for change in location, alignment, or construction method, shall be submitted in writing to the Regional Utilities Engineer.

1.6 The PERMITTEE agrees to furnish the DEPARTMENT with a set of as built plans within sixty (60) days from the completion of the work covered by this Permit.

1.7 The PERMITTEE agrees to provide design locates, at no cost to the DEPARTMENT, upon request. If a utility locate service is not available, reference markers shall be installed and maintained at both ends of underground highway crossings, and at angle points in the alignment of the underground Facility. Where utilities are attached to a bridge, the PERMITTEE will attach a plate on the conduit at each abutment describing the content of the pipe or conductor, and the name and phone number of the owning utility.

1.8 The Regional Utilities Engineer may assign an inspector or inspectors in order to insure compliance with the provisions of this utility permit. The inspector has the authority to suspend all work in the event of noncompliance.

1.9 The PERMITTEE agrees to reimburse the DEPARTMENT for actual costs of inspections during construction of the Facility. Inspection activities will include on-site review of traffic control, highway crossings, and restoration of the right of way. Inspection may also include any testing required to verify conformance to the DEPARTMENT's standards, and responding to questions and/or complaints from the public or agencies. Actual direct and indirect charges shall provide the basis for billings, which include wages, benefits, per diem, travel and vehicle expenses, and lodging.

1.10 This permit will expire if construction or installation of the Facility has not started within one year after the date of approval, unless the PERMITTEE obtains an extension of time in writing from the DEPARTMENT.

2.0 COORDINATION

2.1 The PERMITTEE shall notify the DEPARTMENT's Regional Utility Permit Officer ten (10) days prior to beginning work:

Southcoast Region
(907)465-4544

2. 2 The PERMITTEE agrees to coordinate their work with other projects, both public and private that may occur within the project limits covered by this permit. The PERMITTEE agrees not to interfere or hinder the work being performed by other contractors.

2. 3 The PERMITTEE shall coordinate and obtain the necessary temporary driveway permits for access to travel way from haul routes or staging areas where existing access does not exist. Contact the DEPARTMENT's Right-Of-Way Section at (907) 465-4499 for the driveway permit application or apply on line at www.dot.state.ak.us/permits

3.0 ENVIRONMENTAL

3.1 The PERMITTEE is responsible for obtaining authorization from the U.S. Army Corps of Engineers for any ground disturbing activities in areas designated as wetlands.

3.2 If the PERMITTEE, its Contractor, or Agent discovers environmental contamination in the right-of-way while constructing the Facility, they shall immediately stop work and notify the DEPARTMENT's Regional Utility Engineer.

3.3 The PERMITTEE is not responsible for the cost of investigation, cleanup, or disposal of any contaminated soils it discovers during work on the Facility within the DEPARTMENT's right-of-way, **unless:**

a. The PERMITTEE, its Contractor, or Agent fails to immediately notify the DEPARTMENT of the contamination, or;

b. The contamination is attributed to the PERMITTEE's Facility, or actions of the PERMITTEE, its Contractors, or its Agents.

3.4 If the PERMITTEE, its Contractor, or Agent discovers cultural, historic or archeological resources as a result of ground altering activities, all work that would disturb these resources shall be stopped and the State Historic Preservation Office shall be contacted immediately at (907) 269-8721.

3.5 The PERMITTEE shall not hold the DEPARTMENT responsible for any delay, redesign, rerouting, or additional cost due to encountering environmental contamination, or cultural, historic, or archeological resources.

3.6 The PERMITTEE shall provide an Alaska Certified Erosion and Sediment Control Lead (AK-CESCL) trained person, with the authority to direct activities required by the SWPPP, APDES permit or other permit conditions, during all construction and maintenance activities authorized by this permit that involve ground disturbing activities. Provide proof of current AK-CESCL certification upon request.

3.7 The PERMITTEE, on behalf of itself and its contractors, officers, officials, employees, and agents, shall indemnify, hold harmless, and defend at its sole cost and expense, the DEPARTMENT, its contractors, officers, officials, employees, and agents from any and all fines, costs, claims, damages, liquidated damages, judgments, or civil penalties assessed by the DEPARTMENT of Environmental Conservation pursuant to AS 46.03.760(E), arising wholly or in part from any action taken by the PERMITTEE in relation to the PERMITTEE's Facilities on DEPARTMENT rights of way or other permitted locations. This indemnification provision is in addition to and shall be construed as consistent with General Provision M.

4.0 NOTIFICATIONS

4.1 The PERMITTEE is responsible for notifying businesses and residents that front the project of scheduled road and driveway closures, or any work that may affect them. Property owners shall receive the notices a minimum of 48 hours prior to commencement of the work. Notices shall include a detailed description and map of the project, anticipated construction schedule and contact name and number of a representative of the PERMITTEE.

4.2 The PERMITTEE shall submit weekly public information notices that identify road closures, restrictions to traffic, and detours. Coordinate this effort with the State DOT/PF Navigator Information Program.

5.0 TRAFFIC CONTROL

5.1 The PERMITTEE shall submit a Traffic Control Plan (TCP) to the DEPARTMENT for approval a minimum of ten (10) days before beginning construction.

5.2 The PERMITTEE or the PERMITTEE's contractor shall designate a Traffic Safety Supervisor who shall be responsible for the maintenance of traffic operations on a 24-hour basis. This individual shall have received formal work zone traffic control training. The DEPARTMENT must be supplied with the name of this individual along with written verification of his/her credentials as well as a 24-hour telephone number where he/she can be reached.

5.3 The PERMITTEE shall insure that flagmen are certified by either the International Municipal Signal Association (IMSA) or the American Traffic Services Association (ATSSA). Documentation of certification shall be provided if requested.

5.4 The PERMITTEE shall provide traffic control devices, conforming to the latest addition of the Manual on Uniform Traffic Control Devices published by the U.S. DEPARTMENT of Transportation and Alaska Traffic Manual Supplement while constructing the Facility, or thereafter performing routine maintenance.

5.5 All traffic control devices required by the approved Traffic Control Plan, including signs, barricade, and flagmen, shall be in place prior to beginning work within the right of way.

5.6 The PERMITTEE shall remove or cover all temporary traffic control devices as soon as practical when they are no longer needed or when work on the Facility is suspended for short periods of time.

5.7 The PERMITTEE shall not park vehicles, equipment, or store materials on road or pathway surfaces at any time, unless specifically allowed by the traffic control plan.

5.8 At the close of each work day the construction site on non-detoured roadways shall be restored to a condition that allows two-way traffic to flow in conformance with the normal traffic patterns in that area, unless otherwise approved by the Regional Utilities Engineer.

5.9 The PERMITTEE shall conduct periodic inspections of temporary traffic control devices left in place during non-working hours. A 24 hour telephone contact number for the traffic control supervisor shall be provided to the local State Troopers or Police Departments.

5. 10 All illumination and signalization shall remain operational during the construction of the Facility.

5.11 Reduced speed and two-way traffic shall be maintained on non-detoured roadways between the peak traffic hours of 7:30 a.m. to 9:00 a.m. and from 4:30 p.m. to 5:30 p.m.

6.0 EXCAVATION AND BACKFILL

6.1 The PERMITTEE shall backfill and compact all trenches within road prisms and pathways in 6-inch lifts or as accepted by the DEPARTMENT. 6-inch lifts are required if no inspector is present. The backfill shall be of suitable non-frost susceptible, non-organic material (0-6% passing No. 200 sieve). All excavated non-acceptable material shall be removed from the State right-of-way or property by the PERMITTEE.

6.2 The road prism is defined to include the finished roadway surface and underlying structural layers out to, and including, any unpaved shoulders, curbs, and attached pathways.

6.3 The PERMITTEE shall compact all trenches within or crossing road prisms and pathways at a minimum of 95% of the optimum density. All compaction tests shall be at the PERMITTEE's expense. A copy of each test will be submitted to the DEPARTMENT.

6.4 The PERMITTEE shall backfill all trenches, bore pits, and other excavations located outside road and pathway prisms with clean, non-organic, and compactable material meeting the requirements of Select Material, Type C, as defined in the DEPARTMENT's Standard Specifications for Highway Construction. Existing material is acceptable as backfill provided it meets the requirements of Select Material, Type C.

6.5 The PERMITTEE shall remove material not suitable for use as backfill from the site, t. The PERMITTEE shall replace unsuitable backfill material with imported material meeting the requirements of Select Material, Type C.

6.6 All backfill shall be compacted to existing undisturbed soil densities or better, and graded to blend with the existing ground surface. All costs associated with removal of unusable material and placement of import material is the responsibility of the PERMITTEE.

6.7 The top six (6) inches of the road surface or surface under pavement shall be crushed aggregate D-1

7.0 PAVEMENT REPLACEMENT AND TRAFFIC MARKINGS

7.1 Pavement cuts may be authorized from May 1st to September 30th and will only be permitted on an emergency basis from October 1st through April 30th unless the Regional Utilities Engineer approves a request for exception. Planned pavement cuts must be repaired by September 30th. No more than 2500 feet of pavement by project stationing can be disturbed without final repair

7.2 All asphalt cuts shall be permanently repaired with hot asphalt. Asphalt concrete pavement shall be Type II, Class B installed in conformance with Section 401 of the Alaska DOT&PF Southcoast Region Special Specifications dated 2017. The proposed job mix design shall be submitted for review and approval by the DEPARTMENT.

7.3 If the edge of the pavement is damaged during this construction the PERMITTEE shall have his contractor replace the pavement to the centerline of the roadway at least 10 feet each side of the damaged area. If the damage is intermittent and less than 50 feet between damaged areas the PERMITTEE shall make the repair continuous to cover the damage.

7.4 For service crossings, pre-saw the area to be excavated. After completion of the utility, saw back the existing pavement a minimum of 1-1/2' over undisturbed earth on each side of the trench. Install 6" of asphalt installation hot mix which shall be spread and compacted in layers. The top layer shall not exceed a 2" compacted depth. Paint the entire area of all top-lift longitudinal joints with a thick band of polymerized bituminous joint adhesive prior to placement the abutting lanes. The modified joint adhesive materials shall be Pavement Joint Adhesive that meets Table 702-2 of Alaska Standard Specifications for Highway Construction 2017 edition. The temperatures and application method of the joint adhesive shall be per manufacturer's recommendations.

7.5 For lane replacement, pre-saw the area of pavement effected by the utility installation. Cut the pavement so that the edges are vertical, the sides are parallel and the ends are perpendicular to the direction of traffic. The depth of pavement to be replaced will match the depth of the existing pavement unless otherwise specified. The pavement will be spread in layers not to exceed 2" to the seam nearest the centerline of the roadway. Paint the entire area of all top-lift longitudinal joints with a 1/8" thick band of polymerized bituminous joint adhesive prior to placement the abutting lanes. The modified joint adhesive materials shall be Crafco Pavement Joint Adhesive No. 34524, or an approved equal. The temperatures and application method of the joint adhesive shall be per manufacturer's recommendations.

7.6 If the contract quantity is less than 1500 tons, the asphalt concrete pavement will be accepted based upon the DEPARTMENT's material engineers approval of the job mix design and the placement and compaction of the asphalt concrete to the specified depth and finished surface requirements and tolerances. The material engineer's approval of the job mix design does not relieve the PERMITTEE or their contractor from the responsibility to produce the approved mix and is subject to field verification testing for oil content, density and gradation. The gradation, density and asphalt content shall be determined in accordance with section 410-4.02. If a calibrated nuclear content gauge is not available, asphalt content of the mix may be determined by extraction in accordance with AASHTO T-164. A minimum of two tests shall be taken for each approved mix design or as designated by the material engineer.

7.7 The finished pavement surface will be tested after final rolling at selected locations using a 16-foot straightedge. Variations of more than 3/16 inch from the testing edge between any two contacts will be corrected.

7.8 Temporary Patches

a. A Polymer modified cold mix asphalt or concrete patch may be used as a temporary patch subject to written approval of the Regional Utilities Engineer. The temporary patch will be replaced as soon as hot asphalt is available. For crossings, saw back existing pavement a minimum of 1' over undisturbed earth on each side of the trench. Paint edges with STE-1 tack coat and install 4" of polymer-modified cold asphalt. Damage to the pavement surface at locations other than crossings will be repaired by replacement of asphalt to the seam nearest centerline of the roadway with 4" of polymer-modified cold asphalt. All edges are to be saw cut and painted with STE-1 tack coat. The polymer-modified cold asphalt shall be spread and compacted in 2" lifts, each compacted to a minimum of 94% of maximum density. Asphalt patch density shall be field controlled utilizing a calibrated nuclear densometer at two locations per patch. Field testing results shall be certified by a registered engineer and forwarded to DOT&PF.

b. Temporary concrete patches shall be a minimum of 6" thick with heavy micro/macro synthetic fiber reinforcement additive or equal. Concrete shall be Class A, six sack mix, with a slump range of 2"- 4.8"

7.9 Asphalt concrete mixture that becomes contaminated with foreign material, is segregated or is in any way determined to be defective will be removed. Defective materials will be removed for the full thickness of the course.

7.10 The PERMITTEE shall replace all damaged or removed pavement markings in kind.

8.0 DRAINAGE

8.1 The PERMITTEE shall be responsible for assuring that all water entering the DEPARTMENT's storm drain facility meets the minimum criteria for water quality standards as set forth in the Alaska Administrative Code(18 AAC 70.010-.110).

8.2 The PERMITTEE shall maintain existing drainage patterns during construction of the Facility. Ditches will be restored to the originally designed flow lines unless otherwise agreed to by the DEPARTMENT.

8.3 The PERMITTEE shall be responsible for all erosion control prior to slopes becoming stabilized.

8.4 The PERMITTEE is responsible for installing and maintaining BMPs required by the NDPES permit throughout the duration of the project.

8.5 The PERMITTEE shall notify the DEPARTMENT of Transportation of drainage problems caused by the work under this Permit and will remedy the problem as directed by the DEPARTMENT of Transportation.

8.6 The PERMITTEE shall replace all culverts damaged by work under this Permit with a culvert. of the same size, or 18-inch, whichever is greater.

9.0 RIGHT OF WAY PROTECTION, MAINTENANCE, AND RESTORATION

11.1 The PERMITTEE shall cleanup within one day behind installation of the facility. The PERMITTEE will not be allowed to trench or plow more than can be cleaned up the following day.

11.2 The PERMITTEE or their contractor shall immediately repair any damage of existing utilities, storm drainage or other highway structures caused as a result of construction authorized by this permit.

11.3 Heavy tracked equipment operation will not be permitted on a paved roadway or shoulder, unless approved in writing by the Regional Utilities Engineer. If approved, planking or rubber tires shall be utilized between the vehicle tracks and the pavement. The PERMITTEE shall repair damage to the pavement as a result equipment operation as directed by the DEPARTMENT.

11.4 The PERMITTEE or his contractor will be responsible for winter and spring maintenance of the road shoulders, ditch lines, backslopes, road surfaces, taxiways, and runways that have not been left in a neat and clean condition, satisfactory to the Maintenance Section of the DEPARTMENT.

11.5 The PERMITTEE shall dispose of trees, brush or other natural growth by mechanical chipping or hauling away. Stumps and grubbing piles shall be loaded and hauled to a disposal site outside the DEPARTMENT's right of way. Trees left for the public shall be limbed and stacked in a location where loading does not interfere with the safe operation of the travel way.

11.6 Guardrail that is removed or damaged during construction shall be replaced in accordance with Section 606 AKDOT&PF Standard Specifications dated 2017, and Standard Drawings Manual.

11.7 Any Survey monument or monument accessory that will be disturbed or destroyed during construction of the Facility shall be referenced prior to beginning work, and restored or replaced by a Registered Land Surveyor licensed in accordance with AS 34.65.040. All monument records shall be reviewed by the DEPARTMENT prior to filing with the District Recorder.

11.8 Highway signs that are in conflict with construction shall be relocated on a temporary basis and reinstalled at the original location as soon as possible. Signs that are damaged during construction shall be replaced in kind to the DEPARTMENT's standards, and at no cost to the DEPARTMENT.

11.9 The PERMITTEE shall replace all curbs and gutters to an existing undisturbed joint.

11.10 The PERMITTEE shall maintain all roadways, pedestrian and bicycle facilities affected by the pavement removal in a smooth and passable condition at all times.

11.11 The PERMITTEE shall provide street sweeping to keep free of loose material all paved portions of the roadway and haul routes open to the public, including sections of roadway off the project where your operations have deposited loose material. Use a street sweeper that can collect materials rather than eject them on the shoulder of the road.

11.12 The PERMITTEE shall furnish, haul, and place water for dust control and pavement flushing. Use water trucks that can provide a high-pressure water stream to flush the pavement and a light-water spray to control dust. If the flushing operations contaminate or fill adjacent catch basins, clean and restore them to their original condition. Pavement flushing and dust control is required in sections off the project where flushing is required.

11.13 Upon completion of the work within the State right-of-way or State property, the PERMITTEE shall remove all equipment, dispose of all waste material and shall leave the premises in a neat and clean condition satisfactory to the DEPARTMENT.

10.0 TOPSOIL AND SEEDING

10.1 The PERMITTEE shall replace and restore all vegetation disturbed. Unless otherwise required, re-vegetation shall consist of establishing seeded grassed slopes over the disturbed ground. The PERMITTEE shall use all means necessary to maintain and protect the disturbed slopes from erosion until such time as the vegetation is established.

10.2 The PERMITTEE shall replace any topsoil lost as a result of construction under this permit.

10.3 The PERMITTEE shall re-seed all areas within the DEPARTMENT's right-of-way disturbed by work under this permit with a seed mix approved by the DEPARTMENT.

10.4 The PERMITTEE shall re-grade all disturbed areas to blend with the existing ground surface and re-seed after completing backfill of pipe.

10.5 If re-seeding is not complete by August 15th, then re-shaping of all disturbed areas shall be completed by July 1st of the following year. The PERMITTEE is responsible for all erosion control measures and cleaning of ditches and culverts.

11.0 OVERHEAD FACILITIES

11.1 New and relocated aerial facilities shall maintain a minimum vertical clearance of twenty feet (20') in all locations within the right of way. (17 AAC 15.201)

11.2 The PERMITTEE shall install guy guards on all down guys installed within the right of way.

11.3 The PERMITTEE shall remove all overhead lines abandoned as the result of this Permit.

11.4 Guy/Anchor attachment shall not be located within clear zone.

.12.0 UNDERGROUND FACILITIES

12.1 The depth of burial for underground facilities constructed or installed under pavement, roadway or runway surfaces must be at least four feet measured from the surface of the pavement to the top of the cable, conduit, pipeline or encasement.

12.2 Underground facilities constructed under other surfaces, including unlined ditches must be buried at least three feet, measured in any direction from the surface to the top of the cable, conduit, pipeline or encasement.

12.3 The PERMITTEE shall place buried caution tape one foot directly above the FACILITY being installed.

12.4 The PERMITTEE shall obtain locates for any existing traffic signals, traffic interconnect cables, street light facilities, or FAA cables prior to construction. Damages shall be repaired and restored to working order within eight hours at the PERMITTEE's expense. Any splice must be located within a Type IA Junction Box or as directed by the DEPARTMENT.

13.0 WARRANTY

13.1 Warrant and Warranty, for the purposes of this Permit, shall mean the DEPARTMENT's concurrence block authority on any warranty release issued by the PERMITTEE.

13.2 The PERMITTEE shall warrant the materials and workmanship of the road, and road right-of-way, to ensure completion of the construction, including the restoration of surfacing, slopes, slope treatment, drainage facilities, pathways, and right-of-way cleanup for the warranty period.

13.3 The DEPARTMENT will notify the PERMITTEE of any surface deformity. The PERMITTEE shall prepare a corrective action plan for review and approval by the DEPARTMENT. The corrective action plan shall include:

a) A methodology to determine if the pavement surface deformation is due to subsurface forces, such as subsidence or drainage, and;

b) A proposal for correcting the surface variation.

13.4 The PERMITTEE shall remedy promptly, without cost to the DEPARTMENT, any and all defects in materials and workmanship resulting from defective materials and workmanship. If the defect, in the opinion of the DEPARTMENT, is of such a nature as to demand immediate repair, the DEPARTMENT shall have the right to take corrective action and the cost thereof shall be borne by the PERMITTEE.

13.5 The PERMITTEE or his designee and the DEPARTMENT shall perform construction inspection of the road. The PERMITTEE or his designee shall handle any coordination with respect to inspection activities involving both the DEPARTMENT and PERMITTEE.

13.6 The Warranty period shall mean a period of two (2) years from the acceptance of the road. The Warranty shall remain in effect until final inspection and acceptance by the DEPARTMENT.

14.0 RELEASE OF WARRANTY

14.1 The PERMITTEE and the DEPARTMENT shall perform an inspection prior to the end of the warranty period. The PERMITTEE or his designee is responsible to schedule and coordinate with the DEPARTMENT the final warranty inspection. The PERMITTEE shall correct any defect in the work revealed by the warranty inspection.

14.2 Upon the PERMITTEE's satisfactory performance of all its obligations under this Permit, the DEPARTMENT shall execute a written statement acknowledging performance and release of the warranty obligations. Release of the warranty shall not release the PERMITTEE of all other provisions of the permit.

14.3 Any damage to the roadway prism, fill slopes, ditches, backslopes, structures or underground utilities determined to be a result of work authorized by this permit that becomes apparent within two (2) years after project completion and acceptance by the DEPARTMENT shall be repaired by the PERMITTEE.

15.0 MAINTENANCE AND OPERATIONS

15.1 The PERMITTEE shall perform routine maintenance on the utility fACILITY on a continuing basis. Routine maintenance may be performed without prior notification of the DEPARTMENT however closure of a highway, pedestrian facility, pathway, sidewalk or creating a detour to perform routine maintenance must be specifically authorized by permit. The PERMITTEE shall apply for an annual lane closure permit to cover routine maintenance operations. Prior authorization must be obtained from the DEPARTMENT before performing any maintenance that requires excavation, plowing, jacking or boring within the right of way.

15.2 The PERMITTEE may perform emergency maintenance without prior notice to the DEPARTMENT as long as appropriate traffic control is established and maintained. If the project requires major reconstruction and or placement of traffic control devices for an extended period a lane closure permit is required. If the road surface is affected by the emergency maintenance, contact the local maintenance foreman as soon as possible and place pavement break warning signs in advance of the site until such time as the pavement has been repaired.

15.3 The PERMITTEE is responsible for maintenance and adjustment of manhole frames, valve boxes, junction boxes or other structures located in the pavement or sidewalk.

15.4 The PERMITTEE shall apply for a new utility permit if the facility authorized by this permit is to be reconstructed or modified substantially. If the proposed modifications are not substantial, the PERMITTEE need only apply for an amended permit. A utility permit application is required for all new service connections.

In consideration of the benefits accruing to the Permittee by reasons of the foregoing agreement, this permit is hereby accepted by the Permittee and the Permittee hereby agrees to comply with all of the terms, provisions, conditions, stipulations therein contained. Dated this 29 day of December, 20 21

****

City & Borough of Juneau
155 South Seward Street
Juneau AK 99801

By: _____

Title: PROJECT MANAGER

Attest: J Mark Pusich

Title: CIVIL ENGINEER

****

ACKNOWLEDGEMENT OF
COMPANY OR PERMITTEE

STATE OF ALASKA)
1st JUDICIAL DISTRICT) ss

BE IT REMEMBERED that on this 29 day of Dec, 20 21, before me the undersigned, a Notary Public of the State of Alaska, personally appeared

John Nelson

And to me personally known and known to me to be the identical individuals named in and who executed the foregoing permit, and acknowledged the said instrument to be the free and voluntary act and deed of the above named company for the uses and purposes therein expressed and on oath stated that they were authorized to execute said instrument.

IN WITNESS WHEREOF, I have hereunto set my hand and affixed the seal of my office the day and year first above written.

My Commission Expires: 2/18/2024

Carole Bullman

A Notary Public

****

The State of Alaska, acting by and through its Department of Transportation and Public Facilities has caused this Utility Permit to be executed on this 3 day of Jan, 20 22

****

STATE OF ALASKA
DEPARTMENT OF TRANSPORTATION
AND PUBLIC FACILITIES

Southcoast Region

By: _____

Title: Regional Utility Engineer

****

STATE OF ALASKA
OFFICIAL SEAL
Carole Bullman
NOTARY PUBLIC
My Commission Expires 02/18/2024

SECTION 00853 – STANDARD DETAILS

PART 1 - GENERAL

1.1 STANDARD DETAILS

A. Whenever references are made to the Standard Drawings or Standard Details in these Plans or Specifications, the intent is to refer to the current City and Borough of Juneau Standard Details (currently the 4th Edition dated August 2011), copies of which may be purchased from the CBJ Engineering Department.

B. City and Borough of Juneau Standard Details which specifically apply to this Project include but are not limited to the following:

STANDARD DETAIL NO.	NAME OF DETAIL
125	PAVEMENT RESURFACING AND TRENCH DETAIL
203	SANITARY SEWER MANHOLE TYPES I & II
205	MANHOLE HEIGHTS
206A	STANDARD MANHOLE COVER & FRAME
209	MANHOLE CONNECTION DETAILS
213	SANITARY SEWER SERVICE LATERAL
215	SANITARY SEWER CROSSING
218	COUPLING FOR DISSIMILAR SANITARY SEWER PIPES
403	FIRE HYDRANT
404	HYDRANT GUARD POSTS
405	HYDRANT PAD
407	MAINLINE VALVE
412	RIGID INSULATION
414A	DOWNWARD CONCAVE THRUST BLOCK
414B	HORIZONTAL AND CONCAVE UPWARD THRUST BLOCK

PART 2 – PRODUCTS (Not Used)

PART 3 – EXECUTION (Not Used)

END OF SECTION

SPECIAL PROVISIONS

The Standard Specifications for Civil Engineering Projects and Subdivision Improvements December 2003 Edition, with sixteen (16) Errata Sheets, as published by the City and Borough of Juneau, is part of these Contract Documents and shall pertain to all phases of the contract. The Standard Specifications for Civil Engineering Projects and Subdivision Improvements December 2003 Edition is available for a fee from the City and Borough of Juneau Engineering Contracts Office, (907) 586-0800, or you may view them online at: www.juneau.org/engineering.

Special Provisions – Table of Contents

Section No.	Section Title	Page No.
01010	Summary of Work	2
01025	Measurement and Payment	5
01550	Site Access and Storage	20
01570	Erosion and Sediment Control	20
01700	Project Close-Out	22
02202	Excavation and Embankment	27
02203	Trenching	27
02204	Base Course	27
02401	Sanitary Sewer Pipe	27
02402	Sanitary Sewer Manholes and Cleanouts	28
02501	Storm Sewer Pipe	28
02601	Water Pipe	28
02602	Valves	30
02605	Water Services	30
02702	Construction Surveying	30
02709	Topsoil	30
02716	Storm and Sanitary Sewer Pipe Removal and Water Pipe Slurry	31
02722	Utility Conflict Relocation	32
02801	Asphalt Concrete Pavement	33

***Add** the following Section*:

SECTION 01010 - SUMMARY OF WORK

PART 1 - GENERAL

1.1 GENERAL

A. The WORK to be performed under this contract shall consist of furnishing all plant, tools, equipment, materials, supplies, manufactured articles and furnishing all labor, transportation and services, including all fuel, power, water and essential communications and performing all WORK, or other operations required for the fulfillment of the contract in strict accordance with the Contract Documents. The WORK shall be complete, and all WORK, materials, and services, not expressly indicated or called for in the Contract Documents which may be necessary for the complete and proper construction of the WORK in good faith shall be provided by the CONTRACTOR as though originally so indicated, at no increase in cost to the OWNER.

1.2 WORK COVERED BY CONTRACT DOCUMENTS

A. The WORK covered in the Contract Documents includes baes course grading D-1, removal and replacement of sanitary sewer manholes with fiberglass baes liner, removal and replacement of sanitary sewer pipe, installation of sanitary sewer service pipe and cleanouts, installation of 16" HDPE water main, installation of 16" butterfly valves, temporary water system, filling existing water main with slurry, installation of fire hydrant assembly, removal of fire hydrant assembly, 6-Inch water service to Bartlett House, asphalt pavement removal and replacement, chain link fence removal and resetting, topsoil and seeding, construction surveying, traffic control and other miscellaneous related WORK.

B. The 16" HDPE water line connection WORK on Hospital Drive and Salmon Creek Access Road including 2-Inch AEL&P water service must be completed and accepted by the week of May 16, 2022 or the week of May 23, 2022. All other WORK on the project must be completed by July 1, 2022.

C. SITE OF WORK. The site of the WORK includes the eastern most section of Hospital Drive on the Bartlett Regional Hospital campus and extends south to the Salmon Creek Trail Access Road in Juneau, Alaska.

1.3 WORK BY OTHERS

A. The CONTRACTOR's attention is directed to the fact that work may be conducted at the site by other contractors during the performance of the WORK under this contract. There are multiple CBJ construction projects taking place in the Bartlett Regional Hospital area. CBJ Bartlett Regional Hospital Behavioral Health Facility, CBJ Project No. BE21-149 is currently under construction with Dawson Construction the general contractor. Substantial completion for this project is scheduled for September 17, 2022. CBJ Bartlett Regional Hospital Site Improvements, CBJ Contract No. BE21-164 is currently in winter shut down mode but work scheduled to resume in Spring 2022 on Hospital Drive Phase 2 of the improvements. Admiralty Construction is the general contractor. The

CONTRACTOR shall conduct its operations so as to cause a minimum of interference with the WORK of such other contractors and shall cooperate fully with such contractors to provide continued safe access to their respective portions of the site, as required to perform work under their respective contracts.

B. Interference with Work on Utilities. The CONTRACTOR shall cooperate fully with all utility forces of the OWNER or private agencies engaged in the relocation, altering, or otherwise rearranging of any facilities which interfere with the progress of the WORK, and shall schedule the WORK so as to minimize interference with said relocation, altering, or other rearranging of facilities.

1.4 CONTRACTOR USE OF PROJECT SITE

A. The CONTRACTOR's use of the Project site shall include construction operations and storage of materials, fabrication facilities, and field offices only in those areas identified on the Drawings. The CONTRACTOR will have to coordinate with Dawson Construction to determine which areas of the Bartlett Regional Hospital Behavioral Health Facility project site can be used for materials and equipment storage areas.

1.5 OWNER USE OF THE PROJECT SITE

A. The OWNER may utilize all or part of the existing site during the entire period of construction for the conduct of the OWNER's normal operations. The CONTRACTOR shall cooperate and coordinate with the ENGINEER to facilitate the OWNER's operations and to minimize interference with the CONTRACTOR's operation at the same time. In any event, the OWNER shall be allowed access to the Project site during the period of construction.

1.6 PROJECT MEETINGS

A. Pre-Construction Conference

1. Prior to the commencement of WORK at the site, a Pre-Construction Conference will be held at a mutually agreed time and place which shall be attended by the CONTRACTOR's Project Manager, its superintendent, and its Subcontractors as the CONTRACTOR deems appropriate. Other attendants will be:

    a. ENGINEER and Inspector.
    b. Representatives of OWNER.
    c. Governmental representatives as appropriate.
    d. Others as requested by CONTRACTOR, OWNER, or ENGINEER.

2. Within 14 Days after the date of commencement as stated in the Notice to Proceed, the CONTRACTOR shall submit the following items to the ENGINEER to review. The ENGINEER will need a minimum of 7 Days to review the submittals prior o meeting for the Pre-Construction Conference. The Pre-Construction Conference will not be held unless these items have been submitted.

    a. Plan of Operation/Project Overview.

b. A "Project Schedule" in Critical Path Method (CPM), Gnatt, or Bar Chart Schedule format acceptable to the ENGINEER that details all mobilization/demobilization, major work phases, periods of planned shutdowns, working and non-working days, and physical WORK activities that will occur on-site. Approval of the Project Schedule is required prior to commencing on-site WORK activities.
c. Traffic Control Plan and CBJ Right-of-Way permit application.
d. Traffic Control Personnel Certifications.

3. Unless previously submitted to the ENGINEER, the CONTRACTOR shall bring to the Pre-Construction Conference one copy each of the following:

a. Procurement schedule of major equipment, materials and items requiring a long lead time.
b. Shop Drawings/Samples/Substitute or "Or Equal" submittal schedule.
c. Name and telephone number of CONTRACTOR's Project Supervisor.
d. Erosion Control Plan with Storm Water Pollution Prevention Plan (SWPPP) and Notice of Intent as filed with ADEC (if applicable).
e. Certified BMP Plan for Excavation Dewatering and Notice of Intent as field with ADEC (if applicable).

4. The purpose of the Pre-Construction Conference is to designate responsible personnel and establish a working relationship. Matters requiring coordination will be discussed and procedure for handling such matters established. The complete agenda will be furnished to the CONTRACTOR prior to the meeting date. The CONTRACTOR should be prepared to discuss all the items listed below:

a. Status of CONTRACTOR's insurance and bonds.
b. CONTRACTOR's tentative construction schedules.
c. Transmittal, review, and distribution of CONTRACTOR's submittals.
d. Processing applications for payment.
e. Maintaining record documents.
f. Critical WORK sequencing and long lead items.
g. Field decisions and Change Orders.
h. Use of Project site, office and storage areas, security, housekeeping, and OWNER's needs.
i. Major equipment deliveries and priorities.
j. CONTRACTOR's assignments for safety and first aid.

5. The OWNER will preside at the Pre-Construction Conference and will arrange for keeping and distributing the minutes to all persons in attendance.

6. The CONTRACTOR and its Subcontractors should plan on the conference taking no longer than three hours. Items listed in paragraph 3 will be covered as well as a review of the Drawings and Specifications with the ENGINEER and OWNER.

B. Progress Meetings

1. The CONTRACTOR shall schedule and hold regular on-site progress meetings at least weekly and at other times as requested by the ENGINEER, or as required by the progress of the WORK. The CONTRACTOR, ENGINEER, and all Subcontractors active on the site must attend each meeting. CONTRACTOR may at its discretion request attendance by representatives of its Suppliers, manufacturers, and other Subcontractors.
2. The ENGINEER shall conduct the meeting and will arrange for recording and distributing the minutes. The purpose of the meetings will be to review the progress of the WORK, maintain coordination of efforts, discuss changes in scheduling, and resolve other problems which may develop. During each meeting, the CONTRACTOR is required to present any issues which may impact the WORK, with a view toward resolving these issues expeditiously.

1.7 DEFINITIONS APPLICABLE TO TECHNICAL SPECIFICATIONS

A. The following words have the meaning defined in the Technical Portions of the WORK:

1. **Furnish** - means to supply and deliver to the site, to unload and unpack ready for assembly, installation, testing, and start-up.
2. **Indicated** - is a word used to direct the CONTRACTOR to information contained on the drawings or in the Specifications. Terms such as “shown”, “noted”,” “scheduled”, and “specified” also may be used to assist in locating information but no limitation of location is implied or intended.
3. **Install** - defines operations at the site including assembly, erection, placing, anchoring, applying, shaping to dimension, finishing, curing, protecting, and cleaning, ready for the OWNER’s use.
4. **Installer** - a person or firm engaged by the CONTRACTOR or its subcontract, or any Subcontractor, for the performance of installation, erection, or application WORK at the site. Installers must be expert in the operations they are engaged to perform.
5. **Provide** - is defined as furnish and install, ready for the intended use.

PART 2 - PRODUCTS (Not Used)

PART 3 - EXECUTION (Not Used)

END OF SECTION

***Add** the following Section*:

SECTION 01025 – MEASUREMENT AND PAYMENT

PART 1 - GENERAL

1.1 SCOPE

A. Payment for the various items of the Bid Schedule, as further specified herein, shall include all compensation to be received by the CONTRACTOR for furnishing all tools, equipment, supplies, and manufactured articles, and for all labor, operations, and

incidentals appurtenant to the items for WORK being described, as necessary to complete the various items of the WORK all in accordance with the requirements of the Contract Documents, including all appurtenances thereto, and including all costs of permits and cost of compliance with the regulations of public agencies having jurisdiction, including Safety and Health Requirements of Occupational Safety and Health Administration of the U.S. Department of Labor (OSHA) and Occupational Safety and Health Standards of the Alaska Department of Labor, Division of Labor Standards and Safety.

B. No separate payment will be made for any Pay Item that is not specifically set forth in the Bid Schedule, and all costs therefore shall be included in the prices named in the Bid Schedule for the various appurtenant items of WORK.

C. In addition to the other incidental items of WORK listed elsewhere in the contract, the following items shall also be considered as incidental to other items of WORK under this contract:

1. Maintenance of all services through the Project area including power, water, storm and sanitary sewers, garbage pickup, mail delivery and emergency vehicles.
2. Traffic control, including flaggers, and installation and maintenance of traffic control devices in accordance with the Manual of Uniform Traffic Control Devices – Millennium Edition (MUTCD) and the current AKDOT&PF supplements.
3. Repair or replacement of existing adjacent facilities including piping, landscaping, steel, timber, concrete, and asphalt items, if damaged by the CONTRACTOR.
4. Final clean-up and site restoration.
5. All WORK necessary for coordination of work to be accomplished by the private utility companies and property owners within the Project limits.
6. Removal and replacement of survey monuments and markers disturbed during construction, whether shown on the Drawings or not.
7. All fittings for water and sanitary sewer pipes.
8. Watering of the roadway as necessary for dust control.
9. Crack sealing all sawcut pavement joints following paving operations.
10. All WORK related to dewatering including providing necessary pumps, temporary piping, sump drain rock, installing well points, sumps and French drains and other control measures to keep trench excavations for underground utilities and structures free of water.
11. Excavation and proof rolling on Salmon Creek Access Road to allow for new pavement depth section.
12. Sheeting, shoring, and bracing as required including any above ground utility poles and ground based utility pedestals.
13. Restoration and grading of all disturbed areas as necessary to provide a smooth transition to existing lot surfaces.
14. All WORK required to notify utility users of pending utility shutdowns.
15. All pavement saw cutting required for connections to existing asphalt pavement surfaces, concrete surfaces, and concrete curbs.
16. Furnishing and installing all temporary construction fencing necessary during construction.
17. Placement and compaction of useable excavation including restoration and grading of all disturbed areas as necessary to create a smooth transition to the existing surfaces adjacent the project.
18. All restrained joints required for water pipe.

19. All clearing and grubbing necessary on the project, including removal and disposal of trees and vegetation.

1.2 MOBILIZATION (Pay Item No. 1505.1) PRICE BASED ON LUMP SUM PAY UNIT

A. Measurement for payment for Mobilization will be based upon the completion of the entire WORK as a Lump Sum Pay Unit, complete, all in accordance with the requirements of the Contract Documents.

B. Payment for Mobilization will be made at the amount shown on the Bid Schedule under Pay Item No. 1505.1, which payment will constitute full compensation for all WORK described in Section 01505 - Mobilization, as shown on the Drawings and as directed by the ENGINEER.

C. Partial payments will be made as the WORK progresses as follows:

1. When 5% of the total original contract amount is earned from other Pay Items, 50% of the amount bid for Mobilization, or 5% of the original contract amount, whichever is lesser, will be paid.
2. When 10% of the total original contract amount is earned from other Pay Items, 100% of the amount bid for Mobilization, or 10% of the original contract amount, whichever is lesser, will be paid.
3. Upon completion of all WORK on the Project, payment of any amount bid for Mobilization in excess of 10% of the total contract amount will be paid.

1.3 TRAFFIC CONTROL (Pay Item No. 1550.1) PRICE BASED ON LUMP SUM PAY UNIT

A. Measurement for this Item will be made as a Lump Sum Pay Unit for completion of all Traffic Control in accordance with the Contract Documents.

B. WORK will include, but is not limited to, the preparation of a Traffic Control Plan (TCP) and implementation of all temporary traffic control plans and detours both within and adjacent to Hospital Drive, Salmon Creek Access Road and Egan Drive for motorists and pedestrians. Issuing public notifications and advertisements, coordination with CBJ emergency services, CBJ Capital Transit, AEL&P, Bartlett Regional Hospital, Wildflower Court, Rainforest Recovery, and Bartlett House is also included in this WORK.

C. This Pay Item includes furnishing, installing, and maintaining all traffic control devices, signs and other equipment in accordance with the Manual of Uniform Traffic Control Devices – 2009 Edition (MUTCD) as required in Section 01550, as shown on the Drawings and as indicated in the approved TCP documents.

D. Payment for Traffic Control will be made at the amount shown on the Bid Schedule under Pay Item No. 1550.1, which payment will constitute full compensation for all WORK described in Section 01550 – Site Access and Storage, as shown on the Drawings, and as directed by the ENGINEER.

1.4 EROSION AND SEDIMENT CONTROL (Pay Item No. 1570.1) PRICE BASED ON LUMP SUM PAY UNIT

A. Measurement for payment for Erosion and Sediment Control will be based upon the completion of the entire WORK as a Lump Sum Pay Unit, complete, all in accordance with the requirements of the Contract Documents.

B. WORK under this Pay Item includes all requirements described in Section 01570, including but not limited to all necessary permits for storm water control as required by Alaska Department of Environmental Conservation and the Environmental Protection Agency. This includes furnishing, installing, and maintaining all measures required by these permits.

C. Payment for Erosion and Sediment Control will be made at the Unit Price named in the Bid Schedule under Pay Item No. 1570.1, which payment will constitute full compensation for all WORK described in Section 01570 – Erosion Control, as shown on the Drawings and as directed by the ENGINEER.

2.1 SIDESLOPES AND DITCH GRADING (Pay Item No. 2202.1) PRICE BASED ON LUMP SUM PAY UNIT

A. Measurement for payment for Sideslopes and Ditch Grading will be based on the completion of the entire WORK as a Lump Sum Pay Unit, complete, including all excavation and placement of usable material from excavation into the sideslopes behind the utility trench disturbance limits, all in accordance with the requirements of the Contract Documents.

B. This Pay Item will include all WORK, including excavation, backfill with usable material from trench excavation, and all grading at the utility trench disturbance limits as necessary to construct smooth graded areas to the existing ground match lines, and other graded areas as shown on the Drawings and as directed by the ENGINEER.

C. Payment for Sideslopes and Ditch Grading will be made at the amount named in the Bid Schedule under Pay Item No. 2202.1, which will constitute full compensation for all WORK described in section 02202 – Excavation and Embankment, as shown on the Drawings and as directed by the ENGINEER.

2.2 ROAD CLEANING & MINING AREA RESTORATION GUARANTEE (Pay Item No. 2202.2) PRICE BASED ON CONTINGENT SUM PAY UNIT

A. Measurement for this Item will be made as a Contingent Sum Pay Unit for completion of Road Cleaning & Mining Restoration Guarantee.

B. The CONTRACTOR shall be responsible for removal of dirt, mud, rocks, and other debris from CBJ and State Right-of-Ways accumulated from the hauling and quarry operations to and from the project job site and also CBJ material source operations. It is the intent that the traveled public way be kept as clean (including dust) and to avoid unsafe traffic conditions. If the CONTRACTOR fails to perform necessary road cleaning in a timely manner, no later than the end of each day, the CBJ may hire outside forces to perform the WORK and deduct the cost from this contract, beginning with the funds remaining within this contingent sum pay item.

C. The CONTRACTOR shall execute a site specific *User Agreement*, which includes terms and conditions for mining and processing of material, with CBJ Engineering Department Material Sources Management prior to beginning operations in CBJ's Material Sources. The CONTRACTOR shall be responsible for restoration of their mining area in accordance with the conditions of the *User Agreement*. If the CONTRACTOR fails to perform the required mining area restoration, the CBJ may hire outside forces to perform the WORK and deduct the cost from this contract, beginning with the funds remaining within this contingent sum Pay Item.

D. Release of final payment for Mining Area Restoration and Road Cleaning Guarantee will be made upon determination of completeness by the ENGINEER after deduction of OWNER incurred costs for necessary road cleaning and/or mining area restoration not completed in a timely manner by the CONTRACTOR.

E. Payment for Mining Area Restoration and Road Cleaning Guarantee will be made at the amount named in the Bid Schedule under Pay Item No. 2202.2, less any deductions for Mining Area Restoration or Road Cleaning completed by CBJ or a third party on behalf of CBJ, payment of which will constitute full compensation for all WORK described in Section 02202 – Excavation and Embankment, as shown on the Drawings and as directed by the ENGINEER.

2.3 BASE COURSE, GRADING D-1 (Pay Item No. 2204.1) PRICE BASED ON QUANTITY, TON

A. Base Course Grading D-1 shall be measured by the ton delivered and placed in accordance with these Specifications. Said measurement may include moisture up to a maximum of 7.0% of dry weight of the material.

B. When check tests by the ENGINEER indicate that moisture content in excess of 7.0% may be occurring, the frequency of testing will be increased as necessary and the results averaged. When this average tested moisture content is greater than 7.0%, the tonnage, as measured over the period tested, shall be reduced by a percentage equal to the difference between the actual moisture content and 7.0%. No credit will be due the CONTRACTOR when moisture content is less than 7.0%. Samples for determination of moisture content shall be collected at the point of weighing.

C. Water needed for compaction and added to the base material on the grade will be considered incidental.

D. Payment for Base Course, Grading D-1, will be made at the Unit Price named in the Bid Schedule under Pay Item No. 2204.1, which payment will constitute full compensation for all WORK described in Section 02204 – Base Course, as shown on the Drawings and as directed by the ENGINEER.

2.4 LOCATE SANITARY SEWER SERVICES (Pay Item No. 2401.1) PRICE BASED ON QUANTITY, LUMP SUM PAY UNIT

A. Measurement and payment for Locate Sanitary Sewer Services will be based upon the completion of the entire WORK as a Lump Sum Pay Unit, complete, all in accordance with the requirements of the Contract Documents.

B. The WORK under this Pay Item includes all excavation and backfill, and other WORK necessary to determine the location of the existing sanitary sewer services for the Rainforest Recovery building prior to installation of the new sewer services. Elevation checks shall be made with existing water and storm drain piping to determine if pipe conflicts exist. If pipe conflicts exist, data shall be submitted to the ENGINEER so that a solution can be provided to the Contractor.

C. Payment for Locate Sanitary Sewer Services will be made at the Unit Price named in the Bid Schedule under Pay Item No. 2401.1, which payment will constitute full compensation for all WORK described in Section 02401 – Sanitary Sewer Pipe, as shown on the Drawings and as directed by the ENGINEER.

2.5 SANITARY SEWER PIPE, [ ]-INCH PVC (Pay Item Nos. 2401.2 and 2401.3) PRICE BASED ON QUANTITY, LINEAR FOOT

A. Sanitary Sewer Pipe will be measured along the slope of the pipe in feet, from center to center of manholes, from center of manholes to end of pipe, center to center of sewer cleanouts, or to limits of payment as shown on the Drawings. The aggregate laid lengths of wyes will not be deducted from lengths of pipes so measured.

B. This Pay Item includes the cutting, removing and replacing of existing 8” PVC and 4” PVC sewer pipe with new sewer pipe for connecting existing sewer pipe into new sewer manhole structures MH-1, MH-2 and MH-3 including LSS-1 clamp couplings and any other fittings or adapters as required to connect these sanitary sewer pipes to the new sewer manholes.

C. All trench excavation, bedding, backfill, dewatering, sheeting, shoring, bracing, imported backfill, warning tape, wye fittings, adapters, LSS-1 clamp couplers, bands, cleaning and testing, temporary sewer bypass, temporary sewer tie-ins at end of work shift and all other items necessary for a complete installation will not be measured for payment, but will be considered incidental to the WORK.

D. Connection of the existing Bartlett Behavioral Health facility 4” PVC sewer service to the new sanitary sewer pipe SP-2 with wye fitting will not be measured for payment, but will be considered incidental to the WORK.

E. Payment for Sanitary Sewer Pipe, 4-Inch PVC will be made at the Unit Price named in the Bid Schedule under Pay Item No. 2401.2, which payment will constitute full compensation for all WORK described in Section 2401 – Sanitary Sewer Pipe, as shown on the Drawings and as directed by the ENGINEER.

F. Payment for Sanitary Sewer Pipe, 8-Inch PVC will be made at the Unit Price named in the Bid Schedule under Pay Item No. 2401.3, which payment will constitute full compensation for all WORK described in Section 2401 – Sanitary Sewer Pipe, as shown on the Drawings and as directed by the ENGINEER.

2.6 SANITARY SEWER CLEAN OUT, (Pay Item No. 2401.4) PRICE BASED ON QUANTITY, EACH

A. Sanitary Sewer Clean Out will be measured per each, complete in place, including wyes, cleanouts, pipes and ductile iron or cast iron frame and cover, with "SEWER" cast on it, fittings, and adapters, as required to connect to existing sewer services from Rainforest Recovery Building to new sewer cleanout pipe including trench excavation, bedding, backfill, imported backfill, LSS-1 clamp couplings, adapters, fittings, sewer warning ribbon, sheeting and bracing, cleaning and testing, and all other items necessary for complete installation.

B. The determination of the connection point to the existing service pipe for the new cleanout location will be made by the ENGINEER at the time the existing service pipe has been exposed to view. The CONTRACTOR shall proceed with trenching towards the Rain Forest Recovery Center until the ENGINEER has determined a suitable connection point is reached.

C. Payment for Sanitary Sewer Clean Out shall be made at the Unit Price named in the Bid Schedule under Pay Item No. 2401.4, which payment will constitute full compensation for all WORK described in Section 02401 – Sanitary Sewer Pipe, as shown on the Drawings and as directed by the ENGINEER.

2.7 SANITARY SEWER MANHOLE, TYPE I WITH FIBERGLASS BASE LINER (Pay Item No. 2402.1) PRICE BASED ON QUANTITY, EACH

A. Sanitary Sewer Manholes with Fiberglass Base Liner will be measured per each, complete in place, including all excavation, bedding, backfill, imported backfill, dewatering, 24-inch thick 2" minus shot rock pad, waterproofing, frame and lid assembly, Infra-Riser adjustment rings, flexible seal adapters for pipe to manhole connections, temporary sewer bypass, Kor-N-Seal connectors, fiberglass base liner, and transition slab with asphalt pavement overlay, if required.

B. All WORK required to reset the frame and cover to grade if not installed to proper grade tolerances during paving operations, including construction of a concrete transition slab with pavement overlay, if necessary, will be considered incidental to other WORK under this Contract.

C. Payment for Sanitary Sewer Manhole, Type I with Fiberglass Base Liner will be made at the Unit Price named in the Bid Schedule under Pay Item No. 2402.1, which payment will constitute full compensation for all WORK described in Section 02402 – Sanitary Sewer Manholes and Cleanouts, as shown on the Drawings and as directed by the ENGINEER.

2.8 SANITARY SEWER MANHOLE, DROP INLET WITH FIBERGLASS BASE LINER (Pay Item No. 2402.2) PRICE BASED ON QUANTITY, EACH

A. Sanitary Sewer Manhole, Drop Inlet with Fiberglass Base Liner will be measured per each, complete in place, including all excavation, bedding, backfill, imported backfill, dewatering, 24-inch thick 2" minus shot rock pad, waterproofing, frame and lid assembly, Infra-Riser

adjustment rings, flexible seal adapters for pipe to manhole connections, temporary sewer bypass, Kor-N-Seal connectors, fiberglass base liner, and transition slab with asphalt pavement overlay, if required.

B. All WORK required to reset the frame and cover to grade if not installed to proper grade tolerances during paving operations, including construction of a concrete transition slab with pavement overlay, if necessary, will be considered incidental to other WORK under this Contract.

C. The removal and resetting of the Bartlett Regional Hospital sand/gravel covered storage area near sanitary sewer manhole MH-1 shall be considered incidental to other WORK under this Contract.

D. Payment for Sanitary Sewer Manhole, Drop Inlet with Fiberglass Base Liner will be made at the Unit Price named in the Bid Schedule under Pay Item No. 2402.2, which payment will constitute full compensation for all WORK described in Section 02402 – Sanitary Sewer Manholes and Cleanouts, as shown on the Drawings and as directed by the ENGINEER.

2.9 12-INCH PIPE CULVERT (Pay Item No. 2501.1) PRICE BASED ON QUANTITY, LINEAR FOOT

A. Culvert Pipes, including all coupling bands, bends and other items necessary for the proper joining of the culvert pipe sections, will be measured by the staked length in linear feet.

B. Pipes for storm drains shall be measured by the staked length, from center to center of structures or to ends of pipe if no structure is present. No deduction shall be made for footage through inlets, catch basins, or manholes.

C. Branch connections, coupling adapters and bends will be included in the linear foot measurement for conduit.

D. Trench excavation, bedding, backfill, imported backfill, and warning tape will not be measured for payment, but will be considered incidental to other WORK.

E. Payment for 12-Inch Pipe Culvert will be made at the Unit Price named in the Bid Schedule under Pay Item No. 2501.1, which payment will constitute full compensation for all WORK described in Section 02501 – Storm Sewer Pipe, as shown on the Drawings and as directed by the ENGINEER.

2.10 16-INCH HDPE WATER PIPE (Pay Item No. 2601.1) PRICE BASED ON QUANTITY, LINEAR FOOT

A. Measurement of water pipe will be made along the slope of the HDPE pipe from center of HDPE fittings and valves in linear feet. No deduction in length will be made for valves, fittings, or HDPE fused reducers or bends. No measurement for payment will be made for any ductile iron water pipe used to make up the overall connection, only HDPE water pipe will be measured for payment. All fittings and MJ plugs, other than valves, required for satisfactory installation of water pipe will be considered incidental to the HDPE water pipe pay items.

B. All trench excavation, bedding, backfill, imported backfill, sheeting and bracing, dewatering, cleaning, disinfection and pressure testing, concrete thrust blocks, warning tape, tracer wire, compaction and all other items necessary for a complete installation will not be measured for payment, but will be considered incidental to other WORK.

C. WORK under this Pay Item includes the installation of water pipe termination tracer wire boxes where shown on the Drawings, including the valve box, pressure treated board, stainless steel wire staples, and tracer wire.

D. Payment for 16-Inch HDPE Water Pipe will be made at the Unit Price named in the Bid Schedule under Pay Item No. 2601.1, which payment will constitute full compensation for all WORK described in Section 02601 - Water Pipe, as shown on the Drawings and as directed by the ENGINEER.

2.11 CONNECT TO EXISTING WATER PIPE (Pay Item No. 2601.2) PRICE BASED ON QUANTITY, EACH

A. Measurement for payment of Connect to Existing Water Pipe will be based on the actual quantity, each, of such connections made to existing water pipe installed in accordance with the requirements of the Contract Documents.

B. The WORK under this Pay Item includes all excavation, backfill, imported backfill, cutting and removing sections of existing water pipe, and all materials including new couplers, tees, bands, fittings, MJ adaptors, ductile iron water pipe, joint restraints, concrete thrust blocks, and all other WORK and materials necessary to complete connections of new water pipe to existing ductile iron water pipes.

C. The WORK also includes the removal, salvage and reinstallation of the existing 12” gate valve at the Salmon Creek Access Road water line connection.

D. Payment for Connect to Existing Water Pipe will be made at the amount named in the Bid Schedule under Pay Item No. 2601.2, which payment will constitute full compensation for all WORK described in Section 02601 – Water Pipe, as shown on the Drawings and as directed by the ENGINEER.

2.12 CORROSION PROTECTION (Pay Item No. 2601.3) PRICE BASED ON QUANTITY, EACH

A. Measurement for payment for Corrosion Protection will be the actual number of 18lb zinc anodes satisfactorily furnished and installed as shown on the Drawings.

B. Installation of corrosion protection includes all material, labor, equipment and other WORK as described and shown on the Drawings, including at fire hydrant legs.

C. Excavation and backfill will not be measured for payment but will be considered incidental to the WORK.

D. Payment for Corrosion Protection will be made at the Unit Price named in the Bid Schedule under Pay Item No. 2601.3, which payment will constitute full compensation for all WORK described in Section 02601 – Water Pipe, as shown on the Drawings and as directed by the ENGINEER.

2.13 TEMPORARY WATER SYSTEM (Pay Item No. 2601.4) PRICE BASED ON LUMP SUM PAY UNIT

A. Measurement for payment for Temporary Water System will be based upon the completion of the entire WORK as a Lump Sum Pay Unit, complete, all in accordance with the requirements of the Contract Documents.

B. The WORK under this Pay Item includes all plan submittals, furnishing and installing temporary NSF 61 approved water pipe, fittings, connections, disinfection, testing, residential notification, coordination with CBJ Water Department, isolating individual water services that do not have curb stops or where curb stops/valve boxes were not able to be located and all other items of WORK necessary for complete installation, operation and disassembling of a temporary water system.

C. Special requirements are identified in the Contract Documents regarding water main shutdowns and temporary water systems, which will be considered incidental to this Pay Item.

D. Payment for Temporary Water System will be made at the Unit Price named in the Bid Schedule under Pay Item No. 2601.4, which payment will constitute full compensation for all WORK described in Section 02601 – Water Pipe, as shown on the Drawings and as directed by the ENGINEER.

2.14 16-INCH BUTTERFLY VALVE (Pay Item No. 2602.1) PRICE BASED ON QUANTITY, EACH

A. Measurement for payment of 16-Inch Butterfly Valve will be based on the actual quantity, each, of such valves and valve boxes furnished and installed in accordance with the requirements of the Contract Documents.

B. WORK under this Pay Item includes all labor, equipment, materials, excavation, backfill, imported backfill, and all other WORK necessary to furnish and install butterfly valves in the locations shown on the plans and as directed by the ENGINEER.

C. Furnish and installation of associated valve boxes for the butterfly valves will be considered incidental.

D. All WORK required to reset the valve box and lid to grade if not installed to proper grade tolerances during paving operations, including construction of a concrete transition slab with pavement overlay (per CBJ Standard Detail 126 – Concrete Collar), will be considered incidental to other work under this Contract.

E. Payment for 16-Inch Butterfly Valve will be made at the Unit Price named in the Bid Schedule under Pay Item No. 2602.1, which payment will constitute full compensation

for all WORK described in Section 02602 – Valves, as shown on the Drawings and as directed by the ENGINEER.

2.15 FIRE HYDRANT ASSEMBLY WITH ACCESS PAD (Pay Item No. 2603.1) PRICE BASED ON QUANTITY, EACH

A. Measurement for payment of Fire Hydrant Assembly with Access Pad will be the actual number of fire hydrant assemblies satisfactorily installed, complete in place.

B. A Fire Hydrant Assembly with Access Pad includes the fire hydrant, the tee or required fitting at the mainline water pipe, thrust block, 8-inch HDPE water leg from the main to the gate valve (including the 8x6 reducer at the gate valve) barrel extension (if required), thrust block, eight-inch gate valve, valve box, adjustment of valve box, installation of fire hydrant guard posts colored to match fire hydrant, 6-inch DI pipe from the gate valve to the barrel, joint restraints, tracer wires, trace wire splice connectors, warning tape, hydrant flag, hydrant drain plug, and any other required fittings, including pipe to connect the hydrant leg from the mainline water pipe to the fire hydrant or from the stubbed water pipe to the fire hydrant as shown on the Drawings.

C. Hydrant access pad shall include all excavation, backfill, and sideslope grading. Base course grading D-1 will be paid for under Pay Item No. 2204.1, Base Course Grading D-1.

D. Asphalt for hydrant access pad shall be paid for under Pay Item No. 2801.2, A.C. Pavement for Sidewalks, Driveways and Hydrant Pads.

E. Payment for Fire Hydrant Assembly with Access Pad will be made at the Unit Price named in the Bid Schedule under Pay Item No. 2603.1 which payment shall constitute full compensation for all WORK described in Section 02603 – Fire Hydrants, as shown on the Drawings and as directed by the ENGINEER.

2.16 BARTLETT HOUSE 6-INCH WATER SERVICE (Pay Item No. 2605.1) PRICE BASED ON QUANTITY, EACH

A. Measurement for payment for Bartlett House 6-Inch Water Service will be the actual number of water services satisfactorily installed from the water pipe to the property line or tie in location as shown on the Drawings, and as directed by the Engineer.

B. Bartlett House water service includes the 16x6x16 HDPE tee assembly, 6” gate valve, HDPE service pipe, valve box, thrust block, trace wires, all required fittings, reducers and adaptors, warning tape, connecting to existing water service pipe, and all WORK necessary to install a complete water service at the locations shown on the Drawings.

C. Trench excavation, bedding, backfill and chlorination and pressure testing shall be considered incidental to this Pay Item.

D. Payment for Bartlett House 6-Inch Water Service shall be made at the Unit Price named in the Bid Schedule under Pay Item No. 2605.1, which payment will constitute full compensation for all WORK described in Section 02605 – Water Services as shown on the Drawings and as directed by the ENGINEER.

2.17 AEL&P 2-INCH WATER SERVICE REMOVAL AND RECONNECTION (Pay Item No. 2605.2) PRICE BASED ON QUANTITY, EACH

A. Measurement for payment for AEL&P 2-Inch Water Service Removal and Reconnection will be the actual number of 2-Inch water services satisfactorily removed and reinstalled as shown on the Drawings, and as directed by the Engineer.

B. AEL&P 2-Inch water service WORK includes the careful removal of the existing 2-inch service saddle from the 12" ductile iron water pipe, reinstalling the existing 2" HDPE water line to the new 12" HDPE water pipe with new 2" service tap and saddle, cutting back existing 2-inch HDPE water pipe as necessary to match the new service location and adjusting the existing trace wire as required including all required fittings, warning tape, and all WORK necessary to install a complete water service at the locations shown on the Drawings.

C. Trench excavation, bedding, backfill and chlorination and pressure testing shall be considered incidental to this Pay Item.

D. Payment for AEL&P 2-Inch Water Service Removal and Relocation shall be made at the Unit Price named in the Bid Schedule under Pay Item No. 2605.2, which payment will constitute full compensation for all WORK described in Section 02605 – Water Services, as shown on the Drawings and as directed by the ENGINEER.

2.18 PIPE INSULATION (Pay Item No. 2607.1) PRICE BASED ON QUANTITY, BOARD

A. Measurement for payment of Pipe Insulation will be the actual number of 2" x 2' x 8' boards installed.

B. Pipe insulation shall only be installed as directed by the ENGINEER. Only those boards of pipe insulation approved by the ENGINEER to be installed will be measured for payment.

C. Payment for Pipe Insulation will be made at the Unit Price named in the Bid Schedule under Pay Item No. 2607.1, which payment will constitute full compensation for all WORK described in Section 02607 – Pipe Insulation, as shown on the Drawings and as directed by the ENGINEER.

2.19 CONSTRUCTION SURVEYING (Pay Item No. 2702.1) PRICE BASED ON LUMP SUM PAY UNIT

A. Measurement for payment of Construction Surveying will be based upon the completion of the entire WORK as a Lump Sum Pay Unit, complete, all in accordance with the requirements of the Contract Documents.

B. The WORK required to remove and reset all existing survey monuments, monument cases, and other survey markers disturbed by construction activities, whether shown on the Drawings or not, will be considered incidental to other WORK.

C. Payment for Construction Surveying will be made at the Unit Price named in the Bid Schedule under Pay Item No. 2702.1, which payment will constitute full compensation for all WORK described in Section 02702 – Construction Surveying, as shown on the Drawings and as directed by the ENGINEER.

2.20 REMOVE AND RESET CHAIN LINK FENCE (Pay Item No. 2707.1) PRICE BASED ON QUANTITY, LINEAR FOOT

A. Measurement for payment of Remove and Reset Chain Link Fence will be measured per linear foot along the face of the reset fence complete in place and accepted.

B. The WORK for this Pay Item includes removing, salvaging, and reinstalling existing 6' high chain link fence fabric on new chain link fence posts with new fence concrete footings and all required fencing connection hardware in locations as shown on the Drawings. The WORK includes removal and disposal of existing chain link fence posts and footings. WORK shall include all materials, labor and equipment necessary to make a complete and satisfactory installation.

C. Payment for Remove and Reset Chain Link Fence will be made at the Unit Price named in the Bid Schedule under Pay Item No. 2707.1, which payment will constitute full compensation for all WORK described in Section 02707 – Chain Link Fence, as shown on the Drawings and as directed by the ENGINEER.

2.21 TOPSOIL (Pay Item No. 2709.1) PRICE BASED ON QUANTITY, CUBIC YARD

A. Measurement for payment of Topsoil will be by the cubic yard on the basis of truck measure for all WORK performed in the Contract under Section 02709 – Topsoil, completed and accepted.

B. Topsoil found to be in excess of 3-inches thick, in place and to final grade, will be deducted from the quantity measured by truck measure based on depths measured at randomly selected locations. Deductions will be computed based on the average end area method.

C. Payment for Topsoil will be made at the Unit Price named in the Bid Schedule under Pay Item No. 2709.1, which payment will constitute full compensation for all WORK described in Section 02709 – Topsoil, as shown on the Drawings and as directed by the ENGINEER.

2.22 TOPSOIL FINISH GRADING (Pay Item No. 2709.2) PRICE BASED ON QUANTITY, MAN-HOUR

A. Topsoil Finish Grading will be measured per man-hour for each man-hour, or part thereof, that the labor personnel is actually at the project site working as directed by the ENGINEER. No measurement for payment will be made for any man-hours not actually working on the finish grading of the topsoil as directed, including travel time, materials and tools expediting, or supervisory personnel.

B. No measurement for Topsoil Finish Grading will be made until the topsoil has been graded to a uniform appearance and to within the tolerances required under Pay Item No.

2709.1, Topsoil. Topsoil Finish Grading will only be required when requested by the ENGINEER.

C. Payment for Topsoil Finish Grading will be made at the Unit Price named in the Bid Schedule under Pay Item No. 2709.2, which payment will constitute full compensation for all WORK described in Section 02709 - Topsoil, as shown on the Drawings and as directed by the ENGINEER.

2.23 SEEDING, HYDRAULIC METHOD, TYPE III (Pay Item No. 2710.1) PRICE BASED ON QUANTITY, SLURRY UNIT

A. Seeding by the hydraulic method will be measured for payment by the number of slurry units (to the nearest 1/10 unit) of mixture actually applied to the designated area as shown on the Drawings and directed by the ENGINEER.

B. Payment for Seeding, Hydraulic Method, Type III will be made at the Unit Price named in the Bid Schedule under Pay Item No. 2710.1, which payment will constitute full compensation for all WORK described in Section 02710 – Seeding, as shown on the Drawings and as directed by the ENGINEER.

2.24 REMOVE AND DISPOSE OF STORM AND SANITARY SEWER PIPE (Pay Item No. 2716.1) PRICE BASED ON LUMP SUM PAY UNIT

A. Measurement for payment for Remove and Dispose of Storm and Sanitary Sewer Pipe will be based upon the completion of the entire WORK as a Lump Sum Pay Unit, complete, all in accordance with the requirements of the Contract Documents.

B. This WORK includes all existing sanitary sewer pipe, sanitary sewer cleanouts and storm drain pipes to be removed and disposed on the project.

C. Payment for Remove and Dispose of Storm and Sanitary Sewer Pipe will be made at the Unit Price named in the Bid Schedule under Pay Item No. 2716.1, which payment will constitute full compensation for all WORK described in Section 02716 – Storm and Sanitary Sewer Pipe Removal and Water Pipe Slurry, as shown on the Drawings and as directed by the ENGINEER.

2.25 REMOVE AND DISPOSE OF EXISTING WATER PIPE OR FILL WITH SLURRY (Pay Item No. 2716.2) PRICE BASED ON LUMP SUM PAY UNIT

A. Measurement for payment for Remove and Dispose of Existing Water Pipe or Fill with Slurry will be based upon the completion of the entire WORK as a Lump Sum Pay Unit, complete, all in accordance with the requirements of the Contract Documents.

B. The WORK under this Pay Item includes removal of existing water pipe, services, valves, hydrants, and other water system structures located within the right-of-way and project limits, unless otherwise indicated on the Drawings or directed by the ENGINEER.

C. WORK under this Pay Item includes filling existing water pipe with cement slurry where shown on the Drawings, as well as removing sections of water pipe or adding pipe and making pipe connections to allow slurry to be placed to the limits shown.

D. Payment for WORK under this Pay Item shall include backfill with suitable material from trench excavation or imported backfill and compaction to original grade or bottom of roadway subcut and returning disturbed areas to original or better condition.

E. Payment for Remove and Dispose of Existing Water Pipe or Fill with Slurry will be made at the amount named in the Bid Schedule under Pay Item No. 2716.2, payment of which will constitute full compensation for all WORK described in Section 02716 – Storm and Sanitary Sewer Pipe Removal and Water Pipe Slurry.

2.26 REMOVE AND DISPOSE OF SANITARY SEWER STRUCTURES (Pay Item No. 2717.1) PRICE BASED ON LUMP SUM PAY UNIT

A. Measurement for payment for Remove and Dispose of Sanitary Sewer Structures will be based upon the completion of the entire WORK as a Lump Sum Pay Unit, complete, all in accordance with the requirements of the Contract Documents.

B. Payment for Remove and Dispose of Sanitary Sewer Structures will be made at the Unit Price named in the Bid Schedule under Pay Item No. 2717.1, which payment will constitute full compensation for all WORK described in Section 2717 – Storm and Sanitary Structure Removal, as shown on the Drawings, and as directed by the ENGINEER.

2.27 UTILITY CONDUIT RELOCATION (Pay Item No. 2722.1) PRICE BASED ON QUANTITY, EACH

A. Measurement for Utility Conduit Relocation will be the actual number of power, telephone or cable television conductors or conduits actually relocated and functional, as described in Section 02722 – Utility Conduit Relocation, and as directed by the ENGINEER.

B. Only those power, telephone, or cable television conductors or conduits actually found to be in direct conflict with sewer pipe, or sewer structures, or other graded pipe or structures, and approved by the ENGINEER for relocation, will be measured for payment.

C. WORK under this Pay Item include all power, cable, or telephone conductors or conduits three (3) inches or less in diameter, and not encased within concrete.

D. Conduits that run along the pipe trench, and are not in direct conflict with the sewer pipe, but require that they must be pulled aside to clear the trenching and pipe installation operations will be considered incidental to other WORK under the Contract.

E. All WORK necessary to install sewer pipe, or other pipe beneath an existing utility conduit or conductor, including those that are encased in concrete, which does not vertically conflict with the new pipe, will be considered incidental to other WORK.

F. Payment for Utility Conduit Relocation will be made at the Unit Price named in the Bid Schedule under Pay Item No. 2722.1, which payment will constitute full compensation for all WORK described in Section 02722 – Utility Conduit Relocation, as shown on the Drawings and as directed by the ENGINEER.

2.28 A.C. PAVEMENT, TYPE II-A, CLASS B (Pay Item No. 2801.1) PRICE BASED ON QUANTITY, TON

A. Asphalt Concrete Pavement, Type II-A, Class B will be measured by the Ton. The WORK under this Pay Item includes all roadway paving including Hospital Drive and Salmon Creek Access Road.

B. No measurement will be made for asphalt concrete pavement that exceeds 12% more than the neat line quantity, as determined by the nominal design thickness multiplied by the area shown on the Drawings and/or as directed by the ENGINEER with a conversion factor equal to 94% of the approved mix design maximum specific gravity.

C. All resealing of joints with existing pavement, including those resealed after the pavement has cooled to ambient temperatures, will not be measured for payment, but will be considered incidental to other WORK under this Section.

D. Tack Coat applied to existing joint surfaces and along edge of gutters prior to placement of asphalt concrete pavement, will be considered incidental to other WORK under this Section. This includes the CRAFCO sealant required by DOT in the State of Alaska Utility permit.

E. Asphalt Pavement required for reconstructed collars around manholes and water valves, if any, will be considered incidental to other WORK under this Section.

F. Payment under Pay Item No. 2801.1 may include deductions in the final price if, after asphalt laboratory testing, the asphalt pavement does not meet the required specification. Deductions are further described in Section 02801 – Asphalt Concrete Pavement, Part 3 – Execution, Article 3.13 Acceptance Sampling and Testing, Paragraph K.

G. Payment for A.C. Pavement, Type II-A, Class B, will be made at the Unit Price named in the Bid Schedule under Pay Item No. 2801.1, which payment will constitute full compensation for all WORK described in Section 02801 - Asphalt Concrete Pavement, as shown on the Drawings and as directed by the ENGINEER.

2.29 A.C. PAVEMENT FOR SIDEWALKS AND HYDRANT PADS (Pay Item No. 2801.2) PRICE BASED ON QUANTITY, SQUARE YARDS

A. Measurement for Asphalt Concrete Pavement for Sidewalks and Hydrant Pads will be based on the actual Square Yards complete in place and accepted.

B. Asphalt concrete pavement shall be Type II-A, Class B or Type III, Class B.

C. No measurement will be made for asphalt concrete pavement for sidewalks that is placed outside of the design area as shown on the Plans and Drawings, unless approved by the ENGINEER.

D. WORK under Pay Item No. 2801.2 includes all pavement placed for sidewalks and hydrant pads, as shown on the Drawings and as directed by the ENGINEER.

E. All resealing of joints with existing pavement will not be measured for payment but will be considered incidental to other WORK under this Section.

F. Payment for A.C. Pavement for Sidewalks, Driveways and Hydrant Pads will be made at the Unit Price named in the Bid Schedule under Pay Item No. 2801.2, which payment will constitute full compensation for all WORK described in Section 02801 – Asphalt Concrete Pavement, as shown on the Drawings and as directed by the ENGINEER.

2.30 REMOVE EXISTING ASPHALT SURFACING (Pay Item No. 2806.1) PRICE BASED ON QUANTITY, SQUARE YARD

A. Removing Existing Asphalt Surfacing, including leveling courses and asphalt overlays, will be measured per square yard, complete, except that no measurement will be made for removing asphaltic surfacing less than one inch thick. Asphalt thickness is estimated to be 2-3 inches thick.

B. Removal of existing asphalt surfacing will be measured per top surface area square yard, which will include full thickness of all layers of existing asphalt, including overlays and underlying pavement.

C. Payment for Remove Existing Asphalt Surfacing will be made at the Unit Price named in the Bid Schedule under Pay Item No. 2806.1, which payment will constitute full compensation for all WORK described in Section 02806 – Remove Existing Asphalt Surfacing, as shown on the Drawings and as directed by the ENGINEER.

PART 2 - PRODUCTS (Not Used)

PART 3 - EXECUTION (Not Used)

END OF SECTION

SECTION 01550 – SITE ACCESS AND STORAGE, PART 1 – GENERAL, Article 1.3, MAINTENANCE OF TRAFFIC, ***replace*** *paragraph M and* ***add*** *paragraph U:*

M. Provide pedestrian detours as necessary in areas adjacent to new construction following demolition of existing surface. The CONTRACTOR shall provide smooth, graded pathways, free of mud, muck and other materials that will be objectionable to people in street shoes. The pathways shall be a minimum of 36-inches wide, and shall be clearly marked with staking, warning ribbons, or other methods to guide pedestrians through the construction areas and to their residence walkways, if applicable.

U. The CONTRACTOR shall coordinate with the following facilities and contacts as necessary to ensure safe, uninterrupted access to these facilities during construction as well as coordination with any CBJ utility shutdowns:

Bartlett Regional Hospital – Marc Walker, 907-796-8888

Wildflower Court – Zach Fisher, 907-463-8763
Dave Anderson, 907-463-8739
Rainforest Recovery – Marc Walker, 907-796-8888
Bartlett House – Marc Walker, 907-796-8888
Bartlett Behavioral Health Facility (Under Construction)
CBJ Project Manager – Jeanne Ryan, 907-586-0800, Ext #2
Dawson Construction – Jason Sabon, 907-419-8175
DIPAC – Brock Meredith, 907-463-5114
Alaska Electric Light and Power – Bryan Farrel, 907-463-6339
CBJ Water Utility Department – Loni Vankirk, 907-723-4975
CBJ Wastewater Department – Otto Dunayski, 907-209-3785
General Public for Salmon Creek Trail Use
CBJ Parks and Recreation – Michele Elfers, 907-364-2800
Trail Mix – Ryan O'Shaughnessy, 907-209-5069

SECTION 01550 – SITE ACCESS AND STORAGE, PART 1 – GENERAL, Article 1.3, MAINTENANCE OF TRAFFIC, *paragraph S, **add** the following:*

5. Contractor's active work zone on Hospital Drive and area in front of Bartlett Regional Hospital emergency drop-off area shall be returned to a safe and passable condition for vehicles and pedestrians at the end of each work shift. One lane of traffic shall be maintained to the Bartlett Regional Hospital emergency drop-off area at all times.

SECTION 01570 – EROSION AND SEDIMENT CONTROL, PART 1 – GENERAL, Article 1.1, THE REQUIREMENT, ***add** following paragraph:*

D. The area of disturbance for this project is less than 1 acre.

SECTION 01700 – PROJECT CLOSE-OUT, PART 1 – GENERAL, Article 1.3, FINAL SUBMITTALS, Paragraph A. ***Delete*** items 6, 7 and 8 and ***replace** with the following sub-paragraph:*

6. Compliance Certificate and release, signed by the CONTRACTOR, shall be submitted to the Engineering Contract Administrator.

SECTION 01700 – PROJECT CLOSE-OUT, PART 1 – GENERAL, Article 1.3, FINAL SUBMITTALS, ***Add** the following paragraph:*

C. Before final payment, the CONTRACTOR shall provide the OWNER with clearance from the Alaska Department of Labor and Workforce Development for the CONTRACTOR and all Subcontractors that have worked on the Project. This clearance shall indicate that all Employment Security Taxes have been paid. A sample form for this propose is at the end of Section 00800 – supplementary General Conditions.

SECTION 01700 – PROJECT CLOSE-OUT, PART 1 – GENERAL, R***eplace** the* COMPLIANCE CERTIFICATE AND RELEASE FORM *with the following form:*

COMPLIANCE CERTIFICATE AND RELEASE FORM

PROJECT: Bartlett Regional Hospital Water and Sewer Upgrades
CONTRACT NO: BE22-185

The **CONTRACTOR** must complete and submit this form to the Contract Administrator with respect to the entire contract and submit completed Subcontractor Compliance forms for each Subcontractor used on the Contract and listed on the Subcontractor report.

Completed forms shall be submitted upon completion of the Project. All requirements and submittals must be met before final payment will be made to the CONTRACTOR.

I certify that the following and any referenced attachments are true:

- All WORK has been performed, materials supplied, and requirements met in accordance with the applicable Drawings, Specifications, and Contract Documents.

- All payments to Subcontractors and Suppliers have been made in accordance with Alaska Statute 36.90.210. If not, please provide written explanation, for each case, why and the specific mutual payment agreement reached with the Supplier or Subcontractor.

- CHECK ONE:
  - ☐ All Suppliers and Subcontractors have been paid in full with no claims for labor, materials or other services outstanding.

  - ☐ The following Suppliers and Subcontractors are due final payment which will be made upon the release of the final payment by the CBJ. List the Suppliers and Subcontractors and the amount they are due below (attach separate sheet if necessary):

	Supplier or Subcontractor	Amount Owed
1.		$
2.		$
3.		$
4.		$
5.		$
6.		$
7.		$

- All employees have been paid not less than the current prevailing wage rates set by the State of Alaska (or U.S. Department of Labor, as applicable).

- All equal employment opportunity, certified payroll and other reports have been filed in accordance with the prime contract.

- The attached list of Subcontractors is complete (required from CONTRACTOR). The City Engineer was advised and approved of all Subcontractors before WORK was performed and has approved any substitutions of Subcontractors.

- All DBE firms listed as a precondition of the prime contract award must have performed a commercially useful function in order for the WORK to count to a DBE goal. All DBE firms performed the WORK stated and have received at least the amount claimed for credit in the Contract Documents.

- All DBE Subcontractors must attach a signed statement of the payment amount received, the nature of WORK performed, whether any balance is outstanding, and indicate that no rebates are involved.

- If the amount paid is less than the amount originally claimed for DBE credit, the CONTRACTOR has attached approval from the City Engineer for underutilization.

I understand it is unlawful to misrepresent information in order to receive a payment which would otherwise be withheld if these conditions were not met. I am an authorized agent of this firm and sign this freely and voluntarily. The foregoing statements are true and apply to the following project contractor.

_____ Capacity: CONTRACTOR
Firm Name

_____ _____ _____
Signed Printed Name and Title Date

Return completed form to: Engineering Contracts Division, City and Borough of Juneau, 155 South Seward Street, Juneau, AK 99801 or by email to: contracts@juneau.org

Call (907) 586-0800 if we can be of further assistance or if you have any questions.

SUBCONTRACTOR COMPLIANCE CERTIFICATE AND RELEASE FORM

PROJECT: Bartlett Regional Hospital Water and Sewer Upgrades
CONTRACT NO: BE22-185

Each **SUBCONTRACTOR** must complete and submit this form to the Contract Administrator, through the General Contractor, with respect to the entire contract.

Completed forms shall be submitted upon completion of the Project. All requirements and submittals must be met before final payment will be made to the CONTRACTOR.

I certify that the following and any referenced attachments are true:

- All WORK has been performed, materials supplied, and requirements met in accordance with the applicable Drawings, Specifications, and Contract Documents.

- _____(name of firm) has been paid by the Contractor in accordance with Alaska Statute 36.90.210. (If not, please provide written explanation on an attached sheet, for each case. Provide specific details why payment was not made and the specific mutual payment agreement reached with the Contractor if it is still unresolved.)

- CHECK ONE:
  - ☐ I / WE have been paid in full by the Contractor, with no claims for labor, materials or other services outstanding.

  - ☐ I / WE are due the following amount from the Contractor which is included in the Contractors Request for Final Payment. WE are due a total of $_____ for the following individual items that have yet to be paid (attach separate sheet if necessary).

	Outstanding Payment Item	Outstanding Amount Owed
1.		$
2.		$
3.		$
4.		$
5.		$
6.		$
7.		$

- All employees have been paid not less than the current prevailing wage rates set by the State of Alaska (or U.S. Department of Labor, as applicable).

- All equal employment opportunity, certified payroll and other reports have been filed in accordance with the prime contract.

I understand it is unlawful to misrepresent information in order to receive a payment which would otherwise be withheld if these conditions were not met. I am an authorized agent of this firm and sign this freely and voluntarily. The foregoing statements are true and apply to the following project contractor.

_____ Capacity: SUBCONTRACTOR
Firm Name

_____ _____ _____
Sign Printed Name and Title Date

Prime Contractor shall return completed form to: Engineering Contracts Division, City and Borough of Juneau, 155 South Seward Street, Juneau, AK 99801, or email: contracts@juneau.org

Call (907) 586-0800 if we can be of further assistance or if you have any questions.

END OF SECTION

SECTION 02202 – EXCAVATION AND EMBANKMENT, PART 2 – PRODUCTS, ***add*** *the following Article*:

2.9 USABLE MATERIAL FROM EXCAVATION

A. Usable material from excavation shall meet the requirements for Embankment.

B. The CONTRACTOR is responsible for stockpiling, managing, handling, and transporting usable material from excavation in a manner that ensures the suitability of usable material at the time of placement.

SECTION 02203 – **TRENCHING**, PART 2 - MATERIALS, Article 2.2 BEDDING, ***replace*** *paragraph A with the following:*

A. Pea gravel, or similar open graded product, shall not be used for bedding. Class A bedding material shall be used for all water and sanitary sewer pipes installed on this project. Class B bedding material shall be used for all storm drain pipes installed on this project.

SECTION 02204 – **BASE COURSE**, PART 2 - PRODUCTS, Article 2.1 MATERIAL, ***add*** *the following paragraph*:

E. Base course for this Project shall have a maximum Nordic Abrasion Value of 18, as determined by ATM 312, and shall meet the gradation requirements for grading D-1.

SECTION 02204 – BASE COURSE, PART 3 – EXECUTION Article 3.1, GENERAL, ***replace*** *Paragraph I with the following:*

I. The surface of the base course, when using a taut string line or straight edge of adequate length, spanning between two known grade control points (blue top hubs, lip of gutter, edge existing asphalt etc.) shall not show any deviation in excess of 3/8 inch. This shall be checked perpendicular and longitudinally to the grade control points and be documented by the INSPECTOR. The finish surface shall not vary more than 1/2 inch from established grade. Additionally, the algebraic average of all deviations from established grade of the finish base course surface elevations taken at 50-foot intervals shall be less than 0.02 foot.

SECTION 02401 – **SANITARY SEWER PIPE**, PART 3 - EXECUTION, Article 3.1, CONSTRUCTION, ***replace*** *paragraph O with the following:*

O. Locate Sanitary Sewer Services shall require that the CONTRACTOR verify the location and depth of each sewer service pipe along the proposed storm drain mainline alignment. These verifications will require that the sewer service pipe be excavated at the storm drain pipe crossings so a visual check can be made that no damage occurs during trenching and backfilling operations.

1. The CONTRACTOR shall notify the ENGINEER when each crossing will occur with enough time for the ENGINEER to be present during the excavation operations.

2. The CONTRACTOR shall take all measurements necessary to ensure no damage occurs to the sewer services or the main line piping during its operations. The CONTRACTOR shall spray paint the sewer service alignment prior to proof rolling the subgrade.
3. All sewer service piping damaged as a result of the CONTRACTOR's operations shall be repaired at the CONTRACTOR's expense.
4. Some sewer services may be found to be at, or close to the roadway and sidewalk subcut levels. The CONTRACTOR shall take all measures necessary to ensure no damage occurs to the sewer services or the main line piping during its operations.

SECTION 02402 – **SANITARY SEWER MANHOLES AND CLEANOUTS**, PART 3 - EXECUTION, Article 3.1, CONSTRUCTION, Paragraph M, ***delete*** *sub-paragraph 4 and replace with the following:*

4. Rubber grade ring adjustment risers shall be bonded to adjacent surfaces by laying at least 3 beads, a minimum of 5/16" thick of *Liquid Nails –Polyurethane Construction Adhesive* on each side of the rubber risers or the top surface of the concrete course. Two of the adhesive beads shall be within 1" of the edges of the rubber grade ring adjustment riser, the third shall be equidistant between the two outer beads. The beads shall be continuous around the rubber grade ring adjustment riser.

SECTION 02402 – **SANITARY SEWER MANHOLES AND CLEANOUTS**, PART 3 - EXECUTION, Article 3.1, CONSTRUCTION, ***add*** *the following paragraph:*

P. The CONTRACTOR shall repair all imperfections and leaks disclosed by either visual inspection or testing. The method of repair shall be subject to the ENGINEER's approval.

SECTION 02501 – **STORM SEWER PIPE**, PART 2 – PRODUCTS, Article 2.6, CORRUGATED POLYETHYLENE PIPE, ***delete*** paragraphs B and C and ***replace*** with the following:

B. Pipe shall be joined with "ADS, Inc. N-12" (bell-and-spigot) water-tight (WTIB), or approved equal, meeting the requirements of AASHTO M252 or AASHTO M 294 or ASTM F2306. The pipe joining system shall be water-tight integral bell & gasketed spigot meeting the requirements of ASTM D3212 or equivalent standard.

C. The bell-and-spigot joint shall be water-tight and incorporate a gasket meeting the requirements of ASTM F477 or equivalent standard. Gaskets shall be installed in the bell, or on the pipe, by the pipe manufacturer and covered with a removable wrap to ensure the gasket is free from debris at the time of installation A joint lubricant shall be used on the gasket and bell during assembly.

SECTION 02601 – WATER PIPE, PART 2 – PRODUCTS, Article 2.3, FITTINGS, ***delete*** paragraph J and ***replace*** with the following:

J. Electrofusion couplers are discouraged and may only be allowed with prior, written approval of the ENGINEER. Not having a fusion machine capable of being placed in the excavation to accomplish butt fusion is not an acceptable reason for use of an electrofusion coupler.

SECTION 02601 – WATER PIPE, PART 2 – PRODUCTS, Article 2.9, TEMPORARY WATER SYSTEM, ***add*** the following paragraphs:

D. No WORK shall begin until the temporary water system plan has been approved by CBJ. Plans must be submitted for the temporary water lines that address flushing, disinfection and microbial testing before being placed into service, and that show that the water lines meet Standard NSF-61 and that the temporary system will have appropriate cross connection controls. All affected water users will be notified a minimum of 48 hours in advance.

E. Maximum allowable shutdown time for the connection of the 16" HDPE water line to the existing water lines on Hospital Drive and Salmon Creek Access Road is 8 hours. The water line shutdown must be coordinated with all project contacts listed under Special Provision Section 01550, Article 1.3 Paragraph U. Shutdown times may be reduced or not allowed at a specific time because of weather or other factors. Weather or other factors may require that the water main shutdown occur at night. Water flow capacity shall be maintained if the Contractor plans to install a temporary bypass line. All temporary water system plans, and interruptions shall be reviewed and approved by the CBJ Water Utility Department prior to implementation. The Contractor shall demonstrate that adequate labor-force and all parts and tools will be provided to complete the work within the approved shutdown time.

SECTION 02601 – WATER PIPE, PART 3 – EXECUTION, Article 3.5, HYDROSTATIC TESTING, ***add*** the following paragraphs:

K. At no time shall the CONTRACTOR pressure test against existing valves, plugs, caps, fire hydrants or curb stops. At no time shall the CONTRACTOR use disinfection water or untreated water to pressure test against any valve or curb stop that is connected to a public water system.

L. Pressure testing shall be completed for the entire length of new water pipe and services to the limits where new water pipes and services connect to existing water pipes and services, including pressure testing to the limits of connection to existing fire hydrant legs. The CONTRACTOR is responsible for providing all temporary or permanent joint restraints, thrust blocks, fittings, caps, plugs, curb stops and valves necessary for completion of pressure testing activities in accordance with SECTION 02601 and to the satisfaction of the ENGINEER.

SECTION 02601 – WATER PIPE, PART 3 – EXECUTION, Article 3.8, CONNECTIONS TO EXISTING PIPES, ***add*** the following paragraph:

C. All flushing, pressure testing, and disinfection of new water pipes shall be completed in accordance with SECTION 02601 and accepted by the ENGINEER prior to making final or permanent connections to existing water pipes and services. At no time during flushing, pressure testing, or disinfection activities shall there be a temporary or permanent cross-connection between new water pipe and existing water pipe or services, unless otherwise approved by the ENGINEER or a backflow prevention assembly meeting ANSI/AWWA Standards C510-97 or C511-97 is used to ensure no backflow into the existing and unprotected public water system occurs.

SECTION 02602 – VALVES, PART 3 – EXECUTION, Article 3.1, CONSTRUCTION ***add*** the following paragraph:

F. Butterfly valves shall be dry fit with MJ Adapter to verify the MJ Adapter has been properly machined to allow the Butterfly valve to operate freely after bolting together. The operation shall be verified by the ENGINEER and occur prior to fusion of the MJ Adapter to the piping. The butterfly valve shall be rated for 250 psi pressure.

SECTION 02605 – **WATER SERVICES**, PART 3 – EXECUTION, Article 3.1, CONSTRUCTION, ***add*** *the following paragraph*:

I. The location of the existing water services lines shown on the drawings are based off limited as-built information and field locates and are not considered reliable indications of actual locations. The CONTRACTOR is responsible for all work required to field locate the existing service lines to verify their location. These services may not run in a straight line to the water main as shown. The CONTRACTOR shall verify the connection location, material, size, and depth of each water service pipe.

J. Each electrofusion service saddle shall be pressure tested to 120 psi after completion of the electrofusion process and prior to tapping into the mainline. It shall hold the test pressure for at least 5 minutes, any drop in pressure will indicate a faulty connected and require installation and testing of a new electrofusion saddle. The intent of this informal test is verification of a sound electrofusion connection to the mainline. This testing requirement does not remove any of the requirements for pressure testing the entire water system as specified in Section 02601 – Water Pipe.

SECTION 02702 – **CONSTRUCTION SURVEYING**, PART 3 – EXECUTION, Article 3.1, CONSTRUCTION, ***add*** *the following paragraphs:*

M. A closed level loop is required through Temporary Bench Marks (TBMs) listed in the Drawings. No side shots will be permitted. A copy of the surveyor's notes shall be provided to the ENGINEER. No payment will be made for Pay Item No. 2702.1 until the ENGINEER has received a copy of these surveyor's notes.

N. Global Position System (GPS) survey methods shall not be used for grading control unless approved in writing by the ENGINEER.

SECTION 02709 – **TOPSOIL**, PART 2 – PRODUCTS, Article 2.1, MATERIALS, ***revise*** *the first sentence of paragraph C to read:*

C. Topsoil shall contain not less than 8% or more than 20% organic matter by weight, as determined by loss-on-ignition of oven-dried samples in accordance with ASTM T-6.

SECTION 02709 – **TOPSOIL**, PART 3 – EXECUTION, Article 3.1, CONSTRUCTION, ***revise*** *paragraph A to read:*

A. All areas beyond the roadway shoulder, pedestrian path, and driveway edges that require regrading or are otherwise disturbed during construction, shall be graded to a neat, uniform, well-drained grade lines and appearance, as determined by the ENGINEER.

These areas shall be hydroseeded, unless otherwise shown on the Drawings, or directed by the ENGINEER.

SECTION 02709 – **TOPSOIL**, PART 3 – EXECUTION, Article 3.1, CONSTRUCTION, ***add*** *the following:*

F. No topsoil shall be placed on the graded slope areas unless these areas can be finish graded and seeded within 30 days of the date originally placed. Topsoil shall be consolidated/rolled by a water filled lawn roller or other ENGINEER approved method prior to application of seed. Topsoil placed, but not finish graded or seeded within 30 days, will be deducted from payment until the topsoil has been scarified, graded and supplemented with additional topsoil as required to provide a smooth, well graded and scarified surface suitable for seeding, as determined by the ENGINEER. All additional topsoil required after 30 days of the original placement will not be measured for payment but will be considered incidental to other WORK.

SECTION 02716 – **REMOVE AND DISPOSE OF CULVERT PIPE**, ***delete*** *in its entirety and* ***replace*** *with the following Section:*

SECTION 02716 – STORM AND SANITARY SEWER PIPE REMOVAL AND WATER PIPE SLURRY

PART 1 - GENERAL

1.1 DESCRIPTION

A. The WORK under this Section includes providing all labor, tools and equipment necessary for removal and disposal of existing storm drainage pipe, sanitary sewer pipe, and the existing water system or filling the existing water pipes with cement slurry within the project limits designated for removal.

PART 2 – PRODUCTS

2.1 MATERIALS

A. Cement slurry used to fill conveyance structures prior to abandonment shall consist of a flowable mixture of cement, water, sand, and additives that, when cured for three (3) days, will have a minimum compressive strength of 150 pounds per square inch (psi). A cement slurry design shall be submitted by the CONTRACTOR for approval by the ENGINEER prior to use.

PART 3 – EXECUTION

3.1 GENERAL

A. All storm drainage pipe, 4-inches or larger, shown on the Drawings for removal shall be removed and backfilled with suitable material to match the adjacent ground surface. Usable material from excavation shall be used as backfill. Disposal of the pipe shall be in accordance with these Specifications.

B. Existing water main pipe, services, water valves, valve boxes, fittings, thrust blocks, and other water system components shall be removed in their entirety and disposed of in accordance with the Contract Documents, as shown on the Drawings and as directed by the ENGINEER.

C. All materials removed during performance of the WORK described herein shall become the property and responsibility of the CONTRACTOR.

D. Voids shall be backfilled with suitable material to match the adjacent ground surface or bottom of subcut, and placement of material used for backfill shall not exceed 2-foot lifts. Usable material from excavation may be used as backfill as approved by the ENGINEER, and all backfill placed shall be compacted to the satisfaction of the ENGINEER.

E. Where shown on the Drawings, existing water pipes shall be abandoned in place by filling with Cement Slurry to a minimum of eighty percent (80%) capacity of the calculated volume based on the length and inside diameter of the conveyance structure being abandoned. If necessary, all pumps, vent tubes, and WORK to open or remove additional sections of the existing conveyance structure for meeting the minimum volume filled requirement shall be the responsibility of the CONTRACTOR.

END OF SECTION

***Add** the following Section:*

SECTION 02722 – UTILITY CONFLICT RELOCATION

PART 1 - GENERAL

1.1 DESCRIPTION

B. The WORK under this Section includes subcontracting or otherwise arranging with AEL&P, ACS Telephone, or GCI Cable Network for any work with the power, telephone and television services, respectively, for the WORK shown on the Drawings or described in this Section.

PART 2 – PRODUCTS

2.1 MATERIALS

A. Materials shall be as specified by the owner of the private utility service company.

B. Materials shall conform to the requirements of the National Electrical Code.

PART 3 – EXECUTION

3.1 CONSTRUCTION

A. Construction shall be in accordance with the agreement arranged by the CONTRACTOR with the owner of the utility service being relocated, except that the Drawings and Specifications shall take precedence in the event of a conflict.

B. ALL WORK with the electrical utilities shall conform to the requirements and standards established by the private utility companies and shall meet all applicable codes and regulations.

C. The WORK under this Section does not include excavating, backfilling, or any other work under, around, or along electrical utilities that are not in direct conflict with other work.

3.2 ELECTRICAL CONDUCTOR RELOCATION

A. The WORK under this Item include only those electrical conduit or conductor relocations required due to a direct conflict with new piping or structures, that are 3-inches or less in diameter, and not encased in concrete.

END OF SECTION

SECTION 02801 – ASPHALT CONCRETE PAVEMENT, PART 1 – GENERAL, Article 1.1, DESCRIPTION, ***revise*** *paragraph B as follows and* ***add*** *paragraph C:*

B. Roadway asphalt concrete mix for this Project shall be Type II-A, Class B. See Table 02801-1 and Table 02801-2.

C. Asphalt concrete mix for pedestrian paths and hydrant pads may be either Type III, Class B, or Type II-A, Class B. See Table 02801-1 and Table 02801-2.

SECTION 02801 – ASPHALT CONCRETE PAVEMENT, PART 1 – GENERAL, Article 1.1, DESCRIPTION, Table 02801-1 ASPHALTIC CONCRETE MIX REQUIREMENTS ***revise*** *the table as follows:*

DESIGN PARAMETERS	CLASS A	CLASS B
Voids in total mix, percent	2.5 – 4.0	2.5 – 4.0%
Percent oil content	5.8 – 6.8	5.8 – 6.8%

SECTION 02801 – **ASPHALT CONCRETE PAVEMENT**, PART 2 - PRODUCTS, Article 2.1, COMPOSITION OF ASPHALT CONCRETE MIXTURES – JOB MIX DESIGN, Paragraph C: ***delete*** *sub-paragraph 6 and* ***replace*** *with the following:*

6. The mix design shall be 50 blow Marshall Method.

SECTION 02801 – **ASPHALT CONCRETE PAVEMENT**, PART 2 - PRODUCTS, Article 2.3, ASPHALT MATERIALS, ***delete*** *paragraph B and* ***replace*** *with the following:*

B. ASPHALT CEMENT

1. Asphalt cement shall be designated PG 58-28 PLUS.

SECTION 02801 – **ASPHALT CONCRETE PAVEMENT**, PART 2 - PRODUCTS, ***add*** *the following Article:*

2.6 RECLAIMED ASPHALT PAVEMENT

A. Reclaimed Asphalt Pavement (RAP) may be used in the asphalt mix up to 20% of the total mix.

B. RAP will be available at no cost from the CBJ Lemon Creek Stockpile. The contractor will notify Michael Eich, CBJ Pits and Quarries Manager, 586-0874, of quantity needed, to coordinate access and for Lemon Creek Gravel Pit permit compliance requirements, prior to taking any RAP. The Contractor shall weigh each load at the CBJ scales and record on a CBJ scale ticket. The CBJ makes no guarantees of the quantity or quality of the RAP.

C. The Contractor shall provide a mix design showing the inclusion of the specified percentage of RAP according to the mix design requirements in this section.

D. Use of RAP in the Contractor's asphalt mix does not nullify any of the other specification requirements or associated asphalt quality deductions.

SECTION 02801 – ASPHALT CONCRETE PAVEMENT, PART 3 - EXECUTION, Article 3.2, EQUIPMENT, Paragraph C, ***delete*** *item 2 and* ***replace*** *with the following*:

2. Each truck shall have a watertight canvas cover of such size as to extend at least one foot over the sides and end of the truck bed and be adequately secured to protect the asphalt concrete mixture. The use of canvas covers will be required at all times.

3. The Contractor shall make the trucks to be used for hauling the asphalt concrete mixture available for inspection by the Engineer prior to paving day and shall be identified in the Paving Plan. Trucks that do not meet the requirements of this section may be rejected by the Engineer and not allowed on the project unless the deficiencies are remedied and approved by the Engineer in advance of hauling asphalt. Use of trucks not approved for delivery by the Engineer may result in the rejection of the asphalt concrete mixture within the unapproved truck.

SECTION 02801 – ASPHALT CONCRETE PAVEMENT, PART 3 - EXECUTION, Article 3.2, EQUIPMENT, ***add*** *the following paragraph:*

E. Heavy, full size, self-propelled laydown units that will place concentrated loading on curb and gutter sufficient to cause breakage, or other damage to the concrete, will not be permitted.

SECTION 02801 – ASPHALT CONCRETE PAVEMENT, PART 3 - EXECUTION, Article 3.8, SPREADING AND PLACING, ***delete*** *paragraph H and* ***replace*** *with the following:*

H. Manhole frame and covers and water valve boxes shall be set to final grade in accordance to CBJ Standard 205 – MANHOLE HEIGHTS and 407 – MAINLINE VALVE, prior to paving operations. If the cover lugs or frame, whichever is higher, does not meet the

required depression range following the finish paving operations, the CONTRACTOR shall construct a transition slab with asphalt pavement overlay, per CBJ Standard 126 – CONCRETE COLLAR, at no additional cost to the OWNER.

SECTION 02801 – ASPHALT CONCRETE PAVEMENT, PART 3 - EXECUTION, Article 3.8, SPREADING AND PLACING, ***add*** *the following paragraph:*

K. The Contractor shall hold a pre-paving conference on site with the Engineer to review and verify the accuracy of the Paving Plan prior to paving day. The paving foreman shall be present to explain each of the operational details included in the paving plan.

SECTION 02801 – ASPHALT CONCRETE PAVEMENT, PART 3 - EXECUTION, Article 3.10, JOINTS, ***replace*** *paragraph C with the following:*

C. Improperly formed asphalt joints resulting in surface irregularities or rock segregation shall be removed, full road width, replaced with new material, and thoroughly compacted. The edge of pavement along the centerline joint shall not be allowed to drop below 200 degrees Fahrenheit prior to the asphalt mix from the adjacent lane being placed against this edge.

SECTION 02801 – ASPHALT CONCRETE PAVEMENT, PART 3 – EXECUTION, Article 3.10, JOINTS, ***add*** the following paragraph:

J. All joints with existing asphalt pavement shall be resealed with asphalt cement after the new pavement has cooled to ambient temperature. All joints with concrete gutters found to have a gap shall be blown out using a weed burner torch, filled with asphalt cement, and covered with a layer of dry sand. Excess sand shall be removed, and asphalt cement placed on the concrete gutter more than one-inch from the edge of gutter shall be removed using solvent or other approved methods.

SECTION 02801 – ASPHALT CONCRETE PAVEMENT, PART 3 - EXECUTION, Article 3.13, Acceptance Sampling and Testing, ***add*** *the following paragraph:*

K. For each lot of asphalt pavement produced, at least two (2) samples shall be taken by the CONTRACTOR for purposes of acceptance testing by the OWNER. The CONTRACTOR shall split the sample with the OWNER to retain a portion for their use. The sample shall be taken according to proper sampling methods, from the asphalt pavement on the grade.

The deduction amounts will be determined from the OWNER's acceptance testing results. The values will be calculated by averaging the amount of the absolute value of the two tests outside the job mix design tolerance (the difference between the actual test result and the job mix design tolerance range). A test value within the job mix design tolerance will be considered a zero (0) value for averaging the two values. Deduction from the asphalt pavement pay item shall be made at the following amounts:

1. #200 Sieve: the greater of either 1.0% the contract price for asphalt pavement placed within the sampled lot or $500 per each 0.1% outside the job mix design tolerance, not exceeding 6% maximum, of the percent passing the #200 sieve. The allowable tolerance for this Contract shall be ±1.0% of the target mix design value and shall not

exceed the content limits specified in this Contract. If values fall outside of the allowable tolerance, deductions shall be calculated from the mix design target value.

2. Asphalt Content: the greater of either 1.0% of the contract price for asphalt pavement placed within the sampled lot or $500 per each 0.1% outside the allowable job mix design asphalt content tolerance. The allowable asphalt content tolerance for this Contract shall be ±0.4% of the target job mix design value and not to fall below a value of 5.6%. If values fall outside of the allowable tolerance, deductions shall be calculated from the mix design target value.

The pay deductions for exceeding the job mix design tolerances does not constitute acceptance of a mix that does not meet the specifications. Further acceptance testing will be performed to determine if the asphalt pavement specifications have been met. No payment for asphalt pavement will be made for asphalt pavement exceeding job mix design tolerances, or not meeting asphalt pavement specifications, until additional testing determines whether the asphalt pavement meets all other specifications.

For the purposes of this Contract, one lot of asphalt pavement is defined as 500 tons, or a single day's asphalt pavement production of at least 100 tons.

END OF SPECIAL PROVISIONS

BARTLETT REGIONAL HOSPITAL WATER AND SEWER UPGRADES

CBJ CONTRACT No. BE22-185

CITY & BOROUGH OF JUNEAU, ALASKA

SHEET INDEX

SHEET No.	DESCRIPTION
C001	COVER SHEET
C002	GENERAL NOTES, ABBREVIATIONS & SYMBOLS
C003	SURVEY CONTROL DIAGRAM
C004	PROJECT PHASING AND TRAFFIC CONTROL NOTES
C100	CONSTRUCTION DETAILS
C101	CONSTRUCTION DETAILS
C102	CONSTRUCTION DETAILS
C103	CONSTRUCTION DETAILS
C104	CONSTRUCTION DETAILS
C105	WATER LINE CONNECTION DETAILS
C200	UTILITY PLAN VIEW
C201	UTILITY PLAN VIEW
C202	UTILITY PLAN VIEW
C203	UTILITY PLAN VIEW
C300	PROFILE - WATER LINE
C301	PROFILE - SEWER LINE

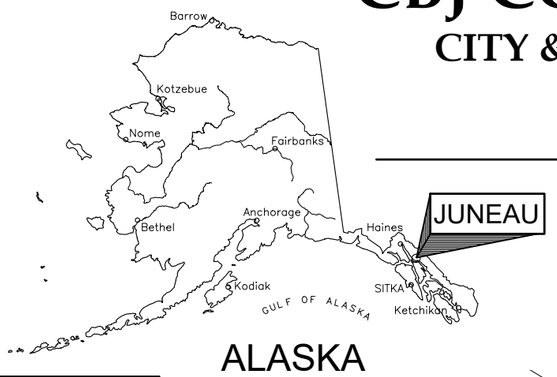

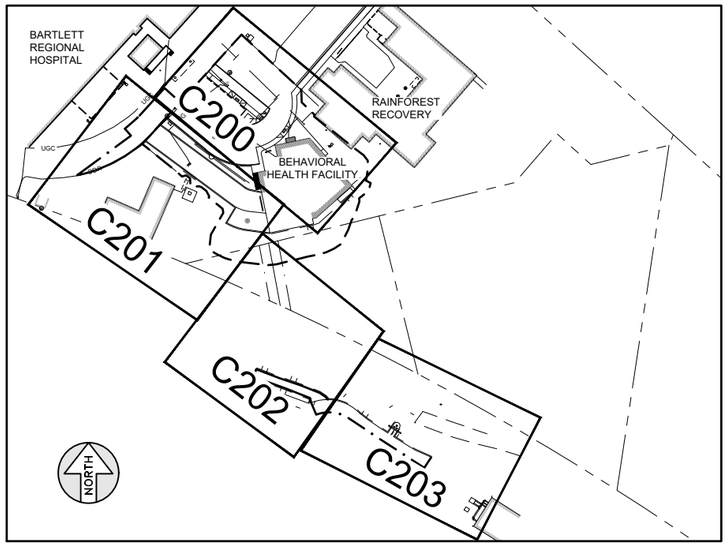

SHEET KEY MAP

N.T.S.

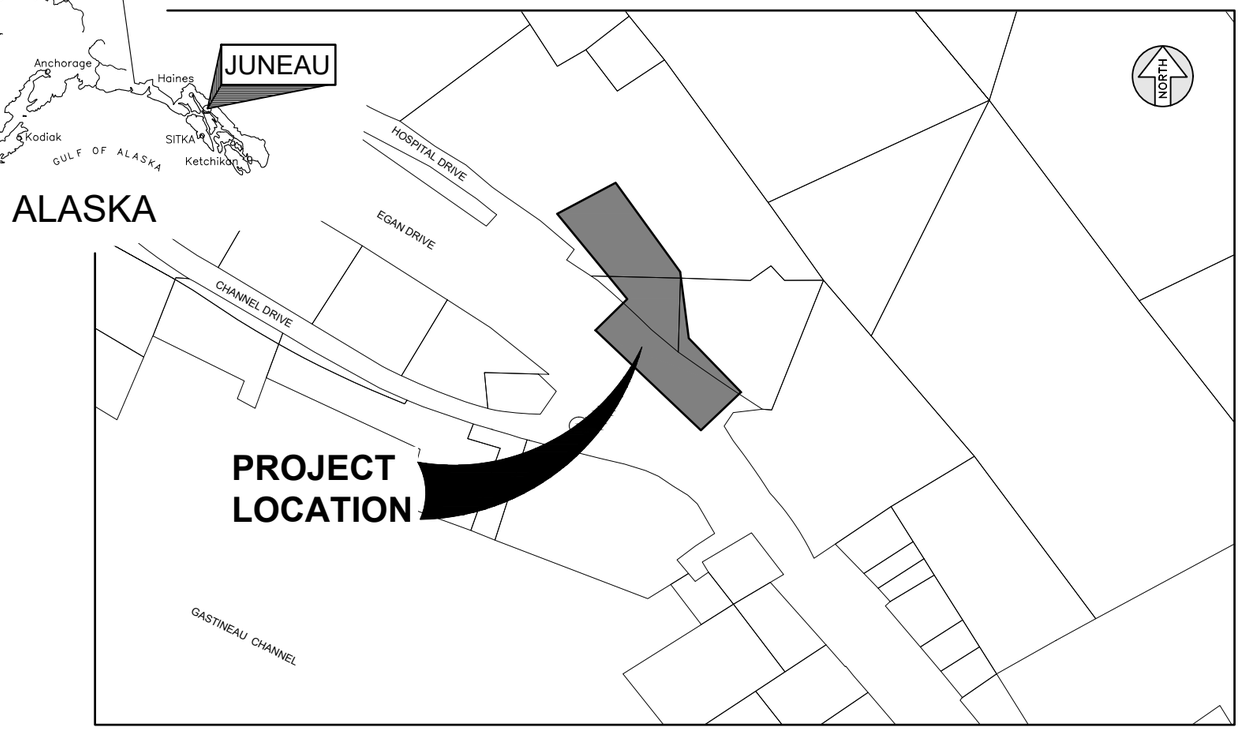

PROJECT LOCATION MAP

200' 0 100' 200' 400'

GRAPHIC SCALE

DESIGN	JMP
DRAWN	JMK
CHECK	JMP
APPROVED	JMP
FILE:	

No.	DATE	REVISION

CITY AND BOROUGH OF JUNEAU
ALASKA'S CAPITAL CITY
ENGINEERING & PUBLIC WORKS DEPARTMENT

PDC ENGINEERS
PLAN • DESIGN • CONSTRUCT
A RESPEC COMPANY
9109 Mendenhall Mall Rd. Ste. 4, Juneau, AK 99801
907.780.6060 | AECC605

STATE OF ALASKA
49TH
JOSEPH M. PUSICH
CE 8152
REGISTERED PROFESSIONAL ENGINEER
12/17/2021

BARTLETT REGIONAL HOSPITAL
WATER AND SEWER UPGRADES

CBJ CONTRACT No. BE22-185
CITY & BOROUGH OF JUNEAU, ALASKA

COVER SHEET

DATE: Dec 17, 2021
PDC No. 21285JN

SHEET
C001

N:\Projects\0323.21285-CBJ_BRH_RRC\C\C0001cnst-21285JN.dwg PLOT: December 17, 2021 at: 10:42am

GENERAL CONSTRUCTION NOTES

1. CBJ ENGINEERING STANDARD DETAILS BOOK FOR CIVIL ENGINEERING PROJECTS AND SUBDIVISION IMPROVEMENTS DATED AUGUST, 2011 AND CBJ ENGINEERING STANDARD SPECIFICATIONS DATED DECEMBER, 2003 ARE MADE A PART OF THIS CONTRACT, WITH CURRENT REVISIONS AS APPLICABLE.
2. LARGE BOULDERS, HARDPAN, STUMPS, LOGS, ORGANICS AND GROUNDWATER MAY BE ENCOUNTERED AT VARIOUS DEPTHS DURING TRENCHING, DITCHING AND ROADWAY EXCAVATION OPERATIONS. THESE MATERIALS SHALL BE DISPOSED OF AS REQUIRED BY THE ENGINEER.
3. GRADES AND ALIGNMENTS SHOWN ON THESE PLANS ARE SUBJECT TO MINOR REVISIONS AS APPROVED BY THE ENGINEER.
4. LOCATION OF WATER SYSTEM IMPROVEMENTS, SANITARY SEWER MANHOLES, PIPING AND PIPE LENGTHS ARE SUBJECT TO MINOR REVISIONS AS APPROVED BY THE ENGINEER.
5. LOCATIONS OF EXISTING UNDERGROUND SEWER, WATER, TELEPHONE, CABLE TELEVISION, AND POWER UTILITIES SHOWN ON THESE PLANS WERE DERIVED FROM CBJ AS-BUILTS OR FIELD LOCATES. ACTUAL LOCATIONS MAY VARY FROM THOSE SHOWN. THE CONTRACTOR IS RESPONSIBLE FOR LOCATING, PROTECTING AND MAINTAINING THE UTILITIES THROUGHOUT THE CONSTRUCTION OF THIS PROJECT. ANY DAMAGE RESULTING TO THESE UNDERGROUND UTILITIES DURING CONSTRUCTION SHALL BE PAID FOR BY THE CONTRACTOR AND SHALL BE CONSIDERED INCIDENTAL TO THE CONTRACT. CALL "DIAL BEFORE YOU DIG" @ 586-1333 FOR UNDERGROUND UTILITY LOCATES AND 811 ALASKA DIG LINE FOR ACS AND GCI PRIOR TO ANY EXCAVATION ACTIVITIES.
6. CONTRACTOR SHALL ASSURE GARBAGE PICKUP, DAILY MAIL SERVICE, FUEL AND SERVICE DELIVERIES WILL BE UNINTERRUPTED TO ALL FACILITIES AFFECTED BY THIS PROJECT.
7. PROPERTY LINE LOCATIONS USED IN THESE PLANS WERE DERIVED FROM RECORD PLATS AND DO NOT REPRESENT A SUBDIVISION BOUNDARY SURVEY.
8. THE CONTRACTOR SHALL DELIVER ALL ASPHALT PAVEMENT REMOVED FROM THIS PROJECT TO A STOCKPILE AREA IN THE CBJ LEMON CREEK PIT TO BE DESIGNATED BY THE ENGINEER. CONTACT THE CBJ PIT MANAGER, MICHAEL EICH, 586-0800 EXT 4192, FOR THE EXACT LOCATION OF THE STOCKPILE AREA.
9. ALL ITEMS DESIGNATED TO BE REMOVED SHALL BE DISPOSED OF AT AN APPROVED DISPOSAL SITE, EXCEPT AS NOTED IN THE CONTRACT DOCUMENTS.
10. ONLY HORIZONTAL ELBOW FITTINGS (BENDS) ARE SHOWN ON THE PLANS. ADDITIONAL FITTINGS WILL BE REQUIRED FOR VERTICAL DEFLECTIONS NEAR CONNECTION TO EXISTING PIPES, AND AT OTHER LOCATIONS REQUIRING GRADE CHANGES TO AVOID CONFLICTS.
11. THE CONTRACTOR SHALL NOT STORE MATERIALS OR EQUIPMENT OR OPERATE EQUIPMENT WITH ITS TRACKS OR WHEELS PLACED ON PRIVATE PROPERTY WITHOUT WRITTEN APPROVAL OF THE PROPERTY OWNER.
12. THE CONTRACTOR SHALL NOTIFY CBJ WATER UTILITIES OPERATOR LONI VANKIRK (723-4975) OF PROPOSED WATER SERVICE INTERRUPTIONS AND SUBMIT THE "WATER SYSTEM SPECIAL USE PERMIT" (COSIGNED BY THE ENGINEER) AT LEAST 72-HOURS PRIOR TO SHUTDOWN OR FLUSHING OF MAINLINE WATER PIPE. NO WATER SERVICE INTERRUPTION MAY PROCEED UNTIL THIS APPROVAL IS OBTAINED.
13. CONTRACTOR SHALL REFERENCE ALL EXISTING PROPERTY CORNER MONUMENTS (I.E. BRASS CAP MONUMENTS, REBARS OR CHISELED X'S) PRIOR TO CONSTRUCTION THAT WILL BE DISTURBED DURING HIS WORK, AND REMONUMENT AFTER CONSTRUCTION OPERATIONS. ALL WORK SHALL BE DONE BY, OR UNDER THE DIRECTION OF, AN ALASKA REGISTERED LAND SURVEYOR. ALL EXISTING PROPERTY CORNERS ARE NOT NECESSARILY SHOWN ON THE PLANS.
14. THE PLAN DRAWINGS DO NOT NECESSARILY SHOW ALL TREES AND SHRUBS THAT MAY BE ENCOUNTERED DURING CONSTRUCTION ACTIVITIES. NO TREES, SHRUBS OR LANDSCAPING ARE TO BE REMOVED OR DAMAGED, UNLESS SHOWN ON THE DRAWINGS OR DIRECTED BY THE ENGINEER.
15. AEL&P, ACS AND GCI MAY CONDUCT WORK WITHIN THE PROJECT LIMITS TO RELOCATE UTILITIES AND TO UPGRADE THEIR RESPECTIVE SYSTEMS. THE CONTRACTOR SHALL COORDINATE ITS ACTIVITIES WITH EACH UTILITY COMPANY AND PROVIDE ACCESS AS NECESSARY FOR UTILITY COMPANIES TO COMPLETE THEIR WORK.
16. "JUMPING JACK", OR SIMILAR TYPE COMPACTORS SHALL BE USED FOR COMPACTION WITHIN 18-INCHES OF ALL WATER VALVE BOXES, CATCH BASINS AND MANHOLES.
17. THE USE OF GROUT AND QUICKSET CEMENT PRODUCTS WITH ADJUSTING RINGS, BRICKS, WOOD, STONES AND OTHER SIMILAR GRADE ADJUSTMENT DEVICES TO SUPPORT MANHOLE FRAMES OVER MANHOLES WILL NOT BE PERMITTED ON THIS PROJECT. SANITARY SEWER MANHOLES SHALL BE ADJUSTED PER CBJ STANDARD SPECIFICATIONS 02402 - SANITARY SEWER MANHOLES AND CLEANOUTS.
18. CONTRACTOR SHALL VERIFY LOCATION AND DEPTH OF EXISTING WATER AND SEWER PIPES, INCLUDING ALL SERVICES ALONG THE STORM DRAIN AND WATER PIPE ALIGNMENTS TO DETERMINE PIPE INSULATION LOCATIONS AND TO ENSURE DAMAGE DOES NOT OCCUR TO THE SERVICE PIPES.
19. WATER PIPES WILL REQUIRE MORE THAN 60-INCHES OF COVER IN AREAS WHERE STORM DRAINAGE PIPES ARE CLOSE TO OR BELOW A DEPTH OF 60-INCHES TO INVERT. DEPTHS OF ALL STORM DRAINAGE PIPES SHALL BE DETERMINED PRIOR TO INSTALLING WATER PIPES TO ENSURE CONFLICTS BETWEEN THESE PIPES DO NOT OCCUR. A MINIMUM CLEARANCE OF 8-INCHES SHALL BE OBTAINED BETWEEN WATER AND OTHER PIPES.
20. ALL MATERIALS PROPOSED FOR THE WATER SYSTEM THAT COME IN DIRECT CONTACT WITH THE WATER SHALL BE CERTIFIED BY AN ANSI ACCREDITED ORGANIZATION TO CONFORM WITH ANSI/NSF STANDARD 61 OR AN ANSI/NSF STANDARD WITH EQUIVALENT HEALTH REQUIREMENTS.
21. THE MATERIALS USED FOR THIS PROJECT SHALL COMPLY WITH THE NEW LEAD FREE REQUIREMENTS INCLUDING NOT MORE THAN 0.2% WHEN USED WITH RESPECT TO SOLDER AND FLUX AND NOT MORE THAN A WEIGHTED AVERAGE OF 0.25% LEAD WHEN USED WITH RESPECT TO THE WETTED SURFACES OF PIPE, PIPE FITTINGS AND FIXTURES.

COORDINATION NOTES

1. BRH BEHAVIORAL HEALTH FACILITY BE21-149 IS CURRENTLY UNDER CONSTRUCTION. DAWSON CONSTRUCTION IS THE GENERAL CONTRACTOR. SUBSTANTIAL COMPLETION DATE IS SEPTEMBER 17, 2022. THIS CONTRACTOR SHALL COORDINATE WITH DAWSON CONSTRUCTION ON THE INSTALLATION OF NEW WATER AND SANITARY SEWER IMPROVEMENTS WITH AND AROUND THE BRHBHF PROJECT. CONTACT JASON SABON WITH DAWSON AT 419-8175.
2. HOSPITAL DRIVE RECONSTRUCTION BE20-146 IS CURRENTLY UNDER CONSTRUCTION. ADMIRALTY CONSTRUCTION IS THE GENERAL CONTRACTOR. THIS CONTRACTOR SHALL COORDINATE WITH ADMIRALTY CONSTRUCTION ON THE INSTALLATION OF NEW WATER AND SANITARY SEWER IMPROVEMENTS WITH AND AROUND THE HOSPITAL DRIVE RECONSTRUCTION PROJECT. CONTACT ANDREW CAMPBELL WITH ADMIRALTY AT 321-2265.
3. BARTLETT REGIONAL HOSPITAL SITE IMPROVEMENTS E21-164-146 IS CURRENTLY UNDER CONSTRUCTION. ADMIRALTY CONSTRUCTION IS THE GENERAL CONTRACTOR. THIS CONTRACTOR SHALL COORDINATE WITH ADMIRALTY CONSTRUCTION ON THE INSTALLATION OF NEW WATER AND SANITARY SEWER IMPROVEMENTS WITH AND AROUND THE BARTLETT REGIONAL HOSPITAL SITE IMPROVEMENTS PROJECT. CONTACT ANDREW CAMPBELL WITH ADMIRALTY AT 321-2265.

ABBREVIATIONS

AC	ASBESTOS CEMENT	TBM	TEMPORARY BENCH MARK
ACS	ALASKA COMMUNICATIONS SYSTEMS	TC	TOP OF CONCRETE
AEL&P	ALASKA ELECTRIC LIGHT & POWER	TCP	TRAFFIC CONTROL PLAN
APPROX	APPROXIMATE	TOB	TOP OF BANK
BHF	BEHAVIORAL HEALTH FACILITY	TOP	TOP OF PIPE
BRHBHF	BARTLETT REGIONAL HOSPITAL BEHAVIORAL HEALTH FACILITY	TYP	TYPICAL
		UST	UNDERGROUND STORAGE TANK
CB	CATCH BASIN	VERT	VERTICAL
CBJ	CITY & BOROUGH OF JUNEAU	W/	WITH
CHB	CHORD BEARING		
CHL	CHORD LENGTH		
CL	CENTERLINE		
CI	CAST IRON		
CLR	CLEAR		
CMP	CORRUGATED METAL PIPE		
CONC	CONCRETE		
CONT	CONTINUOUS		
CPP	CORRUGATED POLYETHYLENE PIPE		
CTE	CONNECT TO EXISTING		
DEPT	DEPARTMENT		
DI	DUCTILE IRON		
DIP	DUCTILE IRON PIPE		
DIA	DIAMETER		
DOT&PF	DEPARTMENT OF TRANSPORTATION & PUBLIC FACILITIES		
E	EASTING		
(E)	EXISTING		
EG	EXISTING GRADE		
EJIW	EAST JORDAN IRON WORKS		
EL	ELEVATION		
EP	EDGE OF PAVEMENT		
EXIST	EXISTING		
EXP	EXPANSION		
FDC	FIRE DEPARTMENT CONNECTION		
FG	FINISH GRADE		
FH	FIRE HYDRANT		
FL	FLOW LINE		
FRP	FIBER REINFORCED PLASTIC		
GCI	GENERAL COMMUNICATION INC.		
GV	GATE VALVE		
HDPE	HIGH DENSITY POLYETHYLENE		
IE	INVERT ELEVATION		
L	LENGTH		
LP	LOW POINT		
LT	LEFT		
MAX	MAXIMUM		
MIN	MINIMUM		
MJ	MECHANICAL JOINT		
MTE	MATCH TO EXISTING		
N	NORTHING		
N/A	NOT APPLICABLE		
NF	NEENAH FOUNDRY COMPANY		
NIC	NOT IN CONTRACT		
NFS	NON-FROST SUSCEPTIBLE		
No.	NUMBER		
NTS	NOT TO SCALE		
OC	ON CENTER		
OFCO	OLYMPIC FOUNDRY CO.		
PERF	PERFORATED		
P/L	PROPERTY LINE		
PP	POWER POLE		
PVC	POLYVINYL CHLORIDE		
R	RADIUS		
ROW	RIGHT-OF-WAY		
RP	RADIUS POINT		
RT	RIGHT		
SDMH	STORM DRAIN MANHOLE		
SS	SANITARY SEWER		
SSCO	SANITARY SEWER CLEANOUT		
SSMH	SANITARY SEWER MANHOLE		
STA	STATION		
STD	STANDARD		
SWPPP	STORM WATER POLLUTION PREVENTION PLAN		

SYMBOLS

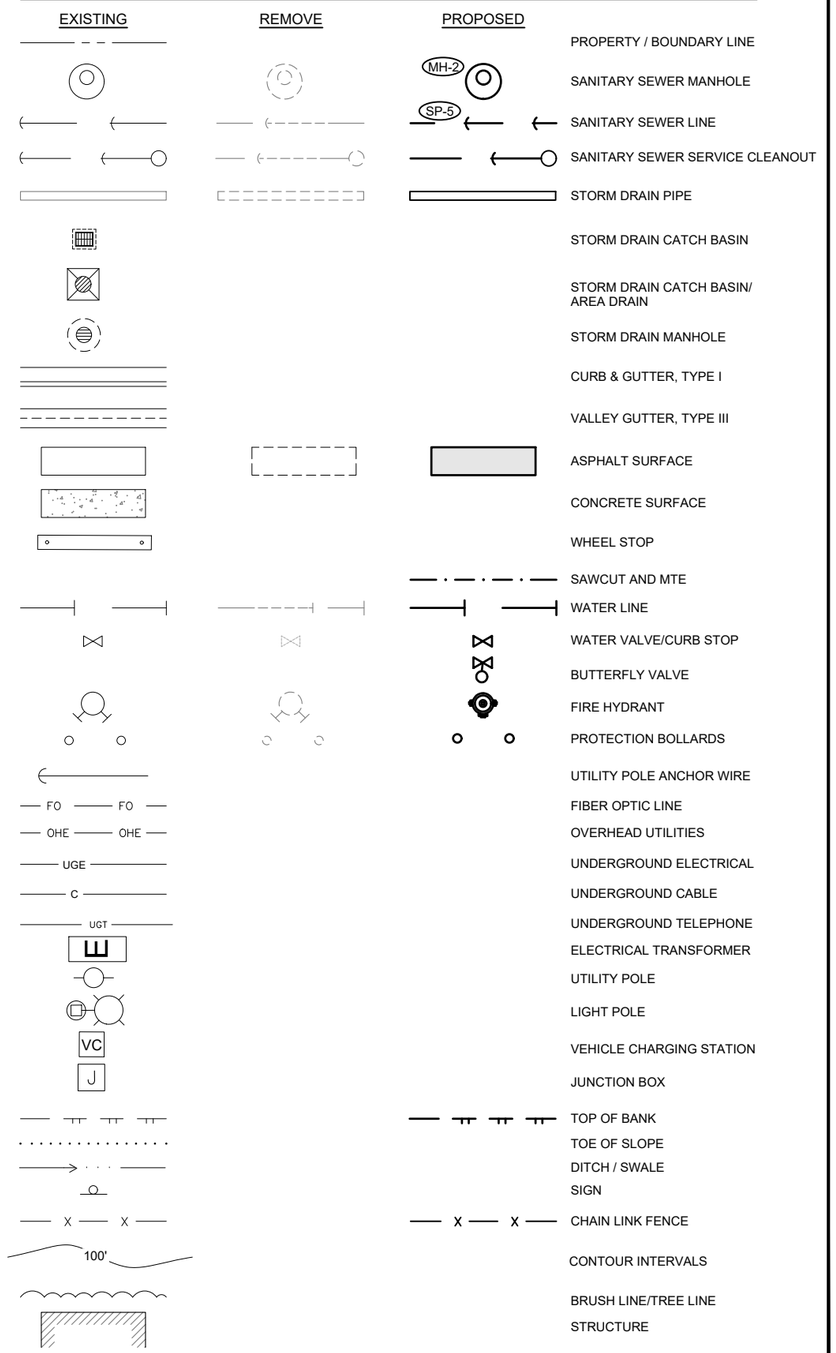

PROPERTY / BOUNDARY LINE
SANITARY SEWER MANHOLE
SANITARY SEWER LINE
SANITARY SEWER SERVICE CLEANOUT
STORM DRAIN PIPE
STORM DRAIN CATCH BASIN
STORM DRAIN CATCH BASIN/ AREA DRAIN
STORM DRAIN MANHOLE
CURB & GUTTER, TYPE I
VALLEY GUTTER, TYPE III
ASPHALT SURFACE
CONCRETE SURFACE
WHEEL STOP
SAWCUT AND MTE
WATER LINE
WATER VALVE/CURB STOP
BUTTERFLY VALVE
FIRE HYDRANT
PROTECTION BOLLARDS
UTILITY POLE ANCHOR WIRE
FIBER OPTIC LINE
OVERHEAD UTILITIES
UNDERGROUND ELECTRICAL
UNDERGROUND CABLE
UNDERGROUND TELEPHONE
ELECTRICAL TRANSFORMER
UTILITY POLE
LIGHT POLE
VEHICLE CHARGING STATION
JUNCTION BOX
TOP OF BANK
TOE OF SLOPE
DITCH / SWALE
SIGN
CHAIN LINK FENCE
CONTOUR INTERVALS
BRUSH LINE/TREE LINE
STRUCTURE

N:\Projects\03\23.21285-CBJ_BRH_RRC\CC\0001cmd-21285JN.dwg PLOT: December 17, 2021 at: 10:42am

DESIGN JMP
DRAWN JMK
CHECK JMP
APPROVED JMP
FILE:

No.	DATE	REVISION

CITY AND BOROUGH OF JUNEAU
ALASKA'S CAPITAL CITY
ENGINEERING & PUBLIC WORKS DEPARTMENT

PDC ENGINEERS
PLAN • DESIGN • CONSTRUCT
A BESPEC COMPANY
9109 Mendenhall Mall Rd. Ste. 4, Juneau, AK 99801
907.780.6060 | AECC605

STATE OF ALASKA 49TH
JOSEPH M. PUSICH
CE 8152
REGISTERED PROFESSIONAL ENGINEER
12/17/2021

BARTLETT REGIONAL HOSPITAL
WATER AND SEWER UPGRADES

CBJ CONTRACT No. BE22-185
CITY & BOROUGH OF JUNEAU, ALASKA

GENERAL NOTES, ABBREVIATIONS & SYMBOLS

DATE: Dec 17, 2021
PDC No. 21285JN

SHEET
C002

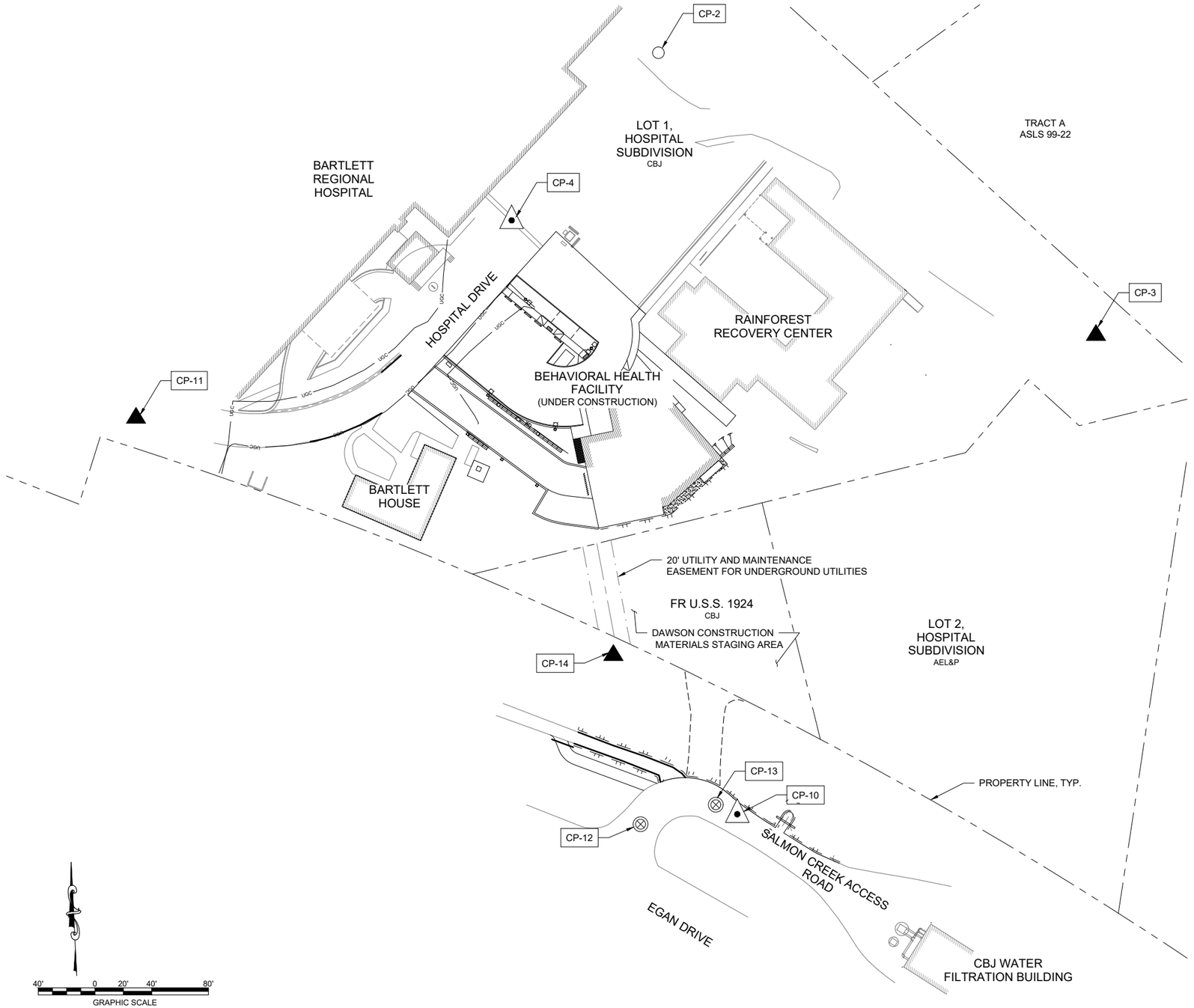

GENERAL NOTES:

1. HORIZONTAL FOR THIS SURVEY WERE BASED ON ASSUMED COORDINATES FOR CP-1 WITH N-10,000 E-10,000 POSITION AND 100.00' ELEVATION.
2. VERTICAL CONTROL IS BASED ON (CP-1) HAVING AN ASSUMED ELEVATION OF 100.00'
3. DATE OF FIELD SURVEY WAS OCTOBER 11 & 14, 2019 AND JULY 13-14, 2021.
4. FIELD WORK CONDUCTED USING A TRIMBLE S7 ROBOTIC TOTAL STATION WITH STANDARD LASER RANGING TECHNIQUES.
5. NO BOUNDARY RETRACEMENT WAS PERFORMED IN THE COURSE OF THIS SURVEY.
6. UNDERGROUND UTILITIES, SHOWN HEREON, ARE DERIVED FROM UNDERGROUND UTILITY FIELD LOCATES, AS-BUILT INFORMATION, AND OBSERVABLE ABOVE GROUND APPURTENANCES.
7. SITE LIGHTING UNDERGROUND CONDUITS NOT FIELD LOCATED AND NO AS-BUILTS RECORDS WERE AVAILABLE.
8. CONTRACTOR SHALL PERFORM HORIZONTAL AND VERTICAL CONTROL VERIFICATION OF PROJECT CONTROL PRIOR TO BEGINNING CONSTRUCTION. ANY DISCREPANCIES SHALL BE BROUGHT TO THE ENGINEER'S ATTENTION FOR RESOLUTION.

LEGEND

- DOT/PF CENTERLINE MONUMENT (RECOVERED)
- MAG NAIL (ESTABLISHED)
- SURVEY SPIKE (ESTABLISHED)

HORIZONTAL AND VERTICAL CONTROL POINT TABLE

POINT No.	NORTHING	EASTING	ELEVATION	DESCRIPTION
CP-2	10115.77	9957.83	104.48	5/8" REBAR
CP-3	9916.49	10266.39	0.00	MAG NAIL
CP-4	9997.52	9854.28	99.62	SURVEY SPIKE
CP-10	9578.58	10013.45	61.55	SURVEY SPIKE
CP-11	9858.10	9589.36	103.77	MAG NAIL
CP-12	9571.52	9945.24	61.86	DOT CL MON
CP-13	9585.26	9998.33	61.41	DOT CL MON
CP-14	9690.72	9926.06	65.86	MAG NAIL

N:\Projects\0323.21285-CBJ_BRH_RRC\C\C0002cnst-21285JN.dwg PLOT: December 17, 2021 at: 10:42am

DESIGN JMP
DRAWN JMK
CHECK JMP
APPROVED JMP
FILE:

No.	DATE	REVISION

CITY AND BOROUGH OF JUNEAU
ALASKA'S CAPITAL CITY
ENGINEERING & PUBLIC WORKS DEPARTMENT

PDC ENGINEERS
PLAN • DESIGN • CONSTRUCT
A RESPEC COMPANY
9109 Mendenhall Mall Rd. Ste. 4, Juneau, AK 99801
907.780.6060 | AECC605

STATE OF ALASKA
49TH
JOSEPH M. PUSICH
CE 8152
REGISTERED PROFESSIONAL ENGINEER
12/17/2021

BARTLETT REGIONAL HOSPITAL
WATER AND SEWER UPGRADES

CBJ CONTRACT No. BE22-185
CITY & BOROUGH OF JUNEAU, ALASKA

SURVEY CONTROL DIAGRAM

DATE: Dec 17, 2021
PDC No. 21285JN

SHEET
C003

TRAFFIC CONTROL NOTES:

1. THESE PLANS GENERALLY DEPICT THE CONSTRUCTION WITHIN AND ADJACENT TO HOSPITAL DRIVE AND SALMON CREEK ACCESS ROAD. ALL TRAFFIC CONTROL OPERATIONS SHALL BE IMPLEMENTED IN ACCORDANCE WITH THE LATEST EDITION OF THE ALASKA TRAFFIC MANUAL AND THE MUTCD. THE FINAL TCP PLANS SHALL BE COMPLETED BY THE CONTRACTOR AND APPROVED BY ADOT&PF. THE CONTRACTOR SHALL SUBMIT THE TCP PLAN TO THE ADOT&PF FOR APPROVAL A MINIMUM OF TEN (10) DAYS BEFORE BEGINNING CONSTRUCTION.
2. ALL TRAFFIC CONTROL ELEMENTS SHALL BE MAINTAINED 24 HOURS A DAY. ALL SIGNS SHALL BE FABRICATED IN ACCORDANCE WITH THE ALASKA SIGN SPECIFICATIONS AND THE LATEST EDITION OF THE MUTCD.
3. ALL CONSTRUCTION SIGNING SHALL REMAIN IN PLACE UNTIL THE CONDITIONS IN WHICH THEY DELINEATE NO LONGER EXIST.
4. THE CONTRACTOR SHALL CONDUCT OPERATIONS TO MINIMIZE INTERFERENCE WITH TRAFFIC ON HOSPITAL DRIVE AND SALMON CREEK ACCESS ROAD.
5. THE CONTRACTOR SHALL PROVIDE VEHICULAR ACCESS THROUGH THE WORK ZONES ALONG HOSPITAL DRIVE AND SALMON CREEK ACCESS ROAD AT ALL TIMES.
6. TEMPORARY PAVEMENT TRANSITIONS SHALL BE CONSTRUCTED AT ALL VERTICAL DROPS OF 1-1/2" OR GREATER IN THE TRAVEL LANE.
7. TRAFFIC CONTROL PLANS ARE SCHEMATIC IN NATURE. CONTRACTOR SHALL SUPPLY BARRIERS, MARKERS, AND SIGNAGE FOR TRAFFIC CONTROL OPERATIONS AS REQUIRED BY THE LATEST EDITION OF THE ALASKA TRAFFIC MANUAL STANDARDS AND MUTCD.
8. TEMPORARY TRAFFIC LANES THROUGH WORK AREAS SHALL BE A MINIMUM WIDTH OF 11'
9. A MINIMUM OF ONE LANE SHALL BE MAINTAINED AT ALL TIMES AT WORK AREAS.
10. BARTLETT HOSPITAL EMERGENCY DROP-OFF LANES SHALL NOT BE BLOCKED AT ANY TIME AND SHALL REMAIN OPEN AT ALL TIMES.
11. TYPE "B" WARNING LIGHTS SHALL BE PLACED ON THE "ROAD WORK AHEAD" (CW20-100F) SIGNS DURING NIGHT TIME CONSTRUCTION.
12. TYPE "A" FLASHING WARNING LIGHTS SHALL BE USED TO MARK THE TYPE III BARRICADES, TYPE II BARRICADES, DRUMS, AND ROAD CLOSURE ADVANCED SIGNING AT NIGHT. WHEN BARRICADES OR DRUMS ARE USED FOR CHANNELIZING TRAFFIC, TYPE "C" STEADY BURN WARNING LIGHTS SHALL BE USED.
13. TRAVEL LANES AND PEDESTRIAN CROSSINGS WITHIN THE PROJECT LIMITS SHALL BE FLAGGED WHEN CROSSED BY CONSTRUCTION EQUIPMENT.
14. COVER DIRECTIONAL LANE SIGNS (R3-5 & R3-6 SERIES) THAT CONTRADICT THE MOVEMENT RESTRICTIONS IN THE TCP.
15. PROVIDE A CLEARLY MARKED TEMPORARY PEDESTRIAN ROUTE FOR THE EGAN DRIVE PEDESTRIAN PATH AT ALL TIMES. IN ACTIVE CONSTRUCTION ZONES, TEMPORARY FENCING OR BARRICADES SHALL BE USED TO DELINEATE PEDESTRIAN ROUTES.

PHASING REQUIREMENTS:

A. CONTRACTOR TO PROVIDE 72 HOURS MINIMUM NOTICE TO THE FOLLOWING PARTIES PRIOR TO BEGINNING ANY WATER OR SEWER WORK THAT WILL INVOLVE A UTILITY DISRUPTION OR TEMPORARY SHUTDOWN:

- BARTLETT REGIONAL HOSPITAL: MARC WALKER, 907-796-8888
- BARTLETT HOUSE: MARC WALKER, 907-796-8888
- WILDFLOWER COURT: ZACH FISHER, 907-463-8763 & DAVE ANDERSON, 907-463-8739
- RAINFOREST RECOVERY CENTER: MARC WALKER, 907-796-8888
- CBJ WATER DEPARTMENT: LONI VANKIRK, 907-723-4975
- CBJ WASTEWATER DEPARTMENT: OTTO DUNAYSKI, 907-209-3785
- BARTLETT CBJ PROJECT MANAGER: JEANNE RYAN, 907-586-0800 EXT #2
- DAWSON CONSTRUCTION: JASON SABON, 907-419-8175
- DIPAC: BROCK MEREDITH, 907-463-5114
- ALASKA ELECTRIC LIGHT & POWER: BRYAN FARREL, 907-463-6339

B. WATER SERVICE TO BARTLETT HOUSE SHALL BE CONNECTED TO EXISTING AFTER NORMAL BUSINESS HOURS. BARTLETT HOUSE MAINTENANCE STAFF SHALL BE NOTIFIED IN WRITING 72-HOURS BEFORE WORK BEGINS. BARTLETT HOUSE WATER OUTAGE LIMITED TO 4 HOURS. COORDINATE WITH CBJ WATER DEPARTMENT.

C. TEMPORARY WATER SHALL BE SUPPLIED TO BARTLETT HOSPITAL, BARTLETT HOUSE, RAINFOREST RECOVERY AND WILDFLOWER COURT DURING TIE-IN OF THE NEW 16" HDPE TO EXISTING 12" DI WATER PIPE. IT IS ASSUMED THAT THE WATERLINE TIE-IN WILL COINCIDE WITH THE LOWER WATER LINE TIE-IN AT SALMON CREEK ACCESS ROAD AND THAT IT WILL BE A MAXIMUM OF 8 HOURS IN LENGTH. AEL&P HAS IDENTIFIED THAT THE SHUT DOWN OF THE EXISTING 12" DI WATER LINE CAN ONLY TAKE PLACE FOR A MAXIMUM OF 8 HOURS ON ONE DAY. THE EXACT DAY IS NOT KNOWN BUT WILL BE THE WEEK OF MAY 16, 2022 OR WEEK OF MAY 23, 2022. THE DATE AND TIME MUST BE COORDINATED AND CONFIRMED WITH AEL&P.

D. 16" HDPE PIPE TO BE FILLED BY EXTERNAL SUPPLY AND CONTRACTOR TO CAP BOTH ENDS FOR DISINFECTION AND PRESSURE TESTING.

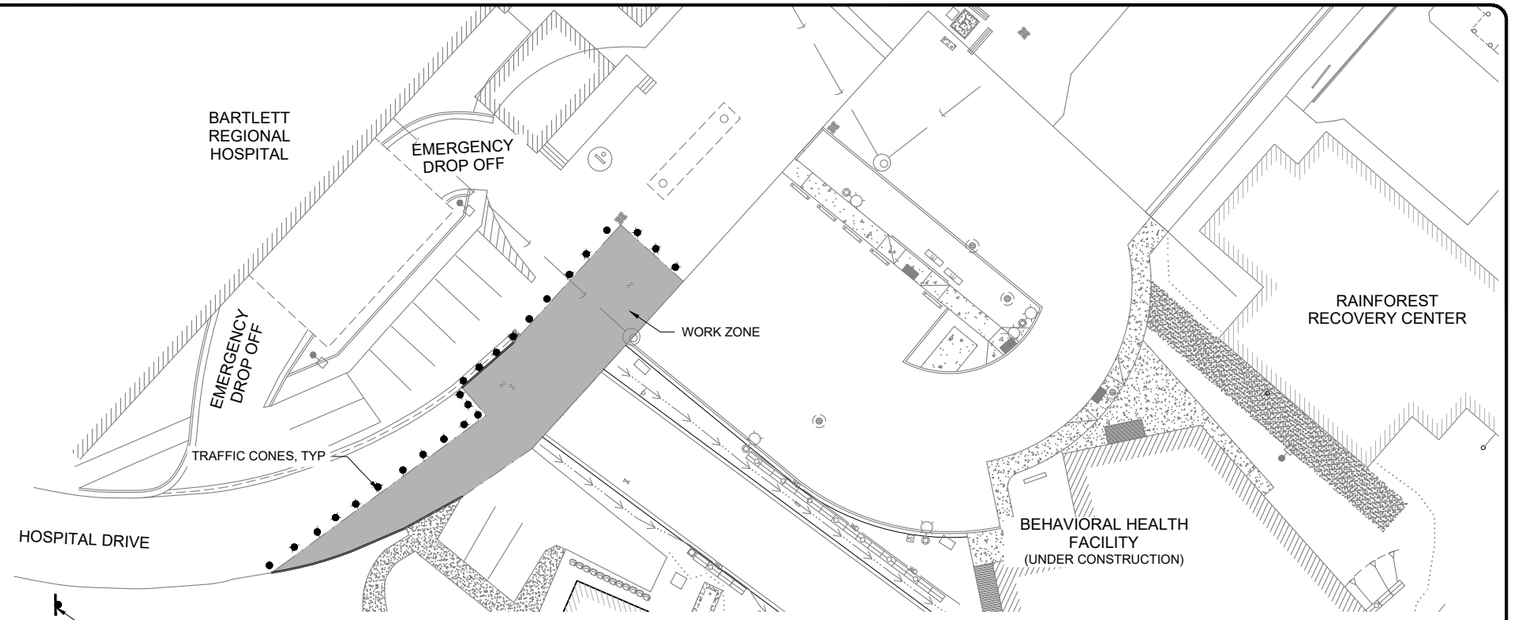

TYPICAL SIDE WORK ZONE TWO LANE ROAD AT HOSPITAL DRIVE*

N.T.S.

*CONTRACTOR TO SUBMIT SPECIFIC TCP TO CBJ FOR APPROVAL

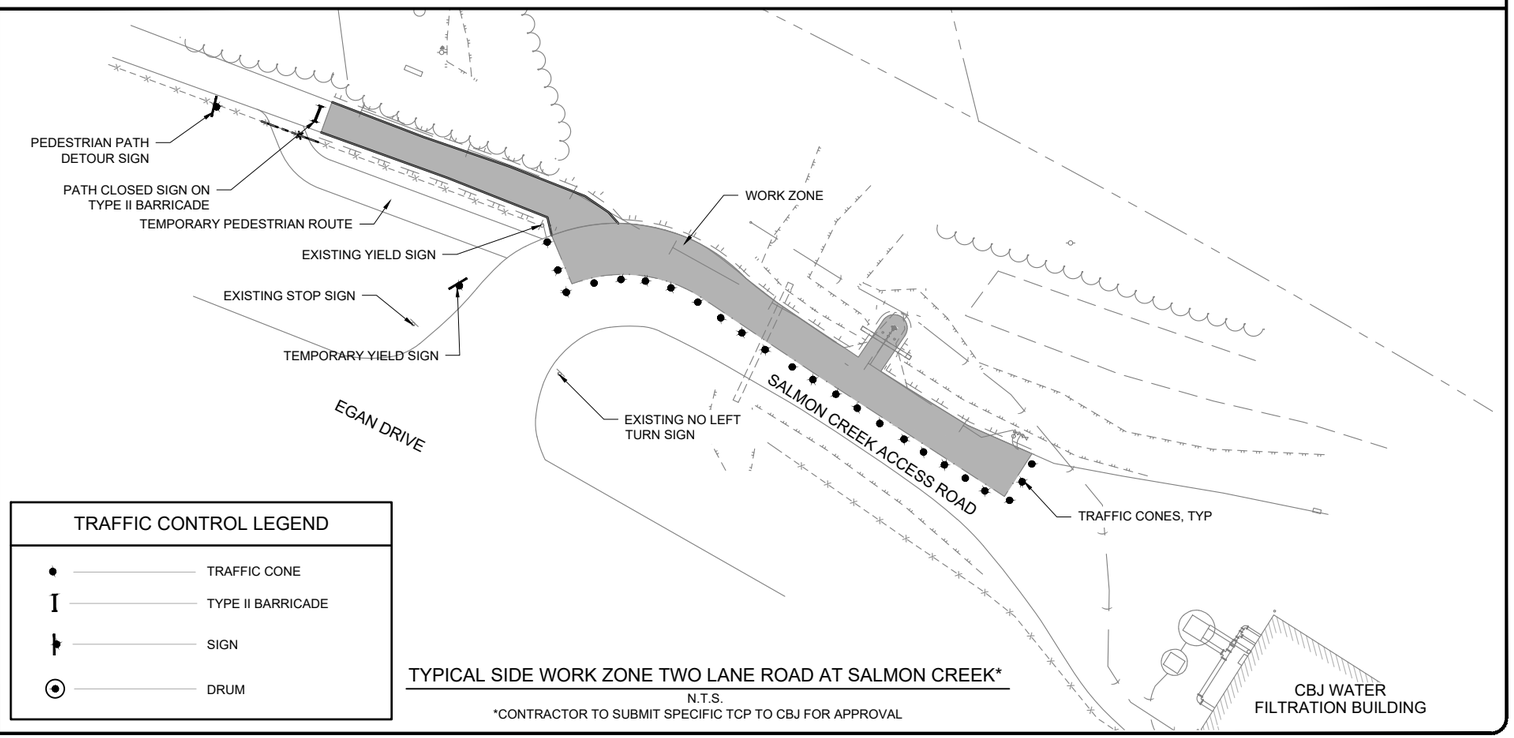

TRAFFIC CONTROL LEGEND

- TRAFFIC CONE
- TYPE II BARRICADE
- SIGN
- DRUM

TYPICAL SIDE WORK ZONE TWO LANE ROAD AT SALMON CREEK*

N.T.S.

*CONTRACTOR TO SUBMIT SPECIFIC TCP TO CBJ FOR APPROVAL

N:\Projects\0323.21285-CBJ_BRH_RRC\CDC\0003cnst-21285JN.dwg PLOT: December 17, 2021 at: 10:42am

DESIGN JMP
DRAWN JMK
CHECK JMP
APPROVED JMP
FILE:

No.	DATE	REVISION

CITY AND BOROUGH OF JUNEAU
ALASKA'S CAPITAL CITY
ENGINEERING & PUBLIC WORKS DEPARTMENT

PDC ENGINEERS
PLAN • DESIGN • CONSTRUCT
A BESPES COMPANY
9109 Mendenhall Mall Rd. Ste. 4, Juneau, AK 99801
907.780.6060 | AECC605

STATE OF ALASKA 49 TH
JOSEPH M. PUSICH
CE 8152
REGISTERED PROFESSIONAL ENGINEER
12/17/2021

BARTLETT REGIONAL HOSPITAL
WATER AND SEWER UPGRADES

CBJ CONTRACT No. BE22-185
CITY & BOROUGH OF JUNEAU, ALASKA

PROJECT PHASING AND TRAFFIC CONTROL NOTES

DATE: Dec 17, 2021
PDC No. 21285JN

SHEET
C004

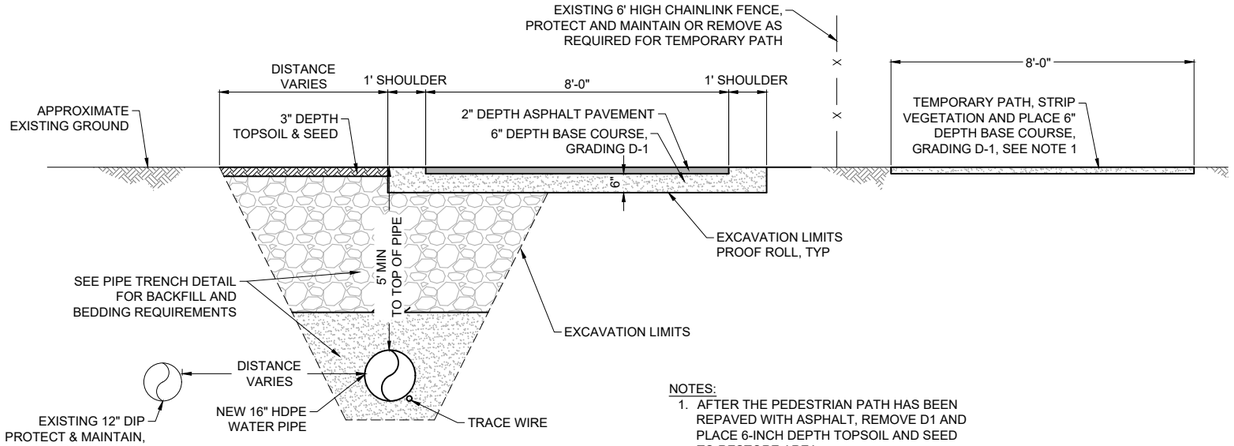

NOTES:
1. AFTER THE PEDESTRIAN PATH HAS BEEN REPAVED WITH ASPHALT, REMOVE D1 AND PLACE 6-INCH DEPTH TOPSOIL AND SEED TO RESTORE AREA.

1 / C100 — EGAN DRIVE ASPHALT PEDESTRIAN PATH TYPICAL SECTION
SCALE: NTS

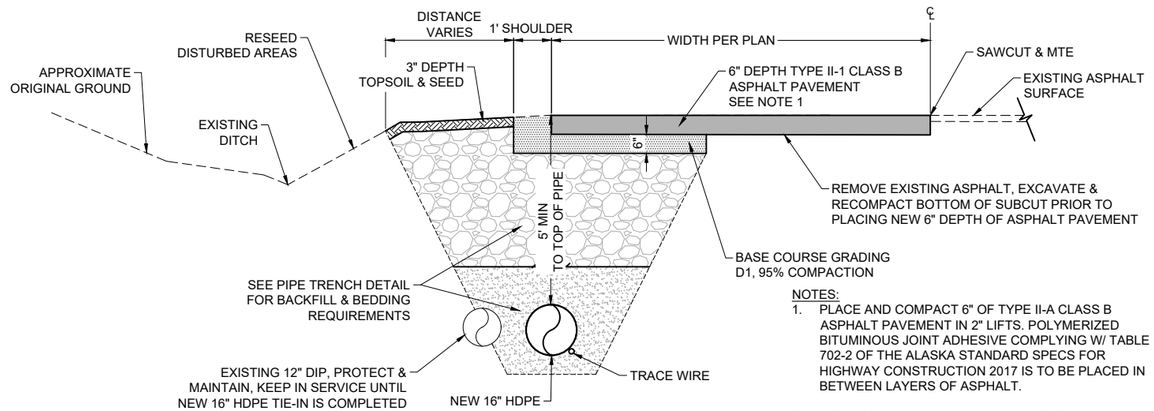

NOTES:
1. PLACE AND COMPACT 6" OF TYPE II-A CLASS B ASPHALT PAVEMENT IN 2" LIFTS. POLYMERIZED BITUMINOUS JOINT ADHESIVE COMPLYING W/ TABLE 702-2 OF THE ALASKA STANDARD SPECS FOR HIGHWAY CONSTRUCTION 2017 IS TO BE PLACED IN BETWEEN LAYERS OF ASPHALT.
2. PROTECT & MAINTAIN THE EXISTING DOT CENTERLINE MONUMENT. SEE PLAN VIEW FOR LOCATION.

2 / C100 — SALMON CREEK ACCESS ROAD TYPICAL SECTION
SCALE: NTS

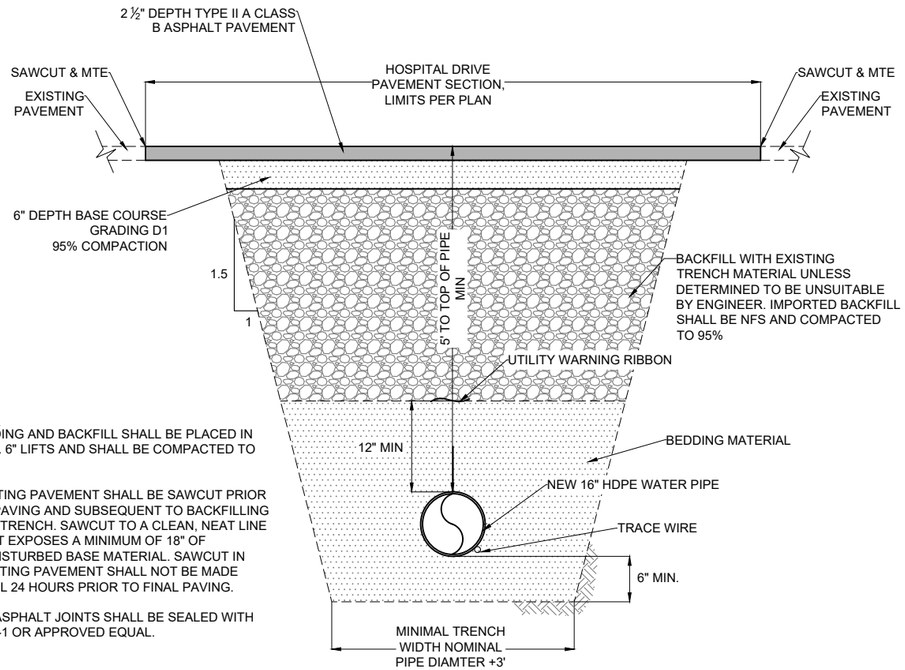

NOTES:
1. BEDDING AND BACKFILL SHALL BE PLACED IN MAX. 6" LIFTS AND SHALL BE COMPACTED TO 95%.
3. EXISTING PAVEMENT SHALL BE SAWCUT PRIOR TO PAVING AND SUBSEQUENT TO BACKFILLING THE TRENCH. SAWCUT TO A CLEAN, NEAT LINE THAT EXPOSES A MINIMUM OF 18" OF UNDISTURBED BASE MATERIAL. SAWCUT IN EXISTING PAVEMENT SHALL NOT BE MADE UNTIL 24 HOURS PRIOR TO FINAL PAVING.
4. ALL ASPHALT JOINTS SHALL BE SEALED WITH CSS-1 OR APPROVED EQUAL.

3 / C100 — 16" HDPE WATER PIPE TRENCH DETAIL - PAVEMENT
SCALE: NTS

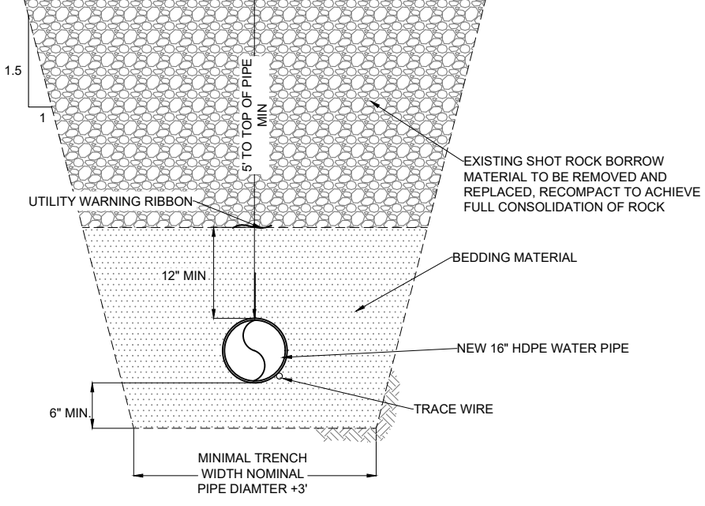

NOTES:
1. BEDDING MATERIAL SHALL BE PLACED IN MAX. 6" LIFTS AND SHALL BE COMPACTED TO 95%.

4 / C100 — 16" HDPE WATER PIPE TRENCH DETAIL - SHOT ROCK IN BHF PROJECT LIMITS
SCALE: NTS

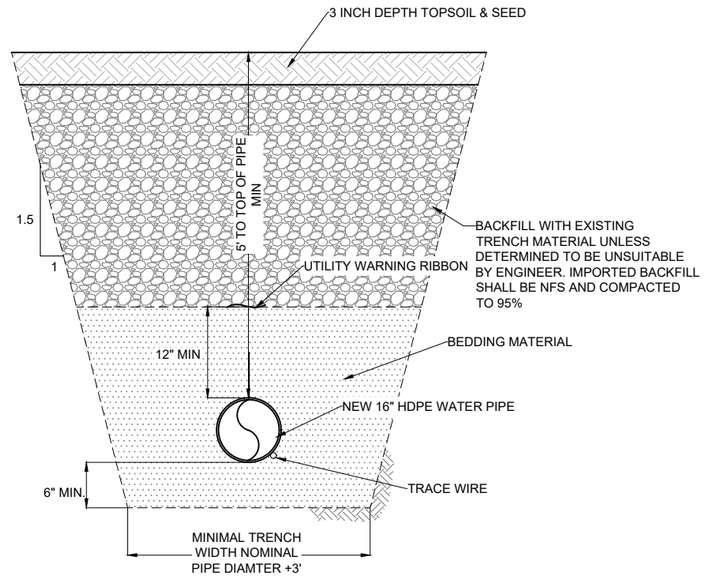

NOTES:
1. BEDDING AND BACKFILL SHALL BE PLACED IN MAX. 6" LIFTS AND SHALL BE COMPACTED TO 95%.

5 / C100 — 16" HDPE WATER PIPE TRENCH DETAIL - TOPSOIL & SEED
SCALE: NTS

DESIGN JMP
DRAWN JMK
CHECK JMP
APPROVED JMP
FILE:

No.	DATE	REVISION

CITY AND BOROUGH OF JUNEAU
ALASKA'S CAPITAL CITY
ENGINEERING & PUBLIC WORKS DEPARTMENT

PDC ENGINEERS
PLAN • DESIGN • CONSTRUCT
A BESPES COMPANY
9109 Mendenhall Mall Rd. Ste. 4, Juneau, AK 99801
907.780.6060 | AECC605

STATE OF ALASKA 49 TH
JOSEPH M. PUSICH
CE 8152
REGISTERED PROFESSIONAL ENGINEER
12/17/2021

BARTLETT REGIONAL HOSPITAL
WATER AND SEWER UPGRADES

CBJ CONTRACT No. BE22-185
CITY & BOROUGH OF JUNEAU, ALASKA

CONSTRUCTION DETAILS

DATE: Dec 17, 2021
PDC No. 21285JN

SHEET
C100

N:\Projects\W323.21285-CBJ_BRH_RRC\C\C4001cnst-21285JN.dwg PLOT: December 17, 2021 at: 10:43am

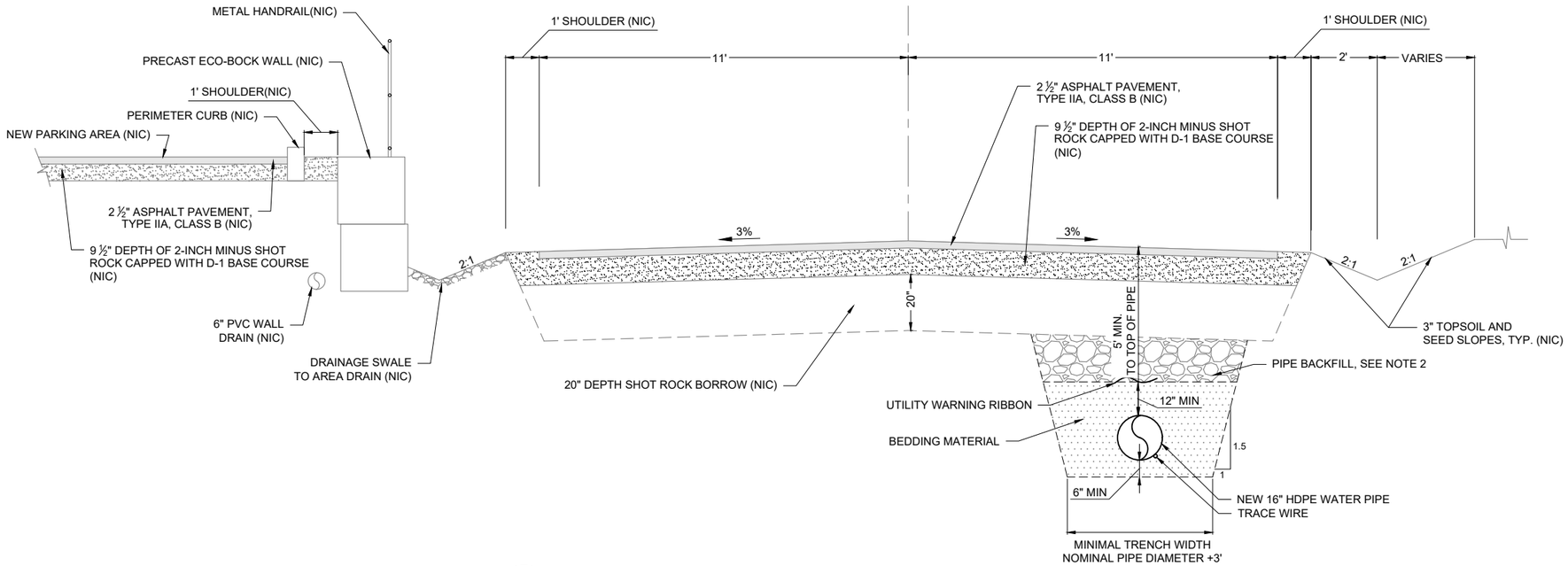

1 / C101 **16" HDPE WATER PIPE TRENCH DETAIL - BHF ACCESS DRIVEWAY**

SCALE: NTS

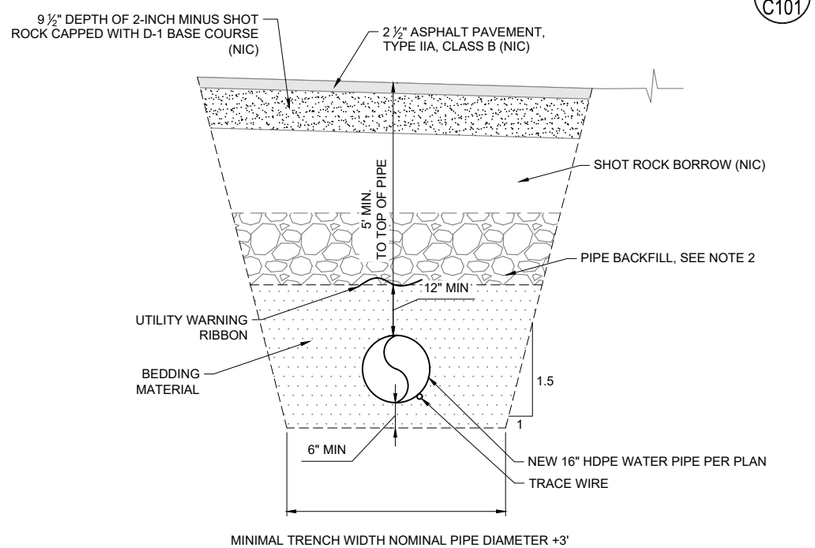

2 / C101 **16" HDPE WATER PIPE TRENCH DETAIL - BHF PAVEMENT SECTION**

SCALE: NTS

TRENCH DETAIL NOTES:

1. BEDDING SHALL BE PLACED IN MAX. 6" LIFTS AND SHALL BE COMPACTED TO 95%.
2. PIPE BACKFILL SHALL BE EXISTING EXCAVATED TRENCH MATERIAL UNLESS OTHERWISE NOTED.
3. EXISTING PAVEMENT SHALL BE SAWCUT PRIOR TO PAVING AND SUBSEQUENT TO BACKFILLING THE TRENCH. SAWCUT TO A CLEAN, NEAT LINE THAT EXPOSES A MINIMUM OF 18" OF UNDISTURBED BASE MATERIAL. SAWCUT IN EXISTING PAVEMENT SHALL NOT BE MADE UNTIL 24 HOURS PRIOR TO FINAL PAVING.
4. ALL ASPHALT JOINTS SHALL BE SEALED WITH CSS-1 OR APPROVED EQUAL.

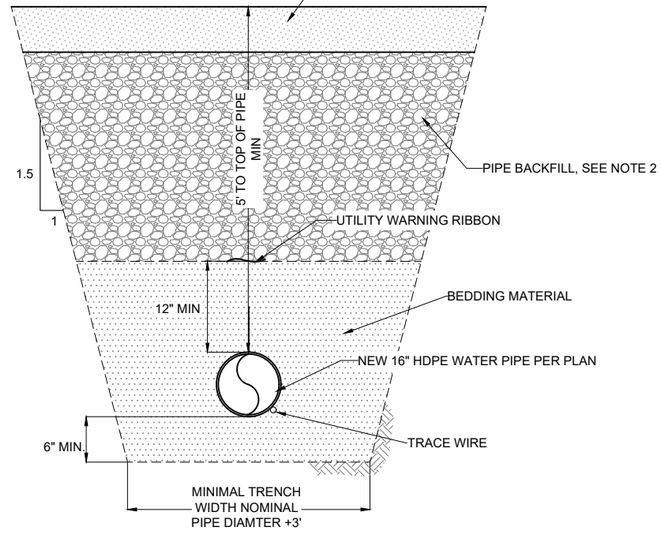

3 / C101 **16" HDPE WATER PIPE TRENCH DETAIL - BASE COURSE SECTION**

SCALE: NTS

DESIGN	JMP
DRAWN	JMK
CHECK	JMP
APPROVED	JMP
FILE:	

No.	DATE	REVISION

CITY AND BOROUGH OF JUNEAU
ALASKA'S CAPITAL CITY
ENGINEERING & PUBLIC WORKS DEPARTMENT

PDC ENGINEERS
PLAN • DESIGN • CONSTRUCT
A BESPEC COMPANY
9109 Mendenhall Mall Rd. Ste. 4, Juneau, AK 99801
907.780.6060 | AECC605

STATE OF ALASKA
49 TH
JOSEPH M. PUSICH
CE 8152
REGISTERED PROFESSIONAL ENGINEER
12/17/2021

BARTLETT REGIONAL HOSPITAL
WATER AND SEWER UPGRADES

CBJ CONTRACT No. BE22-185
CITY & BOROUGH OF JUNEAU, ALASKA

CONSTRUCTION DETAILS

DATE: Dec 17, 2021
PDC No. 21285JN

SHEET
C101

N:\Projects\0323.21285-CBJ_BRH_RRC\CAD\01cnst-21285JN.dwg PLOT: December 17, 2021 at: 10:43am

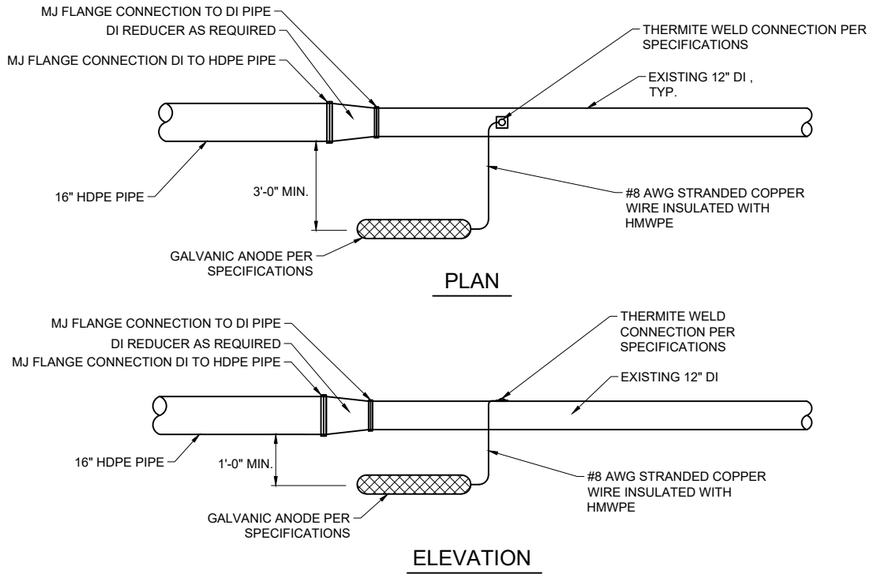

1 C102 **GALVANIC ANODE INSTALLATION FOR EXISTING METALLIC PIPE CONNECTIONS**

SCALE: NTS

ANODE SUMMARY TABLE
INSTALLED ON:
12" DI TEE TOWARDS WILDFLOWER COURT (2 ANODES)
12" DI TOWARDS CBJ WATER FILTRATION BUILDING (2 ANODES)
4" DI SERVICE TO BARTLETT HOUSE (1 ANODE)
FIRE HYDRANT SALMON CREEK ACCESS ROAD (1 ANODE)

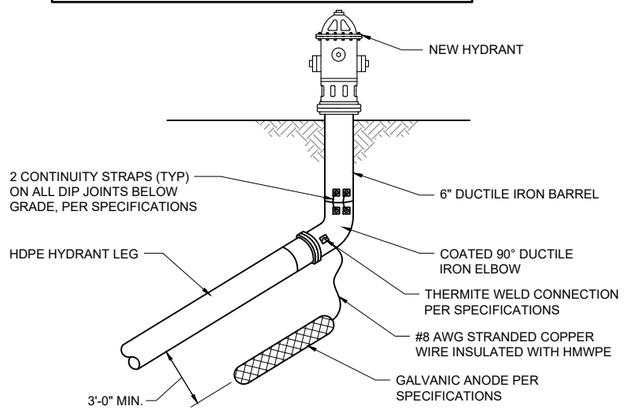

2 C102 **GALVANIC ANODE INSTALLATION AT FIRE HYDRANT ASSEMBLY**

SCALE: NTS

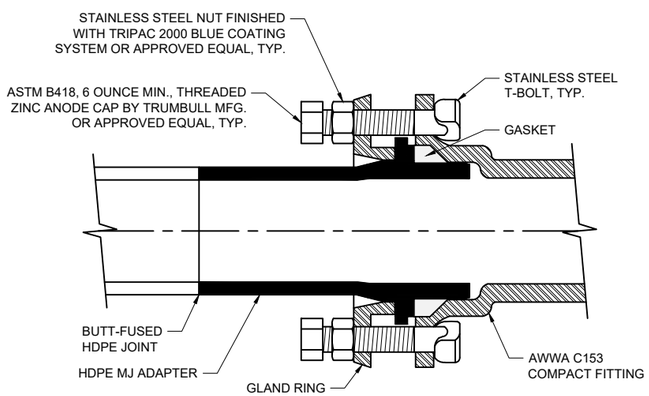

3 C102 **TYPICAL HDPE MJ CONNECTION TO DI FITTING**

SCALE: NTS

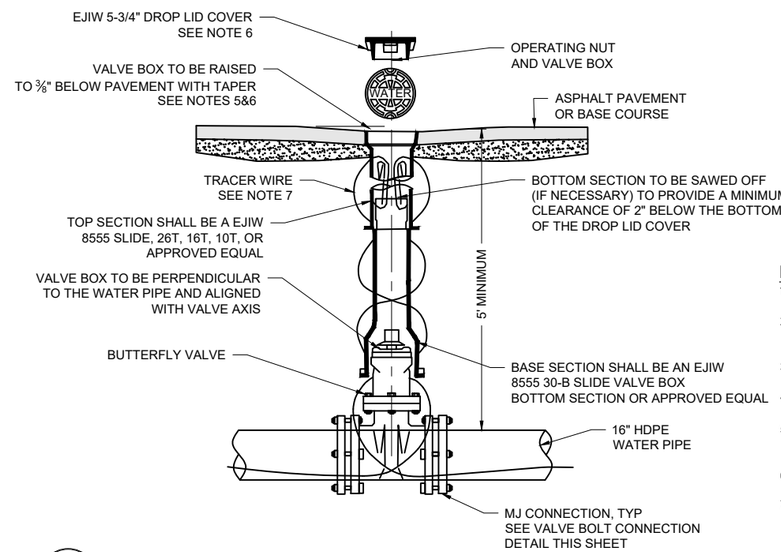

4 C102 **MAIN LINE WATER VALVE DETAIL**

SCALE: NTS

CORROSION PROTECTION SPECIFICATIONS AND NOTES:

ANODES

1. ANODES SHALL BE 18LB BARE WEIGHT ZINC WITH PREPACKAGED ANODE BACKFILL.
2. ACCEPTABLE ANODE MODELS ARE:
   a. MODEL NO. ZUR-18 FROM FARWEST INDUSTRIES
   b. MODEL S18 FROM MESA PRODUCTS
   c. APPROVED EQUAL
3. INSTALL TYPE, SIZE AND NUMBER OF ANODES SPECIFIED.
4. INSTALL 2 ANODES TO ALL CONNECTIONS TO EXISTING DUCTILE IRON PIPE 12-INCH DIAMETER AND LARGER.
5. CONDUCTOR WIRE SHALL BE A MINIMUM SIZE OF #8 AWG, INSULATED WITH HMWPE AND SHALL BE A MINIMUM OF 10-FEET LONG.
6. PREPACKAGED ANODE SHALL BE SATURATED WITH WATER PRIOR TO BACKFILL.
7. ANODES SHALL BE PLACED IN NATIVE EARTH BACKFILL. DO NOT PLACE IN PIPE BEDDING MATERIAL.

THERMITE (EXOTHERMIC) WELDING

1. THERMITE WELD MATERIALS SHALL BE DESIGNED FOR CONNECTION OF COPPER TO DUCTILE IRON AND CAST IRON SURFACES AND SHALL BE INSTALLED PER MANUFACTURERS INSTRUCTIONS.
2. ACCEPTABLE MANUFACTURERS OF THERMITE WELD PRODUCTS ARE:
   a. CADWELD BY ERICO PRODUCTS INC.
   b. THERMOWELD BY CONTINENTAL INDUSTRIES INC.
   c. APPROVED EQUAL
3. A 2-INCH MINUS SQUARE AREA IN THE PIPE SURFACE SHALL BE GROUND CLEAN PER MANUFACTURERS RECOMMENDATIONS PRIOR TO THERMITE WELDING.
4. WIRE ENDS SHALL HAVE PROPER ADAPTER SLEEVES TO ENSURE PROPER BOND. #8 AWG SHALL HAVE ADAPTER SLEEVES SPECIFIED BY THERMITE WELD MANUFACTURER. FIELD INSTALLED SLEEVES SHALL HAVE WIRE CONDUCTOR EXTEND 1/4-INCH BEYOND ENDS OF SLEEVE.
5. WIRE CONNECTION SHALL BE TESTED FOR INTEGRITY PRIOR TO COATING.
6. CONTINUITY STRAPS SHALL BE #2 AWG COPPER STRANDED WIRE WITH THW INSULATION AND SHALL BE ATTACHED TO THE PIPE BY THERMITE WELDING AND COATED AND SEALED AS DESCRIBED BELOW.

COATING AND SEALING

1. ALL THERMITE WELDS SHALL BE PROTECTED AND SEALED BY:
   a. PREFABRICATED THERMITE WELD CAPS, SIZED ACCORDING TO WIRE SIZE, MINIMUM DIMENSIONS OF 4-INCH BY 4-INCH FILLED WITH ELASTOMERIC MASTIC COATING OR,
   b. HEAT SHRINK SLEEVE PIPE ENCASEMENT AFTER COATING THERMITE WELD WITH ELASTOMERIC MASTIC COATING - HEAT SHRINK SLEEVE SHALL BE CANUSA AQUA OR APPROVED EQUAL.
2. ALL PIPE SURFACE COATING DAMAGED BEYOND THE WELD CAPS OR HEAT SHRINK SHALL BE COATED WITH PROTAL 7125 FROM DENSO NORTH AMERICA OR APPROVED EQUAL.

MAIN LINE VALVE NOTES:

1. A VALVE IS REQUIRED WHERE SHOWN ON THE PLANS.
2. GROUND COVER SHALL BE 5' MINIMUM. ADDITIONAL COVER (MORE THAN 5') WILL BE REQUIRED IN SOME LOCATIONS TO ROUTE NEW WATER PIPE BENEATH EXISTING OR PROPOSED UTILITIES.
3. THIS DETAIL APPLIES TO ALL MAINLINE VALVES AND ALL WATER VALVES 4" DIAMETER OR GREATER.
4. NO MORE THAN 1 VALVE BOX PAVING RISER IS ALLOWED PER VALVE.
5. VALVE BOXES ARE TO BE RAISED DURING PAVING OPERATIONS A MINIMUM OF ⅜" BELOW FINISH PAVEMENT, VALVE BOXES THAT DO NOT MEET GRADE SPECIFICATIONS SHALL BE SAWCUT, RAISED TO GRADE AND PATCHED.
6. VALVE BOX COVER SHALL BE 5 - ¾" DROP LID TYPE WITH 1" RAISED LETTERING (RECESSED FLUSH) AND 2 CLOSED PICKHOLES.
7. TRACER WIRE SHALL BE NO.10 AWG HIGH-STRENGTH COPPER CLAD STEEL WITH BLUE HDPE INSULATION JACKET. MAIN LINE TRACER WIRE SHALL NOT BE SPLICED AND SHALL BE CONTINUOUS BETWEEN VALVE BOXES. TRACER WIRE SHALL BE CONNECTED TO THE BOTTOM QUADRANT OF THE HDPE WATER PIPE. EACH END OF TRACER WIRE SHALL BE TERMINATED AT A VALVE BOX, TRACER WIRE SHALL RUN OUTSIDE THE VALVE BOX AND BE INSERTED INTO THE VALVE BOX THROUGH A ¾" DRILLED HOLE WITHIN 9" - 12" OF THE TOP. 5' OF ADDITIONAL TRACER WIRE SHALL BE NEATLY COILED WITHIN THE VALVE BOX.
8. ALL BOLTS TO HAVE THREADED ZINC ANODE CAP.

N:\Projects\f0323.21285-CBJ_BRH_RRC\CIC400\cnst-21285JN.dwg PLOT: December 17, 2021 at: 10:43am

DESIGN JMP
DRAWN JMK
CHECK JMP
APPROVED JMP
FILE:

No.	DATE	REVISION

CITY AND BOROUGH OF JUNEAU
ALASKA'S CAPITAL CITY
ENGINEERING & PUBLIC WORKS DEPARTMENT

PDC ENGINEERS
PLAN • DESIGN • CONSTRUCT
A BESPEC COMPANY
9109 Mendenhall Mall Rd. Ste. 4, Juneau, AK 99801
907.780.6060 | AECC605

STATE OF ALASKA 49TH
JOSEPH M. PUSICH
CE 8152
REGISTERED PROFESSIONAL ENGINEER
12/17/2021

BARTLETT REGIONAL HOSPITAL
WATER AND SEWER UPGRADES

CBJ CONTRACT No. BE22-185
CITY & BOROUGH OF JUNEAU, ALASKA

CONSTRUCTION DETAILS

DATE: Dec 17, 2021
PDC No. 21285JN

SHEET
C102

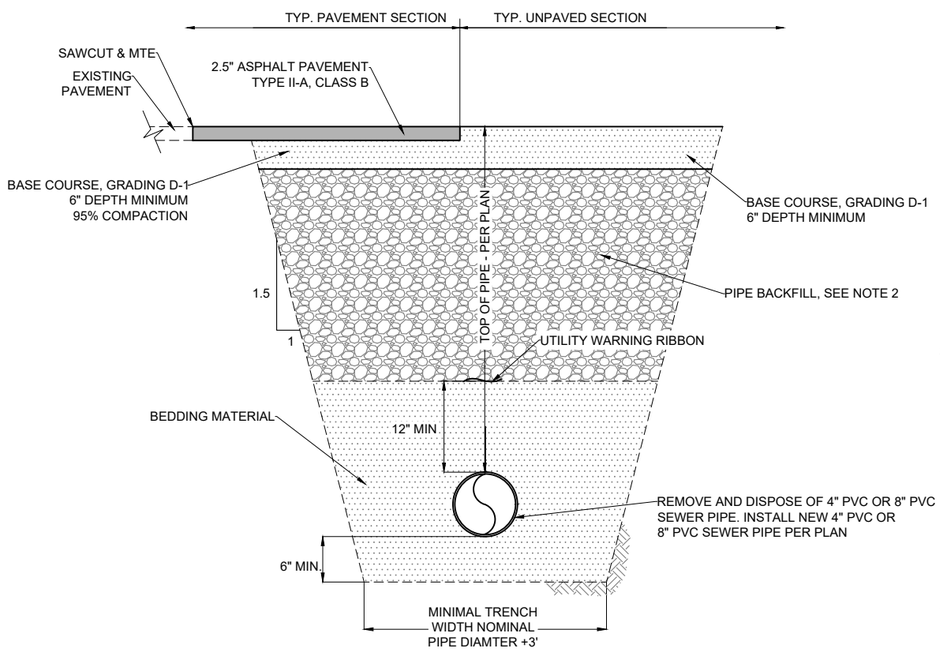

1 C103 **SEWER PIPE TRENCH DETAIL - HOSPITAL DRIVE**

SCALE: NTS

SEWER PIPE TRENCH NOTES:

1. BEDDING SHALL BE PLACED IN MAX. 6" LIFTS AND SHALL BE COMPACTED TO 95%.
2. PIPE BACKFILL SHALL BE EXISTING EXCAVATED TRENCH MATERIAL UNLESS OTHERWISE NOTED.
3. EXISTING PAVEMENT SHALL BE SAWCUT PRIOR TO PAVING AND SUBSEQUENT TO BACKFILLING THE TRENCH. SAWCUT TO A CLEAN, NEAT LINE THAT EXPOSES A MINIMUM OF 18" OF UNDISTURBED BASE MATERIAL. SAWCUT IN EXISTING PAVEMENT SHALL NOT BE MADE UNTIL 24 HOURS PRIOR TO FINAL PAVING.
4. ALL ASPHALT JOINTS SHALL BE SEALED WITH CSS-1 OR APPROVED EQUAL.

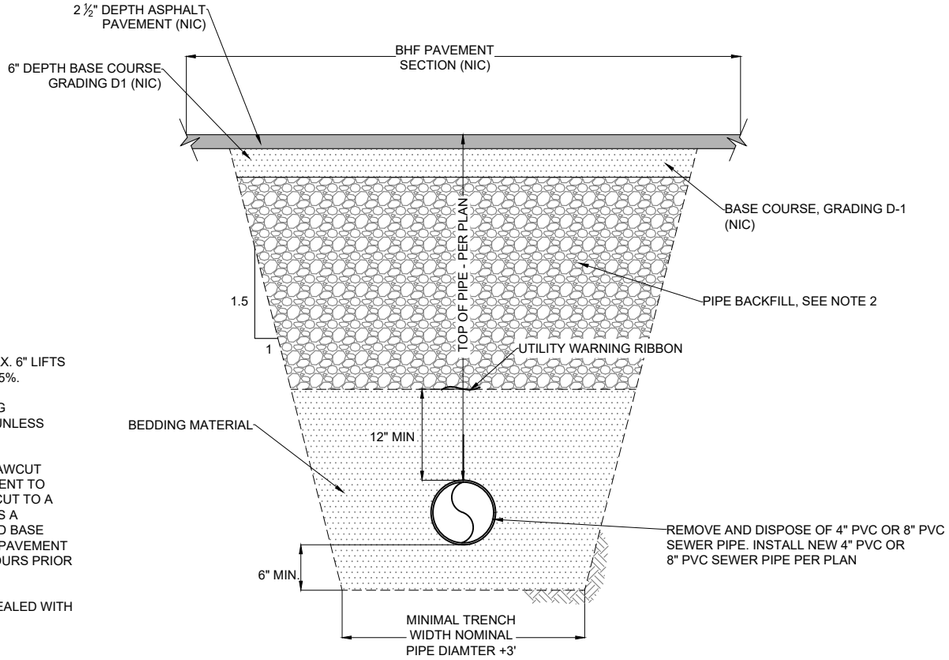

2 C103 **SEWER PIPE TRENCH DETAIL - ASPHALT W/IN BHF PROJECT LIMITS**

SCALE: NTS

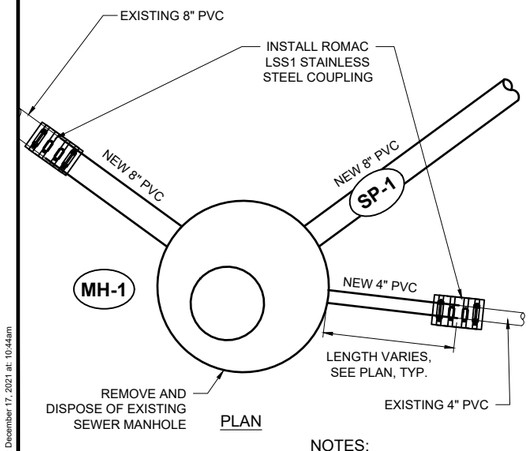

PLAN

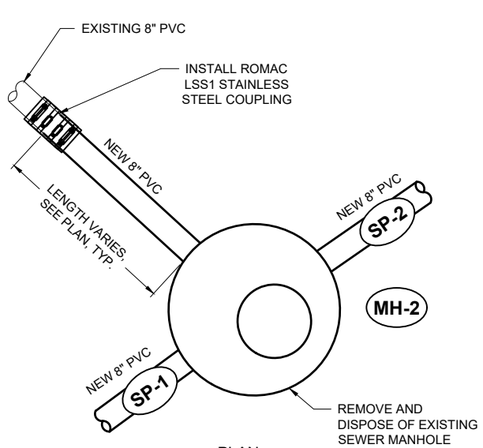

PLAN

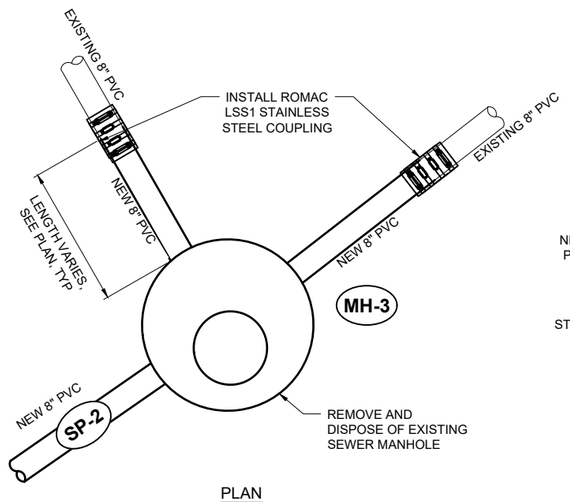

PLAN

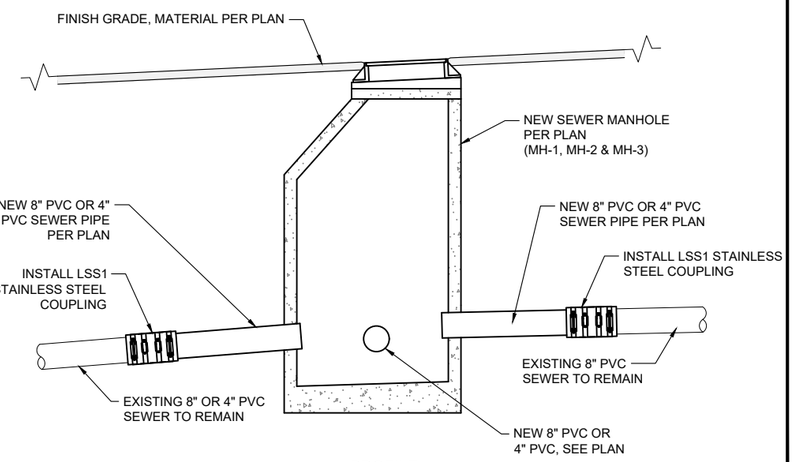

PROFILE

NOTES:

1. SANITARY SEWER MANHOLE SHALL CONFORM TO CBJ STANDARD DETAIL 203.
2. LSS1 CLAMP SHALL CONFORM TO CBJ STANDARD DETAIL 218.
3. CONE AND LADDER TO BE LOCATED OVER THE LARGEST BENCH.

3 C103 **NEW SEWER PIPE TO EXISTING SEWER PIPE CONNECTION DETAIL AT MANHOLES**

SCALE: NTS

N:\Projects\0323.21285-CBJ_BRH_RRC\CVC\4001mst-c21285JN.dwg PLOT: December 17, 2021 at: 10:44am

DESIGN JMP
DRAWN JMK
CHECK JMP
APPROVED JMP
FILE:

No.	DATE	REVISION

CITY AND BOROUGH OF JUNEAU
ALASKA'S CAPITAL CITY
ENGINEERING & PUBLIC WORKS DEPARTMENT

PDC ENGINEERS
PLAN • DESIGN • CONSTRUCT
A BESPEG COMPANY
9109 Mendenhall Mall Rd. Ste. 4, Juneau, AK 99801
907.780.6060 | AECC605

STATE OF ALASKA
49 TH
JOSEPH M. PUSICH
CE 8152
REGISTERED PROFESSIONAL ENGINEER
12/17/2021

BARTLETT REGIONAL HOSPITAL
WATER AND SEWER UPGRADES

CBJ CONTRACT No. BE22-185
CITY & BOROUGH OF JUNEAU, ALASKA

CONSTRUCTION DETAILS

DATE: Dec 17, 2021
PDC No. 21285JN

SHEET
C103

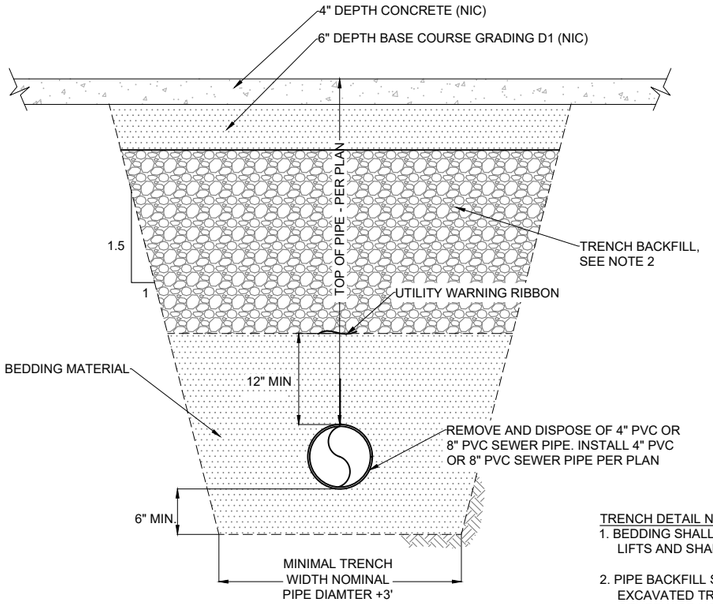

TRENCH DETAIL NOTES:
1. BEDDING SHALL BE PLACED IN MAX. 6" LIFTS AND SHALL BE COMPACTED TO 95%.
2. PIPE BACKFILL SHALL BE EXISTING EXCAVATED TRENCH MATERIAL UNLESS OTHERWISE NOTED.

1 / C104 SEWER PIPE TRENCH DETAIL - CONCRETE W/IN BHF PROJECT LIMITS
SCALE: NTS

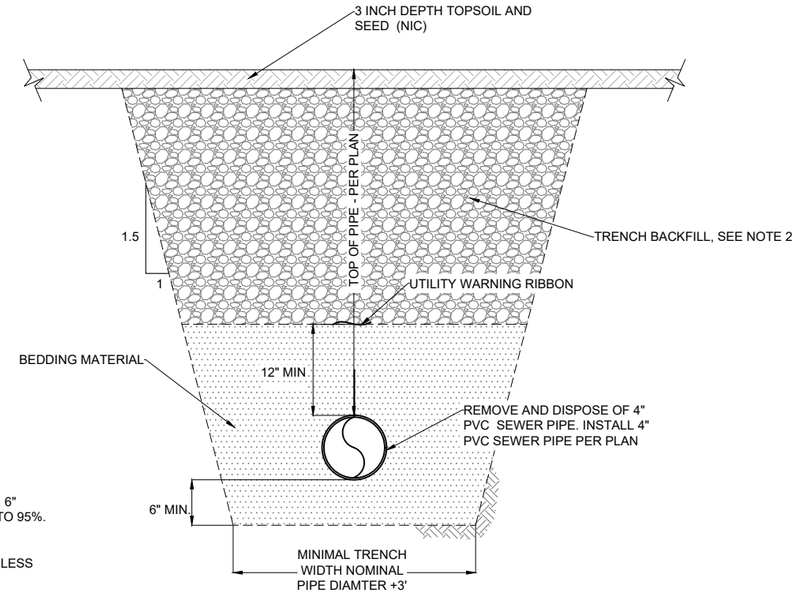

2 / C104 SEWER PIPE TRENCH DETAIL - TOPSOIL W/IN BHF PROJECT LIMITS
SCALE: NTS

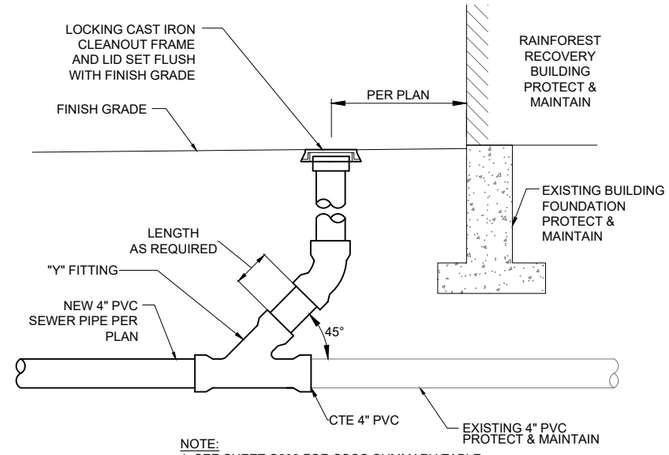

NOTE:
1. SEE SHEET C200 FOR SSCO SUMMARY TABLE.

3 / C104 SANITARY SEWER CLEANOUT DETAIL
SCALE: NTS

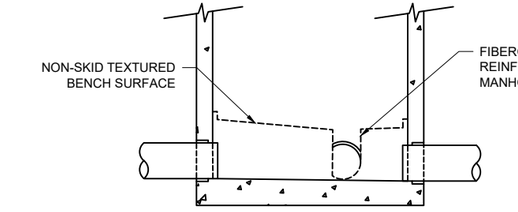

SECTION A-A

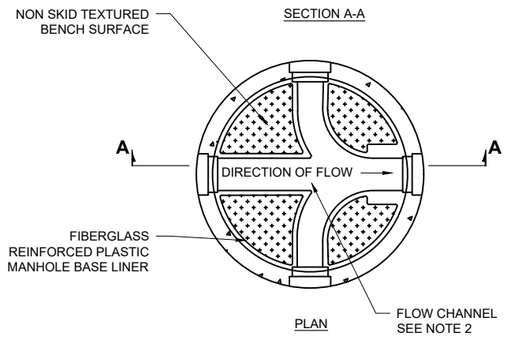

PLAN

NOTES:
1. THE MANHOLE BASE LINER SHALL BE FIBERGLASS REINFORCED PLASTIC (FRP) OR APPROVED EQUAL.
2. FRP BASE LINER SHALL HAVE A MINIMUM DROP OF 0.1' BETWEEN INLET AND OUTLET PIPES.
3. FRP BASE LINER SHALL BE PRE MANUFACTURED TO MATCH THE PIPE SIZES, ANGLES, SLOPES AND INVERTS AS SHOWN IN THE DESIGN DRAWINGS.
4. FIBERGLASS REINFORCED PLASTIC BASE LINERS SHALL USE FLEXIBLE SEAL ADAPTER FOR ALL PIPES.
5. NOTES AND REQUIREMENTS IN CBJ DETAIL 203 FOR STANDARD SANITARY SEWER MANHOLE TYPE I & II APPLY TO THIS DETAIL.

4 / C104 PRECAST MANHOLE WITH FIBERGLASS REINFORCED PLASTIC BASE LINER DETAIL
SCALE: NTS

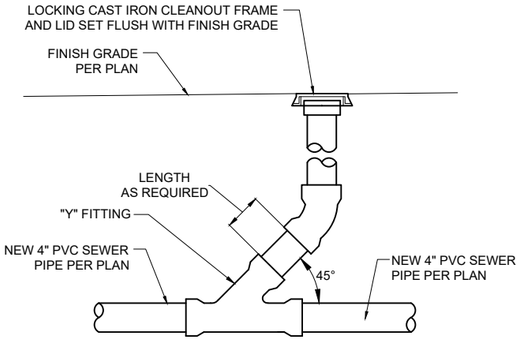

NOTE:
1. SEE SHEET C200 FOR SSCO SUMMARY TABLE.

5 / C104 SANITARY SEWER MAINLINE CLEANOUT DETAIL
SCALE: NTS

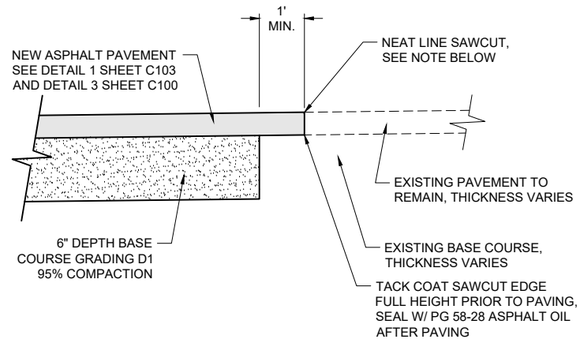

NOTE:
FINAL SAWCUT OF EXISTING PAVEMENT SHALL NOT BE MADE UNTIL 24 HOURS PRIOR TO FINAL PAVING.

6 / C104 HOSPITAL DRIVE PAVEMENT MATCH JOINT DETAIL
SCALE: NTS

N:\Projects\f0323.21285-CBJ_BRH_RRC\C\C400\cost\21285JN.dwg PLOT: December 17, 2021 at: 10:44am

DESIGN JMP
DRAWN JMK
CHECK JMP
APPROVED JMP
FILE:

No.	DATE	REVISION

CITY AND BOROUGH OF JUNEAU
ALASKA'S CAPITAL CITY
ENGINEERING & PUBLIC WORKS DEPARTMENT

PDC ENGINEERS
PLAN • DESIGN • CONSTRUCT
A BESPEG COMPANY
9109 Mendenhall Mall Rd. Ste. 4, Juneau, AK 99801
907.780.6060 | AECC605

STATE OF ALASKA 49 TH
JOSEPH M. PUSICH
CE 8152
REGISTERED PROFESSIONAL ENGINEER
12/17/2021

BARTLETT REGIONAL HOSPITAL
WATER AND SEWER UPGRADES

CBJ CONTRACT No. BE22-185
CITY & BOROUGH OF JUNEAU, ALASKA

CONSTRUCTION DETAILS

DATE: Dec 17, 2021
PDC No. 21285JN

SHEET
C104

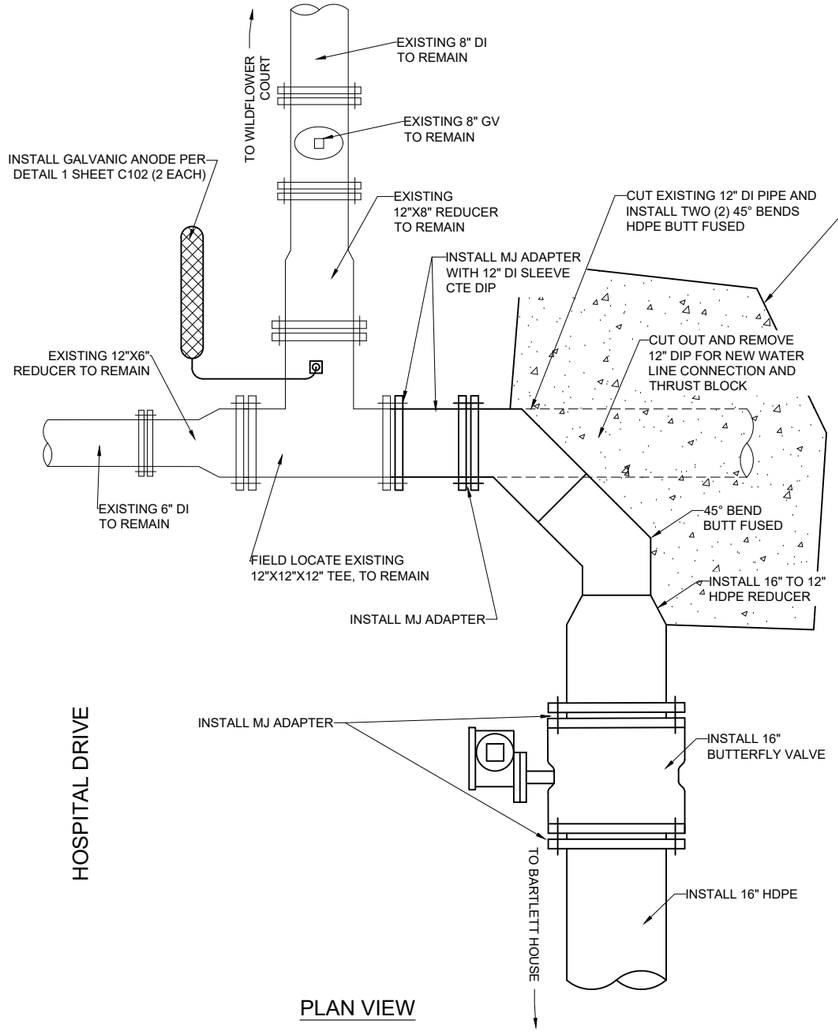

PLAN VIEW

1 C105 — 16" HDPE CONNECTION DETAIL AT HOSPITAL DRIVE

SCALE: NTS



EXISTING 12" GATE VALVE TO BE SALVAGED AND RELOCATED.
2" HDPE SERVICE TO AEL&P TO BE REMOVED AND RECONNECTED

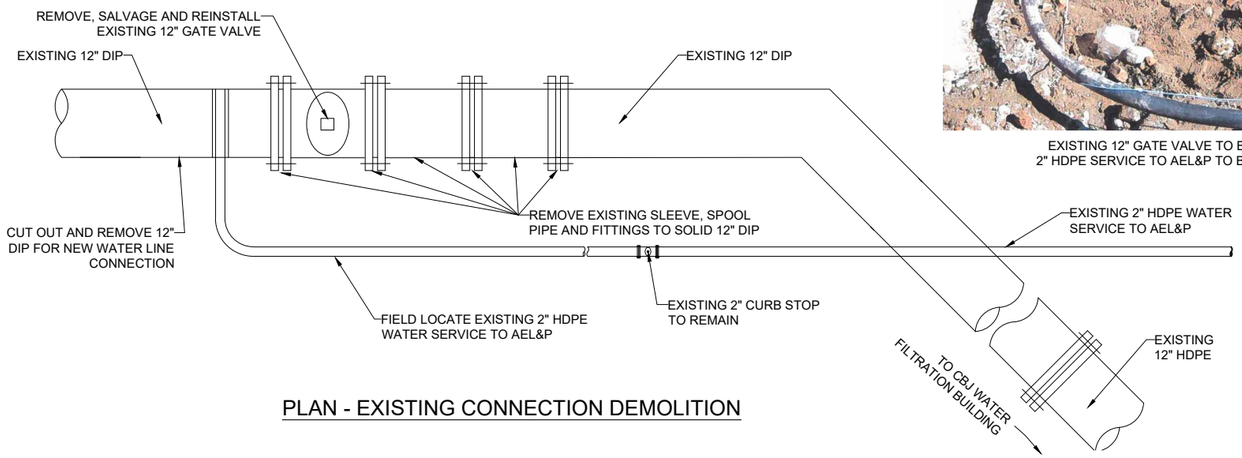

PLAN - EXISTING CONNECTION DEMOLITION

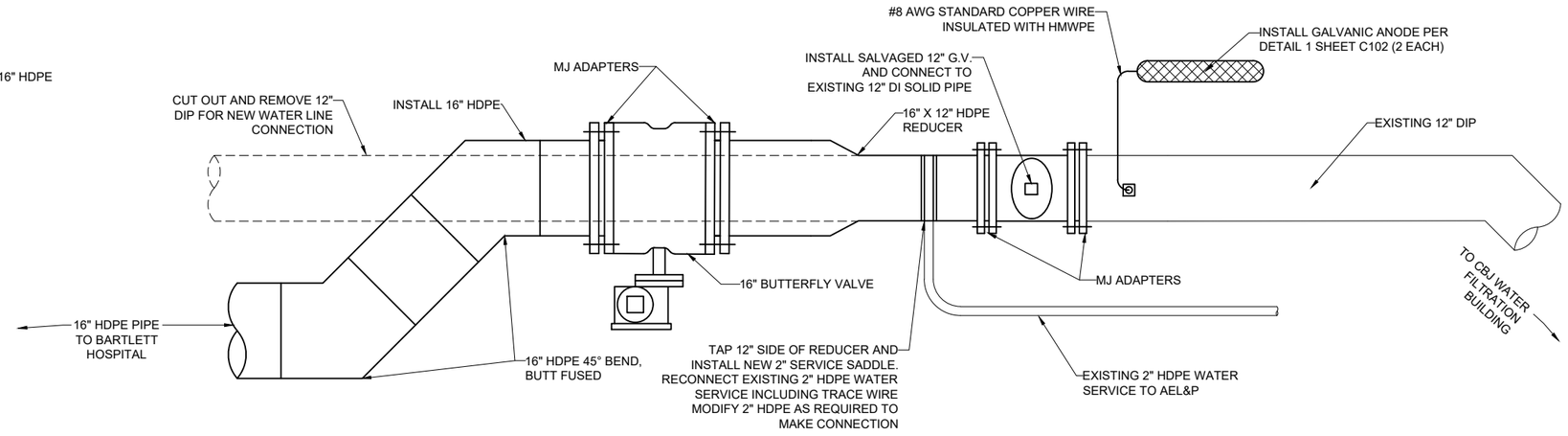

PLAN -PROPOSED CONNECTION

2 C105 — 16" HDPE CONNECTION DETAIL AT SALMON CREEK ACCESS ROAD

SCALE: NTS

WATER LINE CONNECTION NOTES:

1. ALL DI CONNECTIONS SHALL BE MEGALUGGED OR CONNECTED WITH LOCKING FIELD GASKETS. ALL HDPE CONNECTIONS SHALL BE BUTT FUSED, ELECTROFUSION COUPLERS ARE DISCOURAGED AND SHALL ONLY BE ALLOWED WITH PRIOR, WRITTEN APPROVAL OF THE ENGINEER.
2. SEE SHEETS C200 AND C203 FOR WATER LINE SHUTDOWN NOTIFICATIONS AND REQUIREMENTS.
3. SEE SHEET C102 FOR GALVANIZED ANODE INFORMATION.
4. TRACER WIRE AND VALVE BOXES NOT SHOWN FOR CLARITY.

DESIGN	JMP
DRAWN	JMK
CHECK	JMP
APPROVED	JMP
FILE:	

No.	DATE	REVISION

CITY AND BOROUGH OF JUNEAU — ALASKA'S CAPITAL CITY
ENGINEERING & PUBLIC WORKS DEPARTMENT

PDC ENGINEERS
PLAN • DESIGN • CONSTRUCT
A BESPEC COMPANY
9109 Mendenhall Mall Rd. Ste. 4, Juneau, AK 99801
907.780.6060 | AECC605

STATE OF ALASKA — 49TH — JOSEPH M. PUSICH — CE 8152 — REGISTERED PROFESSIONAL ENGINEER
12/17/2021

BARTLETT REGIONAL HOSPITAL
WATER AND SEWER UPGRADES

CBJ CONTRACT No. BE22-185
CITY & BOROUGH OF JUNEAU, ALASKA

WATER LINE CONNECTION DETAILS

DATE: Dec 17, 2021
PDC No. 21285JN

SHEET
C105

N:\Projects\0323.21285-CBJ_BRH_RRC\CAD\sht\21285JN.dwg PLOT: December 17, 2021 at: 10:45am

SHEET NOTES

1. PROVIDE ALL ADAPTERS, ELBOWS, AND OTHER FITTINGS NECESSARY TO CONNECT TO DISSIMILAR PIPE SIZES, MATERIALS AND DEPTHS.
2. PROTECT AND MAINTAIN ALL EXISTING UNDERGROUND UTILITIES WITHIN WORK LIMITS OF NEW 16" HDPE WATERLINE AND NEW SANITARY SEWER SYSTEM.
3. CONTRACTOR TO PROTECT AND MAINTAIN EXISTING 12" DUCTILE IRON WATER MAIN UNTIL CONNECTION FROM NEW 16" HDPE TO EXISTING 12" DI WATER MAIN TAKES PLACE.
4. CONNECT PROPOSED 16" HDPE TO EXISTING 12" DI WATER LINE. SEE DETAIL 1 SHEET C105.
5. REMOVE AND REPLACE 5' OF EXISTING 8" PVC SEWER PIPE AT MANHOLE CONNECTION FOR NEW MANHOLE INSTALLATION. SEE DETAIL 3, SHEET C103.
6. THE BHF (CBJ BE21-149) IS CURRENTLY UNDER CONSTRUCTION AND IS SCHEDULED FOR SUBSTANTIAL COMPLETION ON SEPTEMBER 17, 2022. THE SEWER UPGRADES FOR THIS PROJECT ARE TO BE COMPLETED PRIOR TO PLACEMENT OF ASPHALT AND CONCRETE FOR THE BHF PROJECT.
7. BEFORE REPLACEMENT OF SEWER MAIN AND SEWER SERVICE TO RAINFOREST RECOVERY BUILDING, CONDUCT AN INVESTIGATIVE DIG TO DETERMINE ELEVATIONS OF THE SEWER SERVICE EXITING THE RAINFOREST RECOVERY CENTER DETOX ADDITION. REPORT ELEVATIONS TO THE ENGINEER.
8. REMOVE & DISPOSE OF EXISTING 4" PVC OR 8" PVC.
9. CONTRACTOR TO PROVIDE TEMPORARY SEWER DURING INSTALLATION OF NEW MANHOLES, SEWER PIPES AND SEWER CLEANOUTS, AS REQUIRED TO MAINTAIN WASTEWATER FLOWS.

MH-3 TYPE-I DROP MANHOLE*	
N: 9949.67	E: 9873.47
LID EL=	97.96
SP-2 IE=	93.16
EXIST 8" PVC (IN) (NE) IE=	94.78
EXIST 8" PVC (IN) (N) IE=	93.50

*W/ FIBERGLASS BASE LINER KOR-N-SEAL CONNECTORS, SEE NOTE 9
REMOVE AND DISPOSE OF EXISTING SEWER MANHOLE

SANITARY SEWER CLEANOUT SUMMARY			
CLEANOUT	NORTHING	EASTING	LID EL*
SSCO-1	9940.2	9889.4	98.6 +/-
SSCO-2	9888.8	9975.2	99.4 +/-
SSCO-3	9858.0	10011.3	99.2 +/-
SSCO-4	9874.0	10032.2	100.7 +/-

*LID ELEVATIONS TO BE FIELD ADJUSTED TO GRADE. COORDINATE WITH BEHAVIORAL HEALTH FACILITY. SEE NOTE 7 & 9. REMOVE AND DISPOSE OF EXISTING SEWER CLEANOUTS.

SANITARY SEWER PIPE SUMMARY				
PIPE	DIA.	LENGTH	TYPE	SLOPE
SP-2	8"	80.5'	PVC	0.5%
SP-3	4"	22.5'	PVC	1.5%
SP-4	4"	100.0'	PVC	1.5%
SP-5	4"	47.5'	PVC	1.0%
SP-6	4"	26.6'	PVC	1.0%

NOTE: PIPE LENGTHS AND SLOPES ARE MEASURED AND CALCULATED FROM CENTER TO CENTER OF STRUCTURES, UON. SEE NOTE 9.
REMOVE AND DISPOSE OF EXISTING 4" AND 8" PVC SEWER PIPE.

SD-1 EXISTING CB	
N: 9983.82	E: 9911.01
GRATE EL=	97.95
(E) 12" CMP IN IE =	96.14
(E) 12" CMP OUT IE =	96.05

SD-2 EXISTING SDMH	
N: 9927.70	E: 9897.33
GRATE EL=	97.50
(E) 18" CMP IN (N) IE=	93.98
(E) 12" CMP IN (W) IE=	93.77
(E) 18" CPP OUT IE=	93.68

SD-3 EXISTING CB	
N: 9934.95	E: 9804.48
GRATE EL=	100.24
(E) 8" PVC IN IE=	95.64
(E) 8" IRON OUT IE=	95.62

SD-4 EXISTING SDMH	
N: 9881.48	E: 9856.90
GRATE EL=	97.65
(E) 8" PVC IN IE=	92.76
(E) 6" PVC IN IE=	92.99
(E) 18" CPP IN (N) IE=	91.22
(E) 18" CPP OUT IE=	91.12

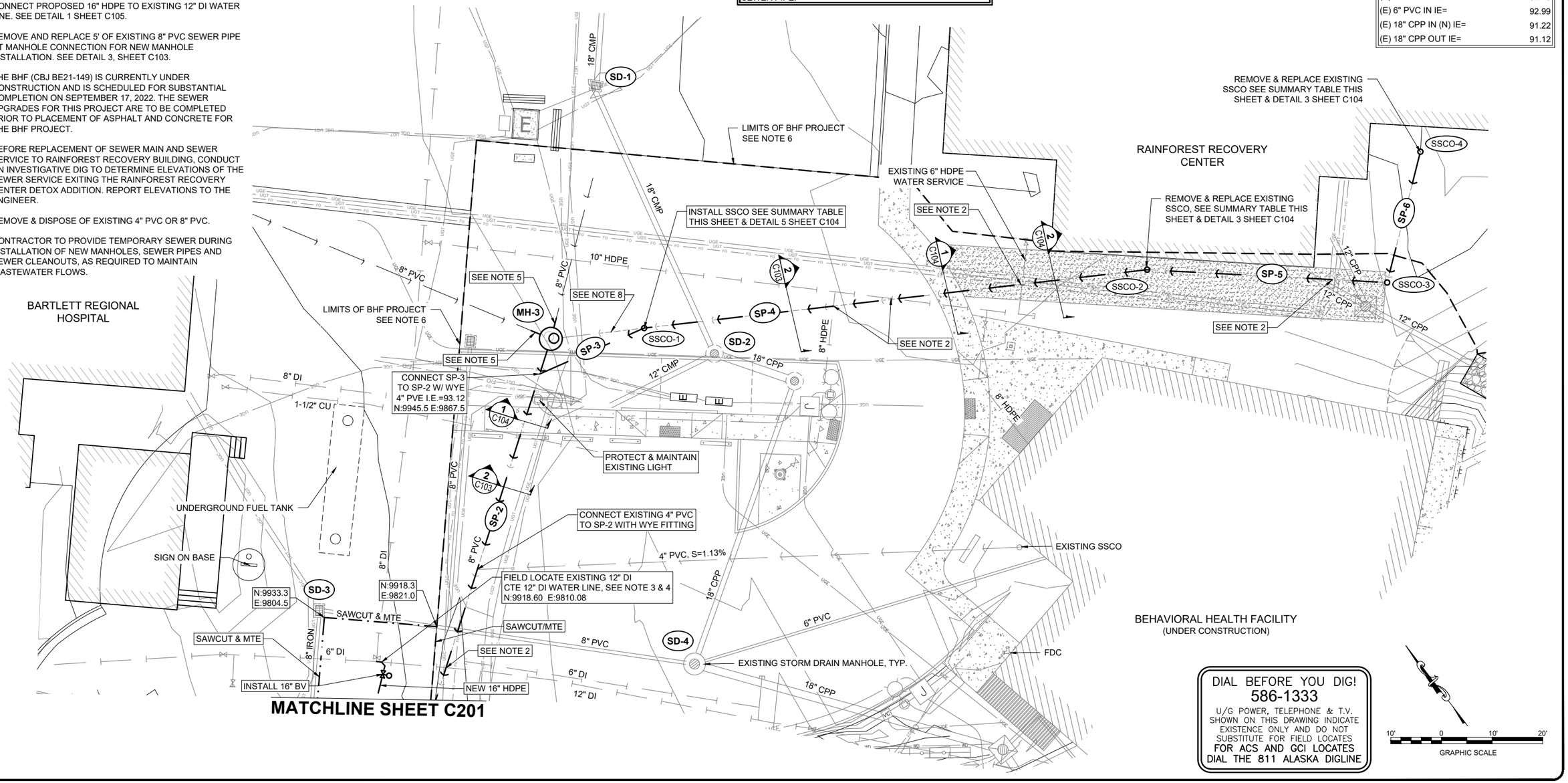

DIAL BEFORE YOU DIG!
586-1333
U/G POWER, TELEPHONE & T.V. SHOWN ON THIS DRAWING INDICATE EXISTENCE ONLY AND DO NOT SUBSTITUTE FOR FIELD LOCATES
FOR ACS AND GCI LOCATES DIAL THE 811 ALASKA DIGLINE

10' 0 10' 20'
GRAPHIC SCALE

DESIGN JMP
DRAWN JMK
CHECK JMP
APPROVED JMP
FILE:

No.	DATE	REVISION

CITY AND BOROUGH OF JUNEAU
ALASKA'S CAPITAL CITY
ENGINEERING & PUBLIC WORKS DEPARTMENT

PDC ENGINEERS
PLAN • DESIGN • CONSTRUCT
A BESPEG COMPANY
9109 Mendenhall Mall Rd. Ste. 4, Juneau, AK 99801
907.780.6060 | AECC605

STATE OF ALASKA 49TH
JOSEPH M. PUSICH
CE 8152
REGISTERED PROFESSIONAL ENGINEER
12/17/2021

BARTLETT REGIONAL HOSPITAL
WATER AND SEWER UPGRADES

CBJ CONTRACT No. BE22-185
CITY & BOROUGH OF JUNEAU, ALASKA

UTILITY PLAN VIEW

DATE: Dec 17, 2021
PDC No. 21285JN

SHEET
C200

N:\Projects\03\23.21285-CBJ_BRH_RRC\CAD\01mst-21285JN.dwg PLOT: December 17, 2021 at: 10:45am

MH-2 TYPE-I MH	
N: 9903.71	E: 9807.36
LID EL=	99.89
SP-1 IE=	92.75
SP-2 IE=	92.79
EXIST 8" PVC (IN) IE=	93.60
*W/ FIBERGLASS BASE LINER & KOR-N-SEAL CONNECTORS, SEE NOTE 9	

DIAL BEFORE YOU DIG!
586-1333
U/G POWER, TELEPHONE & T.V. SHOWN ON THIS DRAWING INDICATE EXISTENCE ONLY AND DO NOT SUBSTITUTE FOR FIELD LOCATES
FOR ACS AND GCI LOCATES
DIAL THE 811 ALASKA DIGLINE

MATCHLINE SHEET C200

8" PVC
ROUTE NEW 16" HDPE BELOW EXISTING 8" PVC SEWER LINE
PROTECT AND MAINTAIN
16" HDPE
16" X 16" X16" TEE FITTING
N:9891.80 E:9774.22
PROTECT AND MAINTAIN EXISTING VALLEY GUTTER
INSTALL 16" MJ PLUG AT END OF 16" BUTTERFLY VALVE
N:9889.44 E:9771.04
EMERGENCY DROP OFF
SEE NOTE 10
N:9890.4
E:9762.6
N:9883.0
E:9769.0
12" DI
COVERED AREA
SAWCUT/MTE
NEW 16" HDPE
8" PVC
MH-2
SP-2
SEE NOTE 5
LIMITS OF BHF PROJECT SEE NOTE 7
4" DI
SAWCUT/MTE
BHF DRIVEWAY (ASPHALT SURFACE)
NEW 16" HDPE
SEE NOTE 2
SEE NOTE 8
INSTALL TWO (2) 16" BV
BARTLETT HOUSE PARKING (ASPHALT SURFACE)
SAWCUT & MTE
NEW PAVEMENT TO BE FLUSH W/ CONCRETE PATH
PROTECT AND MAINTAIN CONCRETE PATH
SAWCUT & MTE
N:9847.72
E:9734.79
EL=102.00
SP-1
N:9841.5
E:9712.4
SEE NOTE 4
HOSPITAL DRIVE (ASPHALT SURFACE)
8" PVC
BARTLETT HOUSE
BARTLETT MAINTENANCE EQUIPMENT STAGING AREA (GRAVEL SURFACE)
EDGE OF PAVEMENT
SEE NOTE 6
EXISTING GRAVEL/SAND COVERED STORAGE AREA ON CONCRETE JERSEY BARRIERS TO BE REMOVED AND RESET
8" PVC
MH-1
4" PVC
PROPERTY LINE, TYP
BEGIN SLURRY FILL OF 12" DI, SEE NOTE 3
N:9819.6, E:9899.7
18" CPP
16" CPP
BEHAVIORAL HEALTH FACILITY (UNDER CONSTRUCTION)
SEE NOTE 3
SEE NOTE 2
EXISTING SDMH
12" DI
15" CPP
NEW 16" HDPE
45° BEND
N:9807.79
E:9883.72
4" CPP FLEX PIPE
APPROXIMATE FILL LIMIT OF SHOT ROCK BORROW
APPROXIMATE LIMITS OF BHF PROJECT, SEE NOTE 7
MATCHLINE SHEET C202

MH-1 TYPE-I, DROP MANHOLE*	
N: 9806.34	E: 9674.66
LID EL=	103.75
SP-1 IE=	92.04
EXIST 8" PVC (OUT) IE=	91.80
EXIST 4" PVC (IN) IE=	96.20
*W/ FIBERGLASS BASE LINER, SEE NOTE 9 REMOVE AND DISPOSE OF EXISTING SEWER MANHOLE.	

SANITARY SEWER PIPE SUMMARY				
PIPE	DIA.	LENGTH	TYPE	SLOPE
SP-1	8"	164.6'	PVC	0.4%
SP-2	8"	80.5'	PVC	0.5%
NOTE: PIPE LENGTHS AND SLOPES ARE MEASURED AND CALCULATED FROM CENTER TO CENTER OF STRUCTURES, UON. REMOVE AND DISPOSE OF EXISTING 8" PVC SEWER PIPE.				

10' 0 10' 20'
GRAPHIC SCALE
CONTOUR INTERVAL=1'

SHEET NOTES

1. PROVIDE ALL ADAPTERS, ELBOWS, AND OTHER FITTINGS NECESSARY TO CONNECT TO DISSIMILAR PIPE SIZES, MATERIALS AND DEPTHS.
2. PROTECT AND MAINTAIN ALL EXISTING UNDERGROUND UTILITIES WITHIN WORK LIMITS OF NEW 16" HDPE WATERLINE.
3. CONTRACTOR TO PROTECT AND MAINTAIN EXISTING 12" DUCTILE IRON WATER MAIN UNTIL CONNECTION FROM NEW 16" HDPE TO EXISTING 12" DI WATER MAIN TAKES PLACE. AFTER 16" HDPE WATER LINE ACCEPTED THE 12" DI WATER SHALL BE FILLED WITH SLURRY.
4. PROTECT AND MAINTAIN ALL EXISTING UNDERGROUND UTILITIES WITHIN WORK LIMITS OF NEW SANITARY SEWER SYSTEM.
5. REMOVE AND REPLACE 5' OF EXISTING 8" PVC SEWER PIPE AT MANHOLE CONNECTION FOR NEW MANHOLE INSTALLATION. SEE DETAIL3, SHEET C103.
6. REMOVE AND REPLACE 10' OF EXISTING 8" AND 4" PVC SEWER PIPE AT MANHOLE CONNECTION FOR NEW MANHOLE INSTALLATION. SEE DETAIL 3, SHEET C103.
7. THE BHF (CBJ BE21-149) IS CURRENTLY UNDER CONSTRUCTION AND IS SCHEDULED FOR SUBSTANTIAL COMPLETION SEPTEMBER 17, 2022. THE SEWER UPGRADES FOR THIS PROJECT ARE TO BE COMPLETED PRIOR TO PLACEMENT OF ASPHALT AND CONCRETE FOR THE BHF PROJECT. SEE SHEET C004 AND C203 FOR WATER RELATED INSTALLATION COMPLETION DATES AND COORDINATION REQUIREMENTS.
8. FIELD LOCATE EXISTING 4" DI WATER SERVICE TO BARTLETT HOUSE. INSTALL 16" X 6" X 16" HDPE TEE WITH 6" G.V., CTE 4" DI WITH REDUCER AND GALVONIC ANODE. PROVIDE TEMPORARY WATER SERVICE TO BARTLETT HOUSE.
9. CONTRACTOR TO PROVIDE TEMPORARY SEWER DURING INSTALLATION OF MANHOLES AND NEW SEWER PIPES AS REQUIRED TO MAINTAIN WASTEWATER FLOWS.
10. BARTLETT HOSPITAL EMERGENCY DROP-OFF LANES SHALL NOT BE BLOCKED AT ANY TIME AND SHALL REMAIN OPEN AT ALL TIMES.

DESIGN JMP
DRAWN JMK
CHECK JMP
APPROVED JMP
FILE:

No.	DATE	REVISION

CITY AND BOROUGH OF JUNEAU
ALASKA'S CAPITAL CITY
ENGINEERING & PUBLIC WORKS DEPARTMENT

PDC ENGINEERS
PLAN • DESIGN • CONSTRUCT
A BESPES COMPANY
9109 Mendenhall Mall Rd. Ste. 4, Juneau, AK 99801
907.780.6060 | AECC605

STATE OF ALASKA
49 TH
JOSEPH M. PUSICH
CE 8152
REGISTERED PROFESSIONAL ENGINEER
12/17/2021

BARTLETT REGIONAL HOSPITAL
WATER AND SEWER UPGRADES

CBJ CONTRACT No. BE22-185
CITY & BOROUGH OF JUNEAU, ALASKA

UTILITY PLAN VIEW

DATE: Dec 17, 2021
PDC No. 21285JN
SHEET
C201

N:\Projects\W323.21285-CBJ_BRH_RRC\CIC200\cnsl-21285JN.dwg PLOT: December 17, 2021 at: 10:45am

SHEET NOTES

1. PROVIDE ALL ADAPTERS, ELBOWS, AND OTHER FITTINGS NECESSARY TO CONNECT TO DISSIMILAR PIPE SIZES, MATERIALS AND DEPTHS.
2. REMOVE AND RESET 16 L.F. OF EXISTING 6" CHAIN LINK FENCE FOR TEMPORARY PEDESTRIAN PATH. RESET FENCE AFTER ASPHALT PATH HAS BEEN REPAVED AND TEMPORARY PATH IS NO LONGER NEEDED.
3. CONSTRUCT TEMPORARY 8' WIDE PEDESTRIAN PATH OUTSIDE OF WORK ZONE. PATH SURFACE TO BE 6" DEPTH BASE COURSE GRADING D-1. CONTRACTOR TO SUBMIT TRAFFIC CONTROL PLAN TO DOT SHOWING PATH CLOSED AND DETOUR SIGNAGE TO SAFELY ALLOW PEDESTRIAN ACCESS THROUGH THE WORK ZONE. AREA TO RECEIVE 6" TOPSOIL AND SEED FOLLOWING COMPLETION OF BIKE PATH REPAVING.
4. CONTRACTOR TO PROTECT AND MAINTAIN EXISTING 12" DUCTILE IRON WATER MAIN UNTIL CONNECTION FROM NEW 16" HDPE TO EXISTING 12" DI WATER MAIN TAKES PLACE. AFTER 16" HDPE WATER LINE ACCEPTED THE 12" DI WATER SHALL BE FILLED WITH SLURRY.
5. REMOVE AND REPLACE EXISTING ASPHALT PAVEMENT FOR NEW 16" HDPE WATER MAIN INSTALLATION. SEE DETAIL 1 SHEET C100 FOR TYPICAL SECTION.
6. PROTECT AND MAINTAIN ALL EXISTING UNDERGROUND UTILITIES WITHIN WORK LIMITS OF NEW 16" HDPE WATERLINE.
7. CONTRACTOR TO FIELD LOCATE EXISTING 24" DI WATER LINE PRIOR TO INSTALLING NEW 16" HDPE WATER LINE TO DETERMINE ACTUAL DEPTH AND LOCATION. PROJECT DESIGN REQUIRES NEW 16" HDPE TO BE INSTALLED UNDER THE EXISTING 24" DI WATER LINE.
8. DISTURBED AREAS TO RECEIVE 3" DEPTH TOPSOIL AND SEED.

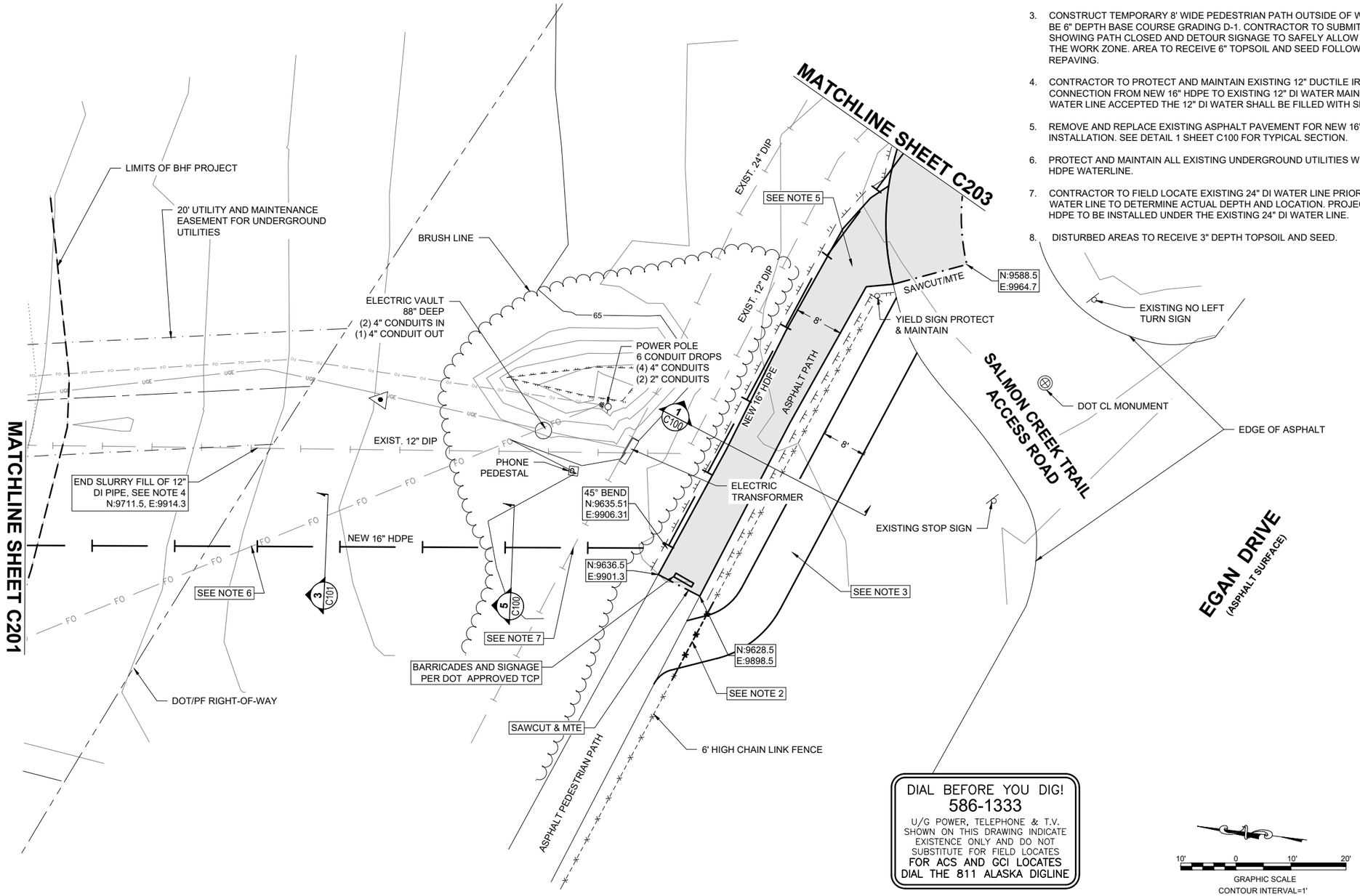

DIAL BEFORE YOU DIG!
586-1333
U/G POWER, TELEPHONE & T.V. SHOWN ON THIS DRAWING INDICATE EXISTENCE ONLY AND DO NOT SUBSTITUTE FOR FIELD LOCATES
FOR ACS AND GCI LOCATES DIAL THE 811 ALASKA DIGLINE

10' 0 10' 20'
GRAPHIC SCALE
CONTOUR INTERVAL=1'

DESIGN JMP
DRAWN JMK
CHECK JMP
APPROVED JMP
FILE:

No.	DATE	REVISION

CITY AND BOROUGH OF JUNEAU
ALASKA'S CAPITAL CITY
ENGINEERING & PUBLIC WORKS DEPARTMENT

PDC ENGINEERS
PLAN • DESIGN • CONSTRUCT
A BESPES COMPANY
9109 Mendenhall Mall Rd. Ste. 4, Juneau, AK 99801
907.780.6060 | AECC605

STATE OF ALASKA 49TH
JOSEPH M. PUSICH
CE 8152
REGISTERED PROFESSIONAL ENGINEER
12/17/2021

BARTLETT REGIONAL HOSPITAL
WATER AND SEWER UPGRADES

CBJ CONTRACT No. BE22-185
CITY & BOROUGH OF JUNEAU, ALASKA

UTILITY PLAN VIEW

DATE: Dec 17, 2021
PDC No. 21285JN
SHEET
C202

N:\Projects\0323.21285-CBJ_BRH_RRC\CIC200\cnst-21285JN.dwg PLOT: December 17, 2021 at: 10:45am

SHEET NOTES

1. PROVIDE ALL ADAPTERS, ELBOWS, AND OTHER FITTINGS NECESSARY TO CONNECT TO DISSIMILAR PIPE SIZES, MATERIALS AND DEPTHS.
2. CONTRACTOR TO PROTECT AND MAINTAIN EXISTING 12" DUCTILE IRON WATER MAIN UNTIL CONNECTION FROM NEW 16" HDPE TO EXISTING 12" DI WATER MAIN TAKES PLACE. AFTER 16" HDPE WATER LINE ACCEPTED THE 12" DI WATER SHALL BE FILLED WITH SLURRY.
3. FIELD LOCATE EXISTING 12" DUCTILE IRON WATER LINE AND 2" HDPE WATER SERVICE FOR AEL&P. SEE SHEET C105 FOR WATER LINE CONNECTION DETAILS FOR 16" HDPE AND EXISTING 2" HDPE WATER SERVICE. SEE THE SPECIAL WATER MAIN NOTE BELOW.
4. REMOVE EXISTING FIRE HYDRANT, SERVICE PIPE, GATE VALVE, 12" CMP AND HYDRANT PAD. INSTALL NEW FIRE HYDRANT ASSEMBLY PER CBJ STD. DETAIL No. 403, 404 AND 405 WITH PAVED ACCESS PAD AND PROTECTION BOLLARDS. INSTALL ANODES PER DETAIL 2, SHEET C102.
5. REMOVE AND REPLACE EXISTING ASPHALT PAVEMENT FOR NEW 16" HDPE WATER MAIN INSTALLATION. SEE DETAIL 2 ON SHEET C100 FOR TYPICAL SECTION.
6. PROTECT AND MAINTAIN ALL EXISTING UNDERGROUND UTILITIES WITHIN WORK LIMITS OF NEW 16" HDPE WATERLINE.
7. INSTALL RIGID BOARD INSULATION PER CBJ STD DETAIL No. 412.
8. DISTURBED AREAS TO RECEIVE 3" DEPTH TOPSOIL AND SEED.

!! SPECIAL WATER MAIN NOTE !!

THE EXISTING 12" DUCTILE IRON WATER MAIN IS THE PRIMARY SUPPLY LINE FOR A 2" HDPE WATER SERVICE TO AEL&P. THIS SERVICE ALSO SUPPLIES WATER TO DIPAC. THE MAXIMUM ALLOWABLE SHUTDOWN TIME FOR THE 2" HDPE SERVICE IS 8 HOURS AND CAN ONLY HAPPEN ON ONE DAY, THE WEEK OF MAY 16, 2022 OR THE WEEK OF MAY 23, 2022. THE ACTUAL WATER SHUTDOWN DATE WILL BE DETERMINED BY BRYAN FARREL (463-6339) WITH AEL&P. THE CONTRACTOR IS TO COORDINATE WITH AEL&P ON THIS DATE. WATER FLOW CAPACITY SHALL BE MAINTAINED IF THE CONTRACTOR PLANS TO INSTALL A TEMPORARY BYPASS LINE. ALL TEMPORARY WATER SYSTEM PLANS AND INTERRUPTIONS SHALL BE REVIEWED AND APPROVED BY THE LONI VANKIRK (723-4975) WITH THE CBJ WATER UTILITY DEPARTMENT AND BRYAN FARREL (463-6339) WITH AEL&P PRIOR TO IMPLEMENTATION. THE CONTRACTOR SHALL DEMONSTRATE THAT ADEQUATE LABOR-FORCE AND ALL PARTS AND TOOLS WILL BE PROVIDED TO COMPLETE THE WORK WITHIN THE APPROVED SHUTDOWN TIME.

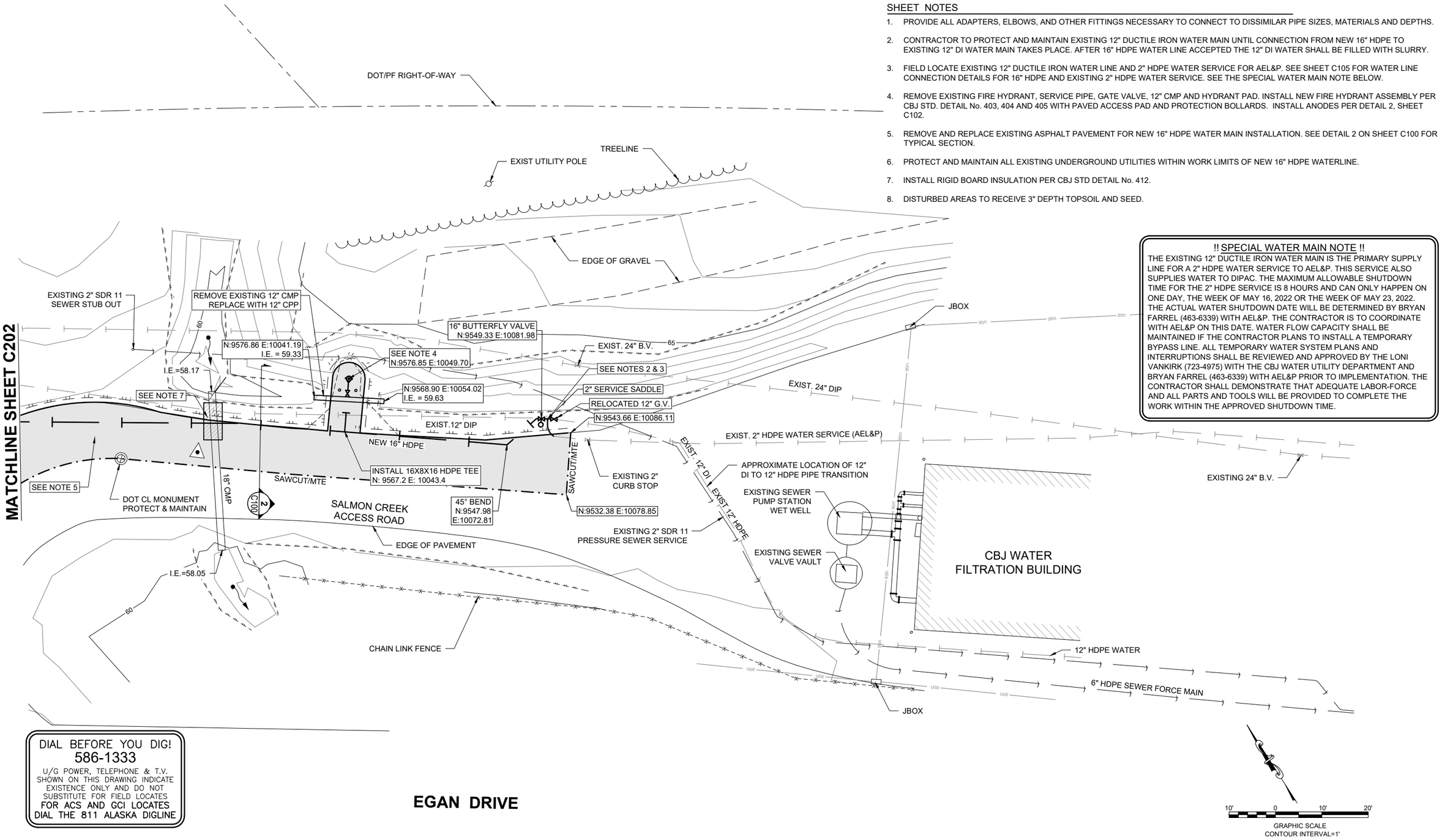

DIAL BEFORE YOU DIG!
586-1333
U/G POWER, TELEPHONE & T.V. SHOWN ON THIS DRAWING INDICATE EXISTENCE ONLY AND DO NOT SUBSTITUTE FOR FIELD LOCATES
FOR ACS AND GCI LOCATES DIAL THE 811 ALASKA DIGLINE

N:\Projects\#3323.21285-CBJ_BRH_RRC\CVC2001\mst-c21285JN.dwg PLOT: December 17, 2021 at: 10:45am

DESIGN	JMP
DRAWN	JMK
CHECK	JMP
APPROVED	JMP
FILE:	

No.	DATE	REVISION

CITY AND BOROUGH OF JUNEAU
ALASKA'S CAPITAL CITY
ENGINEERING & PUBLIC WORKS DEPARTMENT

PDC ENGINEERS
A BESPEG COMPANY
PLAN • DESIGN • CONSTRUCT
9109 Mendenhall Mall Rd. Ste. 4, Juneau, AK 99801
907.780.6060 | AECC605

STATE OF ALASKA
49 TH
JOSEPH M. PUSICH
CE 8152
REGISTERED PROFESSIONAL ENGINEER
12/17/2021

BARTLETT REGIONAL HOSPITAL
WATER AND SEWER UPGRADES

CBJ CONTRACT No. BE22-185
CITY & BOROUGH OF JUNEAU, ALASKA

UTILITY PLAN VIEW

DATE: Dec 17, 2021
PDC No. 21285JN

SHEET
C203

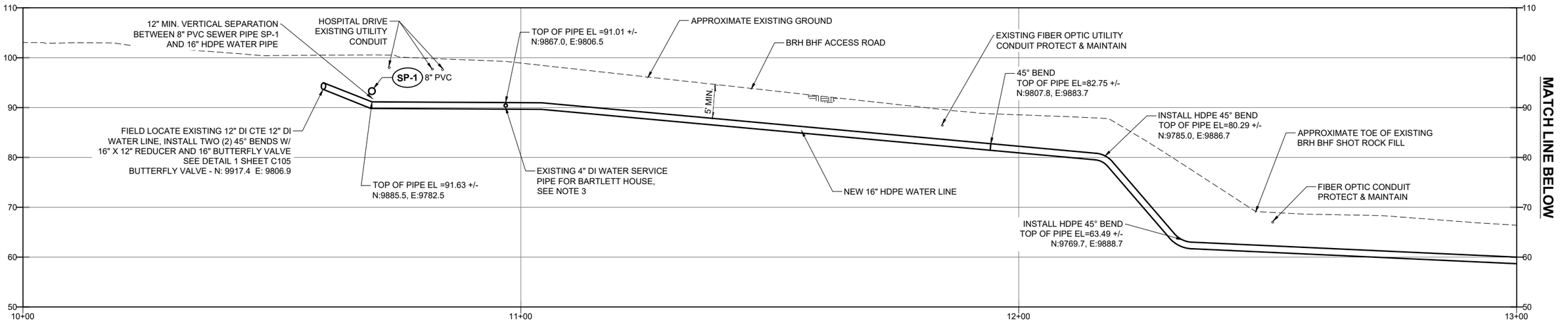

PROFILE NOTES:

1. EXISTING 12" DI WATER MAIN NOT SHOWN FOR CLARITY.
2. PROTECT AND MAINTAIN ALL EXISTING UNDERGROUND UTILITY LINES.
3. FIELD LOCATE EXISTING 4" DI WATER SERVICE TO BARTLETT HOUSE. INSTALL 16X6X16 HDPE TEE WITH 6" GV, AND 6" HDPE SERVICE PIPE. CTE 4" DI WITH REDUCER AND GALVANIC ANODE. PROVIDE TEMPORARY WATER SERVICE TO BARTLETT HOUSE.

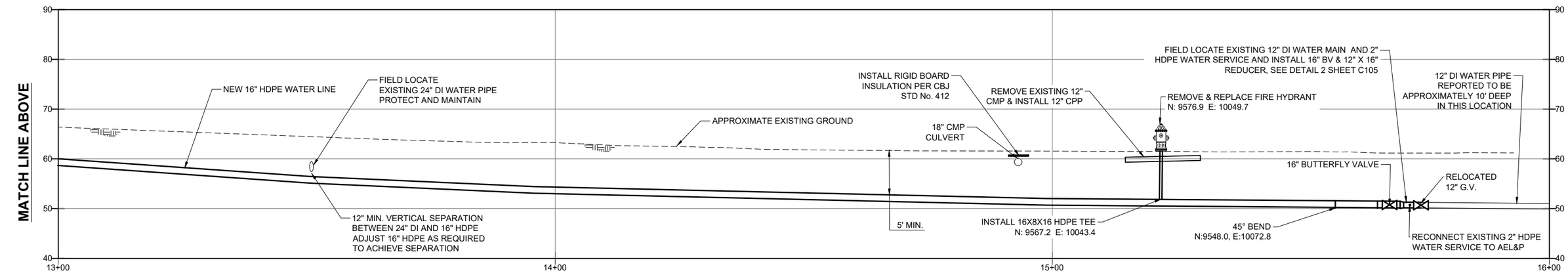

10' 0 10' 20'
GRAPHIC SCALE

N:\Projects\9323.21285-CBJ_BRH_RRC\CVC\2020\cnst-21285JN.dwg PLOT: December 17, 2021 at: 10:46am

DESIGN	JMP
DRAWN	JMK
CHECK	JMP
APPROVED	JMP
FILE:	

No.	DATE	REVISION

CITY AND BOROUGH OF JUNEAU
ALASKA'S CAPITAL CITY
ENGINEERING & PUBLIC WORKS DEPARTMENT

PDC ENGINEERS
PLAN • DESIGN • CONSTRUCT
A BESPEG COMPANY
9109 Mendenhall Mall Rd. Ste. 4, Juneau, AK 99801
907.780.6060 | AECC605

STATE OF ALASKA
49 TH
JOSEPH M. PUSICH
CE 8152
REGISTERED PROFESSIONAL ENGINEER
12/17/2021

BARTLETT REGIONAL HOSPITAL
WATER AND SEWER UPGRADES

CBJ CONTRACT No. BE22-185
CITY & BOROUGH OF JUNEAU, ALASKA

PROFILE - WATER LINE

DATE: Dec 17, 2021
PDC No. 21285JN

SHEET
C300

MH-1 TYPE-I, DROP MANHOLE*	
N: 9806.34	E: 9674.66
LID EL=	103.75
SP-1 IE=	92.04
EXIST 8" PVC (OUT) IE=	91.80
EXIST 4" PVC (IN) IE=	96.20

*W/ FIBERGLASS BASE LINER
REMOVE AND DISPOSE OF EXISTING SEWER MANHOLE.

MH-2 TYPE-I MH	
N: 9903.71	E: 9807.36
LID EL=	99.89
SP-1 IE=	92.75
SP-2 IE=	92.79
EXIST 8" PVC (IN) IE=	93.60

*W/ FIBERGLASS BASE LINER &
KOR-N-SEAL CONNECTORS

MH-3 TYPE-I DROP MANHOLE*	
N: 9949.67	E: 9873.47
LID EL=	97.96
SP-2 IE=	93.16
EXIST 8" PVC (IN) (NE) IE=	94.78
EXIST 8" PVC (IN) (N) IE=	93.50

*W/ FIBERGLASS BASE LINER
KOR-N-SEAL CONNECTORS
REMOVE AND DISPOSE OF EXISTING SEWER MANHOLE

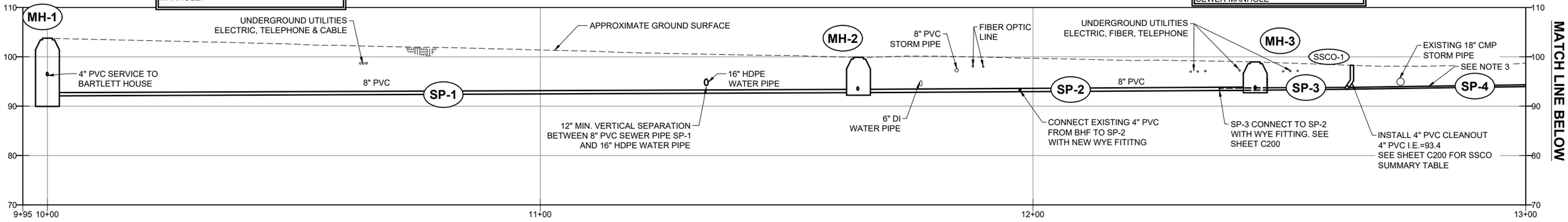

MATCH LINE BELOW

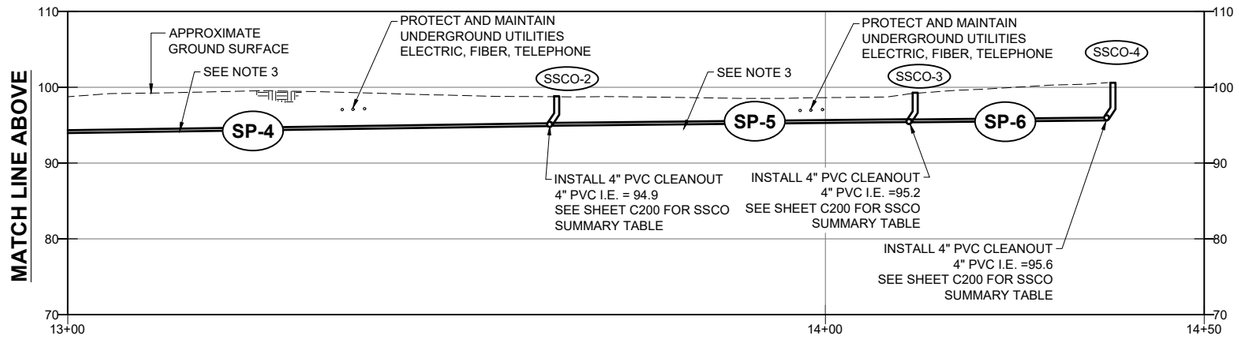

10' 0 10' 20'
GRAPHIC SCALE

PROFILE NOTES:

1. PROTECT AND MAINTAIN EXISTING UNDERGROUND UTILITIES.
2. REMOVE AND DISPOSE OF EXISTING 8" AND 4" PVC SEWER LINES. REMOVE AND DISPOSE OF EXISTING SANITARY SEWER MANHOLES.
3. BEFORE REPLACEMENT OF SEWER MAIN AND SERVICES, CONDUCT AN INVESTIGATIVE DIG TO DETERMINE ELEVATIONS OF THE SEWER SERVICE EXITING THE RAINFOREST RECOVERY CENTER DETOX ADDITION. REPORT ELEVATIONS TO THE ENGINEER.

N:\Projects\9323.21285-CBJ_BRH_RRC\CVC2022\cnst-c21285JN.dwg PLOT: December 17, 2021 at: 10:46am

DESIGN JMP
DRAWN JMK
CHECK JMP
APPROVED JMP
FILE:

No.	DATE	REVISION

CITY AND BOROUGH OF JUNEAU
ALASKA'S CAPITAL CITY
ENGINEERING & PUBLIC WORKS DEPARTMENT

PDC ENGINEERS
PLAN • DESIGN • CONSTRUCT
A BESPEG COMPANY
9109 Mendenhall Mall Rd. Ste. 4, Juneau, AK 99801
907.780.6060 | AECC605

STATE OF ALASKA
49 TH
Joseph M. Pusich
JOSEPH M. PUSICH
CE 8152
REGISTERED PROFESSIONAL ENGINEER
12/17/2021

BARTLETT REGIONAL HOSPITAL
WATER AND SEWER UPGRADES

CBJ CONTRACT No. BE22-185
CITY & BOROUGH OF JUNEAU, ALASKA

PROFILE - SEWER LINE

DATE: Dec 17, 2021
PDC No. 21285JN

SHEET
C301