CITY AND BOROUGH OF JUNEAU
ALASKA'S CAPITAL CITY

ADDENDUM TO THE CONTRACT

for the

Douglas Harbor Anode Installation
Contract No. DH20-032

ADDENDUM NO.: **ONE**

CURRENT DEADLINE FOR BIDS:
March 12, 2020

PREVIOUS ADDENDA: **NONE**

ISSUED BY:
City and Borough of Juneau
ENGINEERING DEPARTMENT
155 South Seward Street
Juneau, Alaska 99801

DATE ADDENDUM ISSUED: **February 19, 2020**

The following items of the contract are modified as herein indicated. All other items remain the same. This addendum has been issued and is posted online. Please refer to the CBJ Engineering Contracts Division webpage at: http://www.juneau.org/engineering_ftp/contracts/Contracts.php

PROJECT MANUAL:

Item No. 1 SECTION 00030 Notice Inviting Bids
Under Deadlines for Bids ***DELETE*** "Assembly Chambers", and ***REPLACE*** with "Conference Room 224".

DRAWINGS:

Add Drawings, Sheets 1-5, attached, labeled Addendum 1.

By: _____
Greg Smith,
Contract Administrator

Total number of pages contained within this Addendum: 6

Addendum 1

CITY & BOROUGH OF JUNEAU, ALASKA

DOUGLAS HARBOR ANODE INSTALLATION

CBJ CONTRACT - DH 20-032



LOCATION MAP

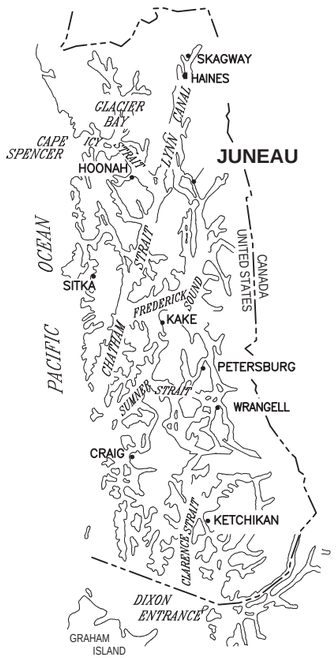

SOUTHEAST ALASKA



VICINITY MAP

SCALE MILES
0 ⅛ ¼

THIS PROJECT

AERIAL PHOTO FROM AEROMAP

PROJECT SCHEDULE	
DESCRIPTION	SCHEDULE
EARLIEST FIELD START	APRIL 1, 2020
SUBSTANTIAL COMPLETION	JUNE 5, 2020
FINAL COMPLETION	JUNE 12, 2020

TIDAL DATA	ELEV. (FT)
HIGHEST OBSERVED WATER LEVEL	+24.58
MEAN HIGHER HIGH WATER (MHHW)	+16.30
MEAN HIGH WATER (MHW)	+15.34
MEAN SEA LEVEL (MSL)	+8.56
MEAN TIDE LEVEL (MTL)	+8.47
MEAN LOWER WATER (MLW)	+1.60
MEAN LOWER LOW WATER (MLLW)	0.0
LOWEST OBSERVED WATER LEVEL	−6.12

FROM:
NOAA NOS/CO-OPS STATION ID: 9452210 JUNEAU, ALASKA

PND ENGINEERS, INC. (PND) IS NOT RESPONSIBLE FOR SAFETY PROGRAMS, METHODS OR PROCEDURES OF OPERATION, OR THE CONSTRUCTION OF THE DESIGN SHOWN ON THESE DRAWINGS. DRAWINGS ARE FOR THE USE OF THIS PROJECT ONLY AND ARE NOT INTENDED FOR REUSE WITHOUT WRITTEN APPROVAL FROM PND. DRAWINGS ARE ALSO NOT TO BE USED IN ANY MANNER THAT WOULD CONSTITUTE A DETRIMENT DIRECTLY OR INDIRECTLY TO PND.

CITY & BOROUGH OF JUNEAU DOCKS & HARBORS

REVISIONS

REV.	DATE	DESCRIPTION	DWN.	CKD.	APP.

P N D ENGINEERS, INC.
9360 Glacier Highway Ste 100
Juneau, Alaska 99801
Phone: 907-586-2093
Fax: 907-586-2099
www.pndengineers.com

DESIGN: PJD CHECKED: JLD
DRAWN: PJD APPROVED: JLD
SCALE: AS SHOWN

STATE OF ALASKA 49TH
John L. DeMuth CE-8847
REGISTERED PROFESSIONAL ENGINEER
DATE: 2/5/2020

CITY & BOROUGH OF JUNEAU, ALASKA
DOUGLAS HARBOR ANODE INSTALLATION
CBJ PROJECT - DH20-XXX

SHEET TITLE:
COVER SHEET, VICINITY MAP AND TIDAL DATA

PND PROJECT NO.: 192094 C.A.N. NO.: AECC250

SHEET 1 OF 5

Addendum 1

SCOPE OF WORK:

THE PROJECT SCOPE OF WORK INCLUDES: REPAIRING OWNER–FURNISHED ANODES, FURNISHING NEW ANODES, SURVEYING ANODE INSTALLATION ELEVATION, INSTALLING NEW AND REPAIRED ANODES ON STEEL PILES AT LOCATIONS INDICATED ON THE CONTRACT DRAWINGS, AND ANODE POTENTIAL READINGS AND CONTINUITY TESTING, AS INDICATED IN THE CONTRACT DOCUMENTS.

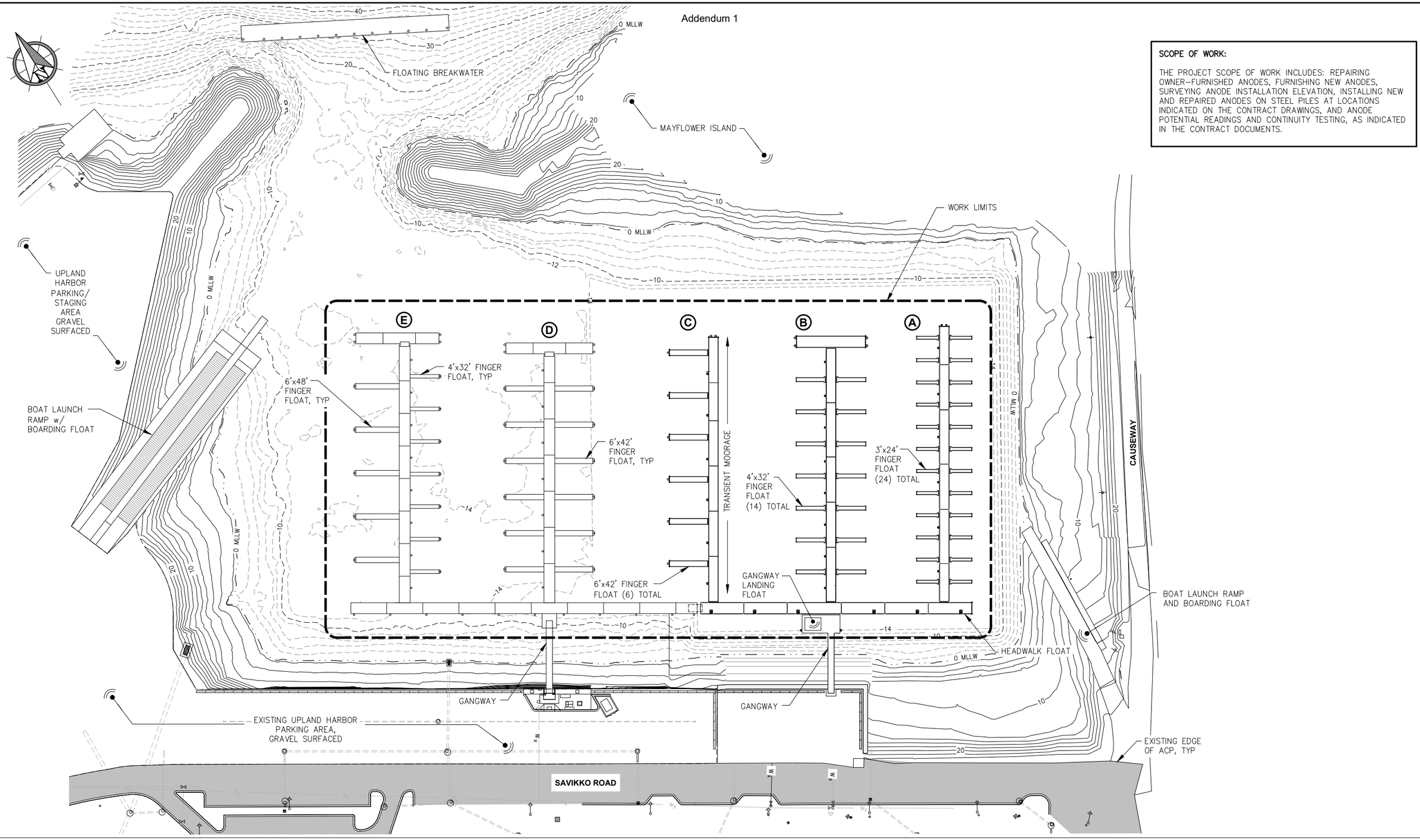

REVISIONS

REV.	DATE	DESCRIPTION	DWN.	CKD.	APP.

P N D ENGINEERS, INC.
9360 Glacier Highway Ste 100
Juneau, Alaska 99801
Phone: 907-586-2093
Fax: 907-586-2099
www.pndengineers.com

DESIGN: MS CHECKED: JLD
DRAWN: PJD APPROVED: JLD
SCALE: SCALE IN FEET 0 50 100 FT.
DATE: 2/5/2020

STATE OF ALASKA 49TH John L. DeMuth CE-8847 REGISTERED PROFESSIONAL ENGINEER

CITY & BOROUGH OF JUNEAU, ALASKA
DOUGLAS HARBOR ANODE INSTALLATION
CBJ PROJECT - DH20-XXX

SHEET TITLE: **GENERAL SITE PLAN**

PND PROJECT NO.: 192094 C.A.N. NO.: AECC250

SHEET 2 OF 5

Addendum 1

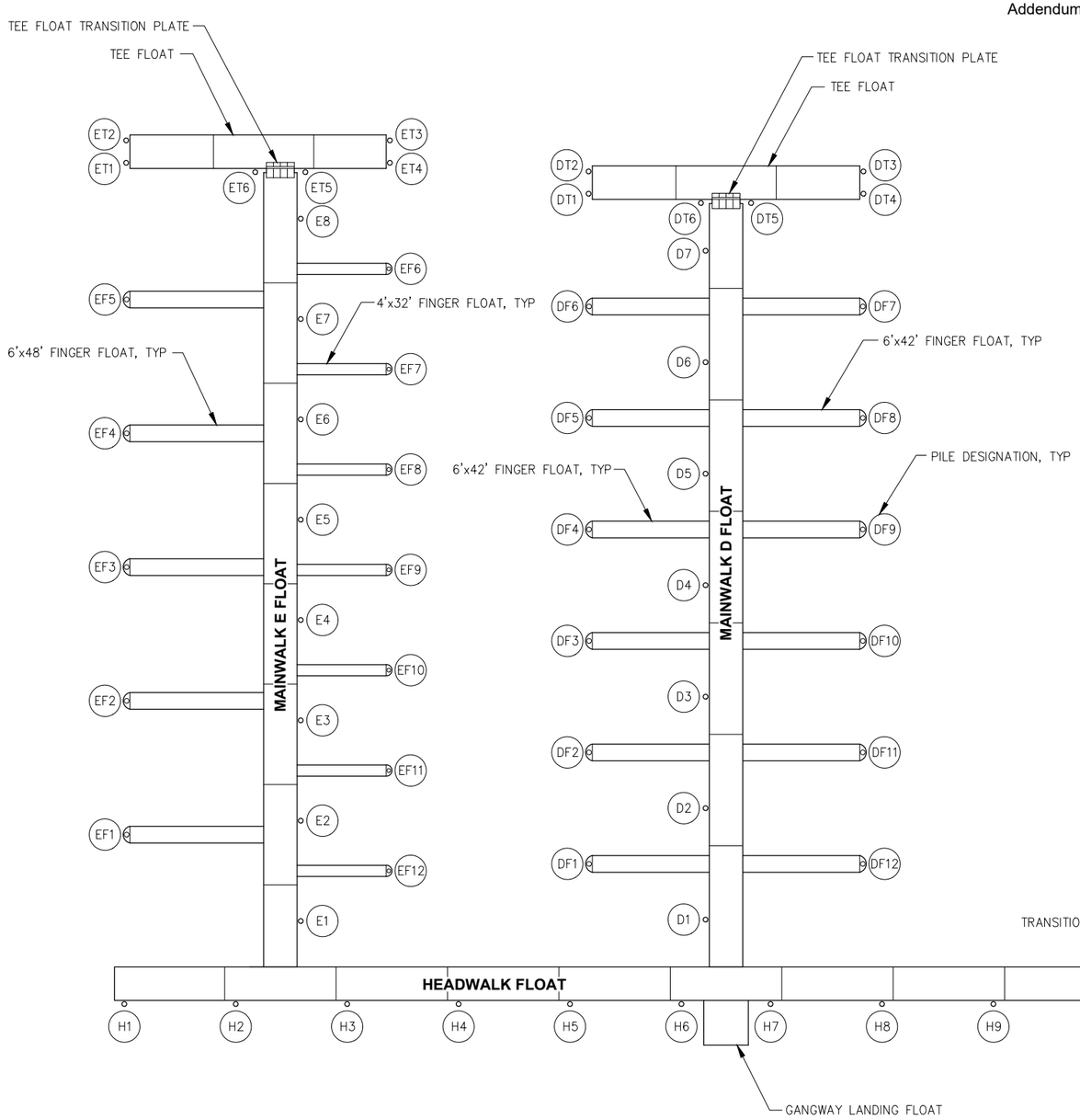

SCHEMATIC FLOAT PLAN

SCALE IN FEET

0 25 50 FT.

PILE ANODE INSTALLATION SCHEDULE

PILE NO.	LOCATION	PILE SIZE	ANODE TYPE	ANODE QUANTITY
1	D1	16"	B	2
2	D2	16"	B	2
3	D3	16"	B	2
4	D4	16"	B	2
5	D5	16"	B	2
6	D6	16"	B	2
7	D7	16"	B	2
8	DF1	16"	B	2
9	DF2	16"	B	2
10	DF3	16"	B	2
11	DF4	16"	B	2
12	DF5	16"	B	2
13	DF6	16"	B	2
14	DF7	16"	B	2
15	DF8	16"	B	2
16	DF9	16"	B	2
17	DF10	16"	B	2
18	DF11	16"	B	2
19	DF12	16"	B	2
20	DT1	16"	B	2
21	DT2	16"	B	2
22	DT3	16"	B	2
23	DT4	16"	B	2
24	DT5	16"	B	2
25	DT6	16"	B	2
26	E1	16"	B	2
27	E2	16"	B	2
28	E3	16"	B	2
29	E4	16"	B	2

PILE ANODE INSTALLATION SCHEDULE

PILE NO.	LOCATION	PILE SIZE	ANODE TYPE	ANODE QUANTITY
30	E5	16"	B	2
31	E6	16"	B	2
32	E7	16"	B	2
33	E8	16"	B	2
34	EF1	16"	B	2
35	EF2	16"	B	2
36	EF3	16"	B	2
37	EF4	16"	B	2
38	EF5	16"	B	2
39	EF6	16"	B	2
40	EF7	16"	B	2
41	EF8	16"	B	2
42	EF9	16"	B	2
43	EF10	16"	B	2
44	EF11	16"	B	2
45	EF12	16"	B	2
46	ET1	16"	B	2
47	ET2	16"	B	2
48	ET3	16"	B	2
49	ET4	16"	B	2
50	ET5	16"	B	2
51	ET6	16"	B	2
52	H1	16"	B	2
53	H2	16"	B	2
54	H3	16"	B	2
55	H4	16"	B	2
56	H5	16"	B	2
57	H6	16"	B	2
58	H7	16"	B	2
59	H8	16"	B	2
60	H9	16"	B	2
61	H10	16"	B	2
62	H11	16"	B	2

REVISIONS

REV.	DATE	DESCRIPTION	DWN.	CKD.	APP.

P N D ENGINEERS, INC.
9360 Glacier Highway Ste 100
Juneau, Alaska 99801
Phone: 907-586-2093
Fax: 907-586-2099
www.pndengineers.com

DESIGN: JLD CHECKED: JLD
DRAWN: JLD APPROVED: JLD
SCALE: AS SHOWN
DATE: 2/5/2020

STATE OF ALASKA
49TH
John L. DeMuth
CE-8847
REGISTERED PROFESSIONAL ENGINEER

CITY & BOROUGH OF JUNEAU, ALASKA
DOUGLAS HARBOR ANODE INSTALLATION
CBJ PROJECT - DH20-XXX

SHEET TITLE:
MAINWALK D, E & HEADWALK PILE LAYOUT

PND PROJECT NO.: 192094 C.A.N. NO.: AECC250

SHEET 3 OF 5

Addendum 1

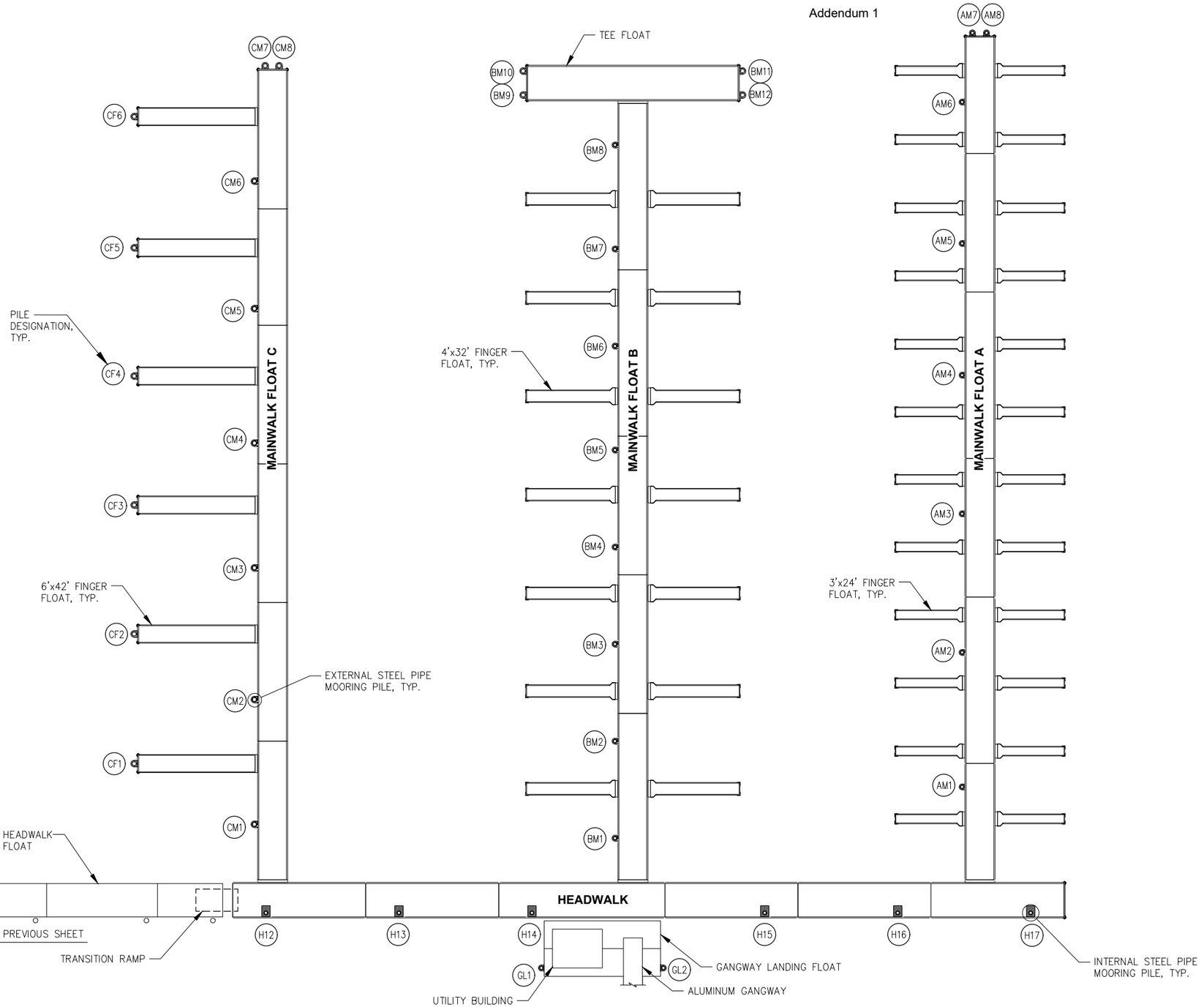

PILE ANODE INSTALLATION SCHEDULE

PILE NO.	LOCATION	PILE SIZE	ANODE TYPE	ANODE QUANTITY
63	GL1	12.75"ø	A	2
64	GL2	12.75"ø	A	2
65	H12	12.75"ø	A	2
66	H13	12.75"ø	A	2
67	H14	12.75"ø	A	2
68	H15	12.75"ø	A	2
69	H16	12.75"ø	A	2
70	H17	12.75"ø	A	2
71	AM1	12.75"ø	A	2
72	AM2	12.75"ø	A	2
73	AM3	12.75"ø	A	2
74	AM4	12.75"ø	A	2
75	AM5	12.75"ø	A	2
76	AM6	12.75"ø	A	2
77	AM7	12.75"ø	A	2
78	AM8	12.75"ø	A	2
79	BM1	12.75"ø	A	2
80	BM2	12.75"ø	A	2
81	BM3	12.75"ø	A	2
82	BM4	12.75"ø	A	2
83	BM5	12.75"ø	A	2
84	BM6	12.75"ø	A	2
85	BM7	12.75"ø	A	2
86	BM8	12.75"ø	A	2
87	BM9	16"ø	B	2
88	BM10	16"ø	B	2
89	BM11	16"ø	B	2
90	BM12	16"ø	B	2
91	CM1	16"ø	B	2
92	CM2	16"ø	B	2
93	CM3	16"ø	B	2
94	CM4	16"ø	B	2
95	CM5	16"ø	B	2
96	CM6	16"ø	B	2
97	CM7	16"ø	B	2
98	CM8	16"ø	B	2
99	CF1	16"ø	B	2
100	CF2	16"ø	B	2
101	CF3	16"ø	B	2
102	CF4	16"ø	B	2
103	CF5	16"ø	B	2
104	CF6	16"ø	B	2

REVISIONS

REV.	DATE	DESCRIPTION	DWN.	CKD.	APP.

P N D ENGINEERS, INC.
9360 Glacier Highway Ste 100
Juneau, Alaska 99801
Phone: 907-586-2093
Fax: 907-586-2099
www.pndengineers.com

DESIGN: MS CHECKED: JLD
DRAWN: WRB APPROVED: JLD

SCALE: SCALE IN FEET
0 20 40 FT.

STATE OF ALASKA
49 TH
John L. DeMuth
CE-8847
REGISTERED PROFESSIONAL ENGINEER
DATE: 2/5/2020

CITY & BOROUGH OF JUNEAU, ALASKA
DOUGLAS HARBOR ANODE INSTALLATION
CBJ PROJECT - DH20-XXX

SHEET TITLE:
MAINWALK A,B, C & HEADWALK PILE LAYOUT

PND PROJECT NO.: 192094
C.A.N. NO.: AECC250

SHEET 4 OF 5

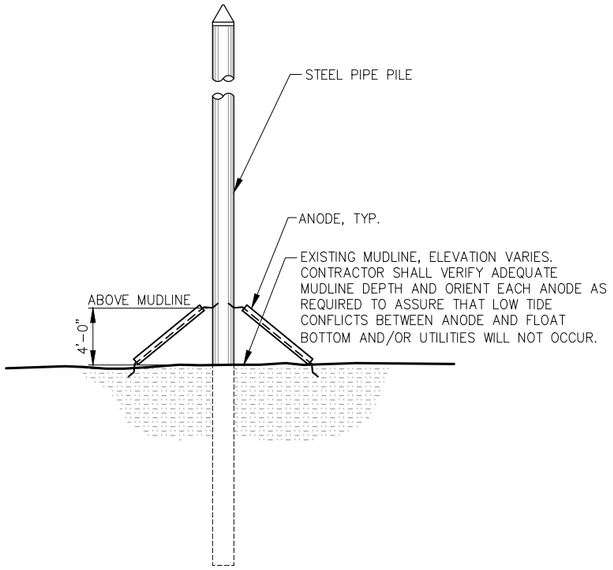

PILE ANODE INSTALLATION

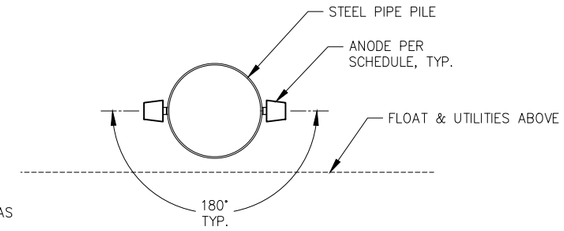

ANODE RADIAL LAYOUT PLAN

NOTE:
INSTALL ANODES IN ORIENTATION AS SHOWN TO CLEAR FLOATS AND FLOAT UTILITIES ABOVE.



OWNER - SUPPLIED ANODES

NOTE:
ANODES CURRENTLY LOCATED ON PALLETS STORED UNDER JUNEAU–DOUGLAS BRIDGE, APPROXIMATE 2.5 MILES FROM PROJECT SITE.

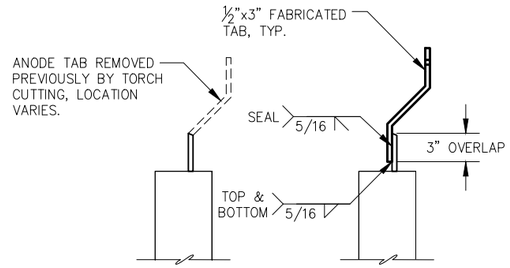

REPAIR PROCEDURE
(CUT TAB)

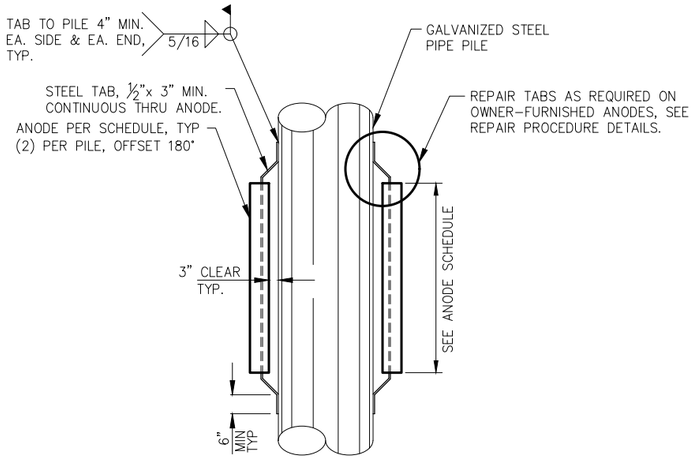

ANODE DETAIL

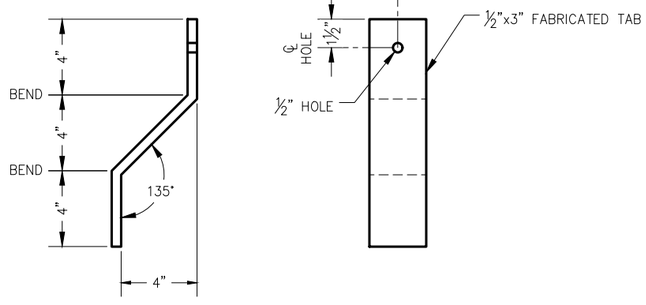

FABRICATED TAB
(FURNISH NEW FABRICATED TAB ON ALL OWNER–FURNISHED ANODES WITH CUT TABS.)

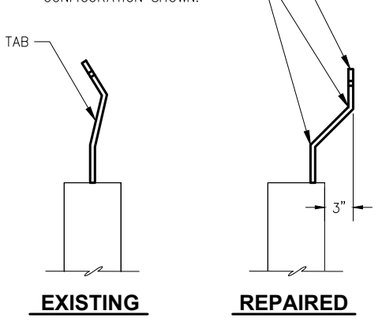

REPAIR PROCEDURE
(BENT TAB)

NOTE:
CONTRACTOR SHALL VERIFY QUANTITY OF OWNER–FURNISHED ANODES PRIOR TO ORDERING NEW ANODES, AND NOTIFY OWNER IF DISCREPANCY NOTED.

ANODE INSTALLATION SCHEDULE

PILE DIAMETER	TYPE	DIMENSIONS	NOMINAL WT.	QUANTITY REQ'D	OWNER PROVIDED	CONTRACTOR SUPPLIED
12¾"ø	A	6"x6"x60"	216 LBS	48	34	14
16"ø	B	6"x6"x72"	260 LBS	160	60	100

REVISIONS

REV.	DATE	DESCRIPTION	DWN.	CKD.	APP.

P N D ENGINEERS, INC.
9360 Glacier Highway Ste 100
Juneau, Alaska 99801
Phone: 907-586-2093
Fax: 907-586-2099
www.pndengineers.com

DESIGN: ____ CHECKED: JLD
DRAWN: ____ APPROVED: JLD
SCALE:

STATE OF ALASKA — 49TH — John L. DeMuth CE-8847 — REGISTERED PROFESSIONAL ENGINEER
DATE: 2/5/2020

CITY & BOROUGH OF JUNEAU, ALASKA
DOUGLAS HARBOR ANODE INSTALLATION
CBJ PROJECT - DH20-XXX

SHEET TITLE: **ANODE DETAILS**

PND PROJECT NO.: 192094 | C.A.N. NO.: AECC250

SHEET 5 OF 5