# EAGLES EDGE PARK IMPROVEMENTS

## CBJ CONTRACT No. BE23-124

### CITY & BOROUGH OF JUNEAU, ALASKA

| SHEET INDEX | |
|---|---|
| **SHEET No.** | **SHEET TITLE** |
| C001 | COVER SHEET |
| C002 | GENERAL NOTES, ABBREVIATIONS AND SYMBOLS |
| C100 | EXISTING SITE CONDITIONS |
| C101 | EXISTING PLAYGROUND PHOTOS |
| C102 | SITE DEMOLITION PLAN |
| C200 | SITE GRADING PLAN |
| C201 | GRADE POINT SUMMARY TABLE & FENCING PLAN |
| C300 | TYPICAL SECTIONS |
| C400 | CONSTRUCTION DETAILS |
| C401 | CONSTRUCTION DETAILS |
| C402 | CONSTRUCTION DETAILS |
| L101 | PLAYGROUND PLAN |
| L102 | PLAYGROUND FOOTING & SURFACING PLAN |
| L501 | DETAILS |
| L502 | SIGN DETAILS |




**PROJECT LOCATION MAP**

NTS

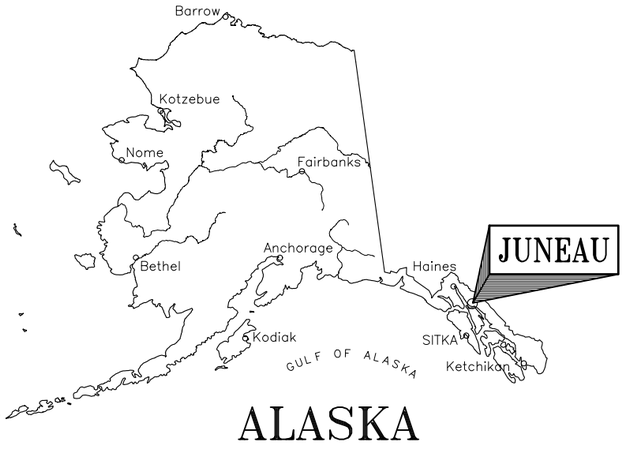


ALASKA

N:\Projects\I0323.22004-CBJ_Eagles_Edge\CIC\001cnst-I0323.22004.dwg PLOT: December 16, 2022 at: 8:27am

DESIGN MSM
DRAWN MSM
CHECK JMP
APPROVED JMP
FILE:

| No. | DATE | REVISION |
|---|---|---|

CITY AND BOROUGH OF JUNEAU
ALASKA'S CAPITAL CITY
ENGINEERING & PUBLIC WORKS DEPARTMENT


RESPEC
**Juneau, AK**
9109 Mendenhall Mall Rd, Ste. 4
Juneau, AK 99801
**Phone:** 907.780.6060
**Fax:** 907.586.3771
AECC163270


STATE OF ALASKA 49TH
JOSEPH M. PUSICH
CE 8152
12/12/2022
REGISTERED PROFESSIONAL ENGINEER

EAGLES EDGE
PARK IMPROVEMENTS
CBJ CONTRACT No. BE23-124
CITY & BOROUGH OF JUNEAU, ALASKA

COVER SHEET

DATE: Dec 12, 2022
RESPEC No. I0323.22004
SHEET C001

# GENERAL CONSTRUCTION NOTES

1. CBJ ENGINEERING STANDARD DETAILS BOOK FOR CIVIL ENGINEERING PROJECTS AND SUBDIVISION IMPROVEMENTS DATED AUGUST, 2011 AND CBJ ENGINEERING STANDARD SPECIFICATIONS DATED DECEMBER, 2003 ARE MADE A PART OF THIS CONTRACT, WITH CURRENT REVISIONS AND ERRATA AS APPLICABLE. DETAILS NOT SHOWN SHALL CONFORM THERETO WITH MODIFICATIONS SPECIFIED.

2. GRADES AND ALIGNMENTS OF FINAL SURFACING SHOWN ON THESE PLANS ARE SUBJECT TO MINOR REVISIONS AS APPROVED BY THE ENGINEER.

3. LOCATIONS OF EXISTING UNDERGROUND SEWER, WATER, TELEPHONE, CABLE TELEVISION, AND POWER UTILITIES SHOWN ON THESE PLANS WERE DERIVED FROM CBJ AS-BUILTS OR FIELD LOCATES. ACTUAL LOCATIONS MAY VARY FROM THOSE SHOWN. THE CONTRACTOR IS RESPONSIBLE FOR LOCATING, PROTECTING AND MAINTAINING THE UTILITIES THROUGHOUT THE CONSTRUCTION OF THIS PROJECT. ANY DAMAGE RESULTING TO THESE UNDERGROUND UTILITIES DURING CONSTRUCTION SHALL BE PAID FOR BY THE CONTRACTOR AND SHALL BE CONSIDERED INCIDENTAL TO THE CONTRACT. CALL "DIAL BEFORE YOU DIG" @ 586-1333 FOR UNDERGROUND UTILITY LOCATES AND 811 ALASKA DIG LINE FOR ACS AND GCI PRIOR TO ANY EXCAVATION ACTIVITIES.

**DIAL BEFORE YOU DIG!**
**586-1333**
UNDERGROUND POWER, TELEPHONE, T.V., COMMUNICATIONS, WATER AND WASTEWATER LINES ARE IN THE AREA. UTILITIES SHOWN HERE DO NOT SUBSTITUTE FOR FIELD LOCATES

**DIAL BEFORE YOU DIG!**
**811**
UNDERGROUND POWER, TELEPHONE, T.V., COMMUNICATIONS, WATER AND WASTEWATER LINES ARE IN THE AREA. UTILITIES SHOWN HERE DO NOT SUBSTITUTE FOR FIELD LOCATES

4. CONTRACTOR SHALL ASSURE GARBAGE PICKUP, DAILY MAIL SERVICE, FUEL AND SERVICE DELIVERIES WILL BE UNINTERRUPTED TO ALL RESIDENTS AFFECTED BY THIS PROJECT.

5. PROPERTY LINE LOCATIONS USED IN THESE PLANS WERE DERIVED FROM RECORD PLATS AND DO NOT REPRESENT A SUBDIVISION BOUNDARY SURVEY.

6. ALL SIGN INSTALLATIONS OR RELOCATIONS SHALL BE PERFORMED ACCORDING TO THE "MANUAL ON UNIFORM TRAFFIC CONTROL DEVICES" (M.U.T.C.D.) WITH THE ALASKA SUPPLEMENT.

7. ALL ITEMS DESIGNATED TO BE REMOVED SHALL BE DISPOSED OF AT AN APPROVED DISPOSAL SITE, EXCEPT AS NOTED IN THE CONTRACT DOCUMENTS.

8. THE CONTRACTOR SHALL NOT STORE MATERIALS OR EQUIPMENT OR OPERATE EQUIPMENT WITH ITS TRACKS OR WHEELS PLACED ON PRIVATE PROPERTY WITHOUT THE WRITTEN APPROVAL OF THE PROPERTY OWNER.

9. CONTRACTOR SHALL REFERENCE ALL EXISTING PROPERTY CORNER MONUMENTS (I.E. BRASS CAP MONUMENTS, REBARS OR CHISELED X'S) PRIOR TO CONSTRUCTION THAT WILL BE DISTURBED DURING HIS WORK, AND REMONUMENT AFTER CONSTRUCTION OPERATIONS. ALL WORK SHALL BE DONE BY, OR UNDER THE DIRECTION OF, AN ALASKA REGISTERED LAND SURVEYOR. ALL EXISTING PROPERTY CORNERS ARE NOT NECESSARILY SHOWN ON THE PLANS.

10. THE PLAN DRAWINGS DO NOT NECESSARILY SHOW ALL TREES AND SHRUBS THAT MAY BE ENCOUNTERED DURING CONSTRUCTION ACTIVITIES. NO TREES, SHRUBS OR LANDSCAPING ARE TO BE REMOVED OR DAMAGED, UNLESS SHOWN ON THE DRAWINGS OR DIRECTED BY THE ENGINEER.

11. AEL&P, ACS AND GCI MAY CONDUCT WORK WITHIN THE PROJECT LIMITS TO RELOCATE UTILITIES AND TO UPGRADE THEIR RESPECTIVE SYSTEMS. THE CONTRACTOR SHALL COORDINATE ITS ACTIVITIES WITH EACH UTILITY COMPANY AND PROVIDE ACCESS AS NECESSARY FOR UTILITY COMPANIES TO COMPLETE THEIR WORK.

12. THE CONTRACTOR SHALL INSTALL AND MAINTAIN ENGINEER APPROVED EROSION CONTROL DEVICES DURING CONSTRUCTION PER SECTION 01570 REQUIREMENTS.

13. THE CONTRACTOR SHALL PERFORM WORK IN ACCORDANCE WITH CBJ NOISE ORDINANCE REQUIREMENTS.

14. MATCH EXISTING GRADES AT PROJECT TIE IN LOCATIONS WHERE REQUIRED TO MATCH EXISTING ELEVATIONS AT ASPHALT SIDEWALK.

15. THE CONTRACTOR IS RESPONSIBLE FOR ANY AND ALL DAMAGES TO PRIVATE AND PUBLIC PROPERTY ASSOCIATED WITH CONSTRUCTION ACTIVITIES, INCLUDING BUT NOT LIMITED TO DAMAGES CAUSED BY COMPACTION EFFORTS. PROPERTY DISTURBED SHALL BE RESTORED TO ITS PRE-CONSTRUCTION CONDITION OR BETTER AT NO ADDITIONAL COST.

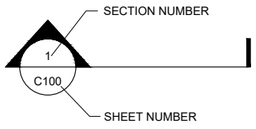


REFERENCE BUBBLE EXPLANATION
N.T.S.

# ABBREVIATIONS

| | |
|---|---|
| AC | ASBESTOS CEMENT |
| ACS | ALASKA COMMUNICATIONS SYSTEMS |
| AEL&P | ALASKA ELECTRIC LIGHT & POWER |
| APPROX | APPROXIMATE |
| BC | BACK OF CURB |
| CB | CATCH BASIN |
| CBJ | CITY & BOROUGH OF JUNEAU |
| CHB | CHORD BEARING |
| CHL | CHORD LENGTH |
| C/L | CENTERLINE |
| CI | CAST IRON |
| CLR | CLEAR |
| CMP | CORRUGATED METAL PIPE |
| CONC | CONCRETE |
| CONT | CONTINUOUS |
| CPP | CORRUGATED POLYETHYLENE PIPE |
| CTE | CONNECT TO EXISTING |
| DI | DUCTILE IRON |
| DIP | DUCTILE IRON PIPE |
| DIA | DIAMETER |
| E | EASTING |
| EG | EXISTING GRADE |
| EL | ELEVATION |
| EP | EDGE OF PAVEMENT |
| EXIST | EXISTING |
| EXP | EXPANSION |
| FG | FINISH GRADE |
| FH | FIRE HYDRANT |
| FL | FLOW LINE |
| GCI | GENERAL COMMUNICATION INC. |
| GV | GATE VALVE |
| HDPE | HIGH DENSITY POLYETHYLENE |
| HP | HIGH PRESSURE |
| IE | INVERT ELEVATION |
| L | LENGTH |
| LP | LOW POINT |
| LT | LEFT |
| MAX | MAXIMUM |
| MIN | MINIMUM |
| MJ | MECHANICAL JOINT |
| MTE | MATCH TO EXISTING |
| N | NORTHING |
| N/A | NOT APPLICABLE |
| NFS | NON-FROST SUSCEPTIBLE |
| NTS | NOT TO SCALE |
| OC | ON CENTER |
| PERF | PERFORATED |
| P/L | PROPERTY LINE |
| PT | PRESSURE TREATED |
| PVC | POLYVINYL CHLORIDE |
| R | RADIUS |
| ROW | RIGHT-OF-WAY |
| RP | RADIUS POINT |
| RT | RIGHT |
| SDMH | STORM DRAIN MANHOLE |
| SS | SANITARY SEWER |
| SSCO | SANITARY SEWER CLEANOUT |
| SSMH | SANITARY SEWER MANHOLE |
| STA | STATION |
| STD | STANDARD |
| TBG | TOP BACK OF GUTTER |
| TBM | TEMPORARY BENCH MARK |
| TC | TOP OF CONCRETE |
| TOB | TOP OF BANK |
| TOP | TOP OF PIPE |
| TYP | TYPICAL |
| UON | UNLESS OTHERWISE NOTED |
| VC | VERTICAL CURVE |
| VERT | VERTICAL |
| W/ | WITH |

# SYMBOLS

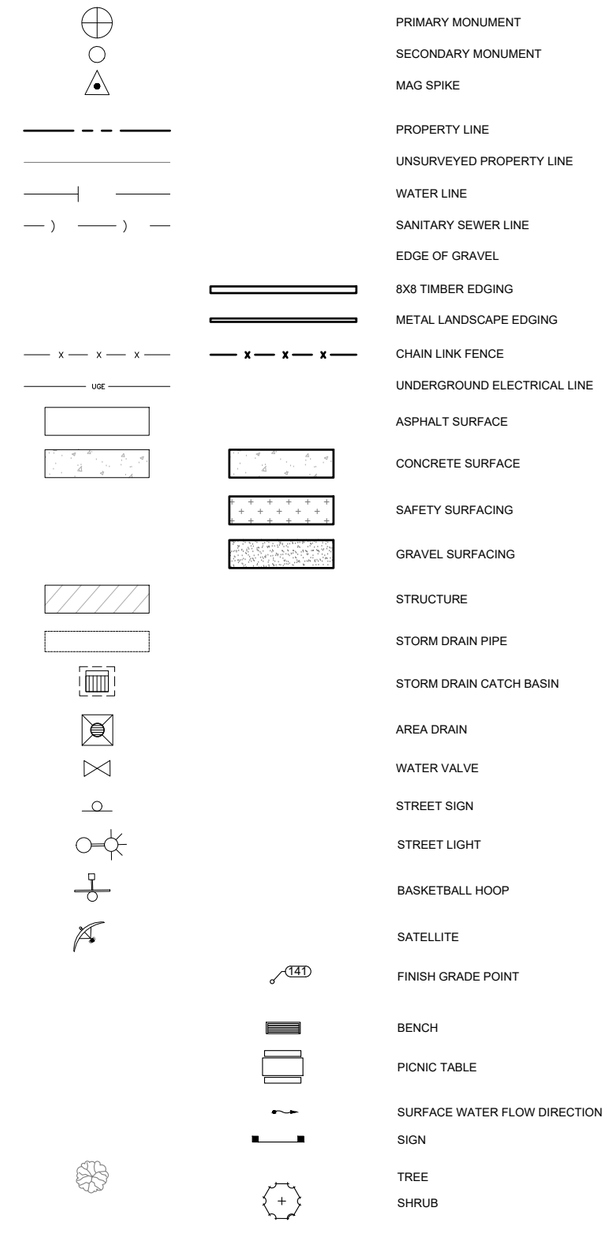


| | |
|---|---|
| DESIGN | MSM |
| DRAWN | MSM |
| CHECK | JMP |
| APPROVED | JMP |
| FILE: | |

| No. | DATE | REVISION |
|---|---|---|

CITY AND BOROUGH OF JUNEAU
ALASKA'S CAPITAL CITY
ENGINEERING & PUBLIC WORKS DEPARTMENT


RESPEC
**Juneau, AK**
9109 Mendenhall Mall Rd, Ste. 4
Juneau, AK 99801
**Phone:** 907.780.6060
**Fax:** 907.586.3771
AECC163270


STATE OF ALASKA
49TH
JOSEPH M. PUSICH
CE 8152
12/12/2022
REGISTERED PROFESSIONAL ENGINEER

# EAGLES EDGE PARK IMPROVEMENTS

CBJ CONTRACT No. BE23-124
CITY & BOROUGH OF JUNEAU, ALASKA

# GENERAL NOTES, ABBREVIATIONS AND SYMBOLS

DATE: Dec 12, 2022
RESPEC No. I0323.22004

SHEET
C002

N:\Projects\I0323.22004-CBJ_Eagles_Edge\CIC\000 const-I0323.22004.dwg P.LOT: December 16, 2022 at: 8:27am

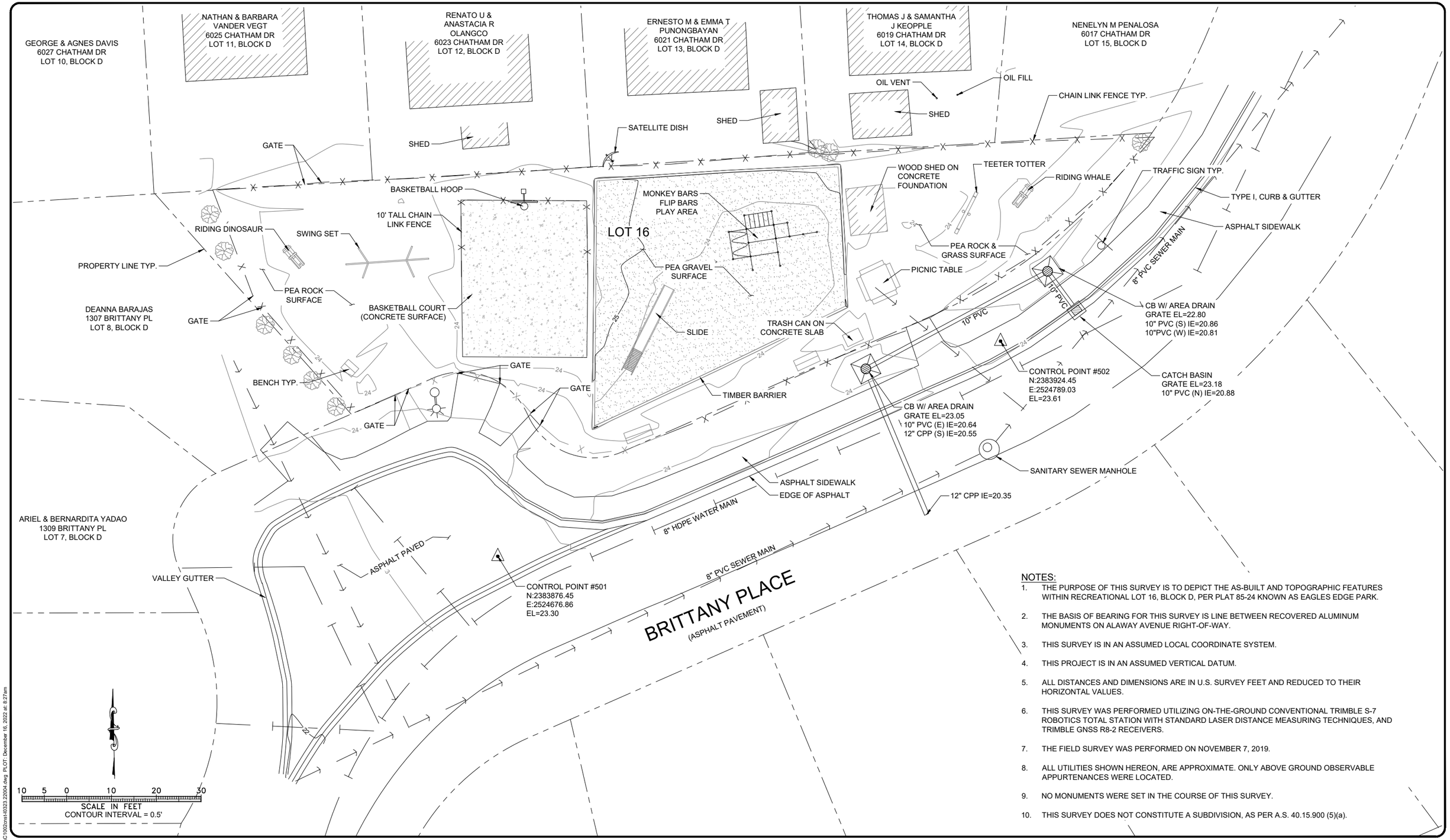


NOTES:

1. THE PURPOSE OF THIS SURVEY IS TO DEPICT THE AS-BUILT AND TOPOGRAPHIC FEATURES WITHIN RECREATIONAL LOT 16, BLOCK D, PER PLAT 85-24 KNOWN AS EAGLES EDGE PARK.
2. THE BASIS OF BEARING FOR THIS SURVEY IS LINE BETWEEN RECOVERED ALUMINUM MONUMENTS ON ALAWAY AVENUE RIGHT-OF-WAY.
3. THIS SURVEY IS IN AN ASSUMED LOCAL COORDINATE SYSTEM.
4. THIS PROJECT IS IN AN ASSUMED VERTICAL DATUM.
5. ALL DISTANCES AND DIMENSIONS ARE IN U.S. SURVEY FEET AND REDUCED TO THEIR HORIZONTAL VALUES.
6. THIS SURVEY WAS PERFORMED UTILIZING ON-THE-GROUND CONVENTIONAL TRIMBLE S-7 ROBOTICS TOTAL STATION WITH STANDARD LASER DISTANCE MEASURING TECHNIQUES, AND TRIMBLE GNSS R8-2 RECEIVERS.
7. THE FIELD SURVEY WAS PERFORMED ON NOVEMBER 7, 2019.
8. ALL UTILITIES SHOWN HEREON, ARE APPROXIMATE. ONLY ABOVE GROUND OBSERVABLE APPURTENANCES WERE LOCATED.
9. NO MONUMENTS WERE SET IN THE COURSE OF THIS SURVEY.
10. THIS SURVEY DOES NOT CONSTITUTE A SUBDIVISION, AS PER A.S. 40.15.900 (5)(a).

N:\Projects\I0323.22004-CBJ_Eagles_Edge\C\C1002cnst-I0323.22004.dwg PLOT: December 16, 2022 at: 8:27am

| | |
|---|---|
| DESIGN | MSM |
| DRAWN | MSM |
| CHECK | JMP |
| APPROVED | JMP |
| FILE: | |

| No. | DATE | REVISION |
|---|---|---|

CITY AND BOROUGH OF JUNEAU
ALASKA'S CAPITAL CITY
ENGINEERING & PUBLIC WORKS DEPARTMENT


RESPEC
Juneau, AK
9109 Mendenhall Mall Rd, Ste. 4
Juneau, AK 99801
Phone: 907.780.6060
Fax: 907.586.3771
AECC163270


STATE OF ALASKA
49TH
JOSEPH M. PUSICH
CE 8152
12/12/2022
REGISTERED PROFESSIONAL ENGINEER

# EAGLES EDGE PARK IMPROVEMENTS

CBJ CONTRACT No. BE23-124
CITY & BOROUGH OF JUNEAU, ALASKA

## EXISTING SITE CONDITIONS

DATE: Dec 12, 2022
RESPEC No. I0323.22004

SHEET C100



1 DINOSAUR AND SWING SET

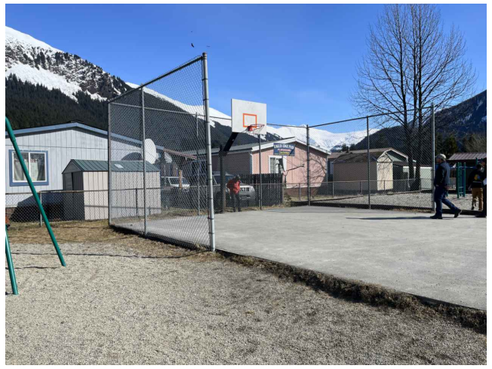

2 BASKETBALL COURT



3 SITE PHOTO LOOKING EAST



4 LOOKING EAST ALONG EXISTING FENCE LINE



5 SITE PHOTO LOOKING WEST



6 SITE PHOTO LOOKING EAST



7 EXISTING SLIDE



8 EXISTING PARK SHED



9 VIEW LOOKING WEST

N:\Projects\I0323.22004-CBJ_Eagles_Edge\C\C1002cnst-I0323.22004.dwg PLOT: December 16, 2022 at: 8:27am

| | |
|---|---|
| DESIGN | MSM |
| DRAWN | MSM |
| CHECK | JMP |
| APPROVED | JMP |
| FILE: | |

| No. | DATE | REVISION |
|---|---|---|

CITY AND BOROUGH OF JUNEAU
ALASKA'S CAPITAL CITY
ENGINEERING & PUBLIC WORKS DEPARTMENT


RESPEC
Juneau, AK
9109 Mendenhall Mall Rd, Ste. 4
Juneau, AK 99801
Phone: 907.780.6060
Fax: 907.586.3771
AECC163270


STATE OF ALASKA 49TH
JOSEPH M. PUSICH
CE 8152
12/12/2022
REGISTERED PROFESSIONAL ENGINEER

EAGLES EDGE
PARK IMPROVEMENTS
CBJ CONTRACT No. BE23-124
CITY & BOROUGH OF JUNEAU, ALASKA

EXISTING PLAYGROUND PHOTOS

DATE: Dec 12, 2022
RESPEC No. I0323.22004

SHEET
C101

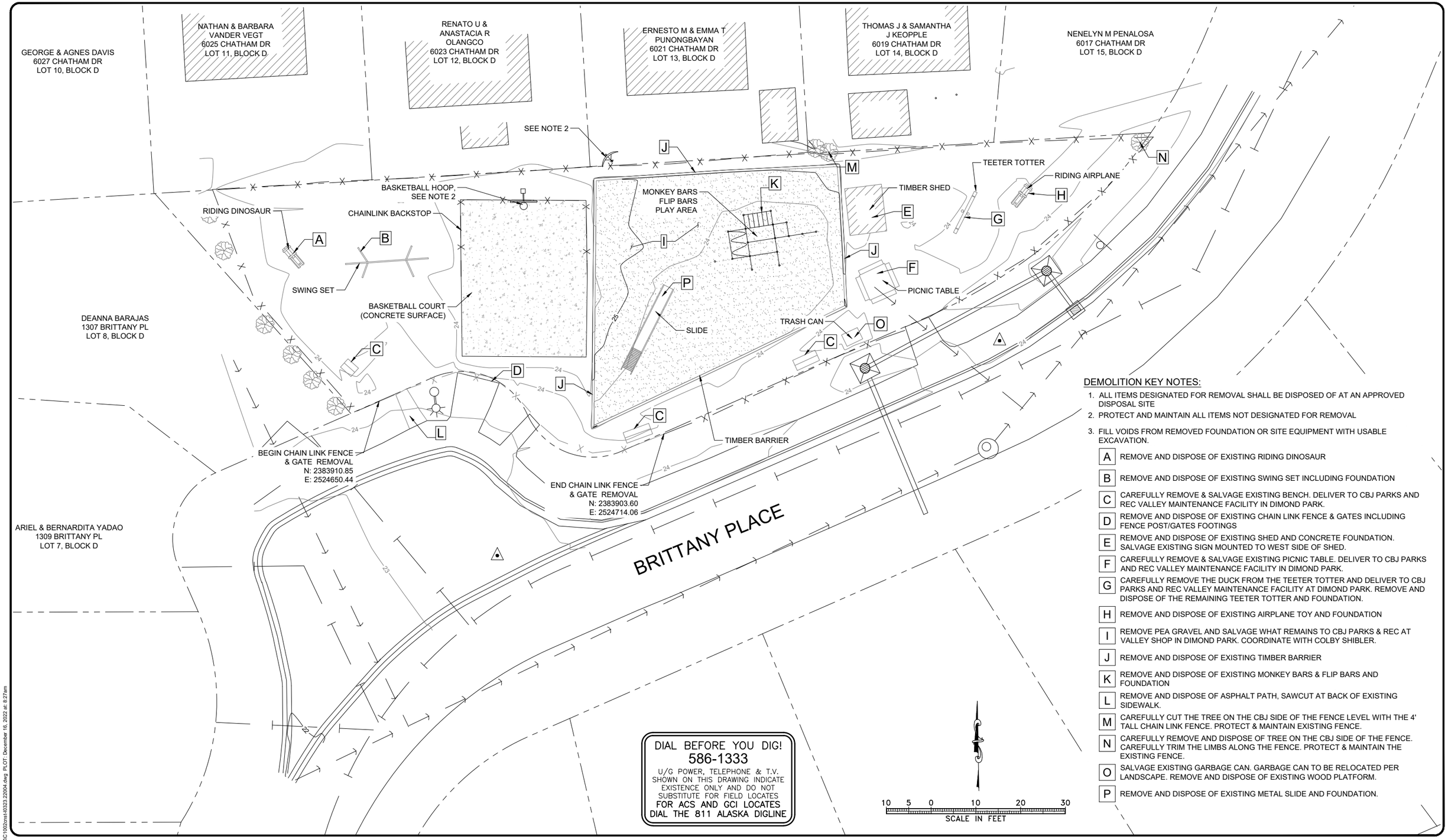


DIAL BEFORE YOU DIG!
**586-1333**
U/G POWER, TELEPHONE & T.V. SHOWN ON THIS DRAWING INDICATE EXISTENCE ONLY AND DO NOT SUBSTITUTE FOR FIELD LOCATES
FOR ACS AND GCI LOCATES DIAL THE 811 ALASKA DIGLINE

## DEMOLITION KEY NOTES:

1. ALL ITEMS DESIGNATED FOR REMOVAL SHALL BE DISPOSED OF AT AN APPROVED DISPOSAL SITE
2. PROTECT AND MAINTAIN ALL ITEMS NOT DESIGNATED FOR REMOVAL
3. FILL VOIDS FROM REMOVED FOUNDATION OR SITE EQUIPMENT WITH USABLE EXCAVATION.

- A — REMOVE AND DISPOSE OF EXISTING RIDING DINOSAUR
- B — REMOVE AND DISPOSE OF EXISTING SWING SET INCLUDING FOUNDATION
- C — CAREFULLY REMOVE & SALVAGE EXISTING BENCH. DELIVER TO CBJ PARKS AND REC VALLEY MAINTENANCE FACILITY IN DIMOND PARK.
- D — REMOVE AND DISPOSE OF EXISTING CHAIN LINK FENCE & GATES INCLUDING FENCE POST/GATES FOOTINGS
- E — REMOVE AND DISPOSE OF EXISTING SHED AND CONCRETE FOUNDATION. SALVAGE EXISTING SIGN MOUNTED TO WEST SIDE OF SHED.
- F — CAREFULLY REMOVE & SALVAGE EXISTING PICNIC TABLE. DELIVER TO CBJ PARKS AND REC VALLEY MAINTENANCE FACILITY IN DIMOND PARK.
- G — CAREFULLY REMOVE THE DUCK FROM THE TEETER TOTTER AND DELIVER TO CBJ PARKS AND REC VALLEY MAINTENANCE FACILITY AT DIMOND PARK. REMOVE AND DISPOSE OF THE REMAINING TEETER TOTTER AND FOUNDATION.
- H — REMOVE AND DISPOSE OF EXISTING AIRPLANE TOY AND FOUNDATION
- I — REMOVE PEA GRAVEL AND SALVAGE WHAT REMAINS TO CBJ PARKS & REC AT VALLEY SHOP IN DIMOND PARK. COORDINATE WITH COLBY SHIBLER.
- J — REMOVE AND DISPOSE OF EXISTING TIMBER BARRIER
- K — REMOVE AND DISPOSE OF EXISTING MONKEY BARS & FLIP BARS AND FOUNDATION
- L — REMOVE AND DISPOSE OF ASPHALT PATH, SAWCUT AT BACK OF EXISTING SIDEWALK.
- M — CAREFULLY CUT THE TREE ON THE CBJ SIDE OF THE FENCE LEVEL WITH THE 4' TALL CHAIN LINK FENCE. PROTECT & MAINTAIN EXISTING FENCE.
- N — CAREFULLY REMOVE AND DISPOSE OF TREE ON THE CBJ SIDE OF THE FENCE. CAREFULLY TRIM THE LIMBS ALONG THE FENCE. PROTECT & MAINTAIN THE EXISTING FENCE.
- O — SALVAGE EXISTING GARBAGE CAN. GARBAGE CAN TO BE RELOCATED PER LANDSCAPE. REMOVE AND DISPOSE OF EXISTING WOOD PLATFORM.
- P — REMOVE AND DISPOSE OF EXISTING METAL SLIDE AND FOUNDATION.

DESIGN MSM
DRAWN MSM
CHECK JMP
APPROVED JMP
FILE:

| No. | DATE | REVISION |
|---|---|---|

CITY AND BOROUGH OF JUNEAU
ALASKA'S CAPITAL CITY
ENGINEERING & PUBLIC WORKS DEPARTMENT

RESPEC
**Juneau, AK**
9109 Mendenhall Mall Rd, Ste. 4
Juneau, AK 99801
**Phone:** 907.780.6060
**Fax:** 907.586.3771
AECC163270

STATE OF ALASKA 49TH
JOSEPH M. PUSICH
CE 8152
12/12/2022
REGISTERED PROFESSIONAL ENGINEER

# EAGLES EDGE PARK IMPROVEMENTS
CBJ CONTRACT No. BE23-124
CITY & BOROUGH OF JUNEAU, ALASKA

## SITE DEMOLITION PLAN

DATE: Dec 12, 2022
RESPEC No. I0323.22004
SHEET C102

N:\Projects\I0323.22004-CBJ_Eagles_Edge\CIC\1002cnst-I0323.22004.dwg PLOT: December 16, 2022 at: 8:27am

SHEET C200 NOTES:

1. SEE SHEET C201 FOR GRADE POINT SUMMARY TABLE.
2. SEE SHEET C201 FOR FENCE LAYOUT PLAN.
3. PLACE 4" DEPTH TOPSOIL & HYDROSEED DISTURBED AREAS.

SHRUB, TYP SEE LANDSCAPE
EXISTING 4' TALL CHAIN LINK FENCE PROTECT & MAINTAIN
PROTECT & MAINTAIN
SEE LANDSCAPE FOR PLANTING DETAILS THIS AREA
EXISTING BASKETBALL HOOP
8X8 TIMBER EDGING, SEE LANDSCAPE
68'-1.6"
TOPSOIL & HYDROSEED LIMITS SEE LANDSCAPE
16'
ANCHOR TABLE TO CONCRETE SLAB SEE DETAIL 5 SHEET C402
CONCRETE SLAB SEE DETAIL 2 SHEET C402
7'-4"
17'-4"
32" MIN
SEE LANDSCAPE FOR PLAY EQUIPMENT AND SURFACING DETAILS
EXISTING CHAIN LINK FENCE
GRAVEL SURFACE
TOPSOIL & HYDROSEED LIMITS SEE LANDSCAPE
GRAVEL SURFACE TO BE FLUSH WITH TOP OF CONCRETE
7'-3"
7'
6'
EXISTING 4' TALL CHAIN LINK FENCE TO REMAIN
METAL EDGING, SEE LANDSCAPE
SAFETY SURFACING SEE LANDSCAPE
54'
EXISTING CONCRETE BASKETBALL COURT PROTECT & MAINTAIN
SAFETY SURFACING TO BE FLUSH WITH TOP OF CONCRETE
RELOCATED TRASH CAN ON CONCRETE SLAB SEE LANDSCAPE
D-1 GRAVEL SURFACE
6'-4"
INSTALL SINGLE 6' WIDE SWING GATE
METAL EDGING, SEE LANDSCAPE
10' CHAIN LINK FENCE SEE DETAIL SHEET C400
3'-6"
BENCH, SEE LANDSCAPE, TYP
7'
TOPSOIL & HYDROSEED LIMITS SEE LANDSCAPE
REGULATORY SIGN SEE LANDSCAPE
TOPSOIL & HYDROSEED LIMITS SEE LANDSCAPE
METAL EDGING, SEE LANDSCAPE
INSTALL 4' TALL CHAIN LINK FENCE
EXISTING 4' TALL CHAIN LINK FENCE TO REMAIN
INSTALL SINGLE 7' SWING GATE
MTE
10'
INSTALL DOUBLE 5' WIDE SWING GATE
MTE
BRITTANY PLACE (ASPHALT SURFACE)
ASPHALT SIDEWALK
CURB AND GUTTER

SCALE IN FEET: 5 2.5 0 5 10 15

DIAL BEFORE YOU DIG!
586-1333
U/G POWER, TELEPHONE & T.V. SHOWN ON THIS DRAWING INDICATE EXISTENCE ONLY AND DO NOT SUBSTITUTE FOR FIELD LOCATES
FOR ACS AND GCI LOCATES DIAL THE 811 ALASKA DIGLINE

N:\Projects\I0323.22004-CBJ_Eagles_Edge\CIC\200 const\I0323.22004.dwg PLOT: December 16, 2022 at: 8:27am

| | |
|---|---|
| DESIGN | MSM |
| DRAWN | MSM |
| CHECK | JMP |
| APPROVED | JMP |
| FILE: | |

| No. | DATE | REVISION |
|---|---|---|

CITY AND BOROUGH OF JUNEAU
ALASKA'S CAPITAL CITY
ENGINEERING & PUBLIC WORKS DEPARTMENT

RESPEC
Juneau, AK
9109 Mendenhall Mall Rd, Ste. 4
Juneau, AK 99801
**Phone:** 907.780.6060
**Fax:** 907.586.3771
AECC163270

STATE OF ALASKA 49TH
JOSEPH M. PUSICH
CE 8152
12/12/2022
REGISTERED PROFESSIONAL ENGINEER

# EAGLES EDGE PARK IMPROVEMENTS

CBJ CONTRACT No. BE23-124
CITY & BOROUGH OF JUNEAU, ALASKA

## SITE GRADING PLAN

DATE: Dec 12, 2022
RESPEC No. I0323.22004
SHEET C200

## GRADE POINT SUMMARY TABLE

| POINT No. | NORTHING | EASTING | ELEV | DESCRIPTION |
|---|---|---|---|---|
| 1 | 2383903.33 | 2524654.59 | 23.29 | EE/MTE |
| 2 | 2383906.12 | 2524660.18 | 23.39 | EE/MTE |
| 3 | 2383910.89 | 2524650.63 | 23.68 | EE |
| 4 | 2383913.64 | 2524656.63 | 23.80 | EE |
| 5 | 2383928.26 | 2524656.63 | 24.52 | EE |
| 6 | 2383933.22 | 2524661.60 | 24.79 | EE |
| 7 | 2383933.23 | 2524668.85 | 24.94 | EE/MTEC |
| 8 | 2383955.94 | 2524650.63 | 24.58 | EE |
| 9 | 2383955.94 | 2524668.63 | 24.90 | EE/MTEC |
| 10 | 2383920.80 | 2524696.73 | 24.94 | EE/MTE |
| 11 | 2383891.66 | 2524707.68 | 24.08 | EE/MTE |
| 12 | 2383895.27 | 2524717.01 | 24.09 | EE/MTE |
| 13 | 2383915.13 | 2524709.55 | 24.69 | EE |
| 14 | 2383920.80 | 2524713.47 | 24.63 | EE |
| 15 | 2383920.80 | 2524724.18 | 24.49 | EE |
| 16 | 2383917.30 | 2524724.18 | 24.47 | EE |
| 17 | 2383917.30 | 2524731.18 | 24.35 | EE |
| 18 | 2383920.80 | 2524731.18 | 24.39 | EE |
| 19 | 2383920.80 | 2524752.06 | 23.64 | EE |
| 20 | 2383926.91 | 2524767.82 | 23.76 | EE/MTE |
| 21 | 2383929.63 | 2524773.18 | 23.67 | EE/MTE |
| 22 | 2383941.54 | 2524765.44 | 24.51 | EE |
| 23 | 2383957.80 | 2524696.68 | 24.94 | TSS |
| 24 | 2383957.80 | 2524730.75 | 24.77 | TSS |
| 25 | 2383957.80 | 2524764.81 | 24.60 | TSS |
| 26 | 2383941.80 | 2524764.81 | 24.51 | TSS |
| 27 | 2383927.80 | 2524750.81 | 24.25 | TSS |
| 28 | 2383927.80 | 2524723.81 | 24.60 | TSS |
| 29 | 2383927.80 | 2524696.81 | 24.95 | TSS/MTEC |
| 30 | 2383955.76 | 2524696.68 | 24.94 | TSS/MTEC |
| 31 | 2383953.94 | 2524658.13 | 24.72 | EC |
| 32 | 2383953.94 | 2524665.46 | 24.85 | EC |
| 33 | 2383936.61 | 2524658.13 | 24.73 | EC |
| 34 | 2383936.61 | 2524665.46 | 24.87 | EC |
| 35 | 2383933.22 | 2524650.63 | 24.62 | EE |

## ABBREVIATIONS

| | |
|---|---|
| EC | EDGE OF CONCRETE |
| EE | EDGE OF EDGING |
| MTE | MATCH TO EXISTING |
| MTEC | MATCH TO EXISTING CONCRETE |
| TSS | TOP OF SAFETY SURFACING |

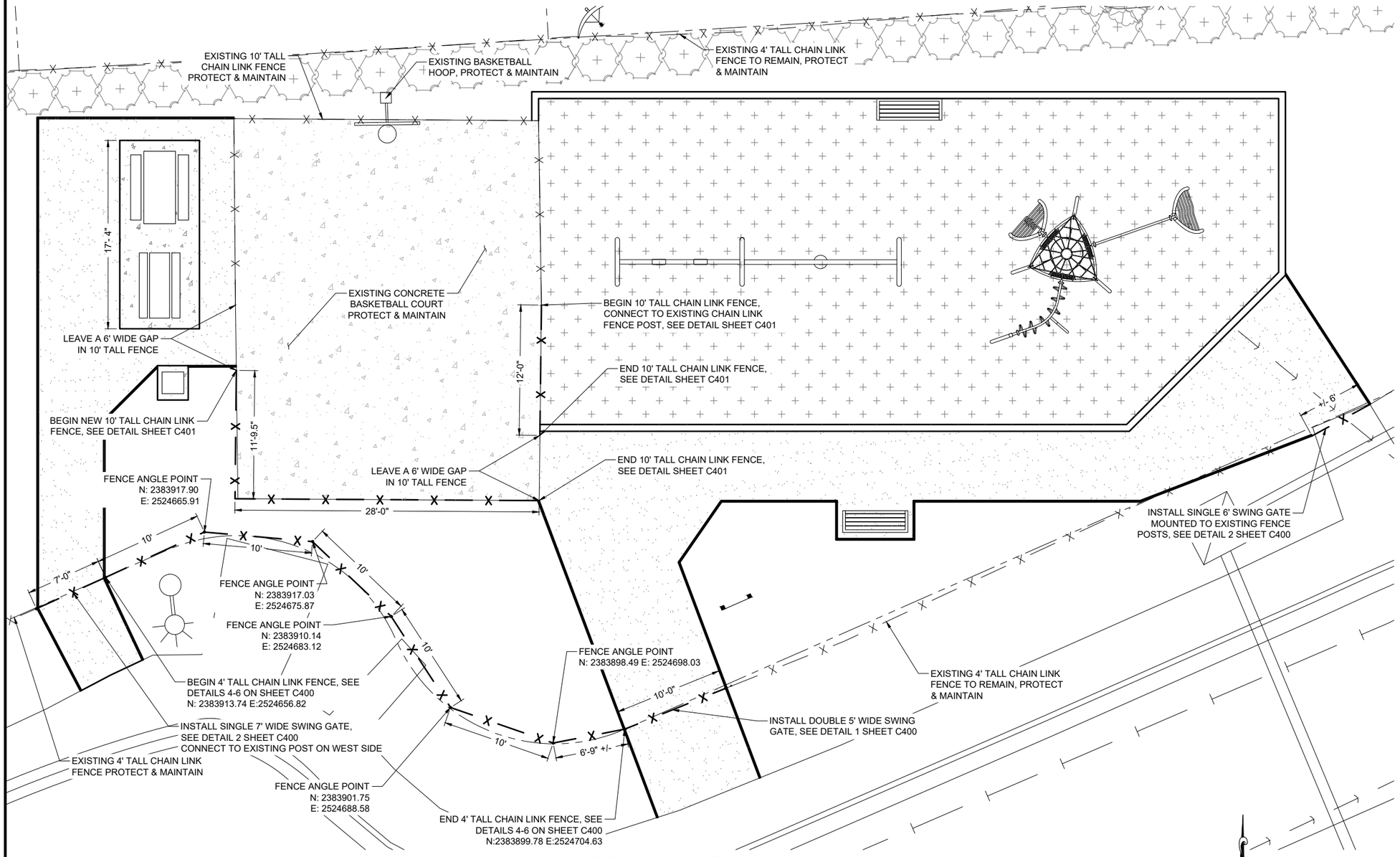


# FENCING PLAN

FENCE LAYOUT NOTES:

1. CONTRACTOR TO FIELD CONFIRM LAYOUT OF FENCE WITH CBJ PRIOR TO INSTALLATION.

DESIGN MSM
DRAWN MSM
CHECK JMP
APPROVED JMP
FILE:

| No. | DATE | REVISION |
|---|---|---|

CITY AND BOROUGH OF JUNEAU
ALASKA'S CAPITAL CITY
ENGINEERING & PUBLIC WORKS DEPARTMENT


RESPEC
**Juneau, AK**
9109 Mendenhall Mall Rd, Ste. 4
Juneau, AK 99801
**Phone:** 907.780.6060
**Fax:** 907.586.3771
AECC163270


STATE OF ALASKA 49TH
JOSEPH M. PUSICH
CE 8152
12/12/2022
REGISTERED PROFESSIONAL ENGINEER

# EAGLES EDGE PARK IMPROVEMENTS

CBJ CONTRACT No. BE23-124
CITY & BOROUGH OF JUNEAU, ALASKA

## GRADE POINT SUMMARY TABLE & FENCING PLAN

DATE: Dec 12, 2022
RESPEC No. I0323.22004

SHEET C201

N:\Projects\I0323.22004-CBJ_Eagles_Edge\CAD\2001cnst-I0323.22004.dwg PLOT: December 16, 2022 at: 8:27am

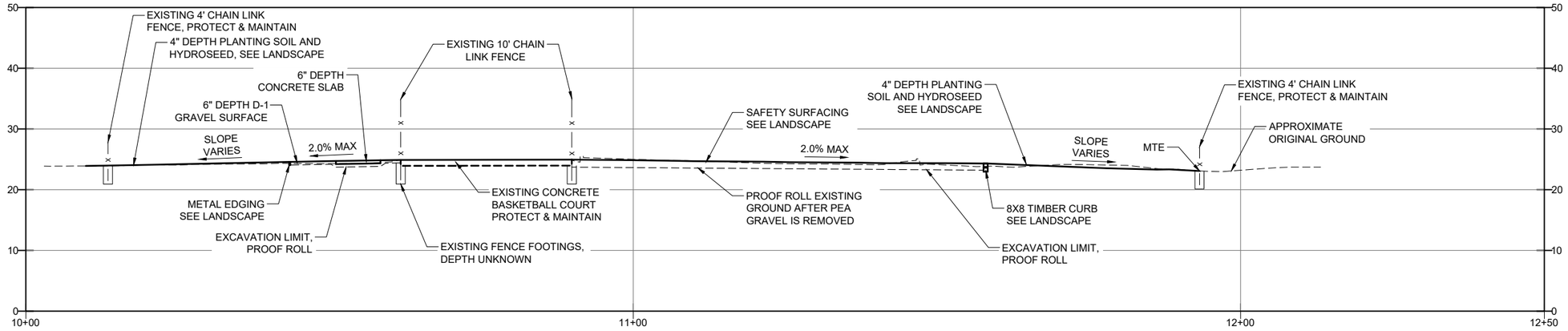


1 C300 **PARK TYPICAL SECTION**
SCALE: NTS

NOTE: SEE SHEET C200 FOR TYPICAL SECTION LOCATIONS

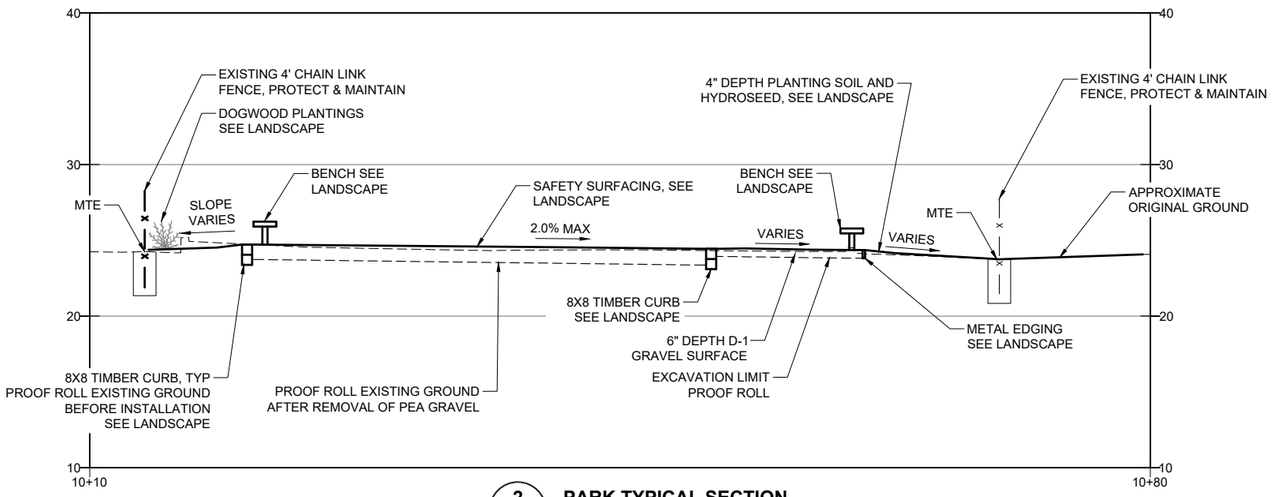


2 C300 **PARK TYPICAL SECTION**
SCALE: NTS

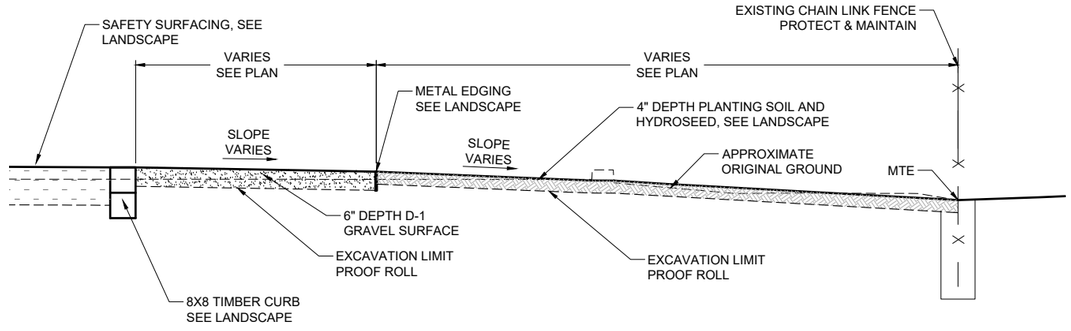


3 C300 **GRAVEL PATH TYPICAL SECTION**
SCALE: NTS

N:\Projects\I0323.22004-CBJ_Eagles_Edge\C\C3001cnst-I0323.22004.dwg PLOT: December 16, 2022 at: 8:27am

| | |
|---|---|
| DESIGN | MSM |
| DRAWN | MSM |
| CHECK | JMP |
| APPROVED | JMP |
| FILE: | |

| No. | DATE | REVISION |
|---|---|---|

CITY AND BOROUGH OF JUNEAU
ALASKA'S CAPITAL CITY
ENGINEERING & PUBLIC WORKS DEPARTMENT


RESPEC
Juneau, AK
9109 Mendenhall Mall Rd, Ste. 4
Juneau, AK 99801
Phone: 907.780.6060
Fax: 907.586.3771
AECC163270


STATE OF ALASKA 49TH
JOSEPH M. PUSICH
CE 8152
12/12/2022
REGISTERED PROFESSIONAL ENGINEER

# EAGLES EDGE PARK IMPROVEMENTS
CBJ CONTRACT No. BE23-124
CITY & BOROUGH OF JUNEAU, ALASKA

# TYPICAL SECTIONS

DATE: Dec 12, 2022
RESPEC No. I0323.22004

SHEET C300

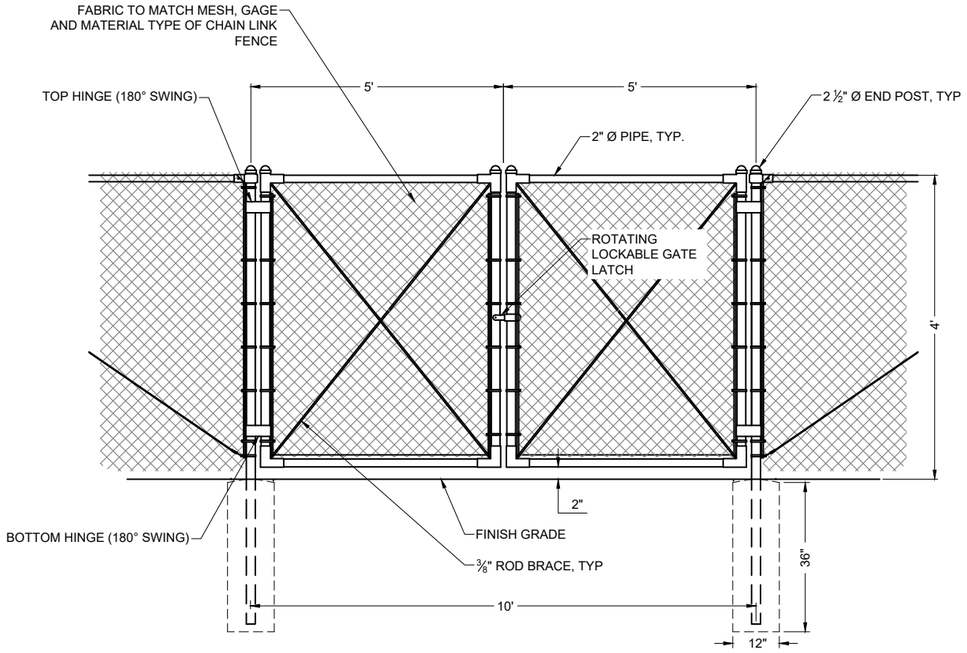


NOTE: 5' DOUBLE SWING GATE FRAMING, BRACING LATCHES AND OTHER HARDWARE ZINC COATING WEIGHT SHALL BE THE SAME AS THE CHAIN LINK FENCE FABRIC.

**1 / C400 — 5' WIDE DOUBLE SWING GATE DETAIL**

SCALE: NTS

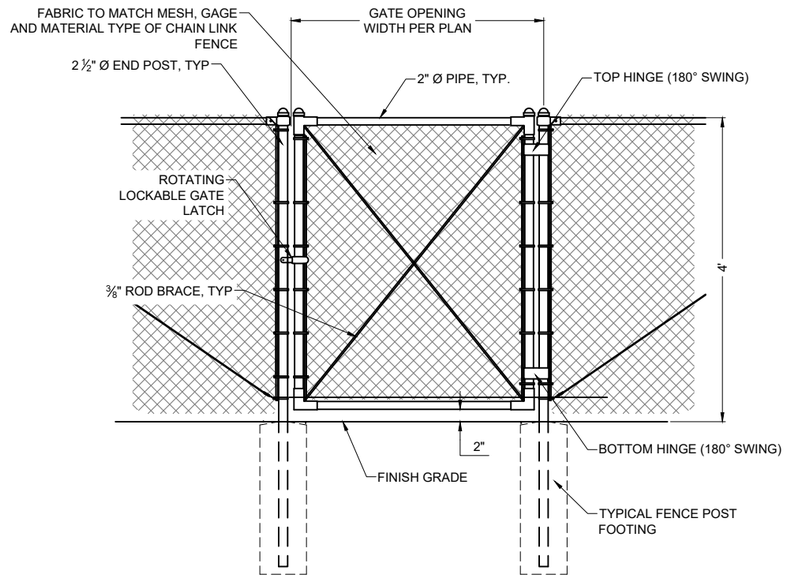


**2 / C400 — SINGLE SWING GATE DETAIL**

SCALE: NTS

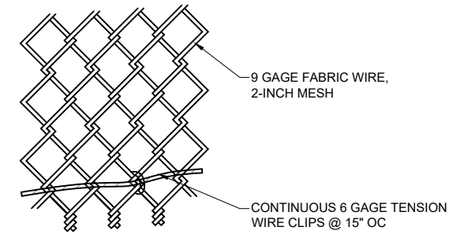


**3 / C400 — 4' FENCE CONNECTION AT BOTTOM**

SCALE: NTS

## FENCE NOTES:

1. POSTS SHALL BE SPACED EQUAL DISTANCES APART. MAXIMUM SPACING SHALL BE 10 FEET UNLESS DIRECTED OTHERWISE BY THE ENGINEER.
2. POST TOP CAPS SHALL BE SECURELY FASTENED TO POSTS, AND WEATHER TIGHT.
3. TRUSS RODS SHALL BE SECURELY FASTENED TO POST WITH BRACE BANDS WITH THREADED TAKE-UP ADAPTER FOR TRUSS RODS.
4. FABRIC SHALL BE STRETCHED TO A SMOOTH UNIFORM APPEARANCE. FABRIC SHOULD BE PLACED ON OUTSIDE OF FENCE POSTS.
5. DETAILS SHOWN INDICATE GENERAL DESIGN. DIMENSIONS MAY VARY AMONG MANUFACTURERS.
6. LINE, CORNER AND TERMINAL POSTS SHALL BE SET IN CONCRETE UNLESS SHOWN OTHERWISE ON THE PLANS.
7. FENCE POST AND RAIL DIAMETERS GIVEN ARE NOMINAL DIAMETERS.
8. ALL CHAIN LINK FENCE MESH TO BE GALVANIZED AFTER WEAVING.

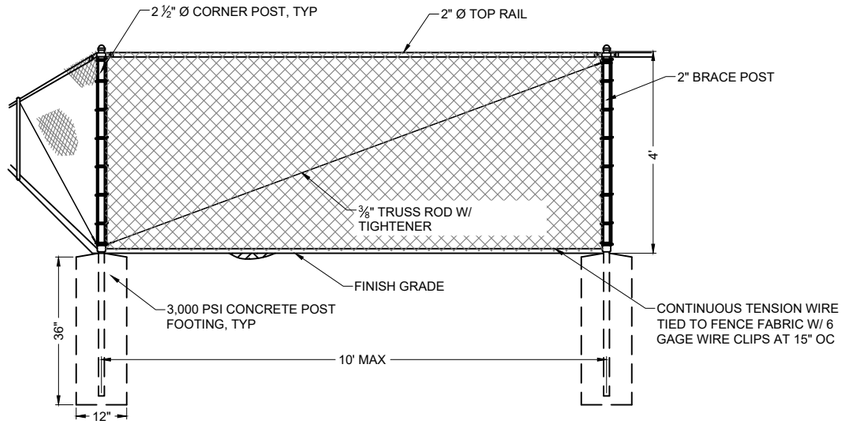


**4 / C400 — 4-FOOT CORNER OR TERMINAL POST DETAIL**

SCALE: NTS

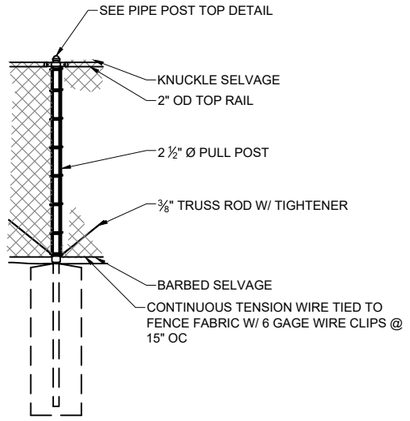


**5 / C400 — 4-FOOT PULL POST DETAIL**

SCALE: NTS

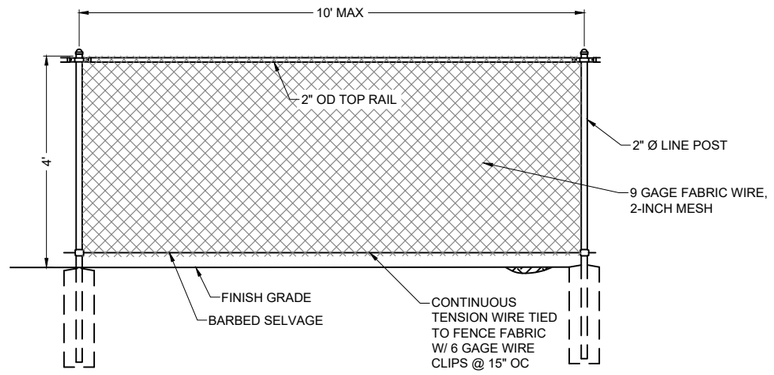


**6 / C400 — 4-FOOT FENCE ELEVATION**

SCALE: NTS

DESIGN MSM
DRAWN MSM
CHECK JMP
APPROVED JMP
FILE:

| No. | DATE | REVISION |
|---|---|---|

CITY AND BOROUGH OF JUNEAU
ALASKA'S CAPITAL CITY
ENGINEERING & PUBLIC WORKS DEPARTMENT

RESPEC
**Juneau, AK**
9109 Mendenhall Mall Rd, Ste. 4
Juneau, AK 99801
**Phone:** 907.780.6060
**Fax:** 907.586.3771
AECC163270

STATE OF ALASKA — 49TH — JOSEPH M. PUSICH — CE 8152 — 12/12/2022 — REGISTERED PROFESSIONAL ENGINEER

# EAGLES EDGE PARK IMPROVEMENTS

CBJ CONTRACT No. BE23-124
CITY & BOROUGH OF JUNEAU, ALASKA

## CONSTRUCTION DETAILS

DATE: Dec 12, 2022
RESPEC No. I0323.22004

SHEET C400

N:\Projects\I0323.22004-CBJ_Eagles_Edge\CAD\01const\I0323.22004.dwg PLOT: December 16, 2022 at: 8:27am

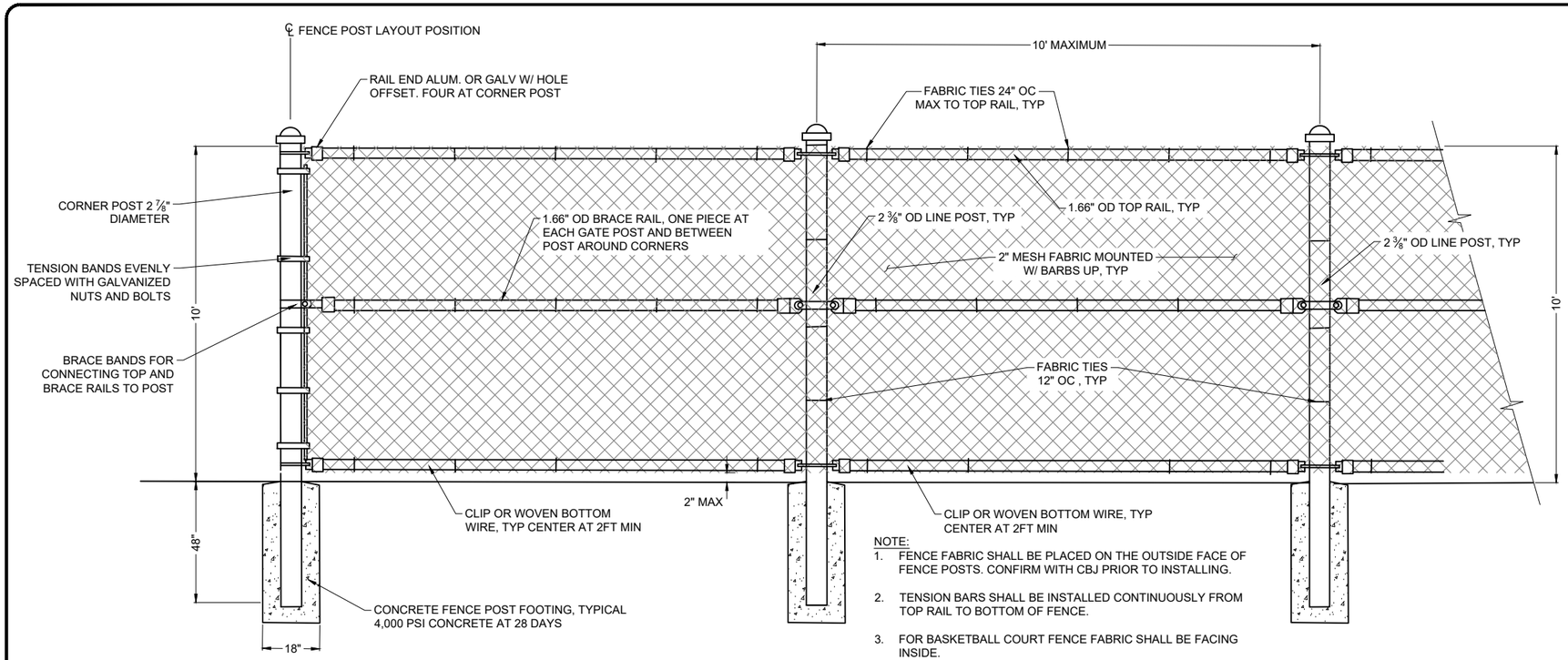


NOTE:
1. FENCE FABRIC SHALL BE PLACED ON THE OUTSIDE FACE OF FENCE POSTS. CONFIRM WITH CBJ PRIOR TO INSTALLING.
2. TENSION BARS SHALL BE INSTALLED CONTINUOUSLY FROM TOP RAIL TO BOTTOM OF FENCE.
3. FOR BASKETBALL COURT FENCE FABRIC SHALL BE FACING INSIDE.

**1 / C401 — 10' TALL CHAIN LINK FENCE DETAIL**
SCALE: NTS

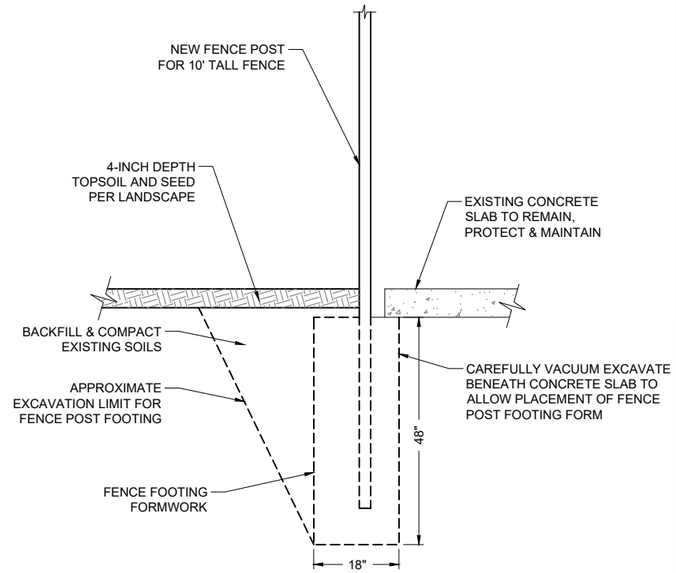


**2 / C401 — 10' TALL CHAIN LINK FENCE POST W/ TOPSOIL**
SCALE: NTS

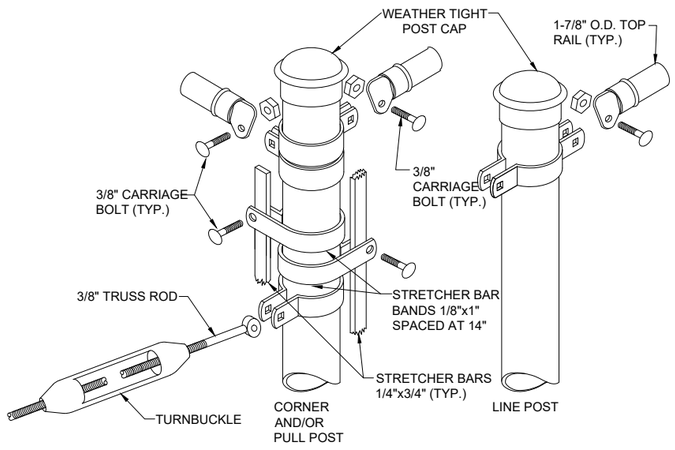


**3 / C401 — PIPE POST TOP DETAIL**
SCALE: NTS

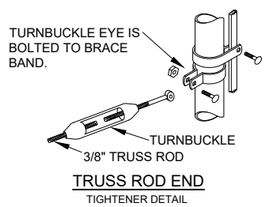


TRUSS ROD END
TIGHTENER DETAIL

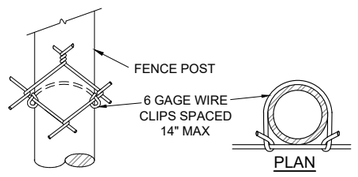


ELEVATION

PLAN

TYPICAL CONNECTION
FABRIC TO LINE POSTS

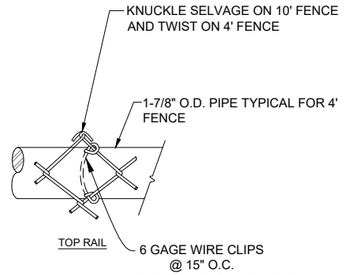


TYPICAL CONNECTION
FABRIC TO TOP RAIL

**4 / C401 — FENCE DETAILS**
SCALE: NTS

| | |
|---|---|
| DESIGN | MSM |
| DRAWN | MSM |
| CHECK | JMP |
| APPROVED | JMP |
| FILE: | |

| No. | DATE | REVISION |
|---|---|---|

CITY AND BOROUGH OF JUNEAU
ALASKA'S CAPITAL CITY
ENGINEERING & PUBLIC WORKS DEPARTMENT


RESPEC
**Juneau, AK**
9109 Mendenhall Mall Rd, Ste. 4
Juneau, AK 99801
**Phone:** 907.780.6060
**Fax:** 907.586.3771
AECC163270


STATE OF ALASKA — 49TH — JOSEPH M. PUSICH — CE 8152 — REGISTERED PROFESSIONAL ENGINEER — 12/12/2022

# EAGLES EDGE PARK IMPROVEMENTS
CBJ CONTRACT No. BE23-124
CITY & BOROUGH OF JUNEAU, ALASKA

## CONSTRUCTION DETAILS

DATE: Dec 12, 2022
RESPEC No. I0323.22004
SHEET C401

N:\Projects\I0323.22004-CBJ_Eagles_Edge\C\C401cnst-I0323.22004.dwg PLOT: December 16, 2022 at: 8:27am

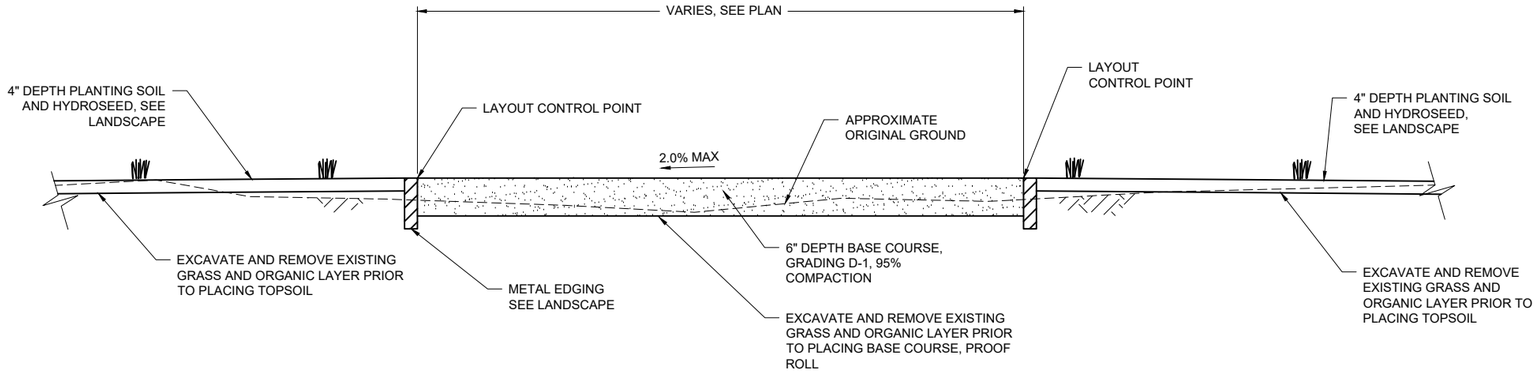


**1 / C402 — GRAVEL PATH DETAIL**

SCALE: NTS

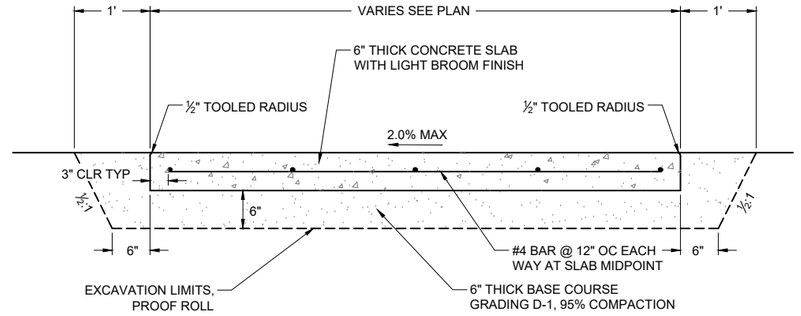


NOTES:

1. APPLIES TO TWO (2) PICNIC TABLE SLABS AND TRASH CAN SLAB (SEE LANDSCAPE).
2. SEE PLAN VIEW FOR LOCATIONS AND SIZES.
3. APPLY ASHFORD FORMULA CURING COMPOUND TO SURFACE.
4. SLAB CONCRETE COMPRESSIVE STRENGTH TO BE 4,000 PSI AT 28 DAYS.

**2 / C402 — CONCRETE SLAB SECTION**

SCALE: NTS

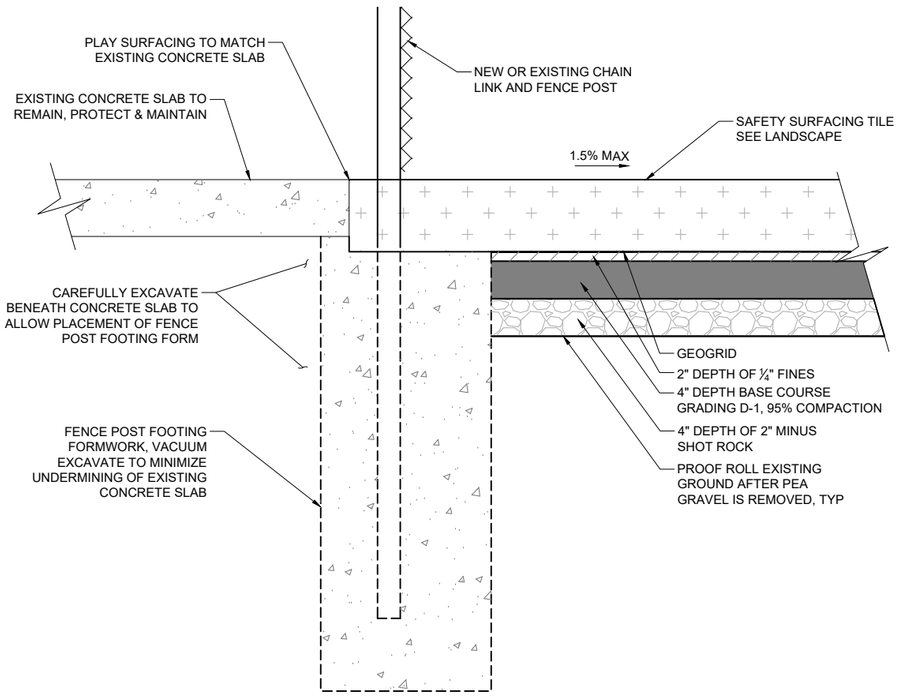


**3 / C402 — 10' TALL CHAINLINK FENCE POST WITH SAFETY SURFACING DETAIL AT CONCRETE COURT**

SCALE: NTS

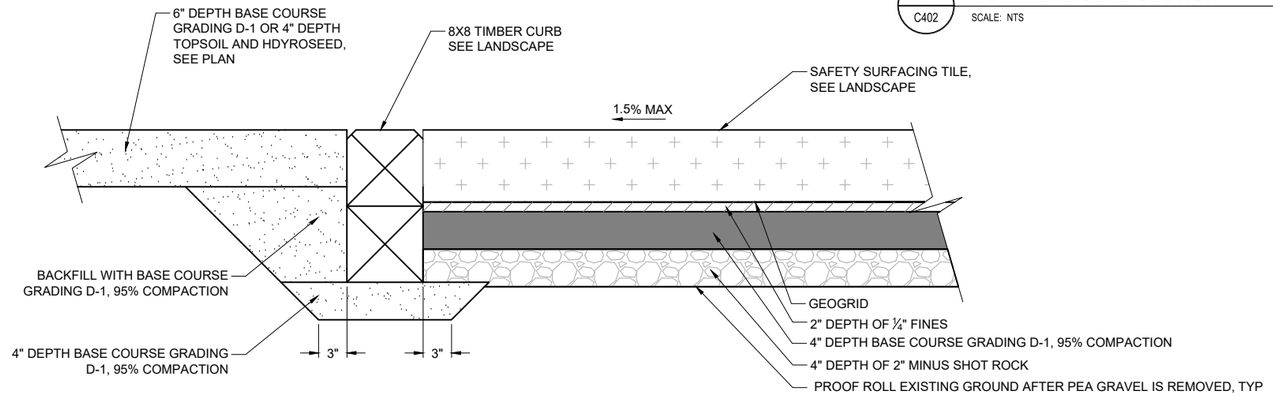


**4 / C402 — PLAYGROUND SURFACE & TIMBER CURB BASE TYPICAL SECTION**

SCALE: NTS

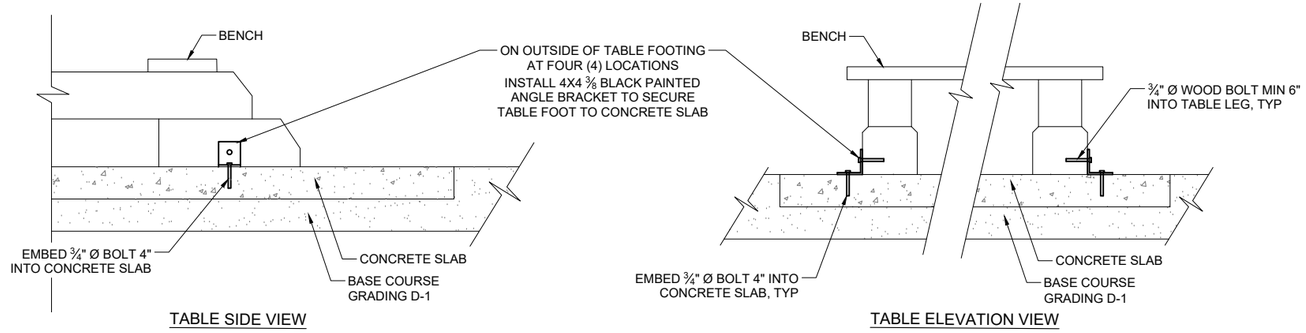


**5 / C402 — COVERED PICNIC TABLE SLAB CONNECTION DETAIL**

SCALE: NTS

N:\Projects\I0323.22004-CBJ_Eagles_Edge\CIC4001\cnst-I0323.22004.dwg PLOT: December 16, 2022 at 8:27am

| | |
|---|---|
| DESIGN | MSM |
| DRAWN | MSM |
| CHECK | JMP |
| APPROVED | JMP |
| FILE: | |

| No. | DATE | REVISION |
|---|---|---|

CITY AND BOROUGH OF JUNEAU
ALASKA'S CAPITAL CITY
ENGINEERING & PUBLIC WORKS DEPARTMENT


RESPEC
**Juneau, AK**
9109 Mendenhall Mall Rd, Ste. 4
Juneau, AK 99801
**Phone:** 907.780.6060
**Fax:** 907.586.3771
AECC163270


STATE OF ALASKA 49TH
JOSEPH M. PUSICH
CE 8152
12/12/2022
REGISTERED PROFESSIONAL ENGINEER

# EAGLES EDGE PARK IMPROVEMENTS

CBJ CONTRACT No. BE23-124
CITY & BOROUGH OF JUNEAU, ALASKA

## CONSTRUCTION DETAILS

DATE: Dec 12, 2022
RESPEC No. I0323.22004

SHEET
C402

# Planting Schedule

## Shrubs - See Detail: (1 / L501) Shrub Planting

| Qty. | Symbol | Label | Latin Name | Common Name | Size | Furnished | Notes |
|---|---|---|---|---|---|---|---|
| 52 | ⊙ | CS | Cornus sericea 'Baileyi' | Red-twig Dogwood | #5 | CG | |

## Miscellaneous

| | |
|---|---|
| Seed Mix | |

## General Notes:

1. All disturbed areas not indicated on plans are to receive 4" depth planting soil and seed.
2. Specification Sections 116800, 321800, 323300, 329000, 329300, and 329700, are a component of the landscape construction documents. All landscape work shall be based on these drawings in combination with the above referenced specification sections. If you do not have these specifications, request them. Submittal of bid shall be recognition that specifications have been received.

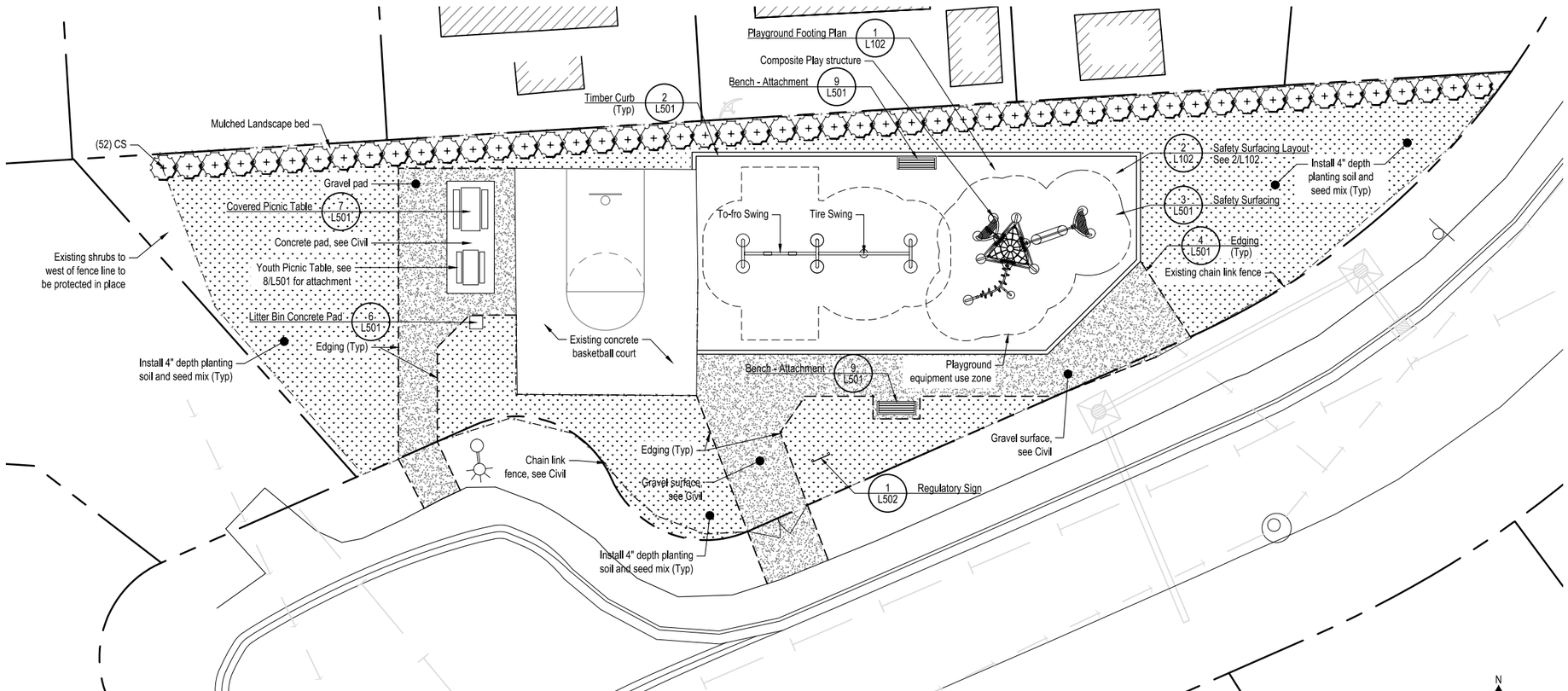


1 / L101 **Playground Plan**
SCALE: 1" = 10'-0" @22x34

| | |
|---|---|
| DESIGN | BL |
| DRAWN | BL |
| CHECK | CM |
| APPROVED | CM |
| FILE: | |

| No. | DATE | REVISION |
|---|---|---|

CITY AND BOROUGH OF JUNEAU
ALASKA'S CAPITAL CITY
ENGINEERING & PUBLIC WORKS DEPARTMENT


Corvus Design
Landscape Architecture
www.corvus-design.com
Juneau - 907.988.9000
119 Seward St. 99801
AECC #1195


STATE OF ALASKA
49 TH
Christopher R. Mertl
12/12/2022
No. 10440
REGISTERED PROFESSIONAL LANDSCAPE ARCHITECT
Corporate License #1195

# EAGLES EDGE PARK IMPROVEMENTS

CBJ CONTRACT No. BE23-124
CITY & BOROUGH OF JUNEAU, ALASKA

PLAYGROUND PLAN

DATE: December 12, 2022
RESPEC No. I0323.22004

SHEET
L101

J:\RSP-22-01 Eagles Edge Playground\2 - CAD\Corvus-Sheets.dwg PLOT: December 08, 2022 at 5:05pm

| FOOTINGS TABLE | | | |
|---|---|---|---|
| TYPE | DIAMETER/SIDE | DEPTH* | QTY. |
| A | 1'-6" | 2'-6" | 13 |
| B | 1'-2" | 2'-6" | 1 |
| D | 2'-0" | 2'-6" | 8 |
| *DEPTH IS MEASURED FROM FINISHED GRADE | | | |

See 5/L502

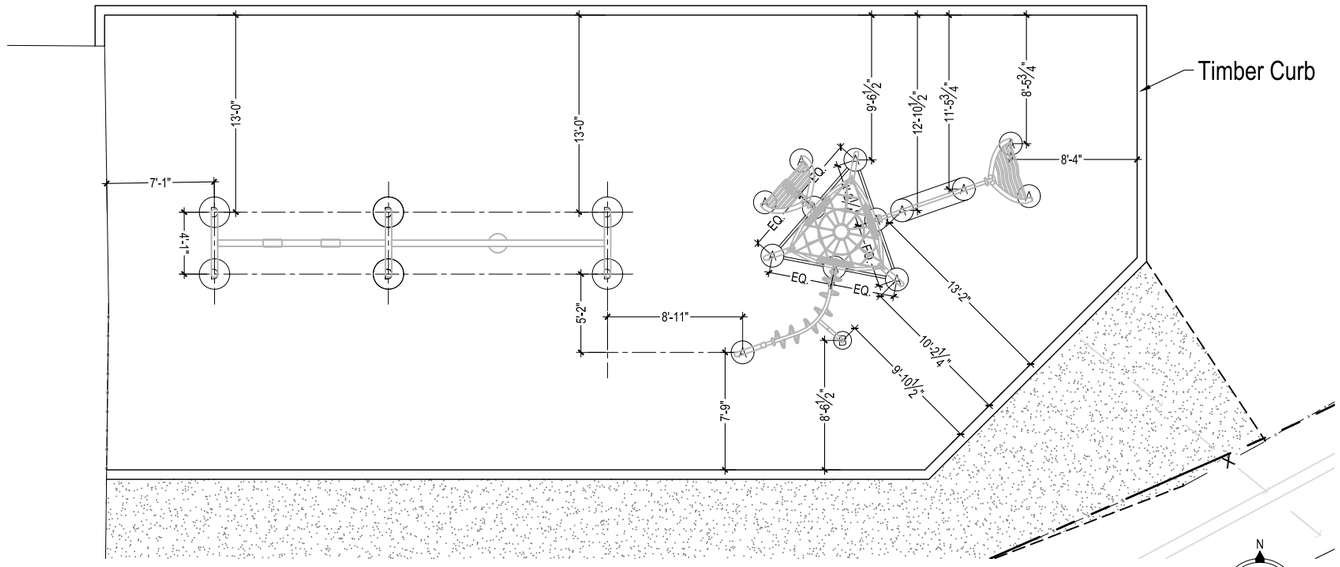


1 / L102 **Playground Footing Plan**

SCALE: 1" = 5'-0" @22x34

NOTE: Verify post/footing sizing and layout with equipment manufacturer.

| Safety Surface Tile Legend | |
|---|---|
| A | Blue |
| B | Red |
| C | Tan |
| D | Green |

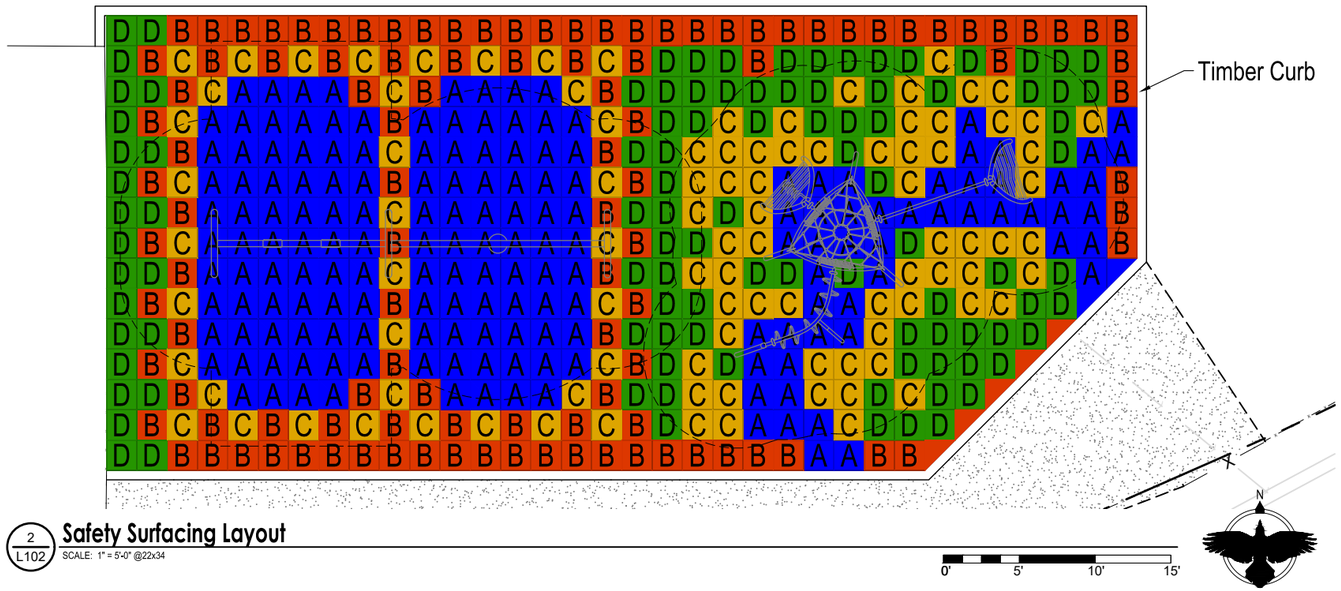


2 / L102 **Safety Surfacing Layout**

SCALE: 1" = 5'-0" @22x34

DESIGN BL
DRAWN BL
CHECK CM
APPROVED CM
FILE:

| No. | DATE | REVISION |
|---|---|---|

CITY AND BOROUGH OF JUNEAU
ALASKA'S CAPITAL CITY
ENGINEERING & PUBLIC WORKS DEPARTMENT


Corvus Design
Landscape Architecture
www.corvus-design.com
Juneau - 907.988.9000
119 Seward St. 99801
AECC #1195


STATE OF ALASKA 49TH
Christopher R. Mertl
12/12/2022
No. 10440
REGISTERED PROFESSIONAL LANDSCAPE ARCHITECT
Corporate License #1195

# EAGLES EDGE PARK IMPROVEMENTS

CBJ CONTRACT No. BE23-124
CITY & BOROUGH OF JUNEAU, ALASKA

PLAYGROUND FOOTING & SURFACING PLAN

DATE: December 12, 2022
RESPEC No. I0323.22004

SHEET
L102

J:\RSP-22-01 Eagles Edge Playground\2 - CAD\Corvus-Sheets.dwg PLOT: December 09, 2022 at: 5:05pm



Note: Image for contractor reference only. See Spec Section 32 33 00 for product information.

## 7 / L501 Covered Picnic Table

SCALE: NTS @22x34

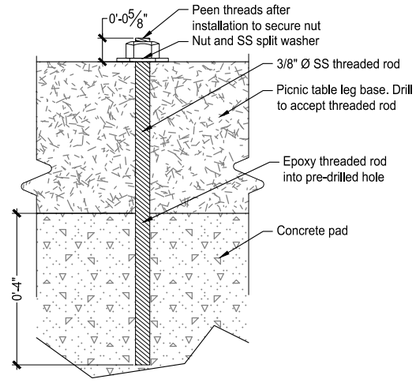


NOTE: Anchor at four contact points

## 8 / L501 Youth Picnic Table - Attachment

SCALE: 6" = 1'-0" @22x34

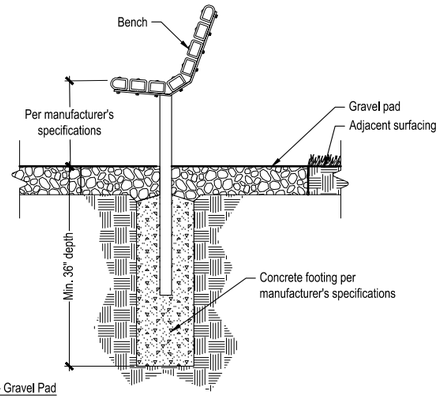


Side Section - Gravel Pad

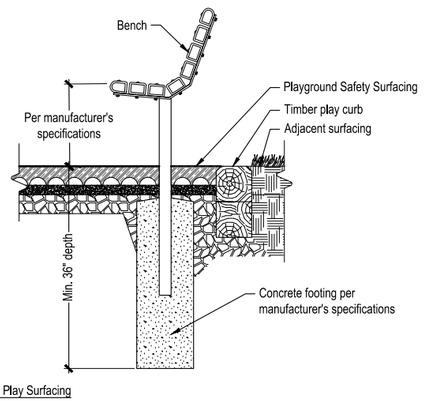


Side Section - Play Surfacing

## 9 / L501 Bench - Attachment

SCALE: 3/4" = 1'-0" @22x34

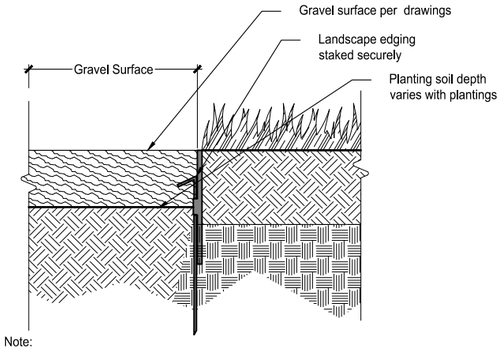


Note:
Install edging per manufacturer's specifications.

## 4 / L501 Edging

SCALE: NTS @22x34

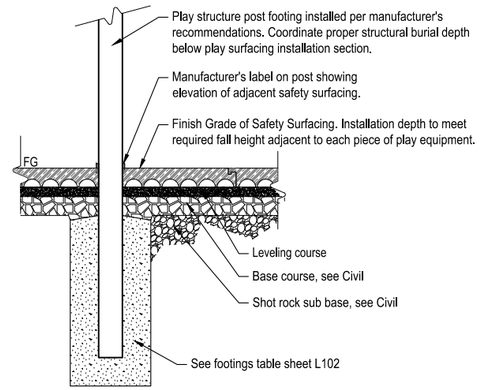


## 5 / L501 Safety Surfacing at Equipment Post

SCALE: NTS @22x34

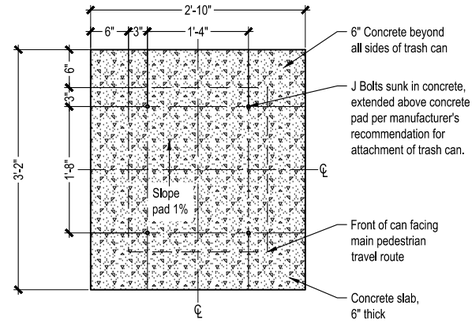


NOTE: Dimensions for pad and bolt spacing may vary to accommodate owner provided trash can, verify prior to install.

## 6 / L501 Litter Bin Concrete Pad

SCALE: 1" = 1'-0" @22x34

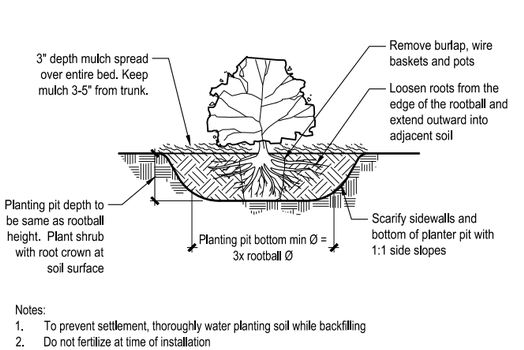


Notes:
1. To prevent settlement, thoroughly water planting soil while backfilling
2. Do not fertilize at time of installation
3. If present, remove all pots, twine, wire, and burlap from rootball

## 1 / L501 Shrub Planting

SCALE: NTS @22x34

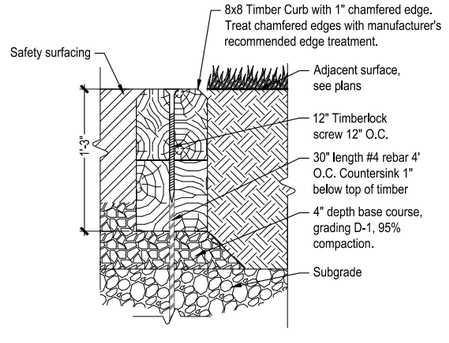


## 2 / L501 Timber Curb

SCALE: 1 1/2" = 1'-0" @22x34

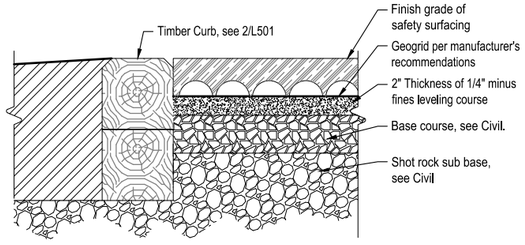


Notes:
1. Installed thickness of safety surfacing varies based on the fall height of the associated equipment. Contractor to verify fall heights and final thickness of safety tiles prior to installation. Install safety surfacing per manufacturer's directions.
2. No slope equal to or greater than 2%. See Civil for grades. Notify Engineer if grades exceed 2%.

## 3 / L501 Safety Surfacing

SCALE: 1 1/2" = 1'-0" @22x34


DESIGN BL
DRAWN BL
CHECK CM
APPROVED CM
FILE:

No. | DATE | REVISION

CITY AND BOROUGH OF JUNEAU
ALASKA'S CAPITAL CITY
ENGINEERING & PUBLIC WORKS DEPARTMENT

Corvus Design
Landscape Architecture
www.corvus-design.com
Juneau - 907.988.9000
119 Seward St. 99801
AECC #1195

STATE OF ALASKA 49TH
Christopher R. Merrill
12/12/2022
No. 10440
REGISTERED PROFESSIONAL LANDSCAPE ARCHITECT
Corporate License #1195


# EAGLES EDGE PARK IMPROVEMENTS

CBJ CONTRACT No. BE23-124
CITY & BOROUGH OF JUNEAU, ALASKA

DETAILS


DATE: December 12, 2022
RESPEC No. I0323.22004

SHEET L501


J:\RSP-22-01 Eagles Edge Playground\2 - CAD\Corvus-Sheets.dwg P.LOT: December 08, 2022 at: 5:05pm

# Sign layout, design, materials and installation to follow City and Borough of Juneau Park and Trails Signage Plan, May 2019.

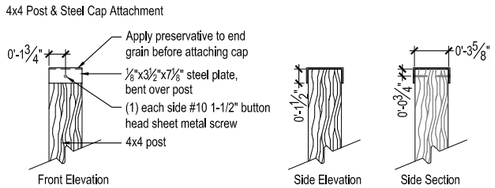


5 L502 **Steel Cap**
SCALE: 1 1/2" = 1'-0" @22x34

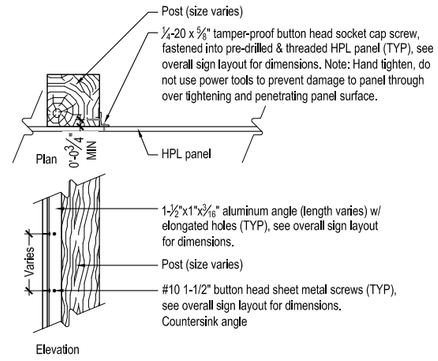


3 L502 **Angle Attachement**
SCALE: 1 1/2" = 1'-0" @22x34

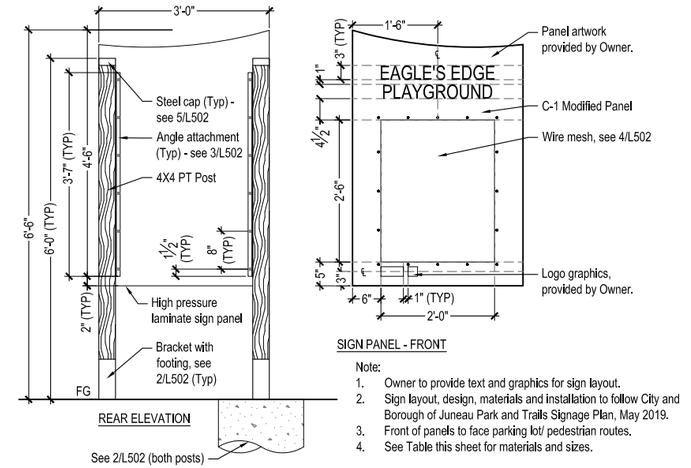


Note:
1. Owner to provide text and graphics for sign layout.
2. Sign layout, design, materials and installation to follow City and Borough of Juneau Park and Trails Signage Plan, May 2019.
3. Front of panels to face parking lot/ pedestrian routes.
4. See Table this sheet for materials and sizes.

1 L502 **Regulatory Sign**
SCALE: 3/4" = 1'-0" @22x34

| Regulatory SIGN SCHEDULE | | |
|---|---|---|
| **ITEM** | **DIMENSIONS** | **DESCRIPTION** |
| Sign Panel (C-1 Modified) | 36" x 54" | High Pressure Laminate with 24" x 30" cut out |
| Wire Mesh - Panel | 24" x 30" | 14 gauge SS square woven wire mesh with ¼" x ¼" opening |

Note: City and Borough of Juneau Parks and Trails Signage Plan, Summary Table of Materials and Sizing. All signs to meet the details, specifications and materials in the May 2019, CBJ Parks and Trails Signage Plan

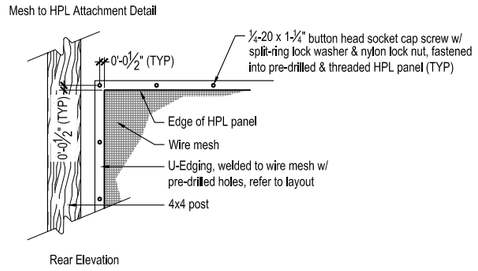


4 L502 **Wire Mesh**
SCALE: 1 1/2" = 1'-0" @22x34

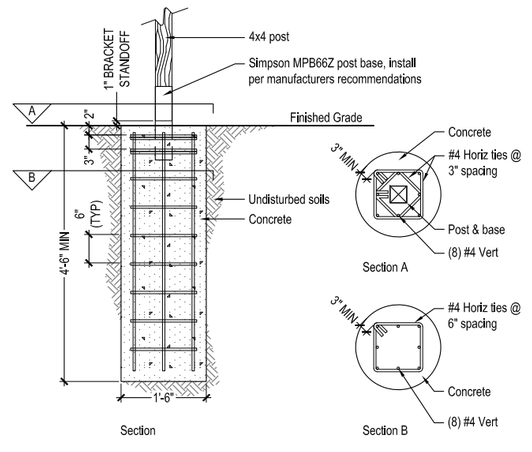


2 L502 **Sign Footing**
SCALE: 3/4" = 1'-0" @22x34

DESIGN BL
DRAWN BL
CHECK CM
APPROVED CM
FILE:

| No. | DATE | REVISION |
|---|---|---|

CITY AND BOROUGH OF JUNEAU
ALASKA'S CAPITAL CITY
ENGINEERING & PUBLIC WORKS DEPARTMENT


Corvus Design
Landscape Architecture
www.corvus-design.com
Juneau - 907.988.9000
119 Seward St, 99801
AECC #1195


STATE OF ALASKA 49TH
Christopher R. Merrill
12/12/2022
No. 10440
REGISTERED PROFESSIONAL LANDSCAPE ARCHITECT
Corporate License #1195

# EAGLES EDGE PARK IMPROVEMENTS

CBJ CONTRACT No. BE23-124
CITY & BOROUGH OF JUNEAU, ALASKA

SIGN DETAILS

DATE: December 12, 2022
RESPEC No. I0323.22004

SHEET L502

J:\RSP-22-01 Eagles Edge Playground\2 - CAD\Corvus-Sheets.dwg PLOT: December 08, 2022 at: 5:06pm