CITY & BOROUGH OF JUNEAU, ALASKA

AURORA HARBOR REBUILD - PHASE I

2013

CBJ CONTRACT NO. DH 12 - 160



LOCATION MAP

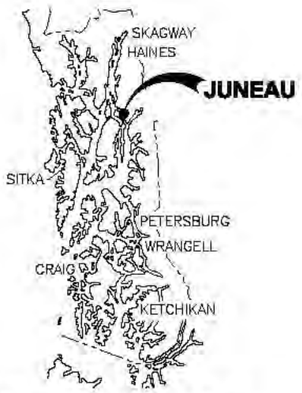

SOUTHEAST ALASKA

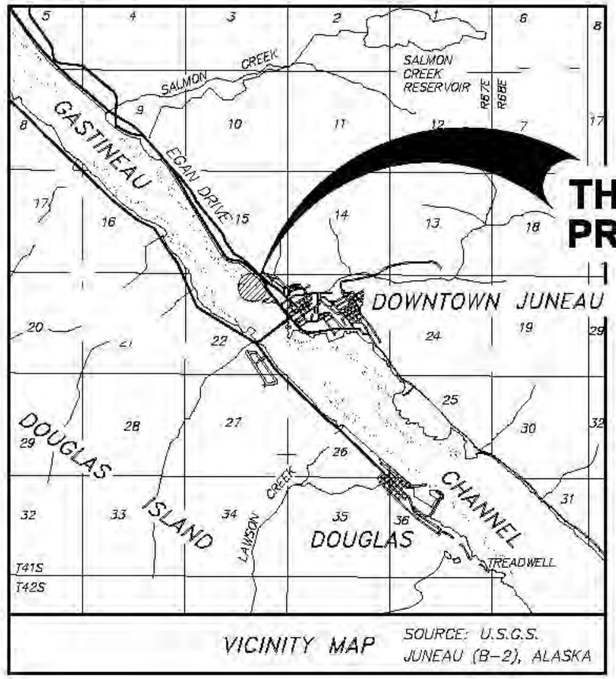

VICINITY MAP SOURCE: U.S.G.S. JUNEAU (B-2), ALASKA

PROJECT SCHEDULE	
DESCRIPTION	SCHEDULE
BEGIN NORTH APPROACH UTILITY WORK	AUGUST 1, 2014
COMPLETE NORTH APPROACH UTILITY WORK	SEPTEMBER 30, 2015
EARLIEST FIELD START ALL OTHER WORK	OCTOBER 1, 2014
SUBSTANTIAL COMPLETION	APRIL 30, 2015

NOTES:
1. ALL WORK REQUIRED TO MAINTAIN WATER AND ELECTRIC SERVICE TO FLOATS E THRU L SHALL BE COMPLETED PRIOR TO DECOMMISSIONING ANY ACTIVE WATER OR ELECTRIC SERVICE.
2. CONTRACTOR SHALL COORDINATE WITH OWNER AS REQUIRED TO ALLOW THE OWNER TO COMPLETE SALVAGE OF DESIGNATED UTILITY EQUIPMENT.
3. ADDITIONAL SCHEDULE PROVISIONS APPLY, SEE SPECIFICATIONS.

TIDAL DATA	ELEV. (FT)
HIGHEST OBSERVED WATER LEVEL	+24.58
MEAN HIGHER HIGH WATER (MHHW)	+16.30
MEAN HIGH WATER (MHW)	+15.34
MEAN SEA LEVEL (MSL)	+8.56
MEAN TIDE LEVEL (MTL)	+8.47
MEAN LOWER WATER (MLW)	+1.60
MEAN LOWER LOW WATER (MLLW)	0.0
LOWEST OBSERVED WATER LEVEL	−6.12

FROM:
NOAA NOS/CO-OPS STATION ID: 9452210 JUNEAU, ALASKA

PND ENGINEERS, INC. (PND) IS NOT RESPONSIBLE FOR SAFETY PROGRAMS, METHODS OR PROCEDURES OF OPERATION, OR THE CONSTRUCTION OF THE DESIGN SHOWN ON THESE DRAWINGS. DRAWINGS ARE FOR THE USE OF THIS PROJECT ONLY AND ARE NOT INTENDED FOR REUSE WITHOUT WRITTEN APPROVAL FROM PND. DRAWINGS ARE ALSO NOT TO BE USED IN ANY MANNER THAT WOULD CONSTITUTE A DETRIMENT DIRECTLY OR INDIRECTLY TO PND.

REVISIONS

REV.	DATE	DESCRIPTION	DWN.	CKD.	APP.

PND ENGINEERS, INC.
9360 Glacier Highway, Ste. 100
Juneau, Alaska 99801
Phone: 907-586-2093
Fax: 907-586-2099
www.pndengineers.com

DESIGN: MS CHECKED: JLD
DRAWN: WRB APPROVED: CRS
SCALE: AS SHOWN
DATE: 2/28/14

STATE OF ALASKA — John L. DeWalt — CE-8847 — REGISTERED PROFESSIONAL ENGINEER

CITY & BOROUGH OF JUNEAU, ALASKA
AURORA HARBOR REBUILD - PHASE I
CONTRACT NO. DH 12-160

SHEET TITLE: TITLE SHEET AND VICINITY MAP

PND PROJECT NO.: 122055

1.01
SHEET 1 OF 143

DRAWING INDEX

SHEET NO.	DWG. NO.	TITLE
		GENERAL
1 OF 143	1.01	TITLE SHEET AND VICINITY MAP
2 OF 143	1.02	DRAWING INDEX
3 OF 143	1.03	LEGEND, ABBREVIATIONS AND GENERAL NOTES
4 OF 143	1.04	EXISTING CONDITIONS OVERALL
5 OF 143	1.05	PHASE I EXISTING CONDITIONS AND DEMOLITION PLAN
6 OF 143	1.06	C FLOAT GANGWAY EXISTING CONDITIONS AND DEMOLITION PLAN
7 OF 143	1.07	SOUTH APPROACH DOCK EXISTING CONDITIONS & DEMOLITION PLAN
8 OF 143	1.08	SOUTH APPROACH DOCK DEMOLITION DETAILS
9 OF 143	1.09	DREDGE PLAN – ADD. ALT.
10 OF 143	1.10	SITE PLAN – OVERALL
11 OF 143	1.11	SITE PLAN – PHASE 1
12 OF 143	1.12	NORTH APPROACH DOCK DEMO AND IMPROVEMENT PLAN
13 OF 143	1.13	C FLOAT APPROACH DOCK UPLANDS IMPROVEMENT PLAN
14 OF 143	1.14	SOUTH APPROACH DOCK UPLANDS IMPROVEMENT PLAN
15 OF 143	1.15	UPLANDS DETAILS
		SOUTH APPROACH DOCK
16 OF 143	2.01	SOUTH APPROACH DOCK PLAN AND ELEVATION
17 OF 143	2.02	SOUTH APPROACH DOCK FRAMING PLAN AND SECTION
18 OF 143	2.03	SOUTH APPROACH DOCK PILE SCHEDULE AND DETAILS
19 OF 143	2.04	SOUTH APPROACH DOCK BATTER PILE WELDMENT DETAILS
20 OF 143	2.05	SOUTH APPROACH DOCK PILE CAP DETAILS
21 OF 143	2.06	SOUTH APPROACH DOCK STRINGER CONNECTION DETAILS
22 OF 143	2.07	SOUTH APPROACH DOCK GANGWAY CONNECTION DETAILS
23 OF 143	2.08	SOUTH APPROACH DOCK GANGWAY CONNECTION DETAILS
24 OF 143	2.09	SOUTH APPROACH DOCK BULLRAIL AND RAILING DETAILS
25 OF 143	2.10	SOUTH APPROACH DOCK BULLRAIL AND RAILING DETAILS
26 OF 143	2.11	GANGWAY GUARD DETAILS
27 OF 143	2.12	SOUTH APPROACH DOCK CONCRETE ABUTMENT SECTION
28 OF 143	2.13	SOUTH APPROACH DOCK CONCRETE ABUTMENT DETAILS
29 OF 143	2.14	SOUTH APPROACH DOCK MISCELLANEOUS DETAILS
		C FLOAT APPROACH DOCK
30 OF 143	3.01	C FLOAT APPROACH DOCK PLAN AND ELEVATION
31 OF 143	3.02	C FLOAT APPROACH DOCK FRAMING PLAN AND SECTION
32 OF 143	3.03	C FLOAT APPROACH DOCK PILE SCHEDULE & PILE CAP DETAILS
33 OF 143	3.04	C FLOAT APPROACH DOCK GANGWAY CONNECTION DETAILS
34 OF 143	3.05	C FLOAT APPROACH DOCK BULLRAIL AND CONCRETE DETAILS
		GANGWAY
35 OF 143	4.01	GANGWAY PLAN AND SECTION
36 OF 143	4.02	GANGWAY TYPICAL SECTION AND DETAILS
37 OF 143	4.03	GANGWAY DETAILS
38 OF 143	4.04	GANGWAY DETAILS
		HARBOR LAYOUT
39 OF 143	5.01	OVERALL FLOAT PLAN AND PILE LAYOUT
40 OF 143	5.02	FLOAT PILE SCHEDULE
41 OF 143	5.03	FLOAT PILE DETAILS
42 OF 143	5.04	HEADWALK FLOAT PLAN
43 OF 143	5.05	HEADWALK FLOAT PLAN
44 OF 143	5.06	MAINWALK FLOAT PLAN A FLOAT AND B FLOAT
45 OF 143	5.07	MAINWALK FLOAT PLAN C FLOAT AND D FLOAT
46 OF 143	5.08	FLOTATION SCHEDULES
47 OF 143	5.09	FLOTATION SCHEDULES

DRAWING INDEX

SHEET NO.	DWG. NO.	TITLE
		MOORAGE FLOATS
48 OF 143	6.01	HEADWALK FLOAT UNIT H–1
49 OF 143	6.02	HEADWALK FLOAT UNIT H–2
50 OF 143	6.03	HEADWALK FLOAT UNIT H–3
51 OF 143	6.04	HEADWALK FLOAT UNIT H–4
52 OF 143	6.05	HEADWALK FLOAT UNIT H–5
53 OF 143	6.06	HEADWALK FLOAT UNIT H–6
54 OF 143	6.07	HEADWALK FLOAT UNIT H–7
55 OF 143	6.08	HEADWALK FLOAT UNIT H–8
56 OF 143	6.09	HEADWALK FLOAT UNIT H–9
57 OF 143	6.10	HEADWALK FLOAT UNIT H–10
58 OF 143	6.11	HEADWALK FLOAT UNIT H–11
59 OF 143	6.12	HEADWALK FLOAT UNIT H–12
60 OF 143	6.13	HEADWALK FLOAT UNIT H–13
61 OF 143	6.14	HEADWALK FLOAT UNIT H–14
62 OF 143	6.15	HEADWALK FLOAT UNIT H–15
63 OF 143	6.16	HEADWALK FLOAT UNIT H–16
64 OF 143	6.17	HEADWALK FLOAT UNIT H–17
65 OF 143	6.18	MAINWALK A FLOAT UNIT A–1
66 OF 143	6.19	MAINWALK A FLOAT UNIT A–2
67 OF 143	6.20	MAINWALK A FLOAT UNIT A–3
68 OF 143	6.21	MAINWALK A FLOAT UNIT A–4
69 OF 143	6.22	MAINWALK A FLOAT UNIT A–5
70 OF 143	6.23	MAINWALK B FLOAT UNIT B–1
71 OF 143	6.24	MAINWALK B FLOAT UNIT B–2
72 OF 143	6.25	MAINWALK B FLOAT UNIT B–3
73 OF 143	6.26	MAINWALK B FLOAT UNIT B–4
74 OF 143	6.27	MAINWALK B FLOAT UNIT B–5
75 OF 143	6.28	MAINWALK B FLOAT UNIT B–6
76 OF 143	6.29	MAINWALK C FLOAT UNIT C–1
77 OF 143	6.30	MAINWALK C FLOAT UNIT C–2
78 OF 143	6.31	MAINWALK C FLOAT UNIT C–3
79 OF 143	6.32	MAINWALK C FLOAT UNIT C–4
80 OF 143	6.33	MAINWALK C FLOAT UNIT C–5
81 OF 143	6.34	MAINWALK C FLOAT UNIT C–6
82 OF 143	6.35	MAINWALK D FLOAT UNIT D–1
83 OF 143	6.36	MAINWALK D FLOAT UNIT D–2
84 OF 143	6.37	MAINWALK D FLOAT UNIT D–3
85 OF 143	6.38	MAINWALK D FLOAT UNIT D–4
86 OF 143	6.39	MAINWALK D FLOAT UNIT D–5
87 OF 143	6.40	MAINWALK D FLOAT UNIT D–6
88 OF 143	6.41	4'x32' FINGER FLOAT UNIT
89 OF 143	6.42	5'x42' FINGER FLOAT UNIT
90 OF 143	6.43	5'x48' FINGER FLOAT UNIT
91 OF 143	6.44	8'x60' FINGER FLOAT UNIT
92 OF 143	6.45	8'x62' FINGER FLOAT UNIT
93 OF 143	6.46	8'x85' FINGER FLOAT UNIT
94 OF 143	6.47	8'x85' FINGER FLOAT UNIT
95 OF 143	6.48	10'x110' FINGER FLOAT UNIT
96 OF 143	6.49	10'x110' FINGER FLOAT UNIT
97 OF 143	6.50	GANGWAY FLOAT UNIT G–1
98 OF 143	6.51	GANGWAY FLOAT UNIT G–2
99 OF 143	6.52	C FLOAT GANGWAY LANDING FLOAT
100 OF 143	6.53	SUBSTATION FLOAT UNIT

DRAWING INDEX

SHEET NO.	DWG. NO.	TITLE
		MOORAGE FLOATS DETAILS
101 OF 143	7.01	ANGLED TRANSITION MODULE A PLAN AND DETAILS
102 OF 143	7.02	ANGLED TRANSITION MODULE B PLAN AND DETAILS
103 OF 143	7.03	ANGLED TRANSITION MODULE C PLAN AND DETAILS
104 OF 143	7.04	ANGLED TRANSITION MODULE SECTION AND DETAILS
105 OF 143	7.05	FLOAT UNIT SECTIONS
106 OF 143	7.06	FLOAT UNIT SECTIONS
107 OF 143	7.07	SHEAR BLOCK CONNECTION DETAILS
108 OF 143	7.08	SHEAR BLOCK CONNECTION DETAILS
109 OF 143	7.09	MISCELLANEOUS CONNECTION DETAILS
110 OF 143	7.10	PIANO HINGE DETAILS
111 OF 143	7.11	PIANO HINGE DETAILS
112 OF 143	7.12	PIANO HINGE DETAILS
113 OF 143	7.13	DIAPHRAGM DETAILS
114 OF 143	7.14	DIAPHRAGM DETAILS
115 OF 143	7.15	ANGLE PLATE DETAILS
116 OF 143	7.16	MISCELLANEOUS FLOAT UNIT DETAILS
117 OF 143	7.17	BALLAST TANK AND FLOTATION BILLET DETAILS
118 OF 143	7.18	TRANSITION RAMP PLAN
119 OF 143	7.19	TRANSITION RAMP ELEVATION
120 OF 143	7.20	TRANSITION RAMP DETAILS
121 OF 143	7.21	EXTERNAL PILE HOOP DETAILS
122 OF 143	7.22	INTERNAL PILE MODULE DETAILS
123 OF 143	7.23	INTERNAL PILE MODULE DETAILS
124 OF 143	7.24	ELECTRICAL EQUIPMENT SUPPORT DETAILS
125 OF 143	7.25	ELECTRICAL EQUIPMENT SUPPORT DETAILS
126 OF 143	7.26	ELECTRICAL EQUIPMENT SUPPORT DETAILS
127 OF 143	7.27	SAFETY EQUIPMENT SUPPORT DETAILS
128 OF 143	7.28	SIGNAGE
		UTILITY LAYOUT
129 OF 143	8.01	NORTH APPROACH DOCK WATERLINE PLAN AND PROFILE
130 OF 143	8.02	UTILITY SYSTEM SOUTH GENERAL SITE PLAN
131 OF 143	8.03	SOUTH APPRDACH DOCK UTILITIES PLAN AND PROFILE
132 OF 143	8.04	UTILITY SYSTEMS UPLAND DETAILS
133 OF 143	8.05	UTILITY ROUTING DETAILS
134 OF 143	8.06	UTILITY DETAILS
135 OF 143	8.07	UTILITY DETAILS
136 OF 143	8.08	C FLOAT APPROACH DOCK WATER SERVICE DETAILS
137 OF 143	8.09	WASTEWATER SYSTEM DETAILS
138 OF 143	8.10	UTILITY DETAILS
		STRUCTURAL
139 OF 143	9.01	UTILITY BUILDING PLAN AND ELEVATION
140 OF 143	9.02	UTILITY BUILDING DETAILS
		EXISTING C - GANGWAY LANDING FLOAT REFERENCE DRAWINGS
141 OF 143	10.01	C – GANGWAY LANDING FLOAT DETAILS
142 OF 143	10.02	C – GANGWAY LANDING FLOAT DETAILS
143 OF 143	10.03	C – GANGWAY LANDING FLOAT DETAILS

ELECTRICAL DRAWING INDEX

SHEET NO.	DWG. NO.	TITLE
1 OF 28	E1.00	OVERALL SITE PLAN
2 OF 28	E1.01	SITE PLAN – SOUTH APPROACH DOCK EXISTING
3 OF 28	E1.02	SITE PLAN – FLOAT A EXISTING
4 OF 28	E1.03	SITE PLAN – FLOAT B EXISTING
5 OF 28	E1.04	SITE PLAN – FLOAT C EXISTING
6 OF 28	E1.05	SITE PLAN – FLOAT D EXISTING
7 OF 28	E1.06	EXISTING SINGLE LINE DIAGRAMS
8 OF 28	E1.07	EXISTING SINGLE LINE DIAGRAMS
9 OF 28	E1.08	EXISTING SINGLE LINE DIAGRAMS
10 OF 28	E1.09	EXISTING LIGHTING
11 OF 28	E2.01	SITE PLAN – SOUTH APPROACH DOCK NEW
12 OF 28	E2.02	SITE PLAN – FLOAT A NEW
13 OF 28	E2.03	SITE PLAN – FLOAT B NEW
14 OF 28	E2.04	SITE PLAN – FLOAT C NEW
15 OF 28	E2.05	SITE PLAN – FLOAT D NEW
16 OF 28	E2.06	NEW SINGLE LINE DIAGRAMS
17 OF 28	E2.07	NEW SINGLE LINE DIAGRAMS
18 OF 28	E2.08	ELECTRICAL DETAILS
19 OF 28	E2.09	ELECTRICAL DETAILS
20 OF 28	E2.10	FLOAT DETAILS
21 OF 28	E2.11	APPROACH DOCK DETAILS
22 OF 28	E2.12	FLOAT C GANGWAY DETAILS
23 OF 28	E2.13	SOUTH APPROACH GANGWAY DETAILS
24 OF 28	E2.14	NORTH GANGWAY DETAILS
25 OF 28	E2.15	WIRING DIAGRAMS
26 OF 28	E2.15	WIRING DIAGRAMS & ELEVATION
27 OF 28	E3.01	NEW LIGHTING
28 OF 28	E3.02	NEW LIGHTING

REVISIONS

REV.	DATE	DESCRIPTION	DWN.	CK'D.	APP.

PND ENGINEERS, INC.
9360 Glacier Highway, Ste. 100
Juneau, Alaska 99801
Phone: 907-586-2093
Fax: 907-586-2099
www.pndengineers.com

DESIGN: MS CHECKED: JLD
DRAWN: WRB APPROVED: CRS
SCALE: NTS
DATE: 2/28/14

STATE OF ALASKA — JOHN L. DARNELL — CE-6847 — REGISTERED PROFESSIONAL ENGINEER

CITY & BOROUGH OF JUNEAU, ALASKA
AURORA HARBOR REBUILD - PHASE I
CONTRACT NO. DH 12-160

SHEET TITLE: **DRAWING INDEX**

PND PROJECT NO.: 122055

1.02
SHEET 2 OF 143

ABBREVIATIONS

A	
AC	ASBESTOS CEMENT
ACP	ASPHALT CONCRETE PAVEMENT
ADJ	ADJUSTABLE
APPROX	APPROXIMATE
APX	APPROXIMATE
ASSY	ASSEMBLY
AV	AIR RELEASE VALVE
B	
BFV	BUTTERFLY VALVE
BOP	BEGINNING OF PROJECT
BRG	BEARING
BTM	BOTTOM
C	
C&G	CURB & GUTTER
CB	CATCH BASIN
CI	CAST IRON
CIP	CAST-IN-PLACE
CJ	CONTROL JOINT
CL	CENTER LINE
CLR	CLEAR
CMP	CORRUGATED METAL PIPE
CO	CLEANOUT
CONC	CONCRETE
CONN	CONNECTION
CONSTR	CONSTRUCTION
CP	CONTROL PANEL
CPSS	CITY OF PETERSBURG STANDARD SPECIFICATIONS
CPSD	CITY OF PETERSBURG STANDARD DETAILS
CTR	CENTER
CY	CUBIC YARD
D	
D/DIA	DIAMETER
DL	DEAD LOAD
DIP	DUCTILE IRON PIPE
DIM	DIMENSION
DN	DOWN
DTL	DETAIL
E	
(E)	EXISTING
E	EAST
EA	EACH
EF	ELECTRO-FUSION
EG	EXISTING GRADE
EJ	EXPANSION JOINT
EJIW	EAST JORDAN IRON WORKS
ELEC	ELECTRICAL
EL/ELEV	ELEVATION
EOP	END OF PROJECT
EPS	EXPANDED POLYSTYRENE
EQ	EQUAL
EQUIP	EQUIPMENT
EST	ESTIMATE
EXC	EXCAVATE
EXIST	EXISTING
F	
F&I	FINISHED AND INSTALLED
FC	FRONT FACE OF CURB
FD	FLOOR DRAIN
FDC	FIRE DEPT. CONNECTION
FG	FINISHED GRADE
FF	FINISHED FLOOR
FIN	FINISH (ED)
FL	FLOWLINE / FLANGE(D)
FM	FORCE MAIN SEWER
FND	FOUNDATION
FT	FOOT
FTG	FOOTING
G	
GAL	GALLON
GALV	GALVANIZED
GB	GRADE BREAK
GPM	GALLONS PER MINUTE
GR	GRADE
GRD	GROUND
GV	GATE VALVE
H	
H&T	HUB & TACK
HC	HAND-CAP
HD	HEAVY DUTY
HDG	HOT DIP GALVANIZED
HDPE	HIGH DENSITY POLYETHYLENE
HSE	HOUSE
HT	HEIGHT
HWY	HIGHWAY
I	
IAW	IN ACCORDANCE WITH
ID	INSIDE DIAMETER
IE	INVERT ELEVATION
IN	INCH
INCL	INCLUDE (D) (ING)
INSUL	INSULATE (D) (ION)
INV	INVERT
L	
LBS	POUNDS
LF	LINEAR FEET
LL	LIVE LOAD
LOC	LOCATION
LS	LUMP SUM
M	
MAX	MAXIMUM
MECH	MECHANICAL
MFR	MANUFACTURE (R)
MH	MANHOLE
MIN	MINIMUM
MJ	MECHANICAL JOINT
MSF	1000 SQUARE FEET
MTL	MATERIAL (S)
N	
N	NORTH
NFS	NON FROST SUSCEPTIBLE
NIC	NOT IN CONTRACT
NO	NUMBER
NRS	NON-RISING STEM
NTS	NOT TO SCALE
O	
OBD	OVERBURDEN
OC	ON CENTER
OD	OUTSIDE DIAMETER
OG	ORIGINAL GROUND
OHE	OVERHEAD ELECTRICAL
OPP	OPPOSITE
OWS	OIL WATER SEPARATOR
P	
PCC	PRECAST CONCRETE
PE	POLYETHYLENE
PED	PEDESTAL
PER	PERIMETER
PERF	PERFORATE (D)
PI	POINT OF INTERSECTION
PL	PROPERTY LINE
PL	PLATE
PP	POLYPROPYLENE
PROJ	PROJECT (ION)
PRV	PRESSURE REDUCING VALVE
PSI	POUNDS PER SQUARE INCH
PT	POINT, PRESSURE TREATED
PVC	POINT OF VERTICAL CURVATURE
PVC	POLYVINYL CHLORIDE
PVMT	PAVEMENT
PVT	POINT OF VERTICAL TANGENCY
Q	
QTY	QUANTITY
R	
RAD	RADIUS
RE	RIM ELEVATION
REF	REFERENCE
REQD	REQUIRED
RET	RETAINING
RO	ROUGH OPENING
R/W	RIGHT OF WAY
S	
S	SOUTH
SD	STORM DRAIN
SDCB	STORM DRAIN CATCH BASIN
SDMH	STORM DRAIN MANHOLE
SDR	STANDARD DIMENSION RATIO
SF	SQUARE FOOT
SI	STREET INTERSECTION
SIM	SIMILAR
SPEC	SPECIFICATION (S)
SQ	SQUARE
SS	SANITARY SEWER
SSC	SANITARY SEWER CONNECTION
SSMH	SANITARY SEWER MANHOLE
SS	STAINLESS STEEL
SST	STAINLESS STEEL
SSX	SANITARY SEWER CROSSING
STA	STATION
STD	STANDARD
STL	STEEL
SW	SIDEWALK
SWR	SEWER
SY	SQUARE YARD
SYM	SYMMETRICAL
T	
t	THICK
TBC	TOP BACK OF CURB
TBM	TEMPORARY BENCH MARK
TD	TRENCH DRAIN
TEL	TELEPHONE
TH	TEST HOLE
TV	TELEVISION
TYP	TYPICAL
U	
UBC	UNIFORM BUILDING CODE
UMC	UNIFORM MECHANICAL CODE
UNO	UNLESS NOTED OTHERWISE
UPC	UNIFORM PLUMBING CODE
USACE	US ARMY CORPS OF ENGINEERS
V	
VB	VALVE BOX
VERT	VERTICAL
W	
W	WEST
W/	WITH
W/I	WITHIN
WD	WOOD
WL	WATERLINE
W/O	WITHOUT
X	
XFRMR	TRANSFORMER
<PT	ANGLE POINT

LEGEND

EXISTING	PROPOSED	
		GRADE BREAK
	E	ELECTRIC LINE
	FW	FIRE LINE
		EASEMENT LINE
		PROPERTY LINE
		EDGE ACP OR GRAVEL ROADWAY
X X X	X	FENCE
CU	CU	UNDERGROUND COMMUNICATION LINE
EU	EU	UNDERGROUND ELECTRIC LINE
F		FUEL LINE
SS	SS	UNDERGROUND SANITARY SEWER LINE
FM	SS	UNDERGROUND SANITARY SEWER FORCE MAIN
SD		UNDERGROUND STORM DRAIN LINE
W	W	WATER LINE
EO		OVERHEAD ELECTRIC LINE
		TREE
		ELECTRIC PEDESTAL
		TELEPHONE PEDESTAL
		GUY ANCHOR
GP		GUY POLE
PP		POWER POLE
		UTILITY POLE
		MONUMENT OR SURVEY MARK

EXISTING	PROPOSED	
		ELECTRIC TRANSFORMER
		FIRE HYDRANT
		SIGNS
		STORM DRAIN MANHOLE
		TIMBER PILE
		LIGHT POLE
		SANITARY SEWER MANHOLE
CO		SANITARY SEWER CLEANOUT
		KEY BOX/WATER VALVE
		STORM DRAIN CATCH BASIN MANHOLE
		CULVERT OR DRAIN PIPE

A / 1.02 — SECTION OR DETAIL CALLOUT; LOCATION OF DETAIL OR REFERENCE DRAWING

GENERAL NOTES

1. PROPERTY DISTURBED DURING CONSTRUCTION SHALL BE RESTORED TO ITS PRECONSTRUCTION CONDITION OR BETTER AT NO ADDITIONAL COST.
2. CBJ ENGINEERING STANDARD DETAILS BOOK DATED AUGUST, 2011 IS MADE A PART OF THIS CONTRACT, WITH CURRENT REVISIONS AS APPLICABLE. STANDARD DETAILS SHALL ONLY BE UTILIZED AS SPECIFICALLY REFERENCED IN THE DRAWINGS WITH MODIFICATIONS SPECIFIED.
3. THE CONTRACTOR SHALL BE RESPONSIBLE FOR ADHERING TO ALL APPLICABLE, LOCAL, STATE AND FEDERAL CODES, PERMITS AND SAFETY REQUIREMENTS.
4. THE LOCATIONS OF EXISTING FEATURES AND UTILITIES SHOWN ON THE DRAWINGS ARE APPROXIMATE. ADDITIONAL UTILITIES NOT SHOWN IN THESE DRAWINGS MAY BE PRESENT. THE CONTRACTOR SHALL VERIFY ALL UTILITY LOCATIONS IN THE FIELD AS NECESSARY, PRIOR TO BEGINNING WORK. THE HORIZONTAL AND VERTICAL LOCATIONS OF ALL UTILITIES ENCOUNTERED IN THE FIELD SHALL BE RECORDED ON THE CONTRACTOR'S RECORD DRAWINGS. CONTACT LOCAL UTILITY COMPANIES PRIOR TO ANY/ ALL EXCAVATIONS AT THE FOLLOWING TELEPHONE NUMBERS:

DIAL BEFORE YOU DIG!
586-1333
UNDERGROUND POWER, TELEPHONE, T.V., COMMUNICATIONS, WATER AND WASTEWATER LINES ARE IN THE AREA. UTILITIES SHOWN HERE DO NOT SUBSTITUTE FOR FIELD LOCATES.

5. GRADING AND FINAL ALIGNMENT OF UTILITIES & PIPING ARE SUBJECT TO MINOR REVISIONS BY THE ENGINEER TO FIT SITE CONDITIONS, AT NO ADDITIONAL COST.
6. CONTRACTOR SHALL COORDINATE WITH ALL AFFECTED BOROUGH DEPARTMENTS AND LOCAL UTILITY COMPANIES DURING CONSTRUCTION.
7. THE CONTRACTOR SHALL NOT DISRUPT UTILITY SERVICES AT THE NORTH END OF THE HARBOR EXCEPT AS REQUIRED TO COMPLETE THE RECONFIGURATION OF THOSE SERVICES AS SHOWN IN THE PLANS. COORDINATE ANY DISTRUPTIONS WITH OWNER A MINIMUM OF 48 HOURS IN ADVANCE.

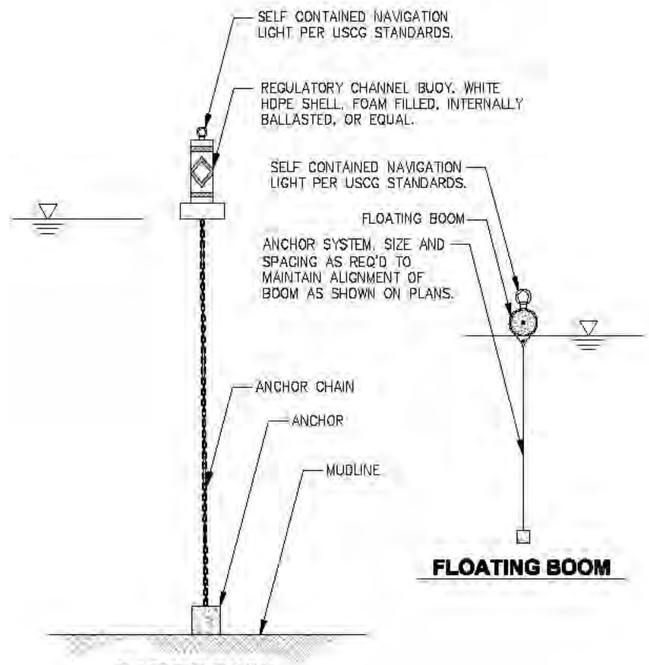

FLOATING BOOM

MARKER BUOY

NOTES: 1. GENERAL REQUIREMENTS SHOWN. FINAL DESIGN REQUIREMENTS BY CONTRACTOR. SEE SPECIFICATIONS FOR FINAL REQUIREMENTS.

REVISIONS

REV.	DATE	DESCRIPTION	DWN.	CKD.	APP.

PND ENGINEERS, INC.
9360 Glacier Highway, Ste. 100
Juneau, Alaska 99801
Phone: 907-586-2093
Fax: 907-586-2099
www.pndengineers.com

DESIGN: MS CHECKED: JLD
DRAWN: WRB APPROVED: CRS
SCALE: AS SHOWN
DATE: 2/28/14

STATE OF ALASKA — John L. DeMuth — CE-8847 — REGISTERED PROFESSIONAL ENGINEER

CITY & BOROUGH OF JUNEAU, ALASKA
AURORA HARBOR REBUILD - PHASE I
CONTRACT NO. DH 12-160

SHEET TITLE: **LEGEND, ABBREVIATIONS AND GENERAL NOTES**

PND PROJECT NO.: 122055

1.03
SHEET 3 OF 143

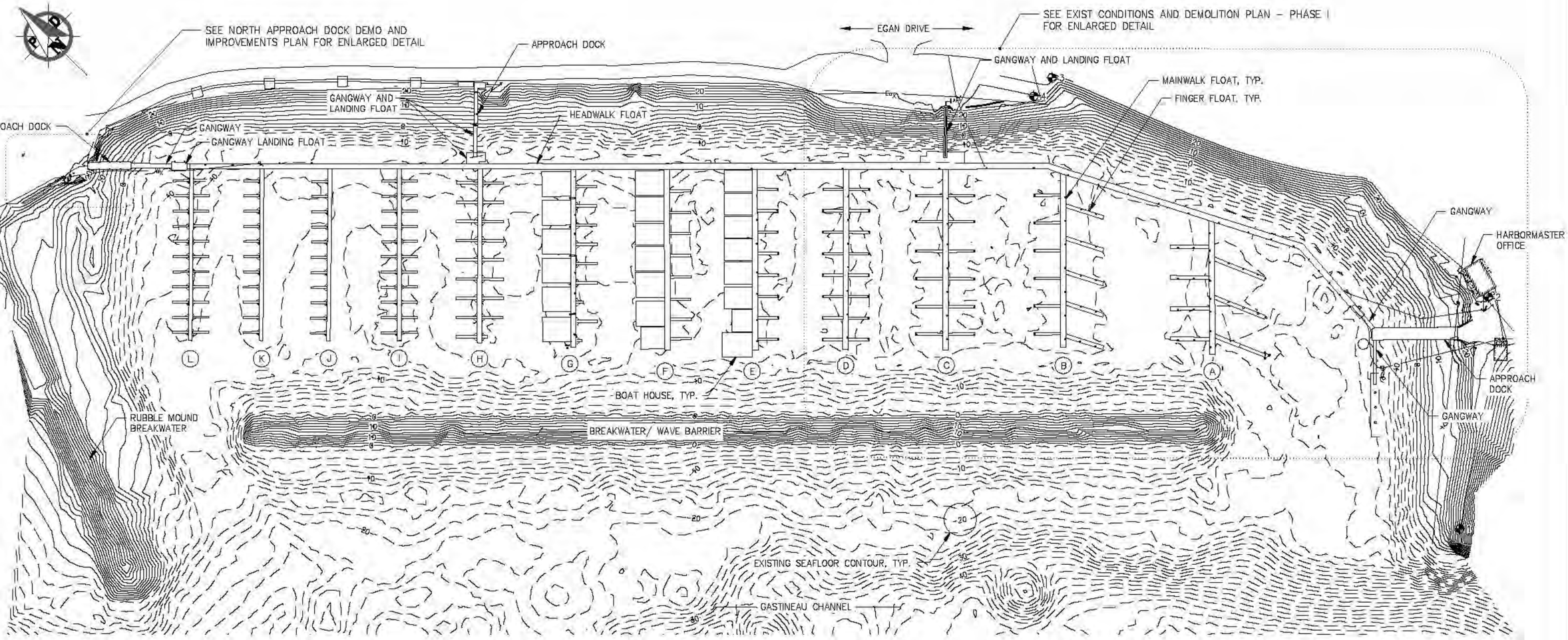

SURVEY NOTES:

1. EXISTING CONDITIONS ARE BASED UPON FIELD SURVEYS BY PND, UTILITY LOCATES, AND AS-BUILTS PROVIDED BY THE UNITED STATES ARMY CORPS OF ENGINEERS (USACE) AND THE CITY AND BOROUGH OF JUNEAU (CBJ). FIELD VERIFY ALL EXISTING CONDITIONS.
2. HORIZONTAL CONTROL IS IN US SURVEY FEET AND BASED ON THE MONUMENTS AND SURVEY POINTS DESCRIBED IN THE SURVEY CONTROL TABLE. COORDINATE SYSTEM IS LOCAL.
3. VERTICAL CONTROL IS MEAN LOWER LOW WATER (MLLW = 0.0') AND WAS DERIVED FROM A FOUND MONUMENT, JA-1 WITH AN ELEVATION OF 24.22 MLLW AS PER USACE AURORA HARBOR PROJECT CONDITION SURVEY, DATED MAY 7-8, 2013. SURVEY NO. 3142-13.
4. ALL EXISTING UTILITIES ARE SHOWN FROM SURVEYED INFORMATION, SURVEYED UTILITY LOCATES, AS-BUILT RECORDS PROVIDED BY USACE, AND CBJ. FIELD VERIFY ALL UTILITIES.

SURVEY CONTROL

POINT NO.	NORTHING	EASTING	ELEVATION	DESCRIPTION
1	2363831.81	2538658.22	24.22	JA-1 RESET 1989 USACE SBC
2	2364058.41	2538951.74	24.53	AH-F 2002 3 1/4" DOMED BC
3	2364795.21	2538712.52	25.13	REBAR WITH CAP
4	2364795.43	2538671.51	24.18	MAGNAIL IN ACP

REVISIONS

REV.	DATE	DESCRIPTION	DWN.	CKD.	APP.

PND ENGINEERS, INC.
9360 Glacier Highway, Ste. 100
Juneau, Alaska 99801
Phone: 907-586-2093
Fax: 907-586-2099
www.pndengineers.com

DESIGN: MS CHECKED: JLD
DRAWN: WRB APPROVED: CRS
SCALE: SCALE IN FEET 0 80 160 FT
DATE: 2/28/14

STATE OF ALASKA – JOHN L. DAHLIA – CE-8847 – REGISTERED PROFESSIONAL CIVIL ENGINEER

CITY & BOROUGH OF JUNEAU, ALASKA
AURORA HARBOR REBUILD - PHASE I
CONTRACT NO. DH 12-160

SHEET TITLE:
EXISTING CONDITIONS OVERALL

PND PROJECT NO.: 122055

1.04
SHEET 4 OF 143

GENERAL NOTES:

1. PILE LOCATIONS SHOWN ARE APPROXIMATE.
2. EXISTING HEADWALK, MAINWALKS, FINGER FLOATS AND TIMBER PILES ARE CONSTRUCTED w/TREATED TIMBERS. CONTRACTOR SHALL DISPOSE IN ACCORDANCE w/ALL REGULATORY REQUIREMENTS.
3. SCHEDULE AND COORDINATION PROVISIONS APPLY TO THIS WORK, SEE SECTIONS 01010 SUMMARY OF WORK AND 02060 DEMOLITION AND DISPOSAL.

LEGEND:

- DEMOLITION LIMITS
- STEEL PILE
- TIMBER PILE
- (A) FLOAT DESIGNATION

DEMOLITION AND SALVAGE SUMMARY

1. PRIOR TO FLOAT DEMOLITION BY THE CONTRACTOR, COORDINATE AS REQUIRED TO ACCOMMODATE THE OWNER'S EQUIPMENT SALVAGE OPERATIONS. THE OWNER SHALL SALVAGE THE FOLLOWING ITEMS FROM WITHIN THE DEMOLITION LIMIT:
   - 1.1. (12) WATER PEDESTALS
   - 1.2. (12) ELECTRICAL PEDESTALS
   - 1.3. ALL FISH CLEANING TABLES
   - 1.4. WASTEWATER PUMP AT C FLOAT GANGWAY LANDING FLOAT AND ADJACENT INSULATED PIPING.
2. DEMOLISH AND DISPOSE OF TIMBER HEADWALK FLOAT, TIMBER MAINWALK FLOAT A, TIMBER MAINWALK FLOAT B, TIMBER MAINWALK FLOAT C, TIMBER MAINWALK FLOAT D, ALL TIMBER FINGER FLOATS, ALL TIMBER AND STEEL PILES, WATER LINES AND ANY MISCELLANEOUS ASSOCIATED FLOAT MOUNTED APPURTENANCES.
3. DEMOLISH AND DISPOSE OF STEEL PILE DOLPHIN AT END OF MAINWALK FLOAT A.
4. REMOVE AND SALVAGE C FLOAT GANGWAY AND EXISTING C FLOAT GANGWAY LANDING FLOAT.
5. DEMOLISH AND DISPOSE OF EXISTING FLOATING FIRE SHED AT C FLOAT.
6. DEMOLISH AND DISPOSE OF SOUTH APPROACH DOCK AND EXISTING 6'x50' STEEL GANGWAY LEADING TO HEADWALK FLOAT.
7. REMOVE AND SALVAGE 5'x70' ALUMINUM GANGWAY TO MOORING FLOAT.
8. CUT HEADWALK FLOAT BETWEEN FLOTATION BILLETS. SUBMIT LOCATION TO ENGINEER FOR APPROVAL, ENSURE REQUIRED UTILITY WORK IS COMPLETE AND DISCONNECT UTILITIES PRIOR TO CUTTING.
9. SALVAGE AND PROVIDE TO OWNER ALL POWER CENTERS WITHIN THE DEMO LIMIT, SEE ELEC.
   - 9.1. SEE ELECTRICAL FOR ADDITIONAL DEMOLITION SUMMARY/ SCOPE REQUIRED.
10. DEMO AND DISPOSE ALL WATER, WASTEWATER AND FIRE SUPPRESSION SYSTEMS PIPE AND APPURTENANCES, UNO. SEE UTILITIES SECTION FOR WORK REQUIRED TO OCCUR PRIOR TO WATER SYSTEM DEMOLITION.

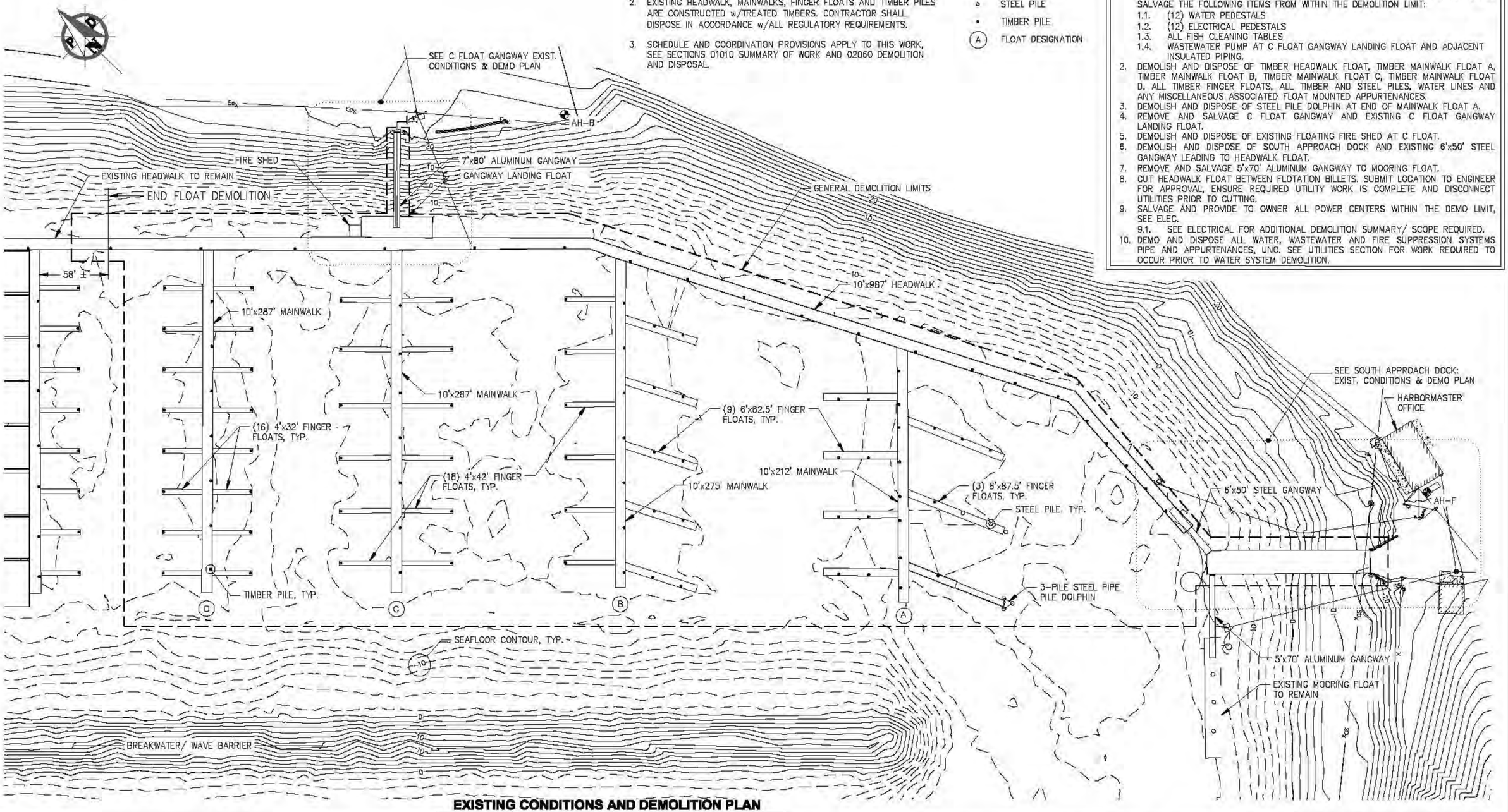

EXISTING CONDITIONS AND DEMOLITION PLAN

REVISIONS

REV.	DATE	DESCRIPTION	DWN.	CKD.	APP.

PND ENGINEERS, INC.
9360 Glacier Highway, Ste. 100
Juneau, Alaska 99801
Phone: 907-586-2093
Fax: 907-586-2099
www.pndengineers.com

DESIGN: MS CHECKED: JLD
DRAWN: WRB APPROVED: CRS
SCALE: SCALE IN FEET 0 40 80 FT.
DATE: 2/28/14

STATE OF ALASKA — John L. DeMuth — CC-8847 — REGISTERED PROFESSIONAL ENGINEER

CITY & BOROUGH OF JUNEAU, ALASKA
AURORA HARBOR REBUILD - PHASE I
CONTRACT NO. DH 12-160

SHEET TITLE:
PHASE I EXISTING CONDITIONS AND DEMOLITION PLAN

PND PROJECT NO.: 122055

1.05
SHEET 5 OF 143

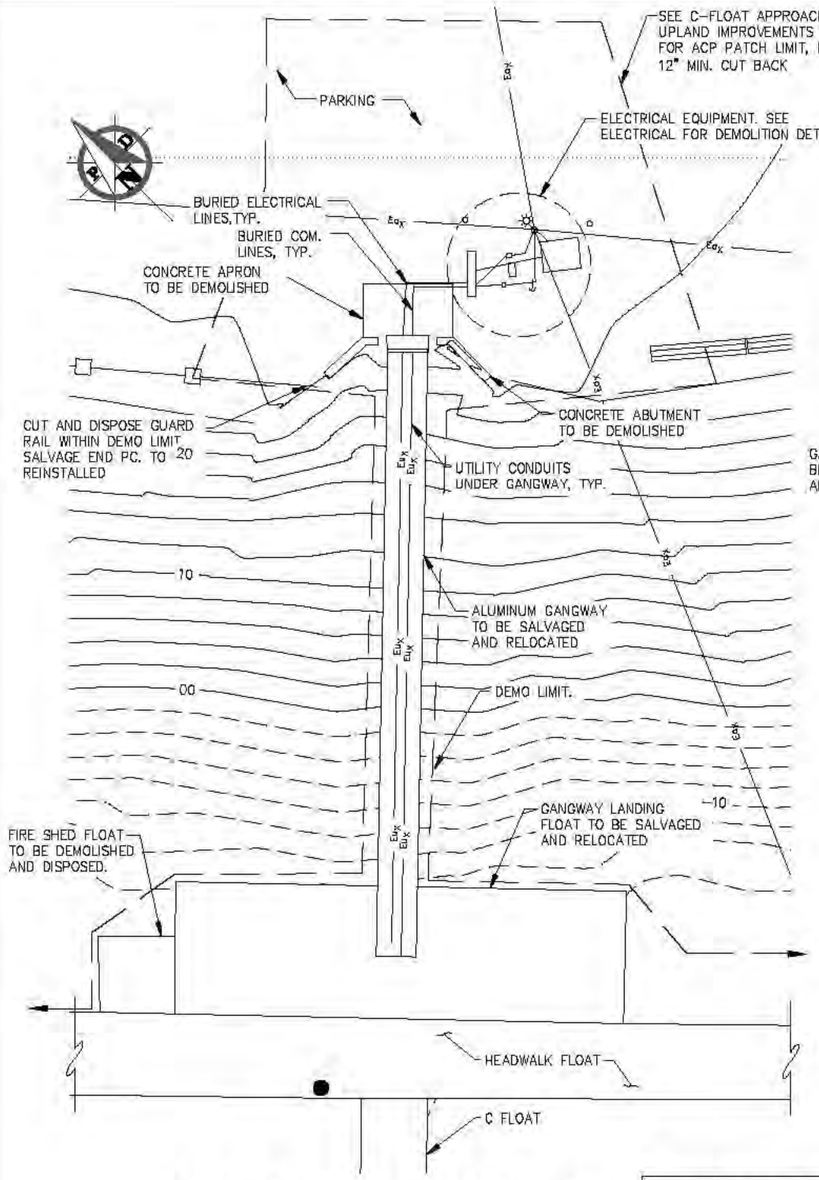

EXISTING C FLOAT GANGWAY - PLAN

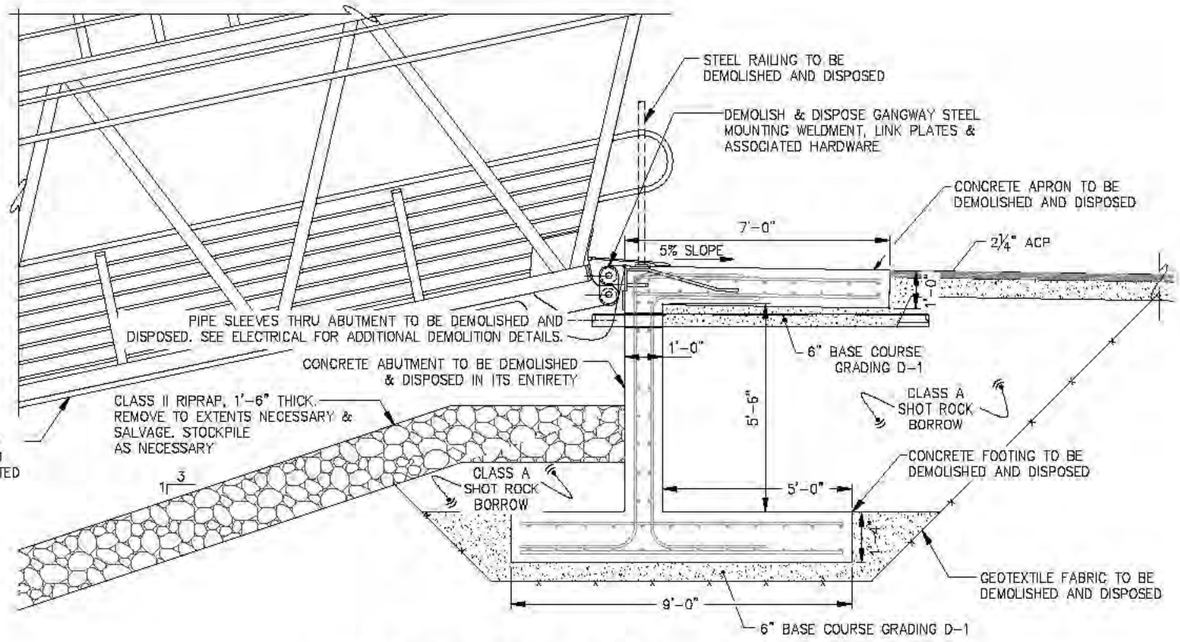

(A) EXISTING CONCRETE ABUTMENT SECTION

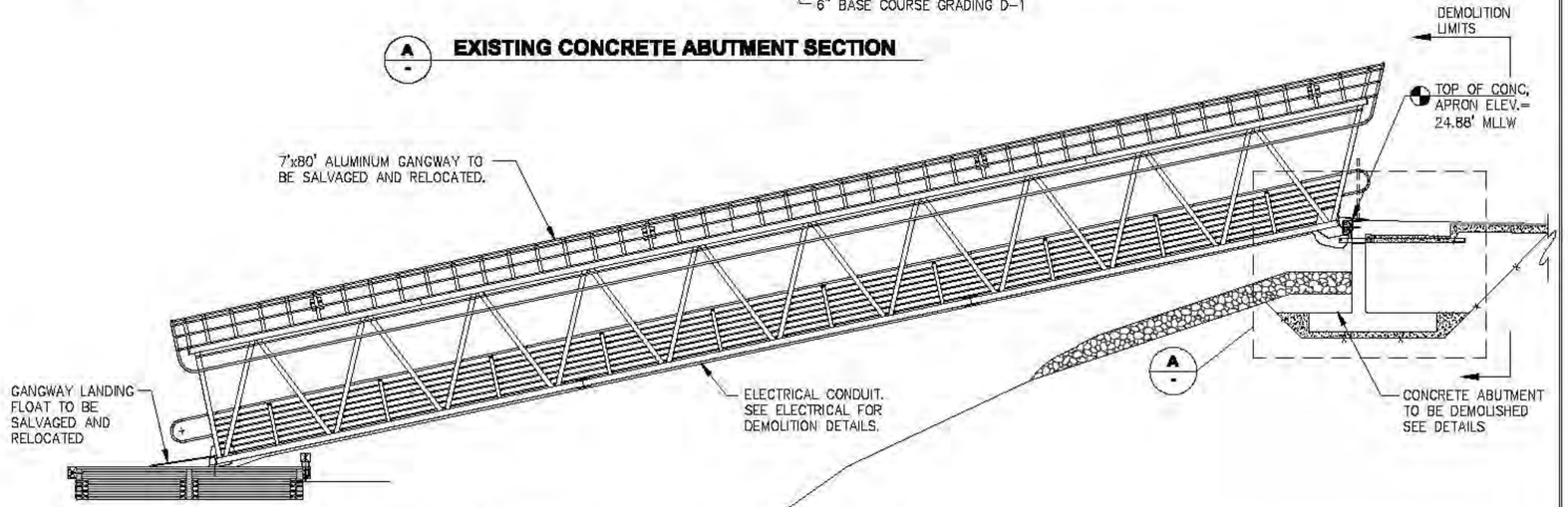

EXISTING C FLOAT GANGWAY - PROFILE

NOTE:
1. STEEL RAILING AT ABUTMENT NOT SHOWN FOR CLARITY
2. APPROXIMATE WEIGHT OF GANGWAY: 12,000 LBS

DEMOLITION SUMMARY - C FLOAT APPROACH DOCK

1. SALVAGE AND RELOCATE 7'x80' ALUMINUM GANGWAY INCLUDING GUIDES AND ALL OTHER MISCELLANEOUS RELATED APPURTENANCES.
2. SALVAGE AND RELOCATE GANGWAY LANDING FLOAT. SEE "C FLOAT GANGWAY LANDING FLOAT DEMOLITION PLAN."
3. DEMOLISH AND DISPOSE OF CONCRETE ABUTMENT, CONCRETE APRON, STEEL RAILING AND ALL OTHER MISCELLANEOUS RELATED APPURTENANCES.

DIAL BEFORE YOU DIG!
586-1333
UNDERGROUND POWER, TELEPHONE, T.V., COMMUNICATIONS, WATER AND WASTEWATER LINES ARE IN THE AREA. UTILITIES SHOWN HERE DO NOT SUBSTITUTE FOR FIELD LOCATES.

REVISIONS

REV.	DATE	DESCRIPTION	DWN.	CKD.	APP.

P N D ENGINEERS, INC.
9360 Glacier Highway, Ste. 100
Juneau, Alaska 99801
Phone: 907-586-2093
Fax: 907-586-2099
www.pndengineers.com

DESIGN: MLB CHECKED: JLD
DRAWN: KLL APPROVED: CRS
SCALE: NTS
DATE: 2/28/14

STATE OF ALASKA — John L. DeMuth — CE-8847 — REGISTERED PROFESSIONAL ENGINEER

CITY & BOROUGH OF JUNEAU, ALASKA
AURORA HARBOR REBUILD - PHASE I
CONTRACT NO. DH 12-160

SHEET TITLE:
C FLOAT GANGWAY EXISTING CONDITIONS AND DEMOLITION PLAN

PND PROJECT NO.: 122055

1.06
SHEET 6 OF 143

DEMOLITION SUMMARY
SOUTH APPROACH DOCK

1. DEMOLISH AND DISPOSE APPROX. 2700 SF OF TIMBER APPROACH DOCK, INCLUDING ALL RAILING, POSTS, BULLRAIL, DECKING, STRINGERS, PILE CAPS, SUPPORT PILES, BRACING, BRACKETS, PIPES, CONDUIT AND ALL OTHER APPURTENANCES. PILES TO BE REMOVED IN THEIR ENTIRETY.
2. DEMOLISH AND DISPOSE 6'x50' STEEL GANGWAY INCLUDING ALL MOUNTING HARDWARE AND ALL OTHER MISCELLANEOUS RELATED APPURTENANCES.
3. SALVAGE AND REINSTALL 5'x70' ALUMINUM GANGWAY TO MOORING FLOAT INCLUDING MOUNTING HARDWARE AND ALL OTHER MISCELLANEOUS RELATED APPURTENANCES.
4. DEMOLISH AND DISPOSE OF TIMBER BULKHEAD, INCLUDING ALL RAILING, BULLRAIL, TIMBER CAPS, TIMBER PLANKS, PILES, BRACING, SUSPEND CONDUIT/PIPE AND OTHER APPURTENANCES. PILES TO BE REMOVED IN THEIR ENTIRETY. CONDUIT & PIPE PENETRATING TIMBER BULKHEAD SHALL BE REMOVED TO THE EXCAVATION LIMITS AND CAPPED, PER ENGINEER DIRECTION.
5. SALVAGE AND RELOCATE KIOSK, BENCH, MOUNTING HARDWARE AND ALL OTHER ASSOCIATED APPURTENANCES.
6. SEE ELECTRICAL FOR DEMOLITION SUMMARY/ SCOPE REQUIRED.

DIAL BEFORE YOU DIG!
586-1333
UNDERGROUND POWER, TELEPHONE, T.V., COMMUNICATIONS, WATER AND WASTEWATER LINES ARE IN THE AREA. UTILITIES SHOWN HERE DO NOT SUBSTITUTE FOR FIELD LOCATES.

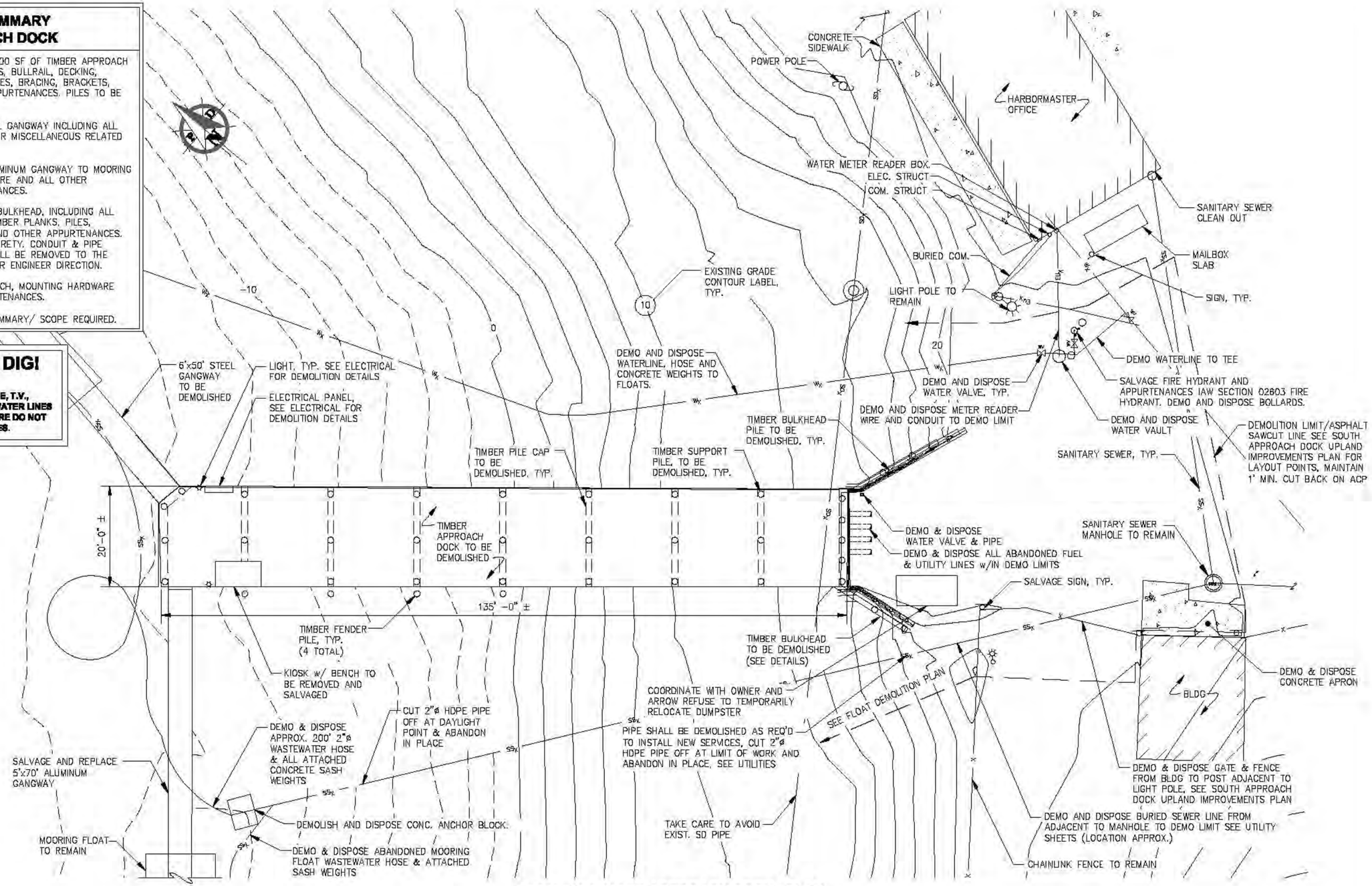

EXISTING TIMBER APPROACH DOCK - PLAN

REVISIONS

REV.	DATE	DESCRIPTION	DWN.	CKD.	APP.

PND ENGINEERS, INC.
9360 Glacier Highway, Ste. 100
Juneau, Alaska 99801
Phone: 907-586-2093
Fax: 907-586-2099
www.pndengineers.com

DESIGN: MLB CHECKED: JLD
DRAWN: KLL APPROVED: CRS
SCALE: SCALE IN FEET 0 10 20 FT.
DATE: 2/28/14

STATE OF ALASKA — 49TH — REGISTERED PROFESSIONAL ENGINEER — John L. Dellath — CC-8847

CITY & BOROUGH OF JUNEAU, ALASKA
AURORA HARBOR REBUILD - PHASE I
CONTRACT NO. DH 12-160

SHEET TITLE:
SOUTH APPROACH DOCK EXISTING CONDITIONS & DEMOLITION PLAN

PND PROJECT NO.: 122055

1.07
SHEET 7 OF 143

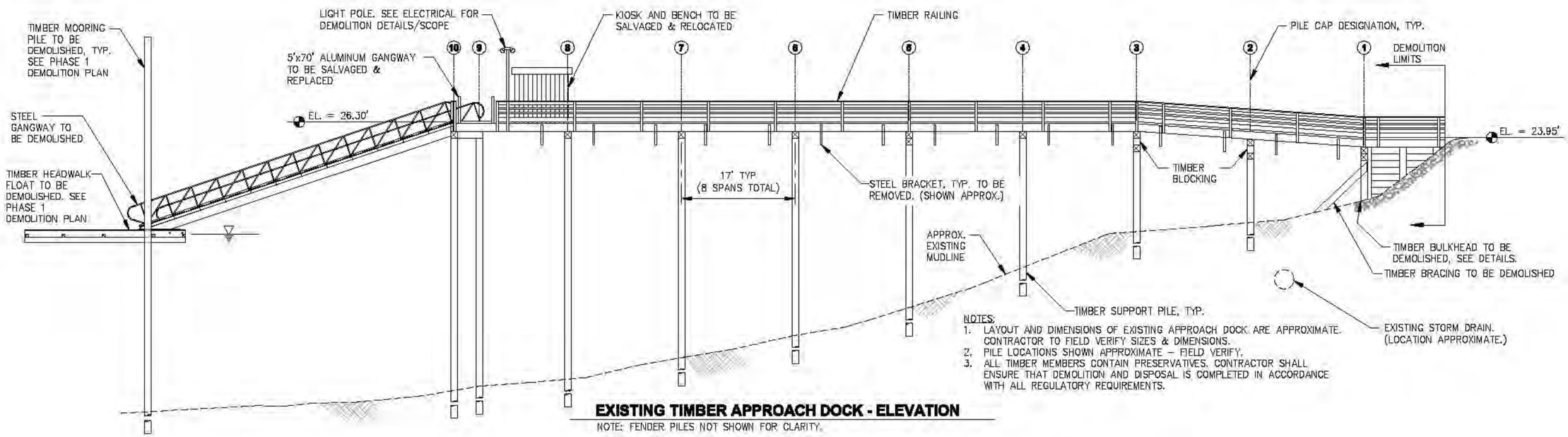

NOTES:
1. LAYOUT AND DIMENSIONS OF EXISTING APPROACH DOCK ARE APPROXIMATE. CONTRACTOR TO FIELD VERIFY SIZES & DIMENSIONS.
2. PILE LOCATIONS SHOWN APPROXIMATE – FIELD VERIFY.
3. ALL TIMBER MEMBERS CONTAIN PRESERVATIVES. CONTRACTOR SHALL ENSURE THAT DEMOLITION AND DISPOSAL IS COMPLETED IN ACCORDANCE WITH ALL REGULATORY REQUIREMENTS.

EXISTING TIMBER APPROACH DOCK - ELEVATION

NOTE: FENDER PILES NOT SHOWN FOR CLARITY.

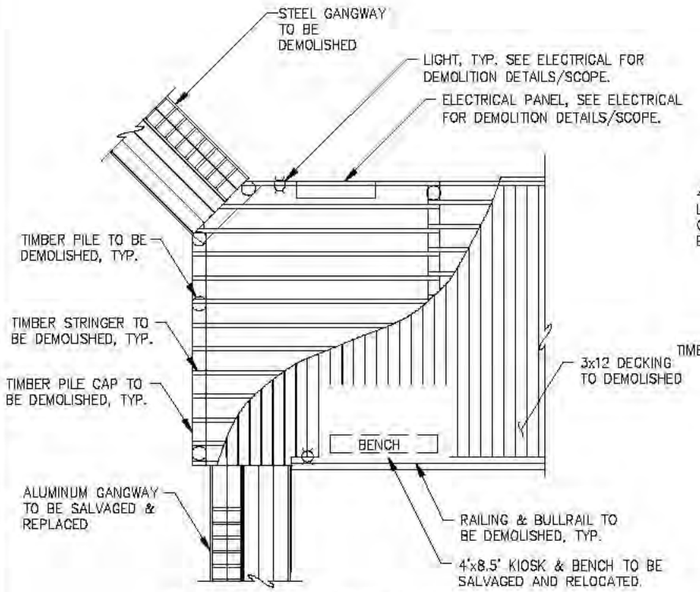

APPROACH DOCK PLAN - NORTH END

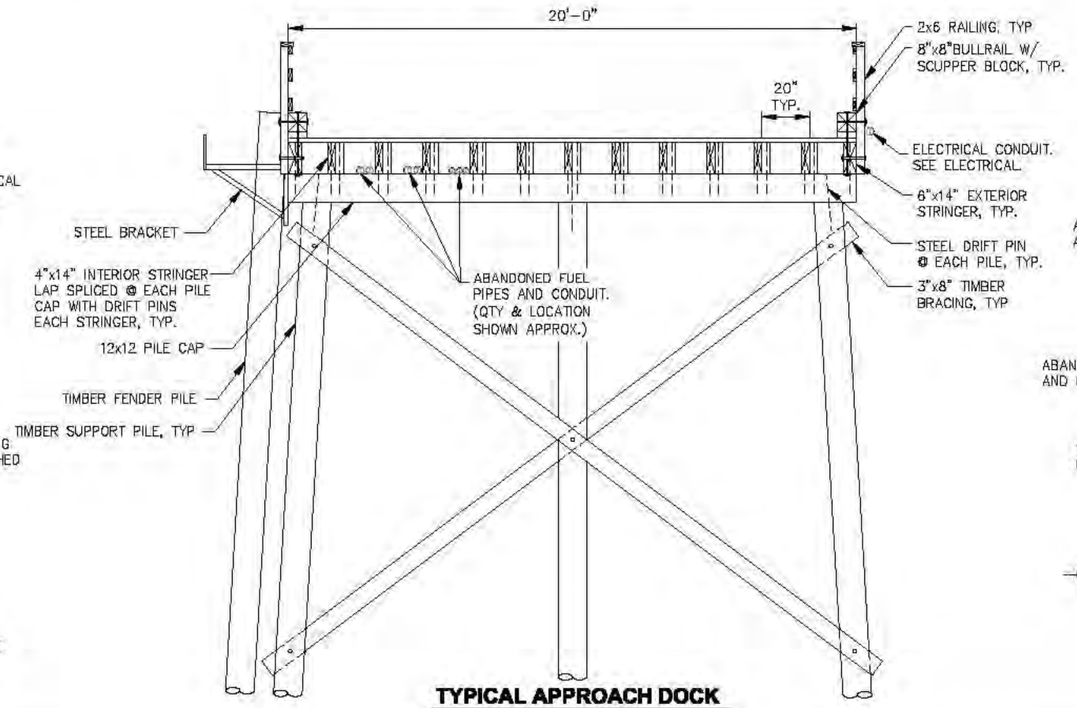

TYPICAL APPROACH DOCK SECTION

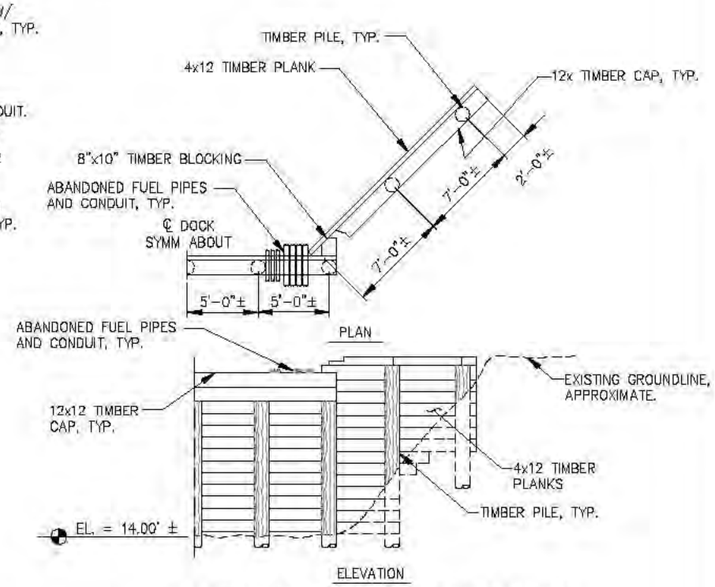

EXISTING TIMBER BULKHEAD DETAILS

REVISIONS

REV.	DATE	DESCRIPTION	DWN.	CKD.	APP.

PND ENGINEERS, INC.
9360 Glacier Highway, Ste. 100
Juneau, Alaska 99801
Phone: 907-586-2093
Fax: 907-586-2099
www.pndengineers.com

DESIGN: MLB CHECKED: JLD
DRAWN: KLL APPROVED: CRS
SCALE: NTS
DATE: 2/28/14

STATE OF ALASKA — REGISTERED PROFESSIONAL ENGINEER — John L. DeMuth CE-8847

CITY & BOROUGH OF JUNEAU, ALASKA
AURORA HARBOR REBUILD - PHASE I
CONTRACT NO. DH 12-160

SHEET TITLE: **SOUTH APPROACH DOCK DEMOLITION DETAILS**

PND PROJECT NO.: 122055

1.08
SHEET 8 OF 143

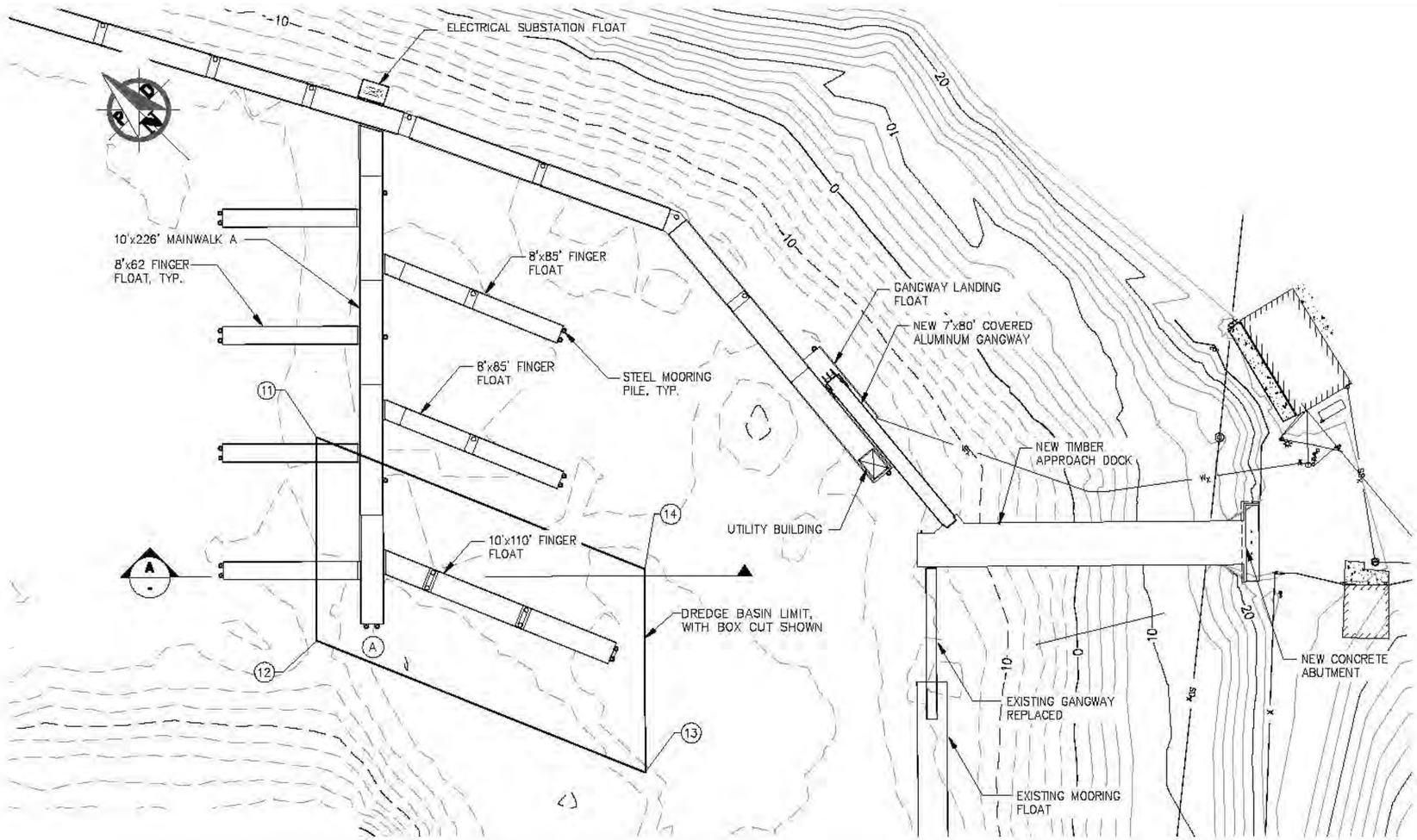

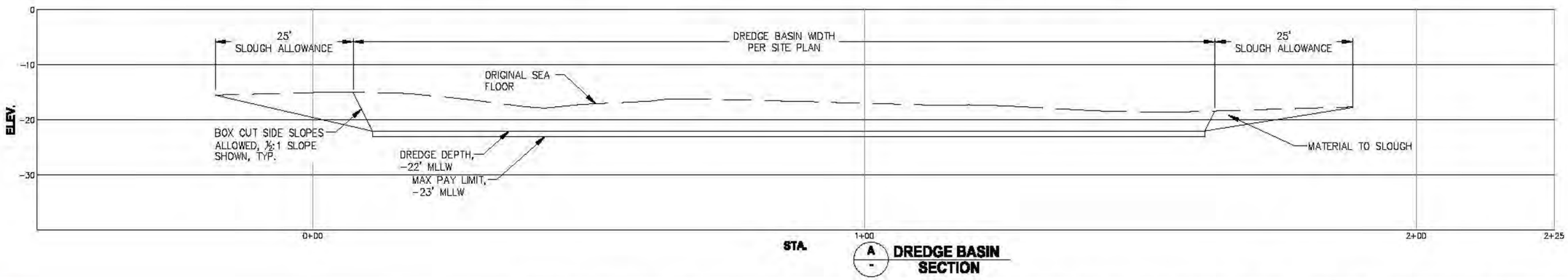

A/- DREDGE BASIN SECTION

LAYOUT TABLE

POINT NO.	NORTHING	EASTING	ELEVATION	DESCRIPTION
11	2364381.60	2538620.21	-22.00	CNR DREDGE BASIN
12	2364315.74	2538553.83	-22.00	CNR DREDGE BASIN
13	2364165.73	2538616.80	-22.00	CNR DREDGE BASIN
14	2364231.59	2538683.19	-22.00	CNR DREDGE BASIN

DREDGE QUANTITIES

DREDGE LIMIT	DREDGE QUANTITY IN CY
DESIGN DEPTH -22' MLLW	2600
MAX PAY LIMIT -23' MLLW	3100

NOTE:
1. DESIGN DEPTH QUANTITY CALCULATED WITH ½:1 SIDE SLOPES AS SHOWN IN SECTION VIEW.
2. VOLUMES ARE APPROXIMATE, FINAL PAY QUANTITIES SHALL BE DETERMINED BY THE PRE AND POST DREDGE SURVEYS.

REVISIONS

REV.	DATE	DESCRIPTION	DWN.	CKD.	APP.

PND ENGINEERS, INC.
9360 Glacier Highway, Ste. 100
Juneau, Alaska 99801
Phone: 907-586-2093
Fax: 907-586-2099
www.pndengineers.com

DESIGN: MS CHECKED: JLD
DRAWN: WRB APPROVED: CRS
SCALE: SCALE IN FEET 0 30 60 FT.
DATE: 2/28/14

STATE OF ALASKA — John L. DeMuth CE-8847 — REGISTERED PROFESSIONAL ENGINEER

CITY & BOROUGH OF JUNEAU, ALASKA
AURORA HARBOR REBUILD - PHASE I
CONTRACT NO. DH 12-160

SHEET TITLE: DREDGING PLAN - ADD. ALT.

PND PROJECT NO.: 122055

1.09
SHEET 9 OF 143

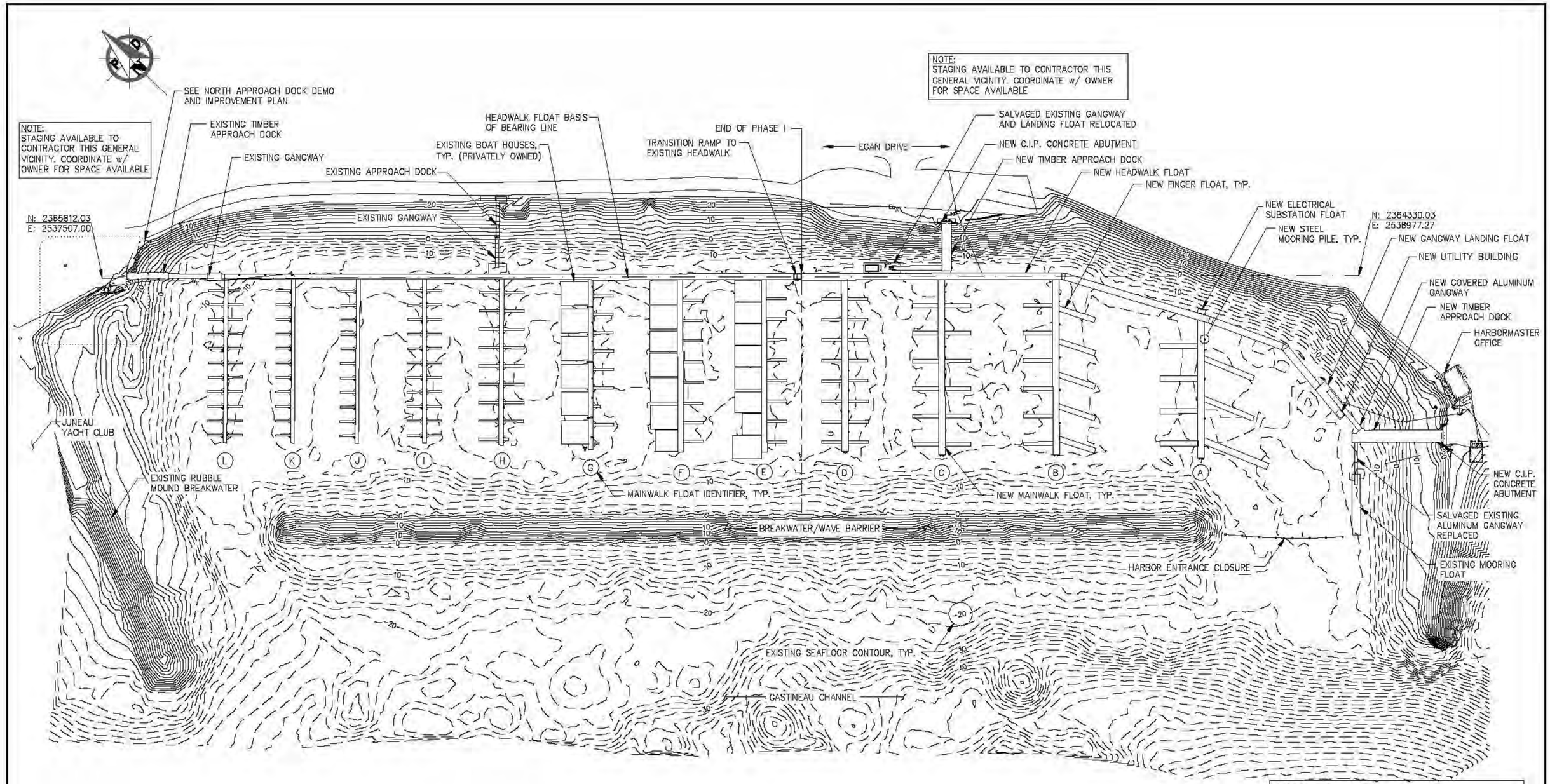

NOTE:
HARBOR LAYOUT IS CONTROLLED BY THE ALIGNMENT OF THE NEW HEADWALK MODULES WITH RESPECT TO THE NEW SOUTH APPROACH DOCK AND THE EXISTING HEADWALK FLOAT. CONTRACTOR SHALL VERIFY ALIGNMENT OF HEADWALK AT BOTH ENDS PRIOR TO FINAL DRIVING OF THE FLOAT PILES OR ASSEMBLING MAIN FLOATS A–D.

REVISIONS

REV.	DATE	DESCRIPTION	DWN.	CKD.	APP.

P N D ENGINEERS, INC.
9360 Glacier Highway, Ste. 100
Juneau, Alaska 99801
Phone: 907-586-2093
Fax: 907-586-2099
www.pndengineers.com

DESIGN: MS CHECKED: JLD
DRAWN: WRB APPROVED: CRS
SCALE: SCALE IN FEET 0 80 160 FT.
DATE: 2/28/14

STATE OF ALASKA — John L. Dalluth — CE-8847 — REGISTERED PROFESSIONAL ENGINEER

CITY & BOROUGH OF JUNEAU, ALASKA
AURORA HARBOR REBUILD - PHASE I
CONTRACT NO. DH 12-160

SHEET TITLE: **SITE PLAN - OVERALL**

PND PROJECT NO.: 122055

1.10
SHEET 10 OF 143

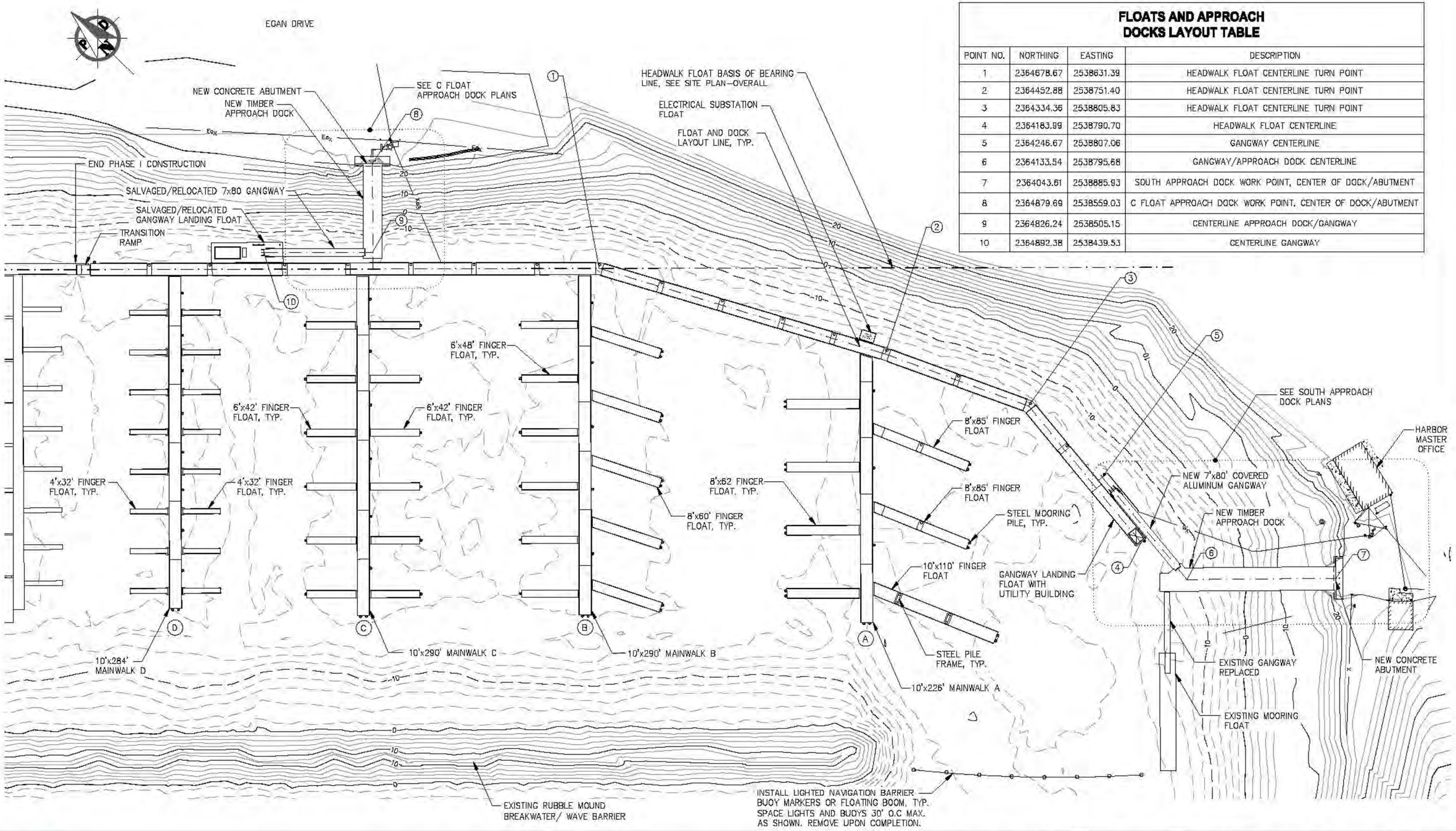

FLOATS AND APPROACH DOCKS LAYOUT TABLE

POINT NO.	NORTHING	EASTING	DESCRIPTION
1	2364678.67	2538631.39	HEADWALK FLOAT CENTERLINE TURN POINT
2	2364452.88	2538751.40	HEADWALK FLOAT CENTERLINE TURN POINT
3	2364334.36	2538805.83	HEADWALK FLOAT CENTERLINE TURN POINT
4	2364183.99	2538790.70	HEADWALK FLOAT CENTERLINE
5	2364246.67	2538807.06	GANGWAY CENTERLINE
6	2364133.54	2538795.68	GANGWAY/APPROACH DOCK CENTERLINE
7	2364043.61	2538885.93	SOUTH APPROACH DOCK WORK POINT, CENTER OF DOCK/ABUTMENT
8	2364879.69	2538559.03	C FLOAT APPROACH DOCK WORK POINT, CENTER OF DOCK/ABUTMENT
9	2364826.24	2538505.15	CENTERLINE APPROACH DOCK/GANGWAY
10	2364892.38	2538439.53	CENTERLINE GANGWAY

CITY & BOROUGH OF JUNEAU DOCKS & HARBORS

REVISIONS

REV.	DATE	DESCRIPTION	DWN.	CKD.	APP.

P N D ENGINEERS, INC.
9360 Glacier Highway, Ste. 100
Juneau, Alaska 99801
Phone: 907-586-2093
Fax: 907-586-2099
www.pndengineers.com

DESIGN: MS CHECKED: JLD
DRAWN: WRB APPROVED: CRS
SCALE: SCALE IN FEET 0 40 80 FT.

STATE OF ALASKA — John L. DeWath CE-8847 — REGISTERED PROFESSIONAL CIVIL ENGINEER
DATE: 2/28/14

CITY & BOROUGH OF JUNEAU, ALASKA
AURORA HARBOR REBUILD - PHASE I
CONTRACT NO. DH 12-160

SHEET TITLE: **SITE PLAN - PHASE I**

PND PROJECT NO.: 122055

1.11
SHEET 11 OF 143

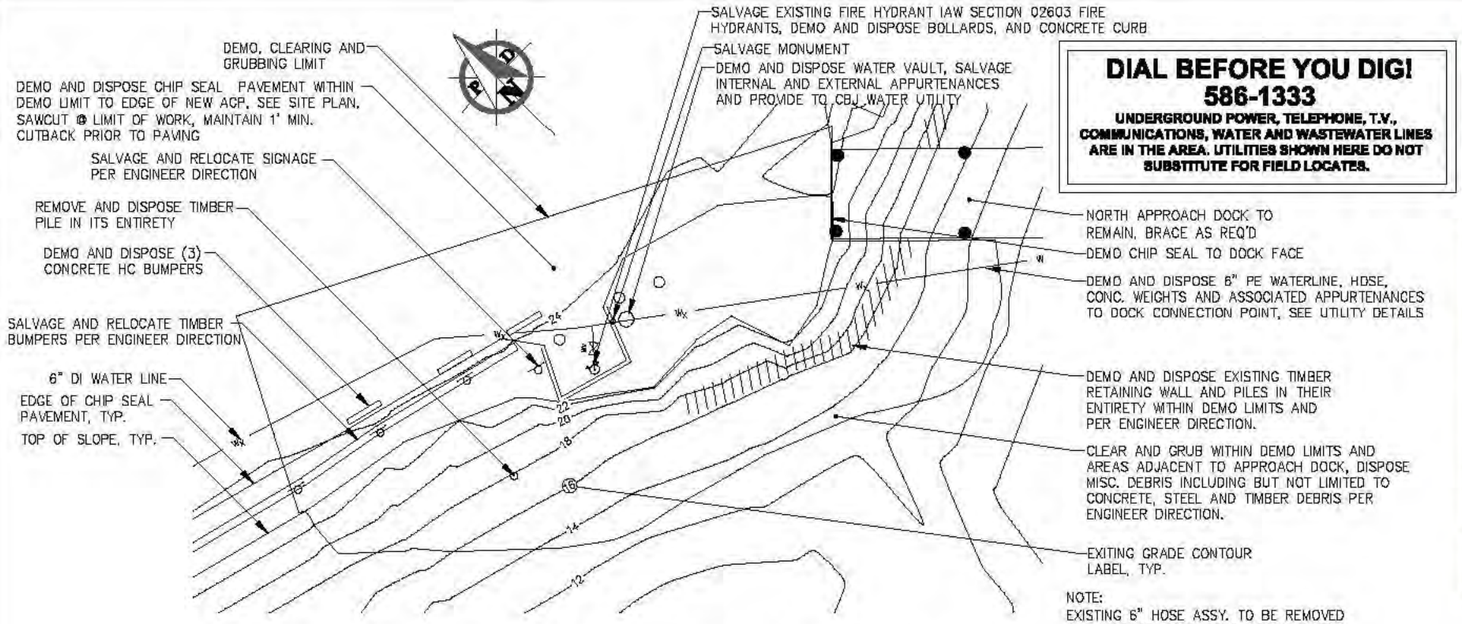

DIAL BEFORE YOU DIG!
586-1333
UNDERGROUND POWER, TELEPHONE, T.V., COMMUNICATIONS, WATER AND WASTEWATER LINES ARE IN THE AREA. UTILITIES SHOWN HERE DO NOT SUBSTITUTE FOR FIELD LOCATES.

NOTE:
EXISTING 6" HOSE ASSY. TO BE REMOVED AND DISPOSED HAS BEEN DISCONNECTED FROM THE FLOAT SYSTEM AND IS ABANDONED ON THE SEA FLOOR. HOSE AND CONC. WEIGHTS SHALL BE REMOVED AND DISPOSED IN THEIR ENTIRETY.

NORTH APPROACH DOCK DEMOLITION PLAN

SCALE IN FEET
0 10 20 FT.

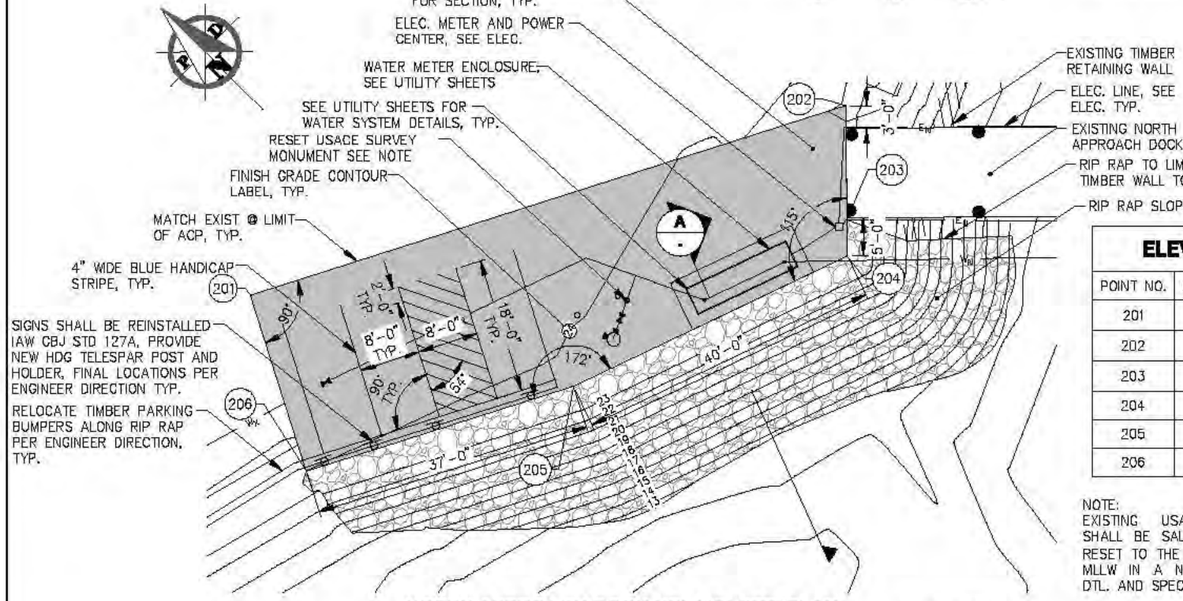

ELEVATION TABLE

POINT NO.	ELEVATION	DESCRIPTION
201	24.67	ACP, ME
202	24.10	ACP, ME
203	24.00	ACP, ME
204	23.85	EDGE ACP
205	23.90	EDGE ACP
206	24.00	EDGE ACP

NOTE:
EXISTING USACE SURVEY MONUMENT SHALL BE SALVAGED OR REPLACED AND RESET TO THE RECORDED ELEV. OF 23.51' MLLW IN A NEW MONUMENT CASE, SEE DTL. AND SPECIFICATIONS.

NORTH APPROACH DOCK UPLAND SITE PLAN

SCALE IN FEET
0 10 20 FT.



NOTE:
TIMBER RETAINING WALL & TIMBER PILES TO BE REMOVED IN THEIR ENTIRETY ALONG NORTH WEST SIDE OF APPROACH DOCK AS SHOWN. THE AREA SHALL BE REGRADED AND COMPACTED PRIOR TO PLACEMENT OF NEW SHOT ROCK BORROW.

RETAINING WALL DEMOLITION LIMIT DETAIL

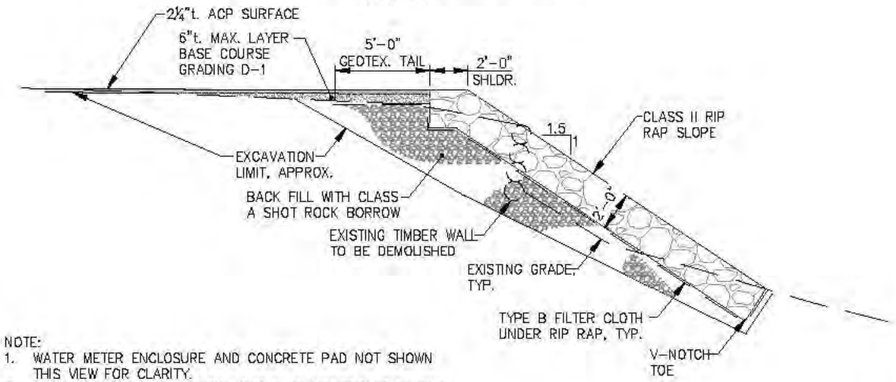

NOTE:
1. WATER METER ENCLOSURE AND CONCRETE PAD NOT SHOWN THIS VIEW FOR CLARITY.
2. EXISTING SUBGRADE MATERIAL SHALL BE UTILIZED TO EXTENT PRACTICABLE AND PER ENGINEER DIRECTION.
3. REGRADE EXISTING SUBGRADE AND COMPACT TO 95% MAXIMUM DENSITY PER ENGINEER DIRECTION.

A - NORTH APPROACH DOCK UPLAND FILL TYPICAL SECTION

REVISIONS

REV.	DATE	DESCRIPTION	DWN.	CKD.	APP.

PND ENGINEERS, INC.
9360 Glacier Highway, Ste. 100
Juneau, Alaska 99801
Phone: 907-586-2093
Fax: 907-586-2099
www.pndengineers.com

DESIGN: TCB CHECKED: JLD
DRAWN: TCB APPROVED: CRS
SCALE: AS SHOWN
DATE: 2/28/14

STATE OF ALASKA — John L. DeMuth — CC-8847 — REGISTERED PROFESSIONAL ENGINEER

CITY & BOROUGH OF JUNEAU, ALASKA
AURORA HARBOR REBUILD - PHASE I
CONTRACT NO. DH 12-160

SHEET TITLE:
NORTH APPROACH DOCK DEMO AND IMPROVEMENTS PLAN
PND PROJECT NO.: 122055

1.12
SHEET 12 OF 143

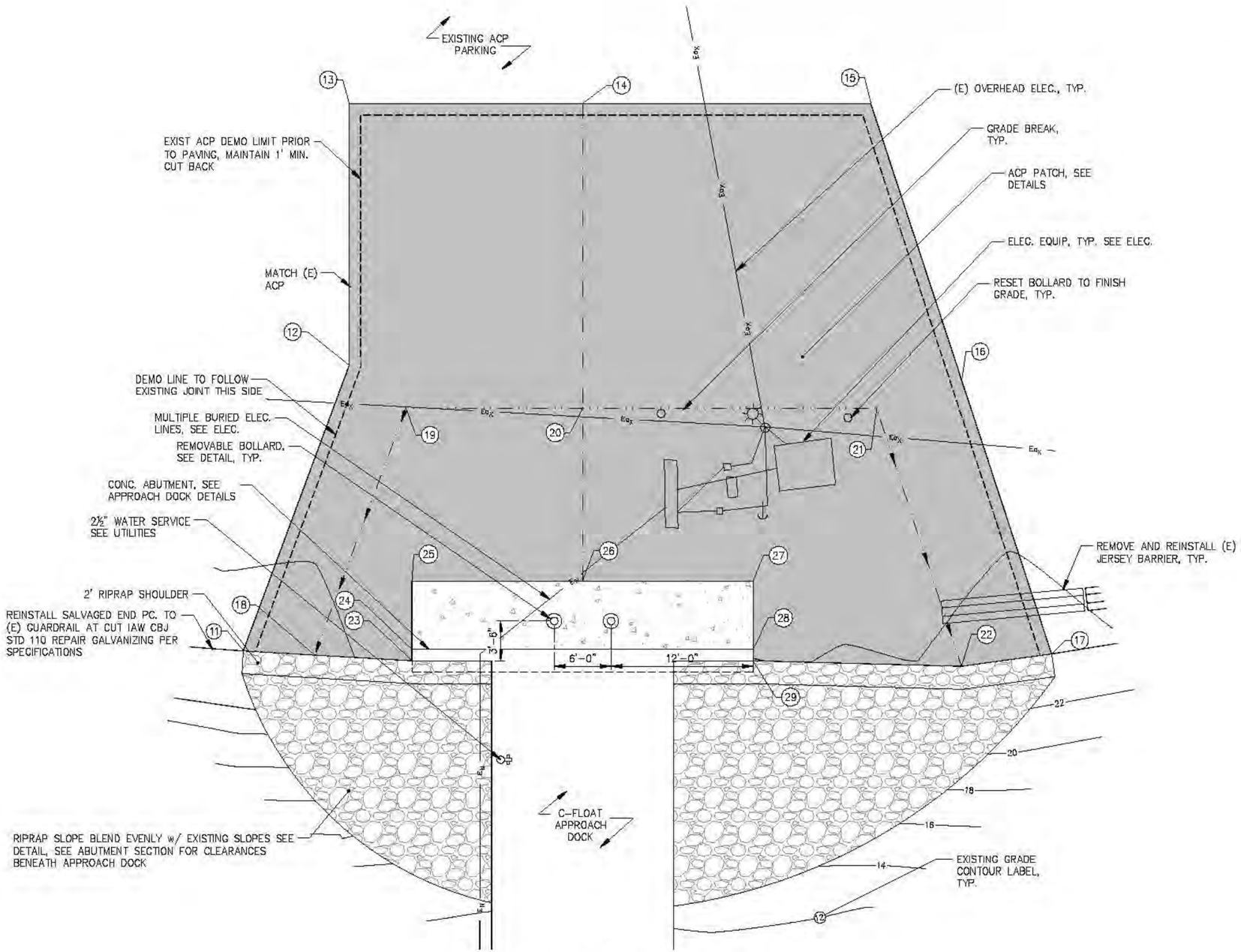

C FLOAT APPROACH DOCK UPLAND SITE PLAN

LAYOUT TABLE				
POINT NO.	NORTHING	EASTING	ELEVATION	DESCRIPTION
11	2364900.77	2538537.92	23.80	EDGE ACP, ME
12	2364911.85	2538562.30	24.50	EDGE ACP, ME
13	2364928.07	2538578.65	24.88	EDGE ACP, ME
14	2364913.50	2538593.11	24.87	EDGE ACP, ME
15	2364895.49	2538610.97	24.81	EDGE ACP, ME
16	2364872.69	2538599.32	24.31	EDGE ACP, ME
17	2364850.11	2538587.80	23.83	EDGE ACP, ME
18	2364896.07	2538542.07	23.76	SWALE
19	2364905.85	2538563.16	24.44	SWALE
20	2364894.63	2538574.09	24.48	GRADE BREAK
21	2364876.27	2538592.30	24.23	SWALE
22	2364854.98	2538581.43	23.78	SWALE
23	2364889.63	2538547.75	24.80	EDGE ACP/ CONC
24	2364890.34	2538548.46	24.80	EDGE ACP/ CONC
25	2364894.56	2538552.72	24.68	EDGE ACP/ CONC
26	2364883.91	2538563.29	24.68	EDGE ACP/ CONC
27	2364873.26	2538573.85	24.68	EDGE ACP/ CONC
28	2364869.04	2538569.59	24.80	EDGE ACP/ CONC
29	2364868.33	2538568.88	24.80	EDGE ACP/ CONC

DIAL BEFORE YOU DIG!
586-1333
UNDERGROUND POWER, TELEPHONE, T.V., COMMUNICATIONS, WATER AND WASTEWATER LINES ARE IN THE AREA. UTILITIES SHOWN HERE DO NOT SUBSTITUTE FOR FIELD LOCATES.

NOTE:
1. PARKING AND TRAFFIC MARKING PAINT REMOVED DURING ACP DEMO SHALL BE REPAINTED IAW SECTION 02720 PAINTED TRAFFIC MARKINGS.
2. DISTURBED SIGNS SHALL BE REINSTALLED IAW CBJ STD 127A, PROVIDE NEW HDG TELESPAR POST AND HOLDER, FINAL LOCATIONS PER ENGINEER DIRECTION TYP.

CITY & BOROUGH OF JUNEAU DOCKS & HARBORS

REVISIONS

REV.	DATE	DESCRIPTION	DWN.	CKD.	APP.

PND ENGINEERS, INC.
9360 Glacier Highway, Ste. 100
Juneau, Alaska 99801
Phone: 907-586-2093
Fax: 907-586-2099
www.pndengineers.com

DESIGN: TCB CHECKED: JLD
DRAWN: TCB APPROVED: CRS
SCALE: SCALE IN FEET 0 5 10 FT.
DATE: 2/28/14

STATE OF ALASKA — John L. Dekkah — CC-8847 — REGISTERED PROFESSIONAL CIVIL ENGINEER

CITY & BOROUGH OF JUNEAU, ALASKA
AURORA HARBOR REBUILD - PHASE I
CONTRACT NO. DH 12-160

SHEET TITLE:
C FLOAT APPROACH DOCK UPLAND IMPROVEMENTS PLAN

PND PROJECT NO.: 122055

1.13
SHEET 13 OF 143

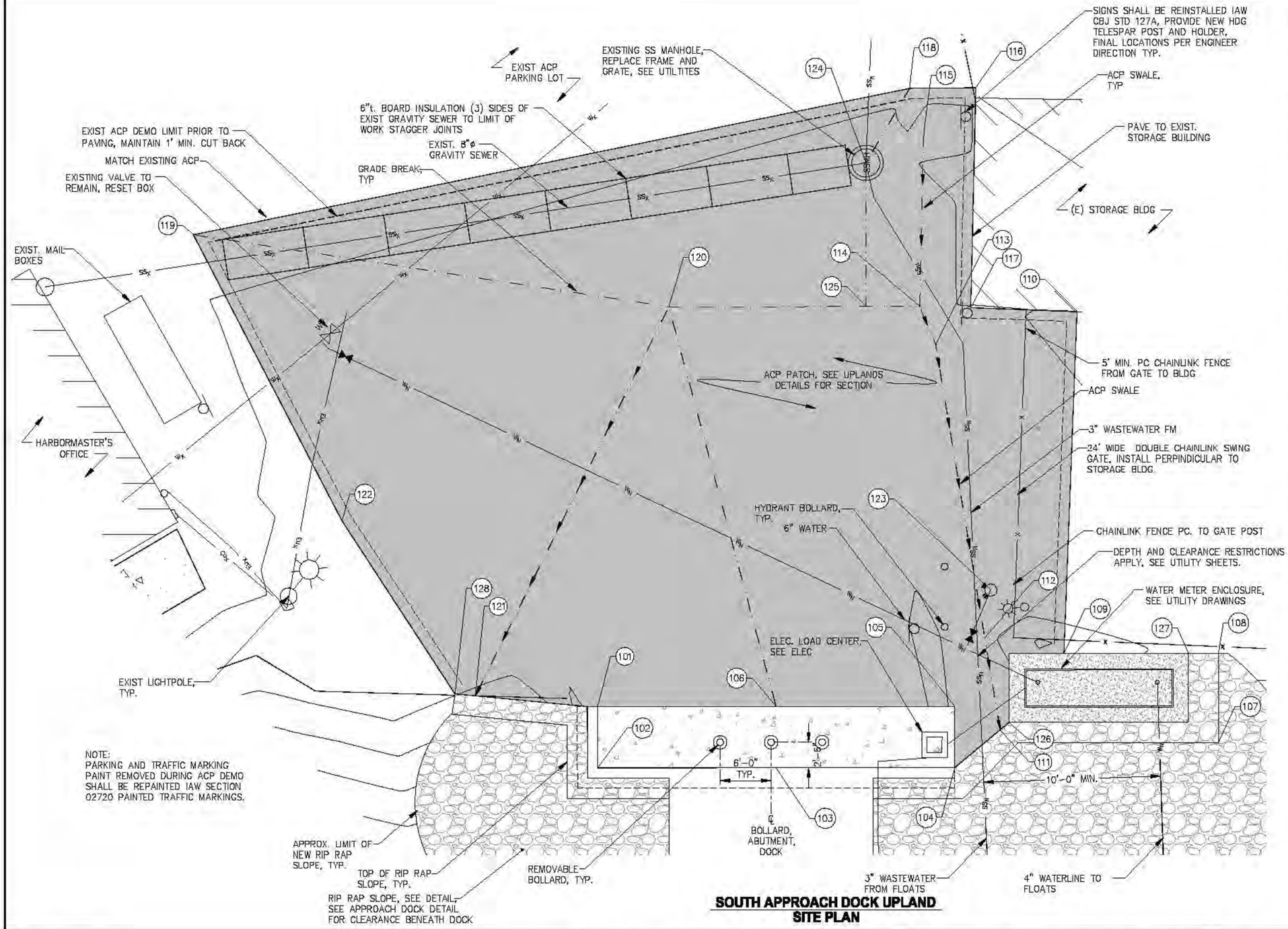

SOUTH APPROACH DOCK UPLAND
SITE PLAN

LAYOUT TABLE

POINT NO.	NORTHING	EASTING	ELEVATION	DESCRIPTION
101	2364051.41	2538902.18	23.88	EDGE ACP
102	2364055.65	2538897.93	24.00	CONC APRON
103	2364043.25	2538885.58	24.00	CONC APRON
104	2364030.86	2538873.23	24.00	CONC APRON
105	2364026.62	2538877.48	23.88	EDGE ACP
106	2364039.02	2538889.83	23.88	EDGE ACP/GB
107	2364010.81	2538856.69	24.00	TOP OF RIPRAP SLOPE
108	2364004.64	2538862.89	24.00	TOP OF RIPRAP SLOPE
109	2364015.37	2538873.59	24.20	EDGE ACP
110	2363990.81	2538896.37	24.29	EDGE ACP
111	2364025.08	2538872.70	23.35	SWALE
112	2364019.81	2538880.12	23.38	SWALE
113	2364002.90	2538903.89	23.44	SWALE
114	2364001.36	2538907.63	23.44	SWALE
115	2363989.05	2538919.44	23.81	SWALE
116	2363982.33	2538918.95	24.06	EDGE ACP
117	2363997.90	2538904.02	23.59	EDGE ACP/BLDG COR
118	2363986.98	2538923.48	24.00	EDGE ACP
119	2364046.82	2538962.91	24.20	EDGE ACP
120	2364018.79	2538925.00	24.10	GB
121	2364059.16	2538911.40	23.44	SWALE
122	2364056.31	2538932.78	23.70	EDGE ACP
123	2364016.07	2538883.06	23.49	HYDRANT
124	2363995.17	2538921.35	24.00	SSMH RE
125	2364005.12	2538911.37	23.60	GB
126	2364023.94	2538872.60	24.50	CNR CONC SLAB (TOP)
127	2364006.72	2538864.97	24.50	CNR CONC SLAB (TOP)
128	2364060.44	2538912.95	23.50	EDGE ACP, ME

DIAL BEFORE YOU DIG!
586-1333
UNDERGROUND POWER, TELEPHONE, T.V., COMMUNICATIONS, WATER AND WASTEWATER LINES ARE IN THE AREA. UTILITIES SHOWN HERE DO NOT SUBSTITUTE FOR FIELD LOCATES.

CITY & BOROUGH OF JUNEAU DOCKS & HARBORS

REVISIONS

REV.	DATE	DESCRIPTION	DWN.	CKD.	APP.

P N D ENGINEERS, INC.
9360 Glacier Highway, Ste. 100
Juneau, Alaska 99801
Phone: 907-586-2093
Fax: 907-586-2099
www.pndengineers.com

DESIGN: TCB CHECKED: JLD
DRAWN: TCB APPROVED: CRS
SCALE: SCALE IN FEET 0 5 10 FT.

STATE OF ALASKA — REGISTERED PROFESSIONAL ENGINEER — John L. DeMuth CC-8847
DATE: 2/28/14

CITY & BOROUGH OF JUNEAU, ALASKA
AURORA HARBOR REBUILD - PHASE I
CONTRACT NO. DH 12-160

SHEET TITLE: **SOUTH APPROACH DOCK UPLAND IMPROVEMENTS PLAN**
PND PROJECT NO.: 122055

1.14
SHEET 14 OF 143

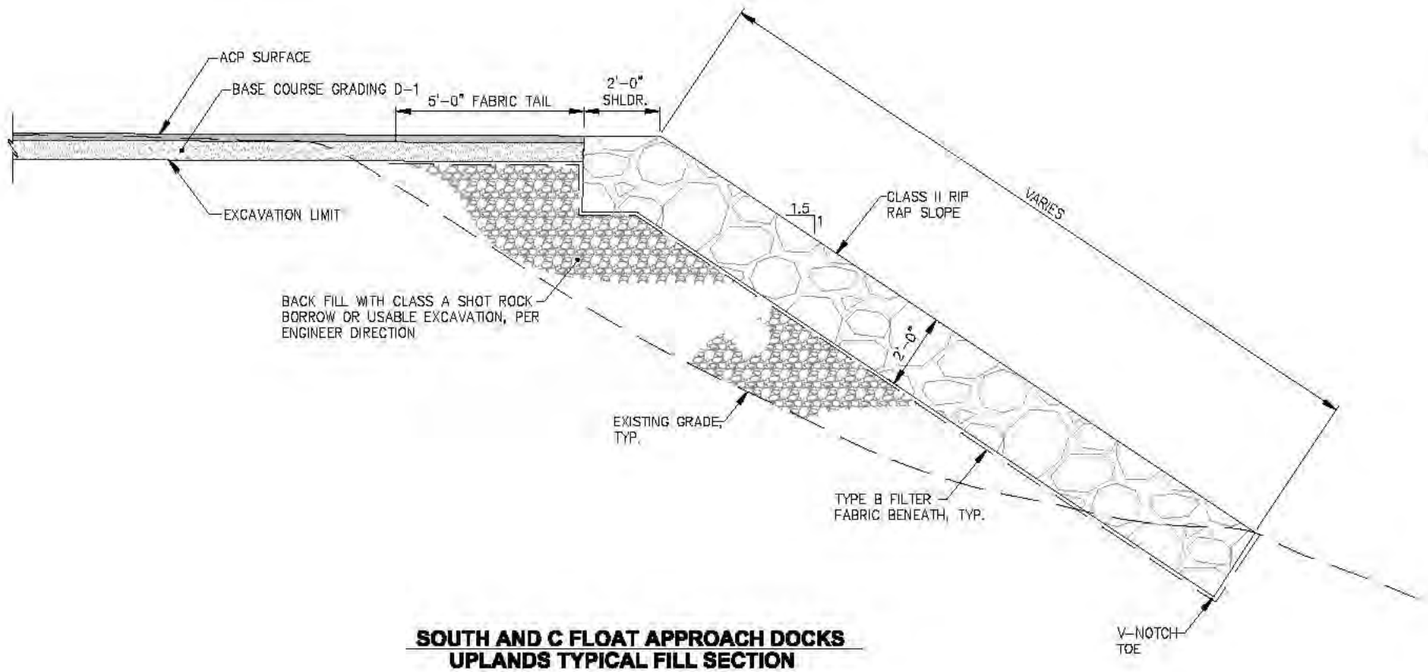

SOUTH AND C FLOAT APPROACH DOCKS
UPLANDS TYPICAL FILL SECTION

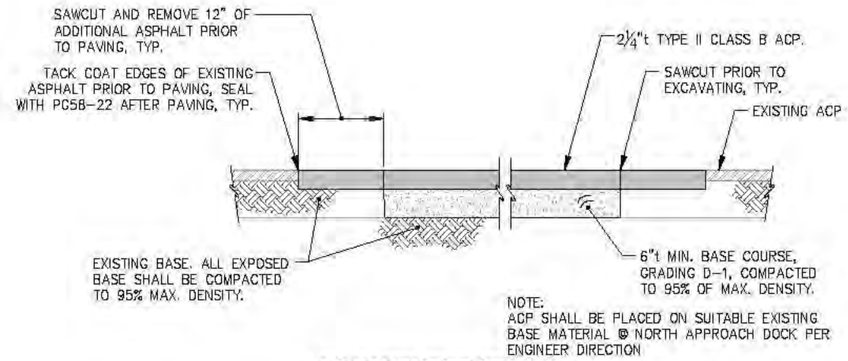

AC PAVEMENT SECTION

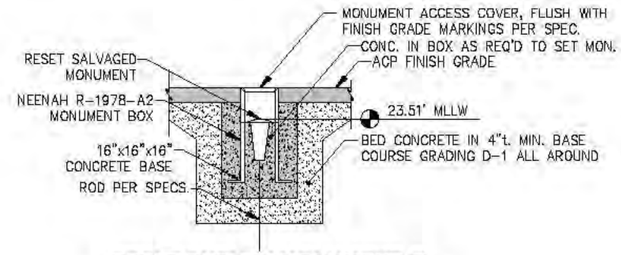

RESET SURVEY MONUMENT @
NORTH APPRACH DOCK UPLAND

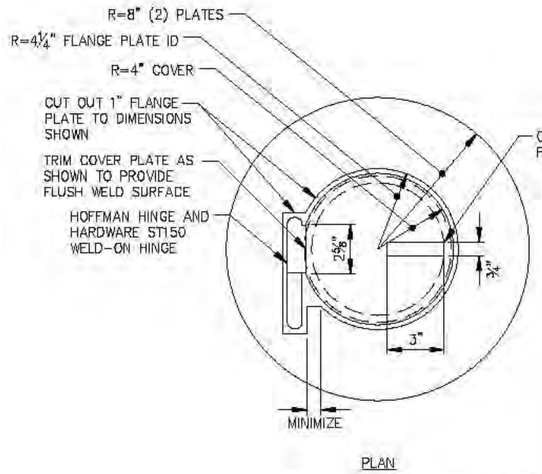

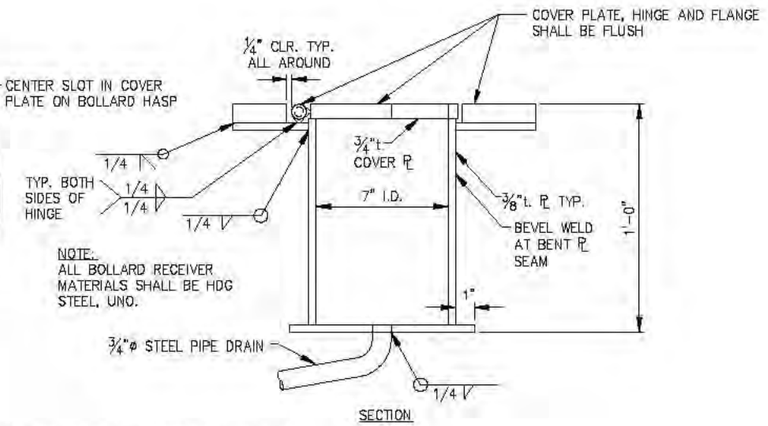

REMOVABLE BOLLARD RECEIVER
DETAIL

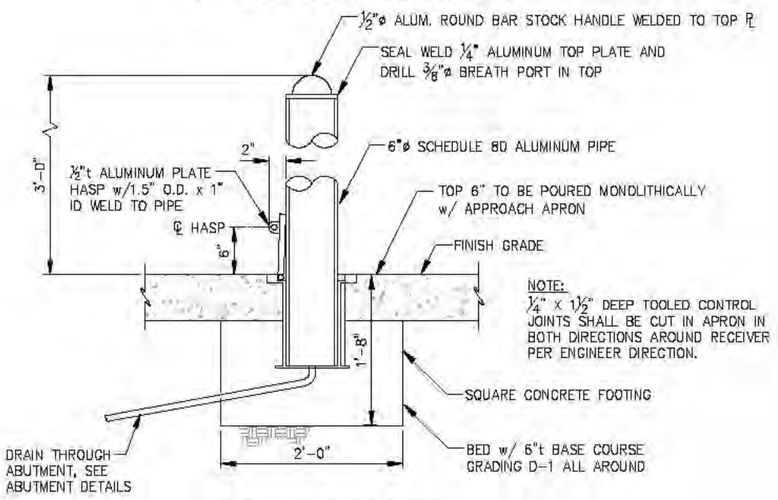

REMOVABLE BOLLARD

REVISIONS

REV.	DATE	DESCRIPTION	DWN.	CKD.	APP.

PND ENGINEERS, INC.
9360 Glacier Highway, Ste. 100
Juneau, Alaska 99801
Phone: 907-586-2093
Fax: 907-586-2099
www.pndengineers.com

DESIGN: TCB CHECKED: JLD
DRAWN: WRB APPROVED: CRS
SCALE:
DATE: 2/28/14

STATE OF ALASKA — John L. DeMuth — CE-8847 — REGISTERED PROFESSIONAL ENGINEER

CITY & BOROUGH OF JUNEAU, ALASKA
AURORA HARBOR REBUILD - PHASE I
CONTRACT NO. DH 12-160

SHEET TITLE: **UPLAND DETAILS**

PND PROJECT NO.: 122055

1.15

SHEET 15 OF 143

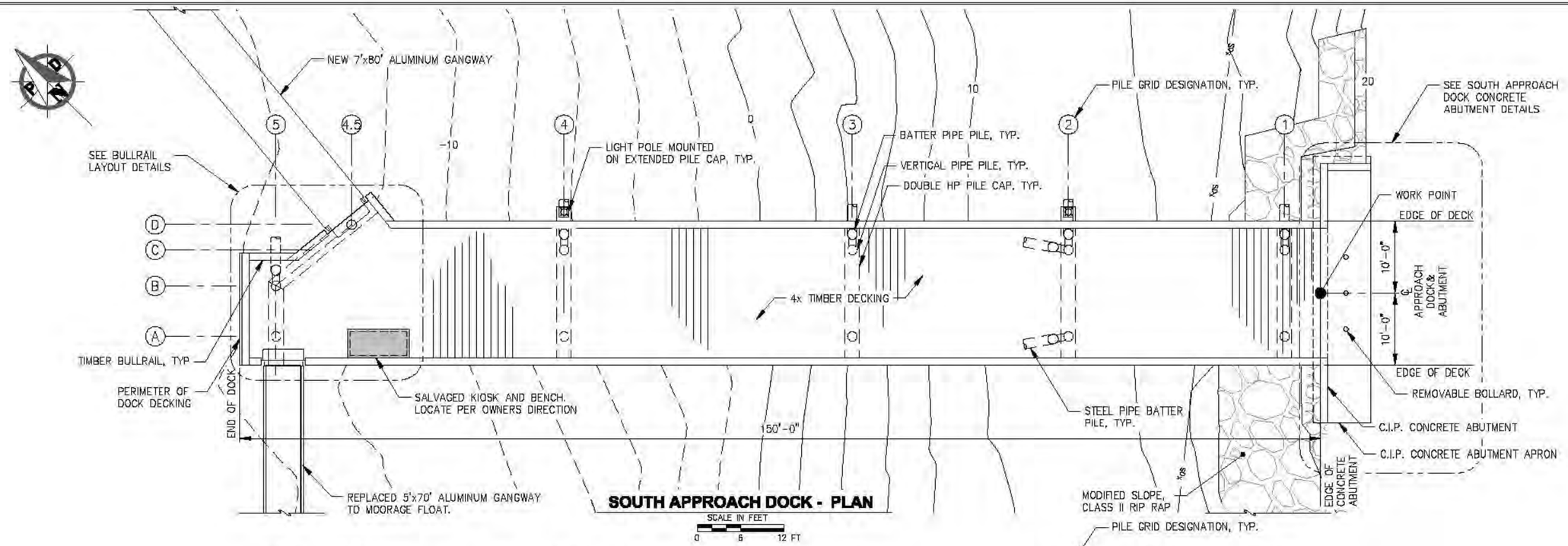

*NOTE: INSTALL TOP OF ANODE AT -5' MLLW. IN LOCATIONS WITHOUT ADEQUATE CLEAR DISTANCE BTWN -5' MLLW AND MUDLINE TO FIT ANODE (IE: MUDLINE ABOVE -11' MLLW), INSTALL ANODE 1'-0" ABOVE MUDLINE.

DESIGN CRITERIA:
DEAD LOAD: WEIGHT OF ALL MATERIALS OF CONSTRUCTION.
LIVE LOADS: 1. AASHTO H15-44 DESIGN TRUCK.
2. 100 PSF UNIFORM LIVE LOAD.

REVISIONS

REV.	DATE	DESCRIPTION	DWN.	CKD.	APP.

P N D ENGINEERS, INC.
9360 Glacier Highway, Ste. 100
Juneau, Alaska 99801
Phone: 907-586-2093
Fax: 907-586-2099
www.pndengineers.com

DESIGN: MLB CHECKED: JLD
DRAWN: KLL APPROVED: CRS
SCALE: AS SHOWN
DATE: 2/28/14

STATE OF ALASKA — John L. DeMuth — CE-8847 — REGISTERED PROFESSIONAL ENGINEER

CITY & BOROUGH OF JUNEAU, ALASKA
AURORA HARBOR REBUILD - PHASE I
CONTRACT NO. DH 12-160

SHEET TITLE:
SOUTH APPROACH DOCK PLAN AND ELEVATION

PND PROJECT NO.: 122055

2.01
SHEET 16 OF 143

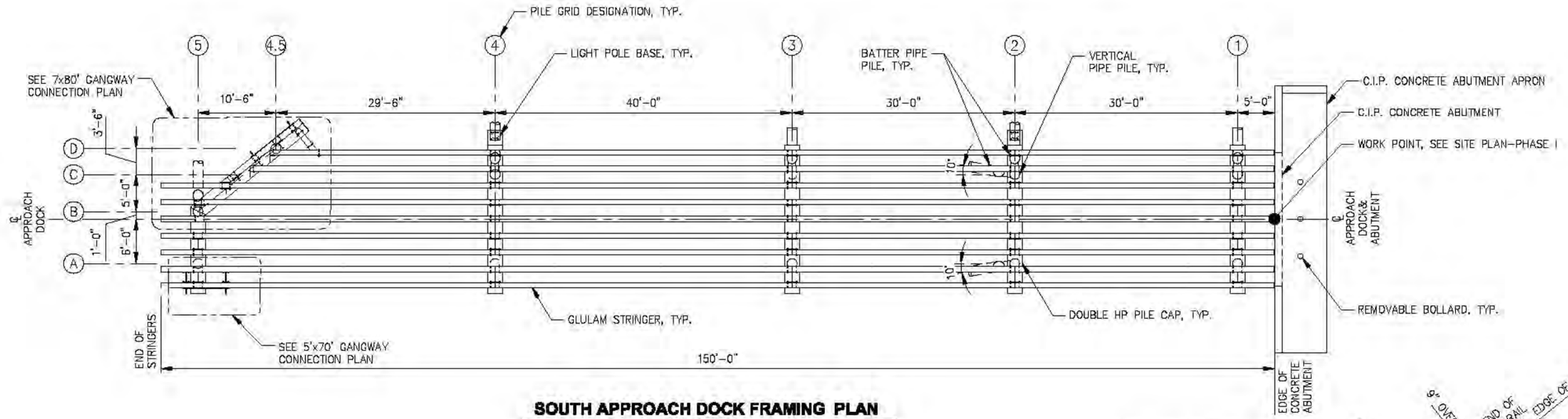

SOUTH APPROACH DOCK FRAMING PLAN

SCALE IN FEET
0 6 12 FT

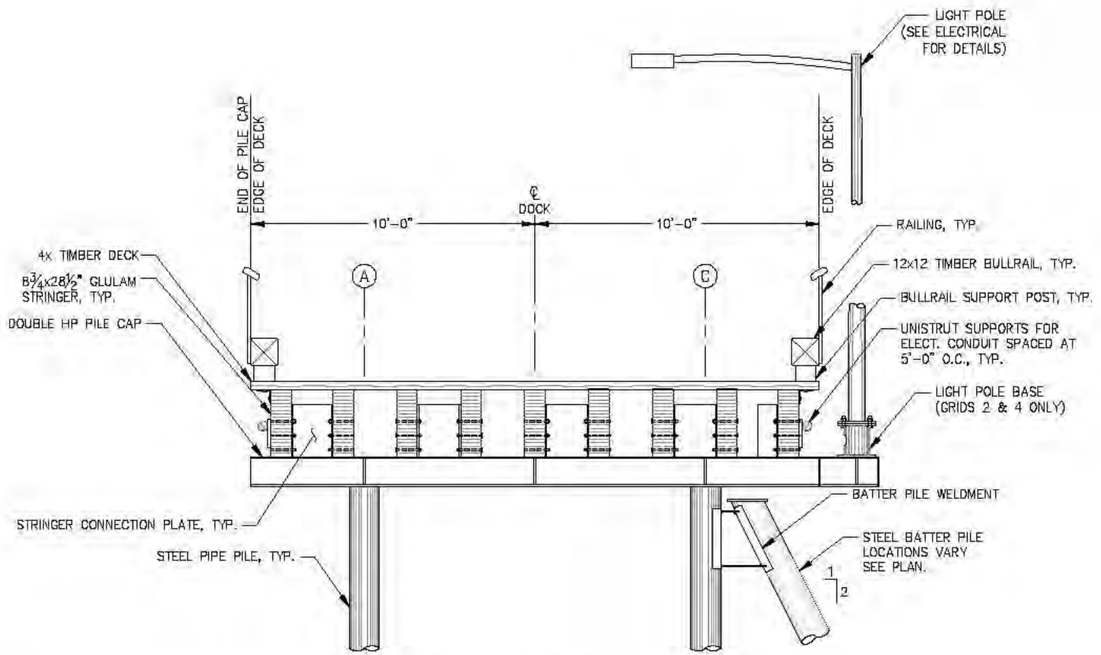

TYPICAL APPROACH DOCK SECTION

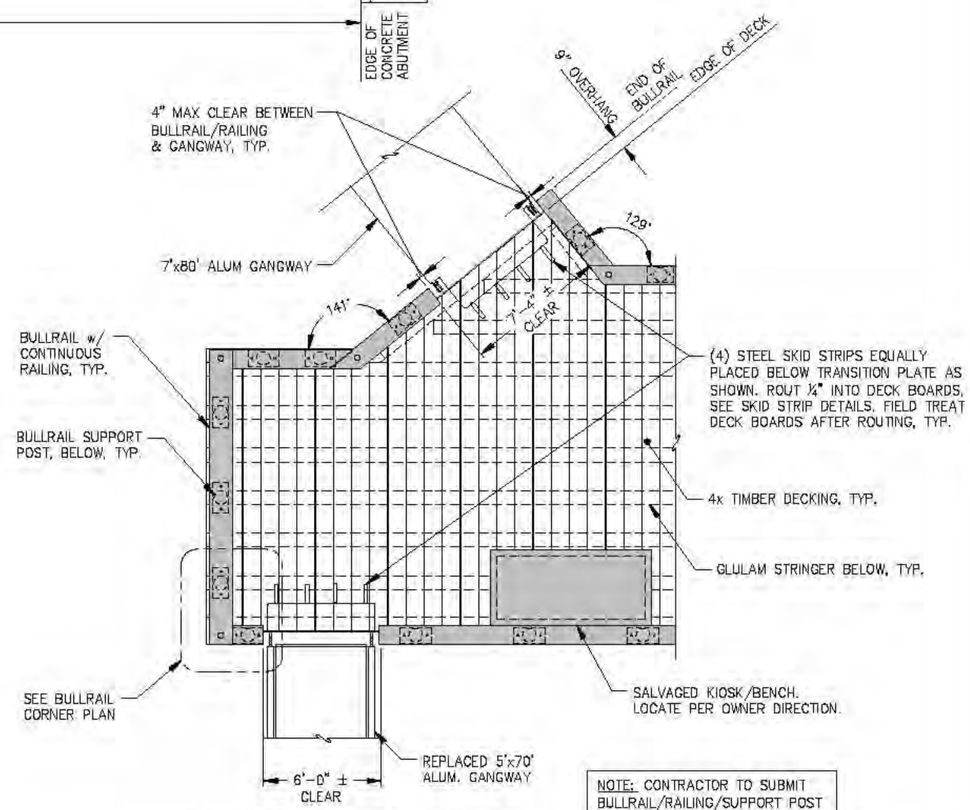

NOTE: CONTRACTOR TO SUBMIT BULLRAIL/RAILING/SUPPORT POST LAYOUT FOR ENGINEER APPROVAL.

BULLRAIL LAYOUT DETAILS

NOTE: CONTINUOUS TOP RAILING AND GANGWAY GUARDS NOT SHOWN FOR CLARITY.

REVISIONS

REV.	DATE	DESCRIPTION	DWN.	CKD.	APP.

PND ENGINEERS, INC.
9360 Glacier Highway, Ste. 100
Juneau, Alaska 99801
Phone: 907-586-2093
Fax: 907-586-2099
www.pndengineers.com

DESIGN: MLB CHECKED: JLD
DRAWN: KLL APPROVED: CRS
SCALE: AS SHOWN

STATE OF ALASKA
John L. DeMolb
CE-8847
REGISTERED PROFESSIONAL ENGINEER
DATE: 2/28/14

CITY & BOROUGH OF JUNEAU, ALASKA
AURORA HARBOR REBUILD - PHASE I
CONTRACT NO. DH 12-160

SHEET TITLE:
SOUTH APPROACH DOCK FRAMING PLAN AND SECTION

PND PROJECT NO.: 122055

2.02
SHEET 17 OF 143

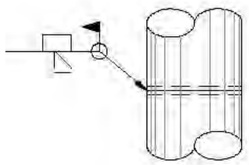

ELEVATION

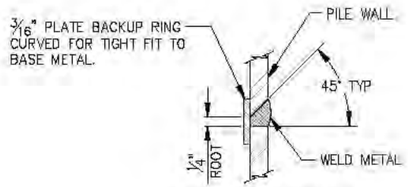

TYPICAL SECTION

TYPICAL PILE SPLICE WELD

TYPICAL FOR ALL FIELD PIPE PILE SPLICES

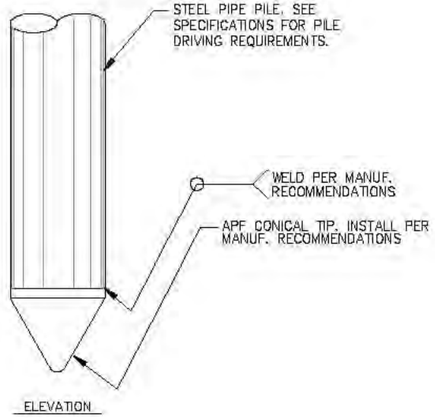

ELEVATION

TYPICAL PILE TIP

NOTE: INSTALL AT ALL LOCATIONS SHOWN IN PILE SCHEDULE

SPIN FIN® PILE IS A REGISTERED TRADEMARK OF PND ENGINEERS, INC.

SOUTH APPROACH DOCK - PILE SCHEDULE

GRID	DESIGNATION	ULTIMATE COMPRESSION LOAD (KIPS)	ULTIMATE TENSION LOAD (KIPS)	PILE DIAMETER (IN)	PILE WALL THICKNESS (IN)	REQUIRED FURNISHED LENGTH (FT)	PILE TIP
1-A	VERTICAL	80	0	16	0.500	80	CONICAL TIP
1-C(V)	VERTICAL	80	0	16	0.500	80	CONICAL TIP
1-C(B)	BATTER	25	-25	16	0.500	80	CONICAL TIP
2-A(V)	VERTICAL	145	-40	16	0.500	80	SPIN FIN®
2-A(B)	LONG. BATTER	75	-75	16	0.500	100	SPIN FIN®
2-C(V)	VERTICAL	145	-40	16	0.500	80	SPIN FIN®
2-C(B)	BATTER	35	-35	16	0.500	80	CONICAL TIP
2-C(B)	LONG. BATTER	75	-75	16	0.500	100	SPIN FIN®
3-A	VERTICAL	135	0	16	0.500	80	SPIN FIN®
3-C(V)	VERTICAL	135	0	16	0.500	80	SPIN FIN®
3-C(B)	BATTER	40	-40	16	0.500	80	CONICAL TIP
4-A	VERTICAL	155	0	16	0.500	80	SPIN FIN®
4-C(V)	VERTICAL	155	0	16	0.500	80	SPIN FIN®
4-C(B)	BATTER	45	-45	16	0.500	80	CONICAL TIP
5-A	VERTICAL	70	0	16	0.500	80	CONICAL TIP
5-B(V)	VERTICAL	60	-10	16	0.500	80	CONICAL TIP
5-B(B)	BATTER	30	-30	16	0.500	80	CONICAL TIP
5-D	VERTICAL	90	0	16	0.500	100	CONICAL TIP

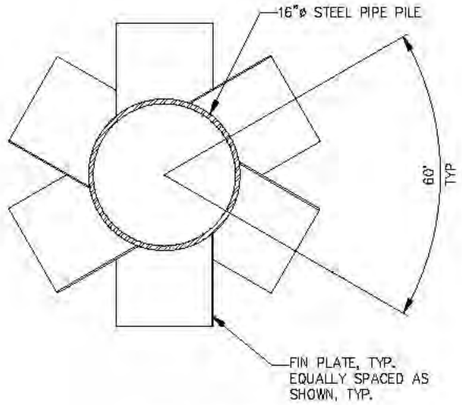

A / - SECTION

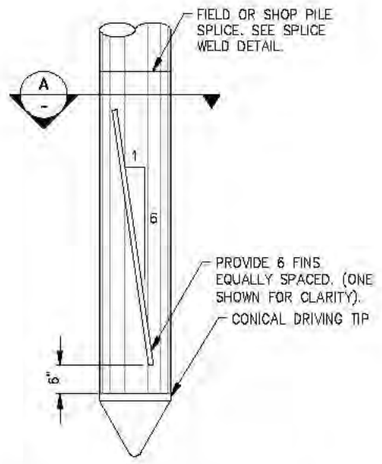

SPIN FIN® PILE - ELEVATION

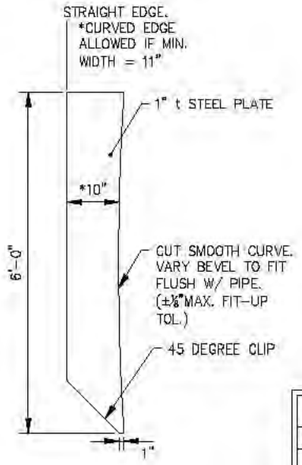

SPIN FIN DETAIL

ANODE SCHEDULE - ADDITIVE ALT B

PILE DIAMETER	DIMENSIONS	NOMINAL WT.	QUANTITY
16"ø	6"x6"x72"	260 LBS.	14

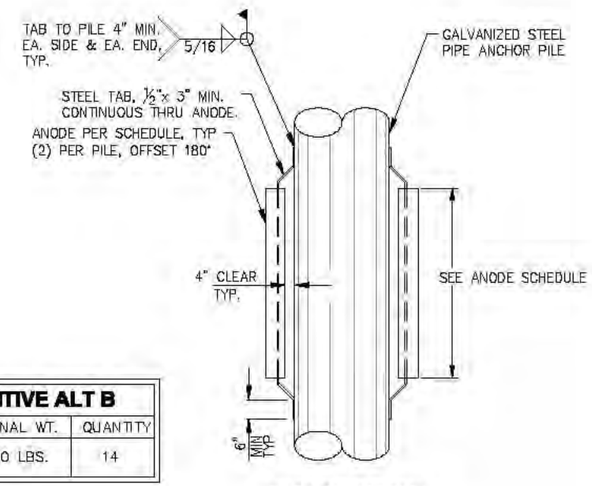

ANODE DETAIL

REVISIONS

REV.	DATE	DESCRIPTION	DWN.	CKD.	APP.

P N D ENGINEERS, INC.
9360 Glacier Highway, Ste. 100
Juneau, Alaska 99801
Phone: 907-586-2093
Fax: 907-586-2099
www.pndengineers.com

DESIGN: MLB CHECKED: JLD
DRAWN: KLL APPROVED: CRS
SCALE: NTS
DATE: 2/28/14

STATE OF ALASKA — John L. DeMuth — CE-8847 — REGISTERED PROFESSIONAL ENGINEER

CITY & BOROUGH OF JUNEAU, ALASKA
AURORA HARBOR REBUILD - PHASE I
CONTRACT NO. DH 12-160

SHEET TITLE:
SOUTH APPROACH DOCK PILE SCHEDULE AND DETAILS

PND PROJECT NO.: 122055

2.03
SHEET 16 OF 143

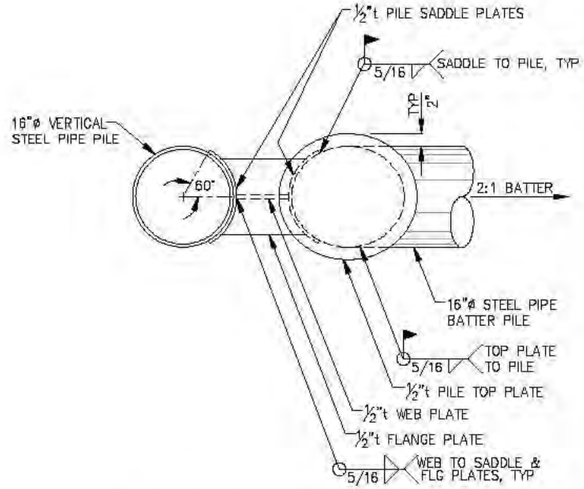

SINGLE BATTER PILE CONNECTION PLAN

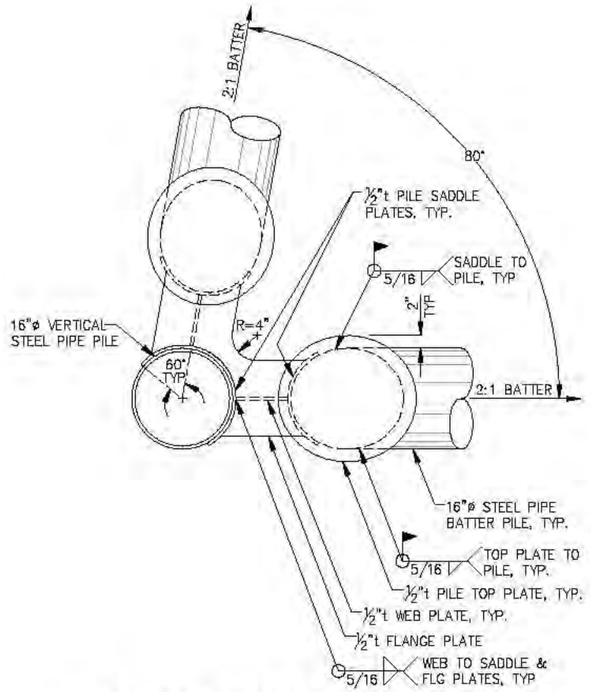

DOUBLE BATTER PILE CONNECTION PLAN

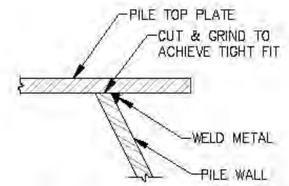

WELD PROFILE NO. 1

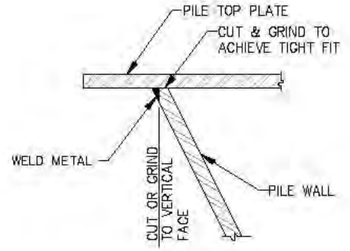

WELD PROFILE NO. 2

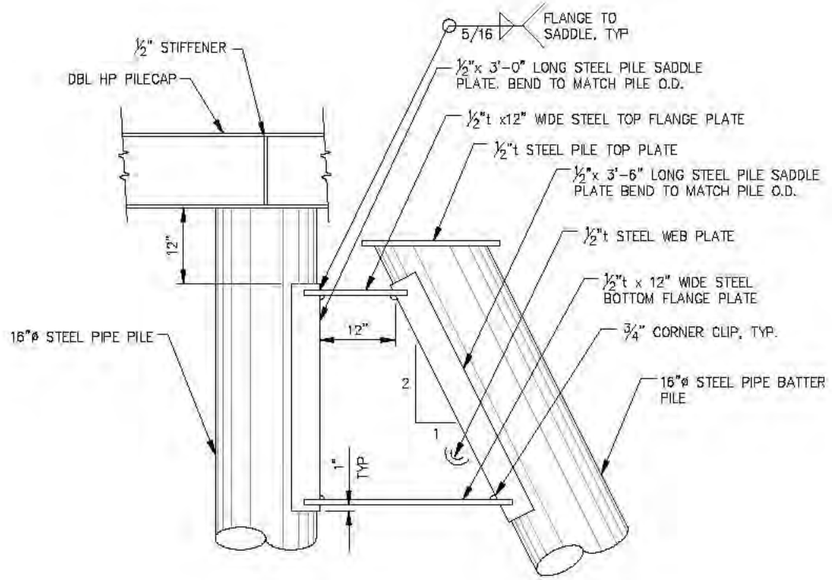

BATTER PILE WELMENT ELEVATION

NOTE:
1. SEE DOCK PLAN FOR BATTER PILE LOCATION AND ORIENTATION.
2. DETAILS ALSO APPLY TO D FLOAT APPROACH DOCK.

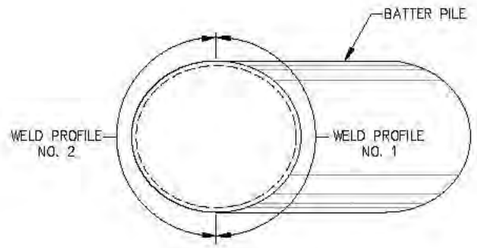

WELD PROFILES

CITY & BOROUGH OF JUNEAU DOCKS & HARBORS

REVISIONS

REV.	DATE	DESCRIPTION	DWN.	CKD.	APP.

PND ENGINEERS, INC.
9360 Glacier Highway, Ste. 100
Juneau, Alaska 99801
Phone: 907-586-2093
Fax: 907-586-2099
www.pndengineers.com

DESIGN: MLB CHECKED: JLD
DRAWN: KLL APPROVED: CRS
SCALE: NTS
DATE: 2/28/14

STATE OF ALASKA — JOHN L. DAMULA — CE-8847 — REGISTERED PROFESSIONAL ENGINEER

CITY & BOROUGH OF JUNEAU, ALASKA
AURORA HARBOR REBUILD - PHASE I
CONTRACT NO. DH 12-160

SHEET TITLE:
SOUTH APPROACH DOCK
BATTER PILE WELDMENT DETAILS

PND PROJECT NO.: 122055

2.04
SHEET 19 OF 143

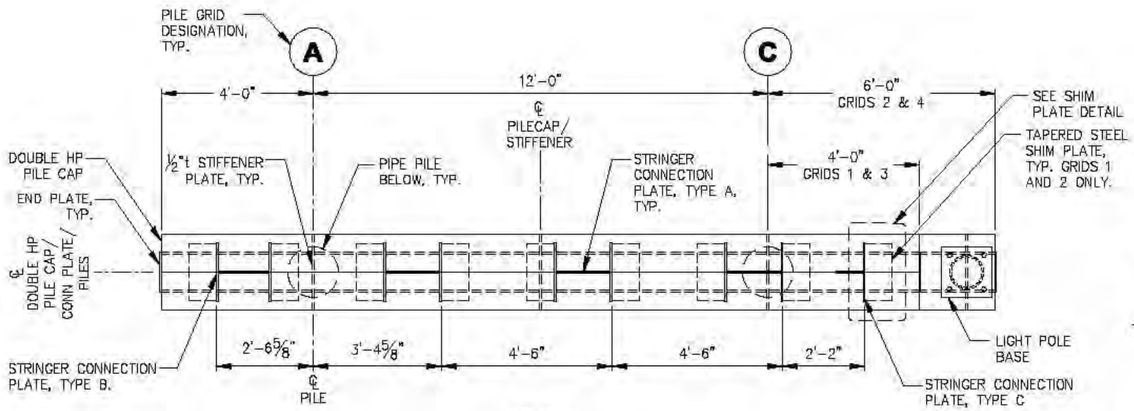

PLAN

PILE CAP AT GRIDS 1, 2, 3 & 4

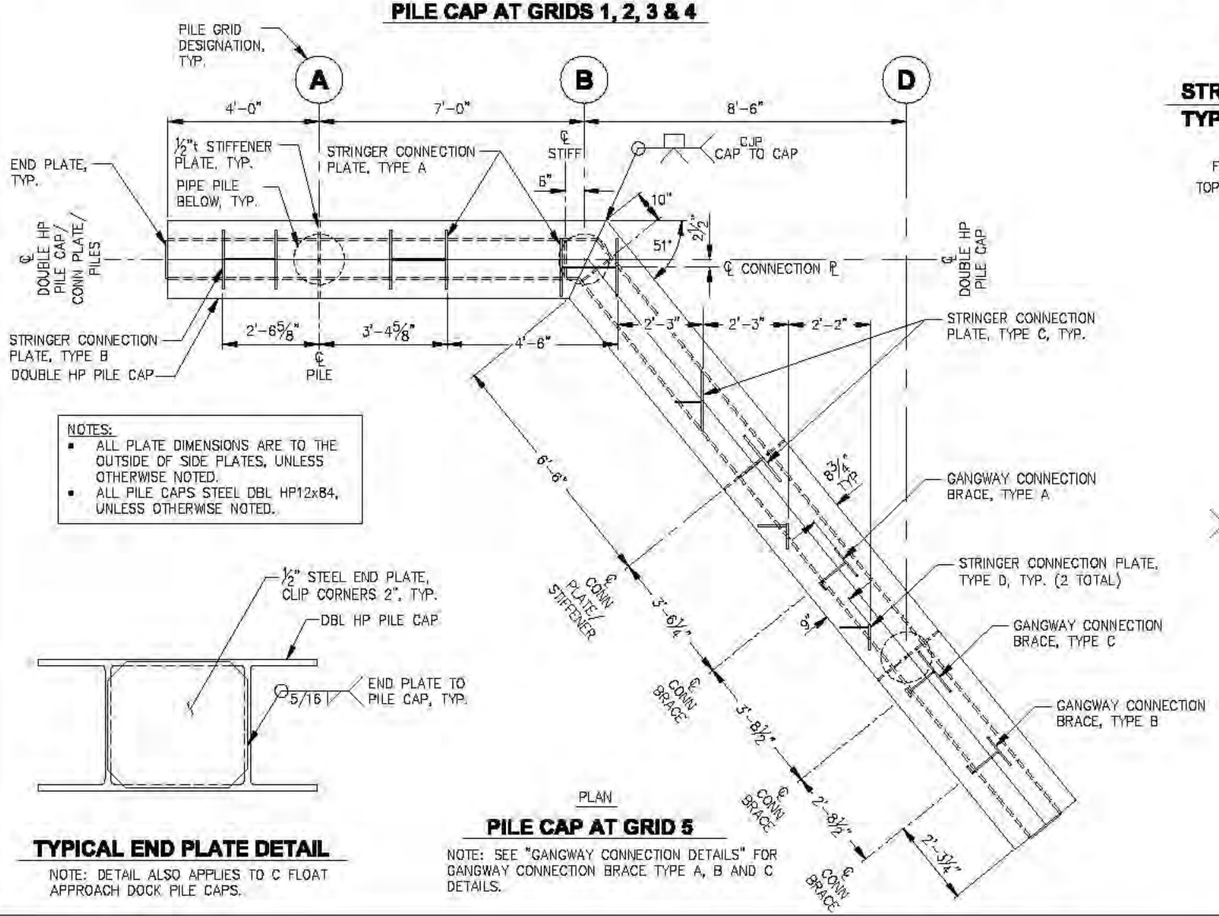

NOTES:
- ALL PLATE DIMENSIONS ARE TO THE OUTSIDE OF SIDE PLATES, UNLESS OTHERWISE NOTED.
- ALL PILE CAPS STEEL DBL HP12x84, UNLESS OTHERWISE NOTED.

PLAN

PILE CAP AT GRID 5

NOTE: SEE "GANGWAY CONNECTION DETAILS" FOR GANGWAY CONNECTION BRACE TYPE A, B AND C DETAILS.

TYPICAL END PLATE DETAIL

NOTE: DETAIL ALSO APPLIES TO C FLOAT APPROACH DOCK PILE CAPS.

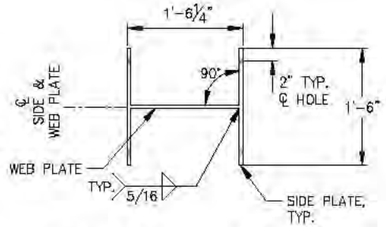

STRINGER CONNECTION PLATE TYPE A

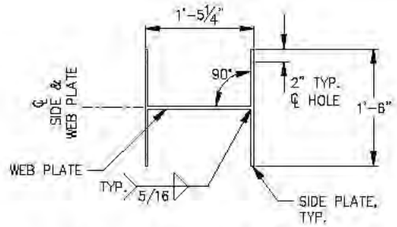

STRINGER CONNECTION PLATE TYPE B

NOTE:
ALL PLATES ½"t STEEL UNLESS NOTED OTHERWISE.

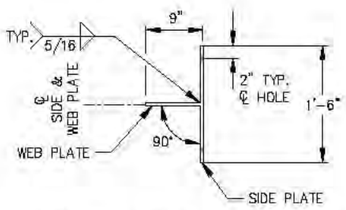

STRINGER CONNECTION PLATE TYPE C

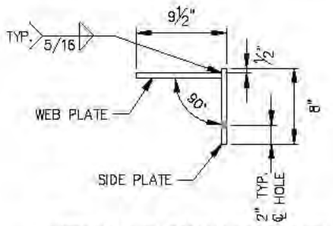

STRINGER CONNECTION PLATE TYPE D

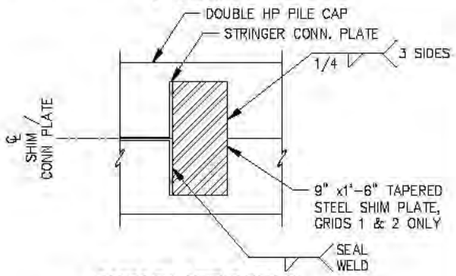

SHIM PLATE DETAIL

NOTES:
- SEE STRINGER CONNECTION DETAILS AT GRIDS 1 & 2 ON SHEET 2.06 FOR PLATE TAPER DETAILS.
- DETAIL ALSO APPLIES TO C FLOAT APPROACH DOCK PILE CAP AT BENT 1.

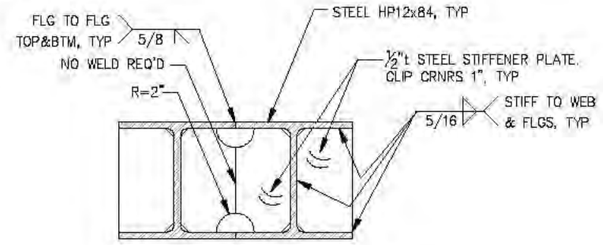

TYPICAL PILE CAP SECTION

NOTE: DETAIL ALSO APPLIES TO C FLOAT APPROACH DOCK PILE CAPS.

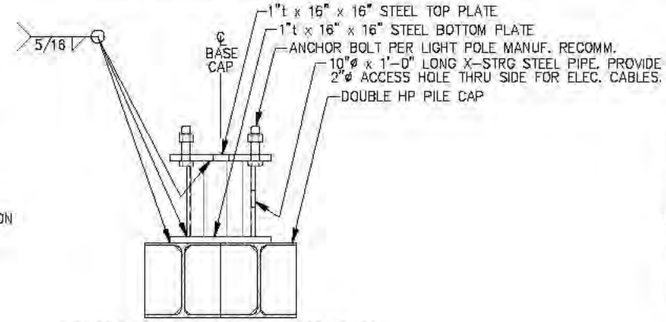

LIGHT POLE BASE ELEVATION

NOTE: DETAIL ALSO APPLIES TO C FLOAT APPROACH DOCK PILE CAPS.

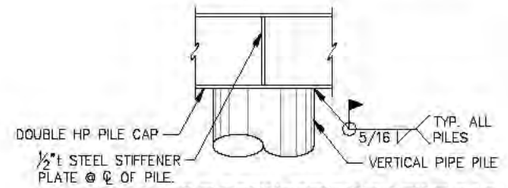

TYPICAL PILE CONNECTION TO PILE CAP

NOTES: DETAIL ALSO APPLIES TO C FLOAT APPROACH DOCK PILES

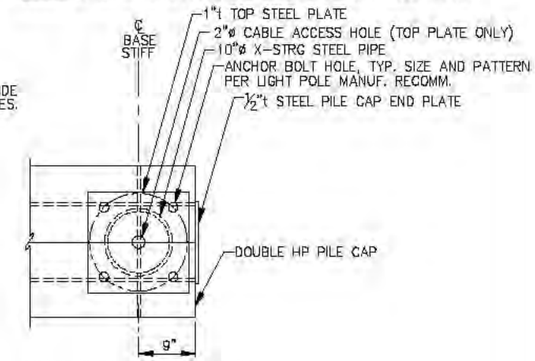

LIGHT POLE BASE PLAN

NOTE: DETAIL ALSO APPLIES TO C FLOAT APPROACH DOCK PILE CAPS.

REVISIONS

REV.	DATE	DESCRIPTION	DWN.	CKD.	APP.

P N D ENGINEERS, INC.
9360 Glacier Highway, Ste. 100
Juneau, Alaska 99801
Phone: 907-586-2093
Fax: 907-586-2099
www.pndengineers.com

DESIGN: MLB CHECKED: JLD
DRAWN: KLL APPROVED: CRS
SCALE: NTS
DATE: 2/28/14

STATE OF ALASKA — John L. Dalrymple CE-8847 — REGISTERED PROFESSIONAL ENGINEER

CITY & BOROUGH OF JUNEAU, ALASKA
AURORA HARBOR REBUILD - PHASE I
CONTRACT NO. DH 12-160

SHEET TITLE:
SOUTH APPROACH DOCK PILE CAP DETAILS

PND PROJECT NO.: 122055

2.05
SHEET 20 OF 143

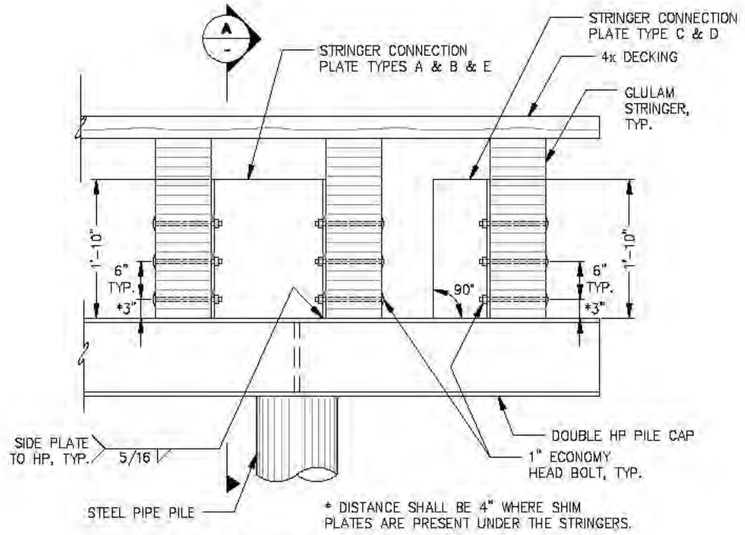

TYPICAL STRINGER CONNECTION DETAILS

NOTE: DETAIL ALSO APPLIES TO C FLOAT APPROACH DOCK. SEE C FLOAT APPROACH DOCK FOR TYPE E STRINGER CONNECTION LOCATIONS.

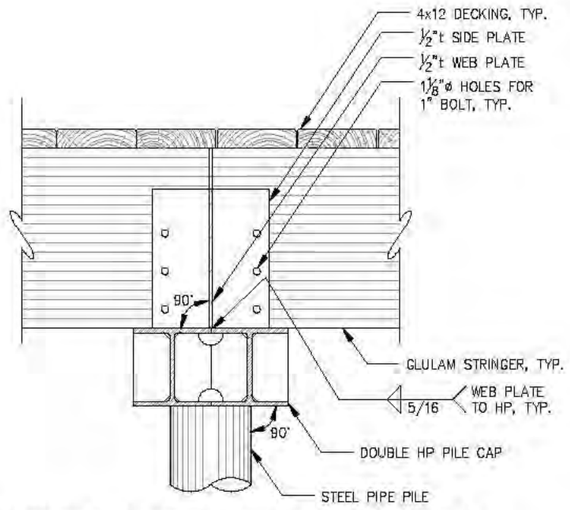

A
-
TYPICAL STRINGER CONNECTION DETAILS

NOTE: DETAIL ALSO APPLIES TO C FLOAT APPROACH DOCK.

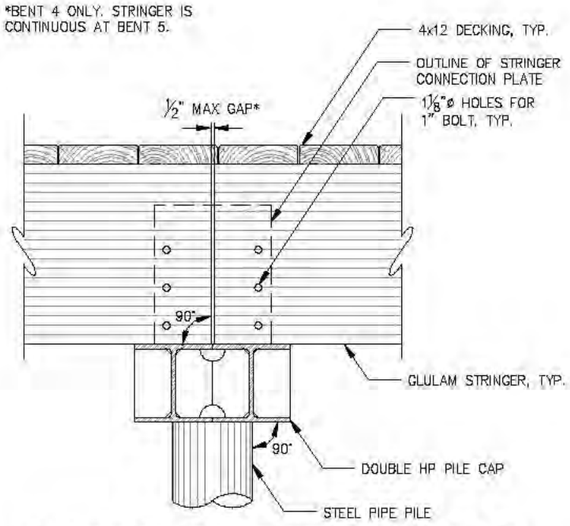

STRINGER DETAILS - SECTION AT GRIDS 4 & 5

NOTE: DETAIL ALSO APPLIES TO C FLOAT APPROACH DOCK SECTION @ GRID 3. * STRINGER IS CONTINUOUS ACROSS CAP @ GRID 3.

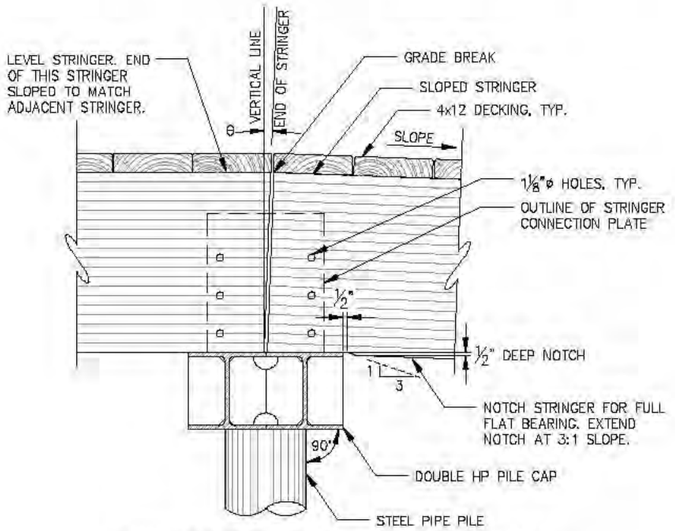

STRINGER DETAILS - SECTION AT GRID 3

NOTE: DETAIL ALSO APPLIES TO C FLOAT APPROACH DOCK SECTION @ GRID 2.

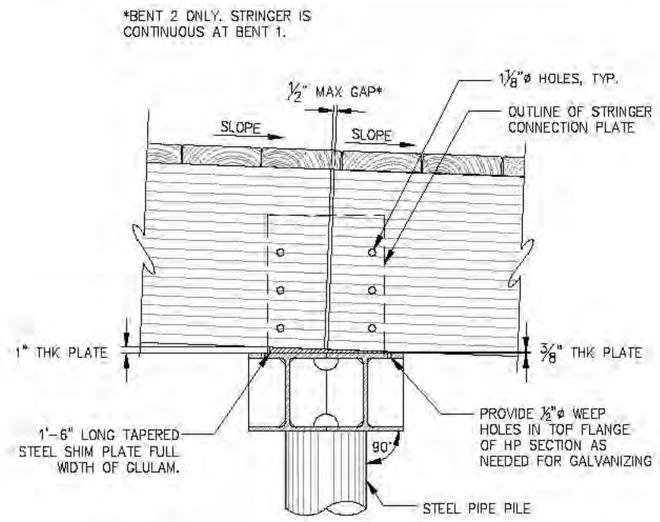

STRINGER DETAILS - SECTION AT GRIDS 1 & 2

NOTE: DETAIL ALSO APPLIES TO C FLOAT APPROACH DOCK SECTION @ GRID 1. STRINGER IS CONTINUOUS ACROSS CAP AT GRID 1.

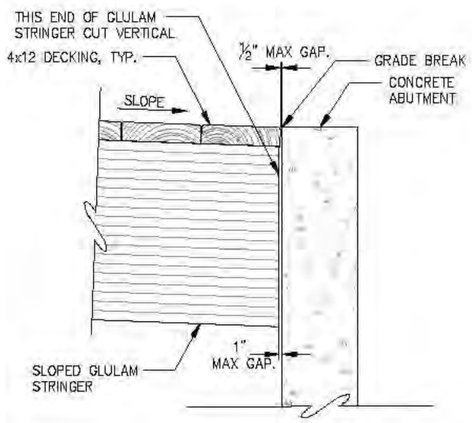

TYPICAL SECTION AT ABUTMENT STRINGER END DETAILS

NOTE: DETAIL ALSO APPLIES TO C FLOAT APPROACH DOCK SECTION @ ABUTMENT.

REVISIONS

REV.	DATE	DESCRIPTION	DWN.	CKD.	APP.

P N D ENGINEERS, INC.
9360 Glacier Highway, Ste. 100
Juneau, Alaska 99801
Phone: 907-586-2093
Fax: 907-586-2099
www.pndengineers.com

DESIGN: MLB CHECKED: JLD
DRAWN: DD APPROVED: CRS
SCALE: NTS
DATE: 2/28/14

STATE OF ALASKA — John L. DeMuth CE-8847 — REGISTERED PROFESSIONAL ENGINEER

CITY & BOROUGH OF JUNEAU, ALASKA
AURORA HARBOR REBUILD - PHASE I
CONTRACT NO. DH 12-160

SHEET TITLE:
SOUTH APPROACH DOCK
STRINGER CONNECTION DETAILS

PND PROJECT NO.: 122055

2.06
SHEET 21 OF 143

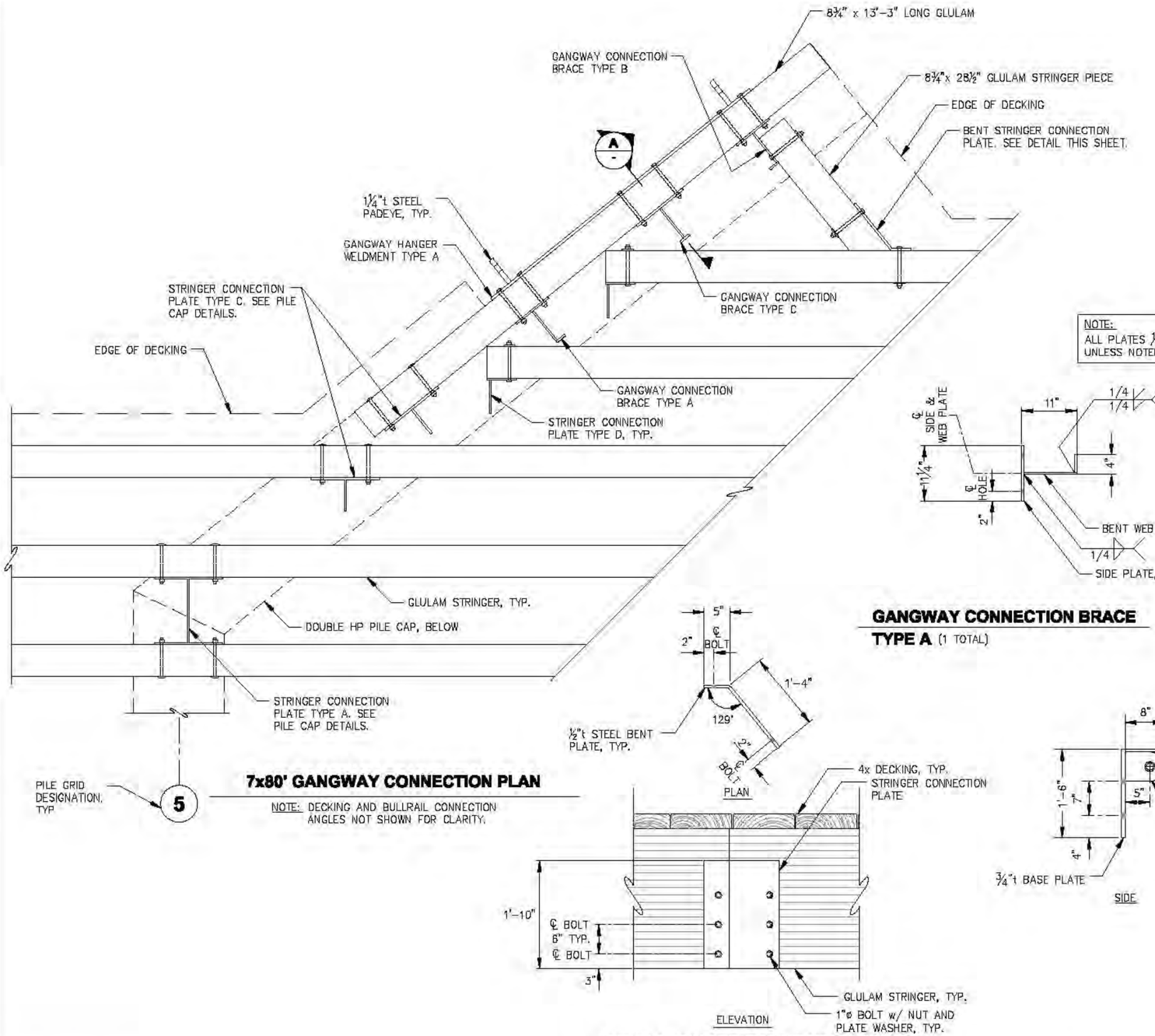

7x80' GANGWAY CONNECTION PLAN

NOTE: DECKING AND BULLRAIL CONNECTION ANGLES NOT SHOWN FOR CLARITY.

BENT STRINGER CONNECTION PLATE

(1 TOTAL)

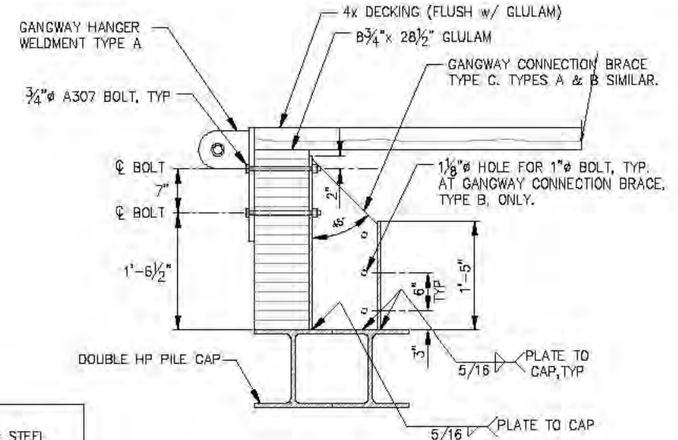

SECTION A

NOTE:
ALL PLATES ½"t STEEL UNLESS NOTED OTHERWISE.

GANGWAY CONNECTION BRACE TYPE A (1 TOTAL)

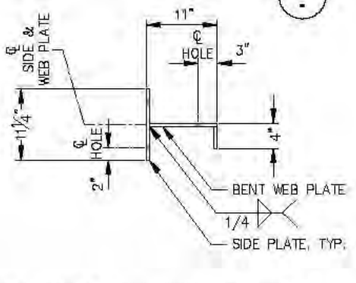

GANGWAY CONNECTION BRACE TYPE B (1 TOTAL)

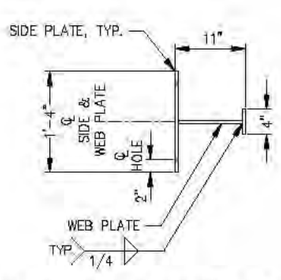

GANGWAY CONNECTION BRACE TYPE C (1 TOTAL)

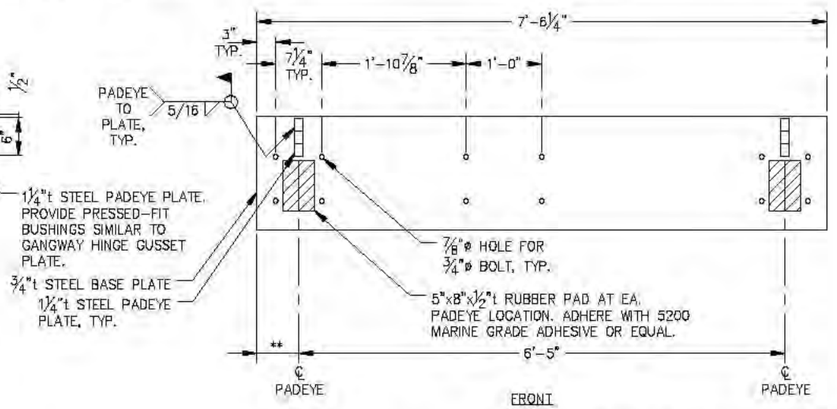

GANGWAY HANGAR WELDMENT TYPE A (1 TOTAL)

** CONTRACTOR TO FIELD VERIFY. NEW GANGWAY SHALL LINE UP PARALLEL TO NEW GANGWAY LANDING FLOAT. PADEYES MAY NEED TO BE ADJUSTED TO ACCOUNT FOR THIS ALIGNMENT.

REVISIONS

REV.	DATE	DESCRIPTION	DWN.	CKD.	APP.

P N D ENGINEERS, INC.
9360 Glacier Highway, Ste. 100
Juneau, Alaska 99801
Phone: 907-586-2093
Fax: 907-586-2099
www.pndengineers.com

DESIGN: MLB CHECKED: JLD
DRAWN: DD APPROVED: CRS
SCALE: NTS
DATE: 2/28/14

STATE OF ALASKA — John L. DeMuth — CE-8847 — REGISTERED PROFESSIONAL ENGINEER

CITY & BOROUGH OF JUNEAU, ALASKA
AURORA HARBOR REBUILD - PHASE I
CONTRACT NO. DH 12-160

SHEET TITLE:
SOUTH APPROACH DOCK GANGWAY CONNECTION DETAILS

PND PROJECT NO.: 122055

2.07
SHEET 22 OF 143

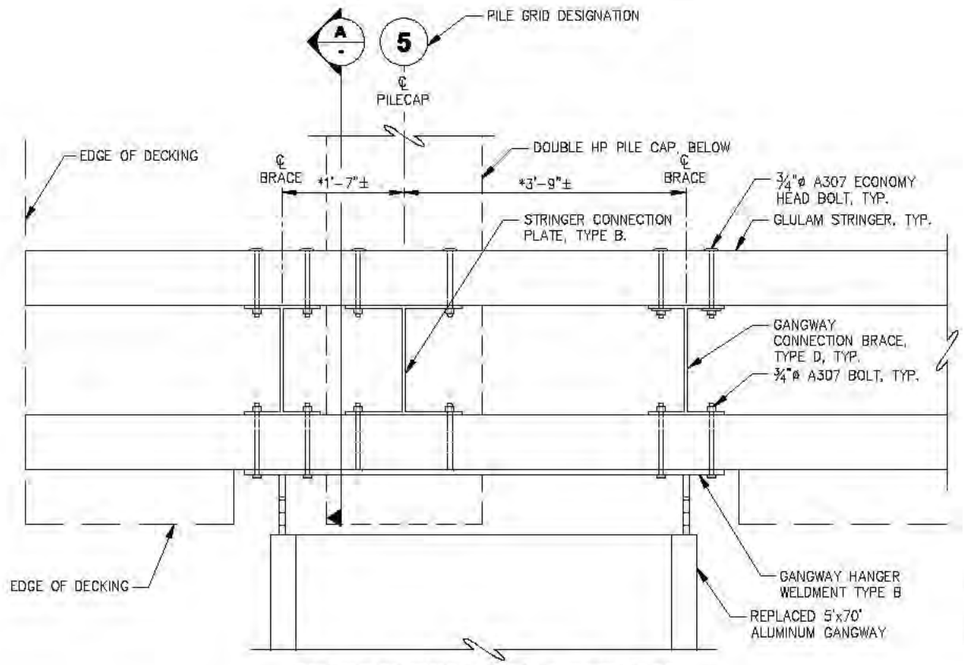

5'x70' GANGWAY CONNECTION PLAN

NOTE: DECKING NOT SHOWN FOR CLARITY.

* CONTRACTOR TO FIELD VERIFY GANGWAY SHALL LINE UP PARALLEL TO EXISTING GANGWAY GUIDES ON MOORAGE FLOAT.

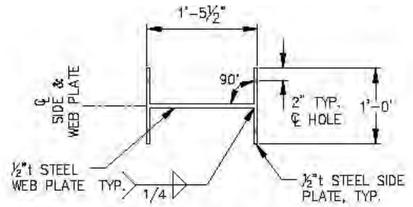

GANGWAY CONNECTION BRACE TYPE D (2 TOTAL)

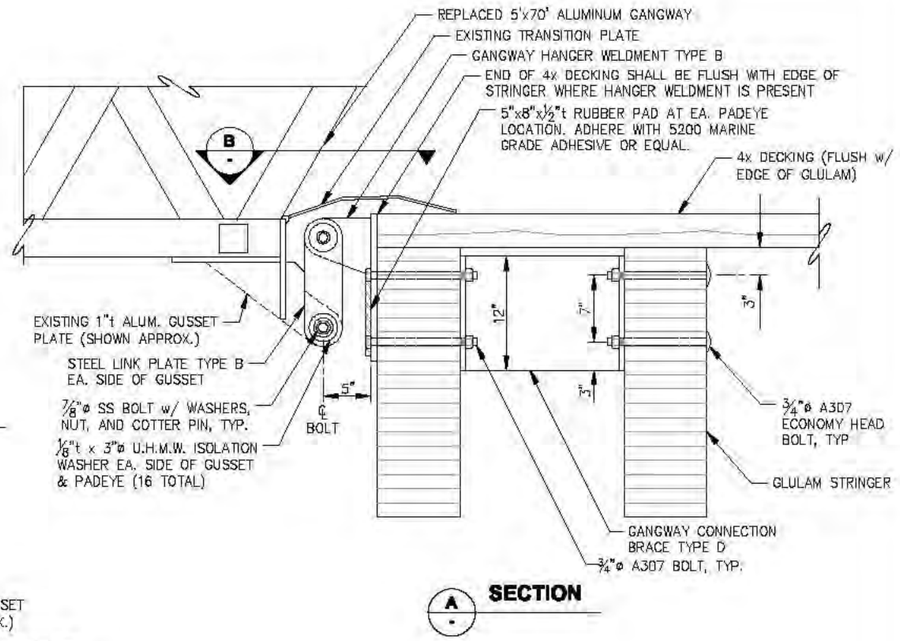

A SECTION

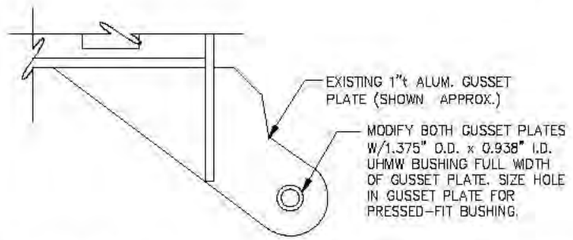

EXISTING ALUMINUM GUSSET PLATE MODIFICATIONS

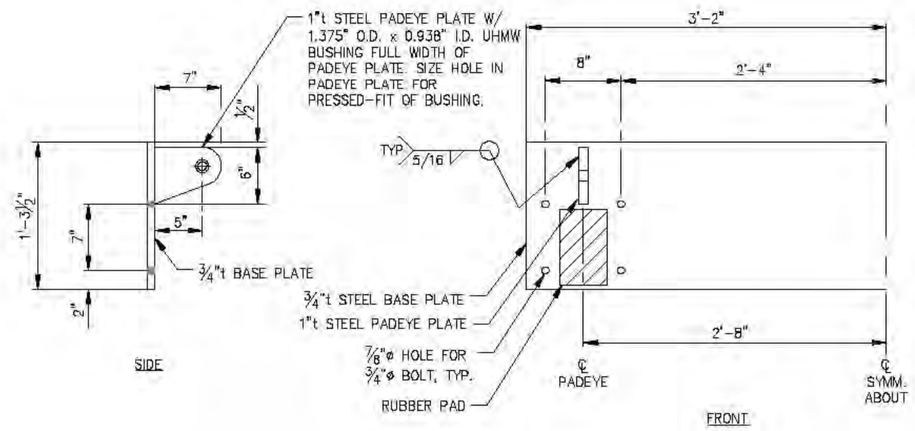

GANGWAY HANGER WELDMENT TYPE B (1 TOTAL)

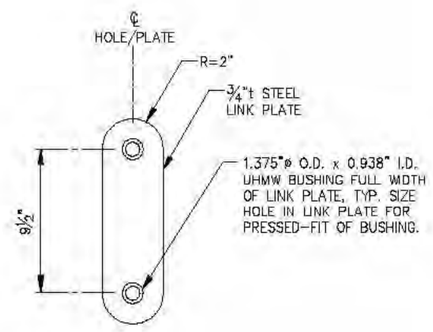

LINK PLATE TYPE B (4 TOTAL)

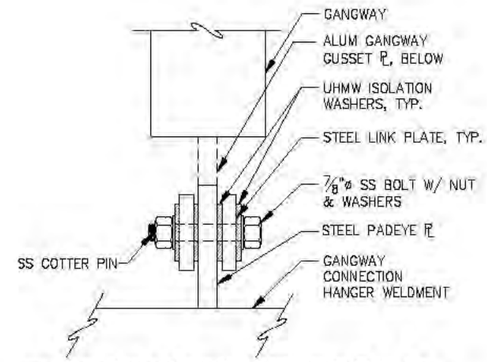

B GANGWAY HINGE ASSEMBLY PLAN

REVISIONS

REV.	DATE	DESCRIPTION	DWN.	CKD.	APP.

PND ENGINEERS, INC.
9360 Glacier Highway, Ste. 100
Juneau, Alaska 99801
Phone: 907-586-2093
Fax: 907-586-2099
www.pndengineers.com

DESIGN: MLB CHECKED: JLD
DRAWN: DD APPROVED: CRS
SCALE: NTS
DATE: 2/28/14

STATE OF ALASKA — John L. DeMuth CE-8847 — REGISTERED PROFESSIONAL ENGINEER

CITY & BOROUGH OF JUNEAU, ALASKA
AURORA HARBOR REBUILD - PHASE I
CONTRACT NO. DH 12-160

SHEET TITLE:
SOUTH APPROACH DOCK
GANGWAY CONNECTION DETAILS

PND PROJECT NO.: 122055

2.08
SHEET 23 OF 143

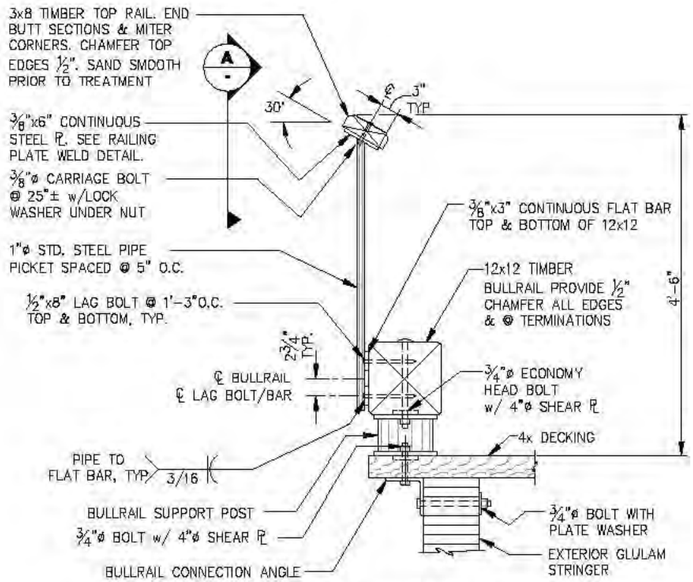

TYPICAL BULLRAIL/ RAILING DETAIL

NOTE:
LOCATE BULLRAIL POSTS TO AVOID CONFLICT w/ HANDRAIL LAG BOLTS.

NOTE:
RAILING NOT SHOWN FOR CLARITY.

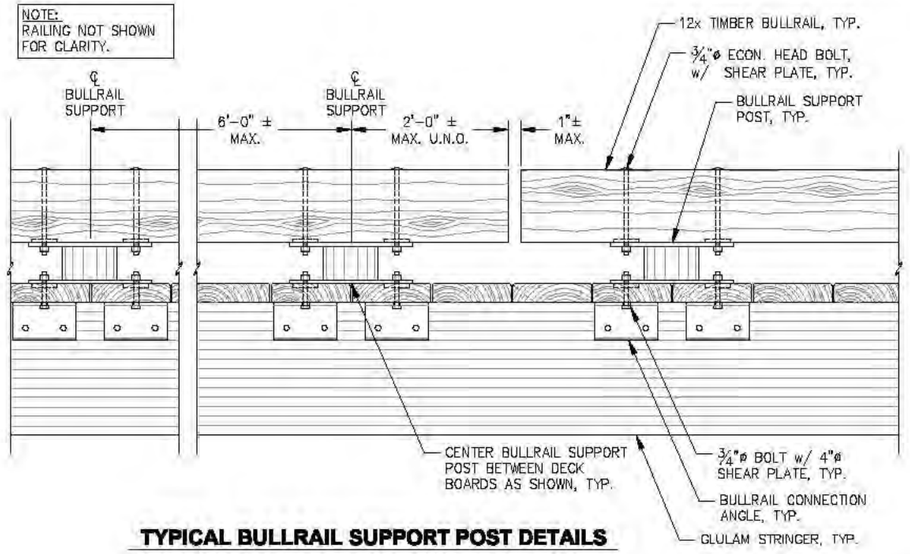

TYPICAL BULLRAIL SUPPORT POST DETAILS

NOTE:
ALL DETAILS THIS SHEET ALSO APPLY TO C FLOAT APPROACH DOCK

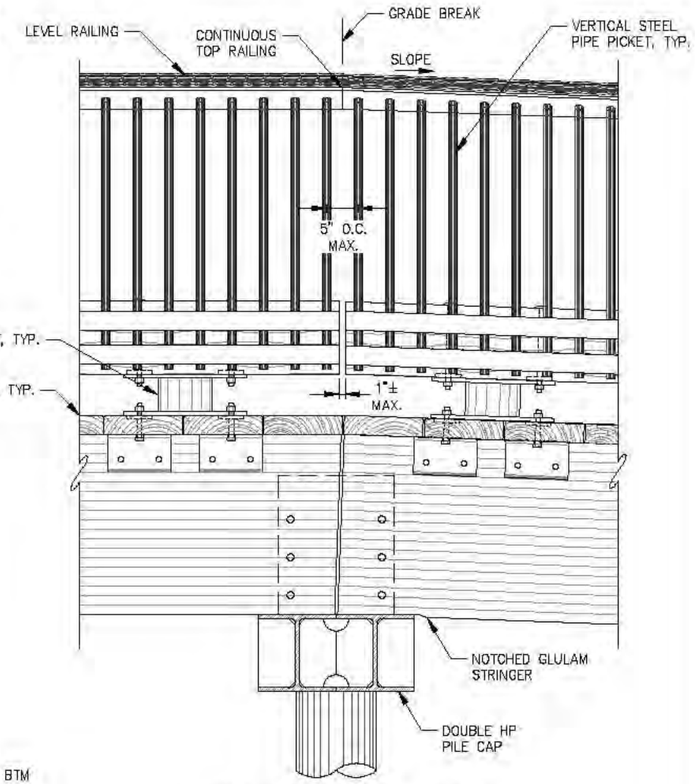

RAILING AT GRADE BREAK

NOTE: RAILING PLATE SHALL BE WELDED TO CREATE A CONTINUOUS RAIL ALONG ALL STRAIGHT LENGTHS AND ALL CORNERS, U.N.O.

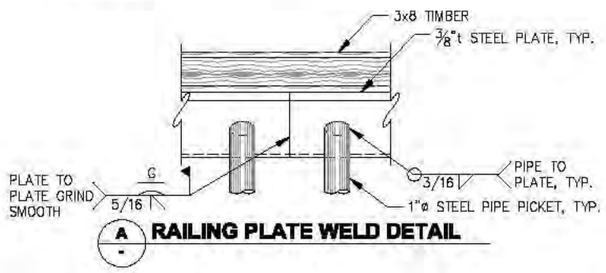

A **RAILING PLATE WELD DETAIL**

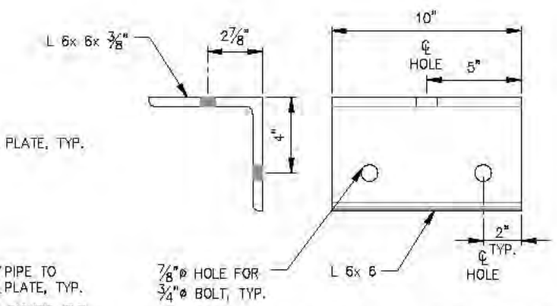

TYPICAL BULLRAIL CONNECTION ANGLE

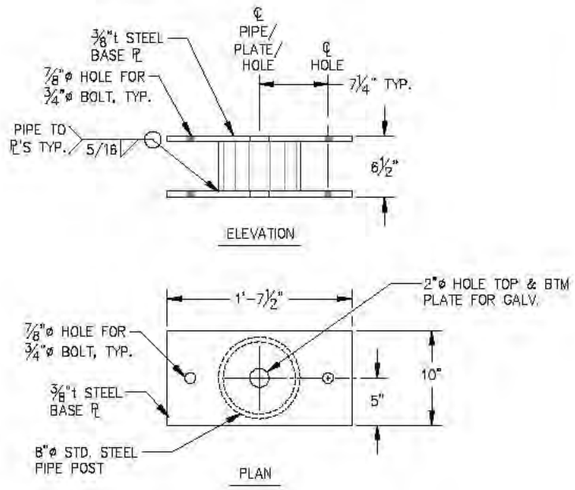

TYPICAL BULLRAIL SUPPORT POST

REVISIONS

REV.	DATE	DESCRIPTION	DWN.	CKD.	APP.

PND ENGINEERS, INC.
9360 Glacier Highway, Ste. 100
Juneau, Alaska 99801
Phone: 907-586-2093
Fax: 907-586-2099
www.pndengineers.com

DESIGN: MLB CHECKED: JLD
DRAWN: KLL APPROVED: CRS
SCALE: NTS
DATE: 2/28/14

CITY & BOROUGH OF JUNEAU, ALASKA
AURORA HARBOR REBUILD - PHASE I
CONTRACT NO. DH 12-160

SHEET TITLE:
SOUTH APPROACH DOCK BULLRAIL AND RAILING DETAILS

PND PROJECT NO.: 122055

2.09
SHEET 24 OF 143

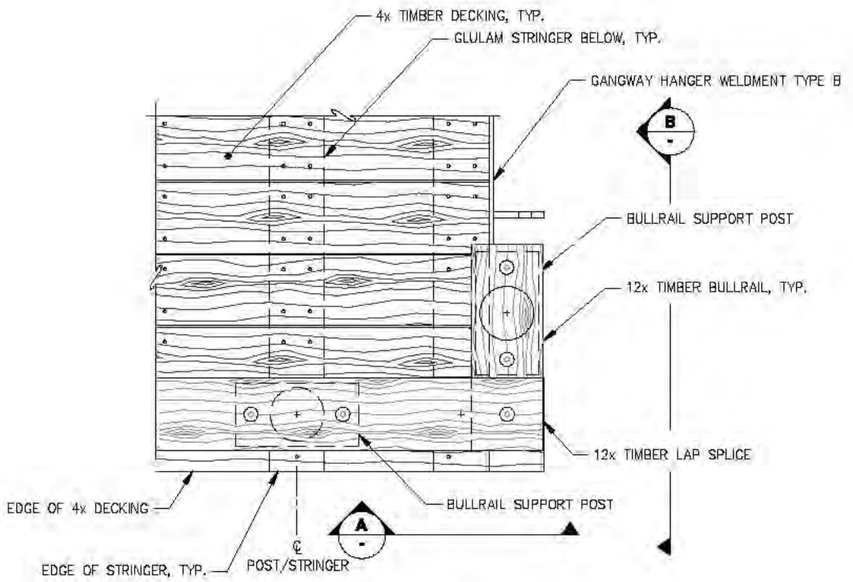

BULLRAIL CORNER PLAN

NOTE: RAILING NOT SHOWN FOR CLARITY.

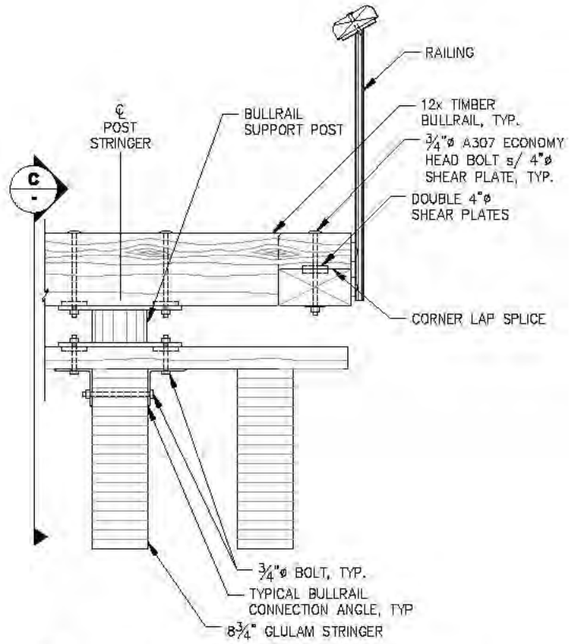

A **BULLRAIL CORNER END ELEVATION**

NOTE: DETAIL ALSO APPLIES TO C-FLOAT APPROACH DOCK.

NOTE: PARTIAL RAILING ONLY SHOWN FOR CLARITY.

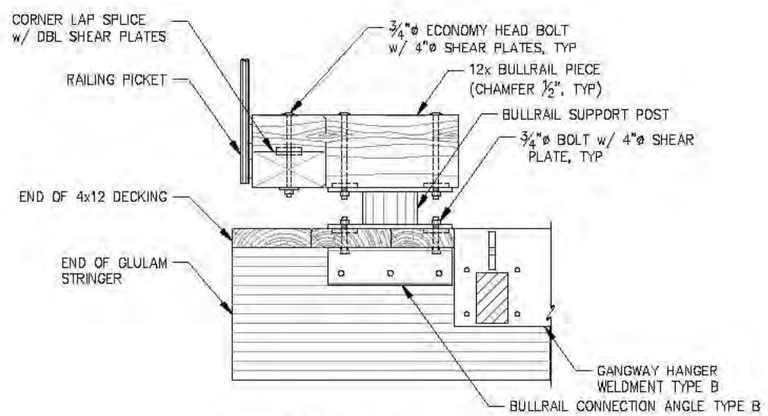

B **BULLRAIL CORNER SIDE ELEVATION**

NOTE: PARTIAL RAILING ONLY SHOWN FOR CLARITY.

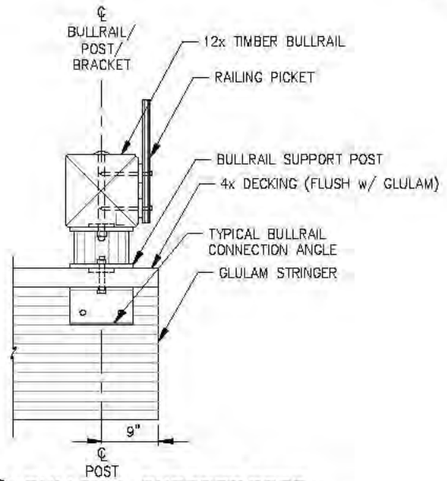

C **BULLRAIL SUPPORT POST CONNECTION**

NOTE: DETAIL ALSO APPLIES TO C-FLOAT APPROACH DOCK.

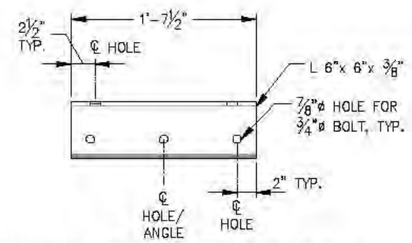

BULLRAIL CONNECTION BRACKET TYPE B (1 TOTAL)

NOTE: ALL DETAILS NOT SHOWN SIMILAR TO TYPICAL BULLRAIL CONNECTION BRACKET

REVISIONS

REV.	DATE	DESCRIPTION	DWN.	CKD.	APP.

PND ENGINEERS, INC.
9360 Glacier Highway, Ste. 100
Juneau, Alaska 99801
Phone: 907-586-2093
Fax: 907-586-2099
www.pndengineers.com

DESIGN: MLB CHECKED: JLD
DRAWN: KLL APPROVED: CRS
SCALE: NTS
DATE: 2/28/14

CITY & BOROUGH OF JUNEAU, ALASKA
AURORA HARBOR REBUILD - PHASE I
CONTRACT NO. DH 12-160

SHEET TITLE:
SOUTH APPROACH DOCK BULLRAIL AND RAILING DETAILS

PND PROJECT NO.: 122055

2.10
SHEET 25 OF 143

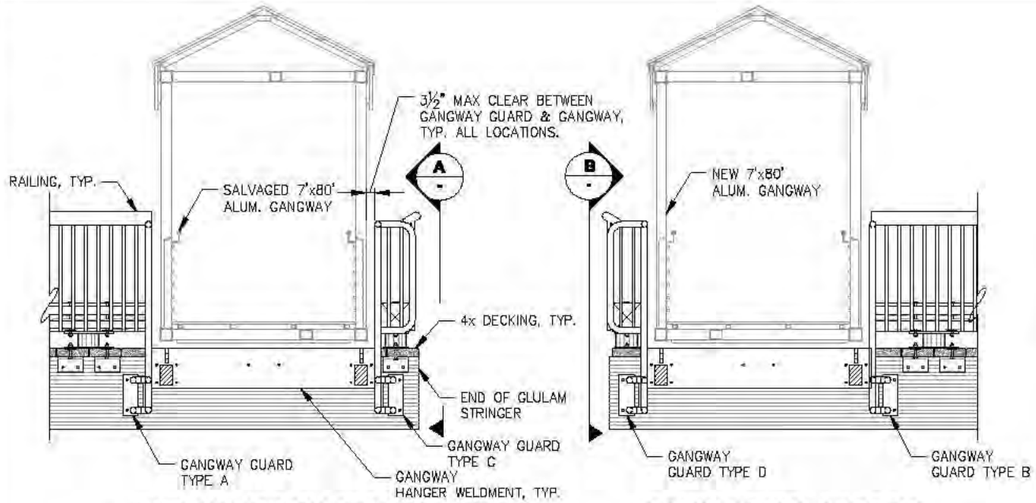

C-FLOAT APPROACH DOCK
7'x80'GANGWAY GUARD LAYOUT

SOUTH APPROACH DOCK
7'x80' GANGWAY GUARD LAYOUT

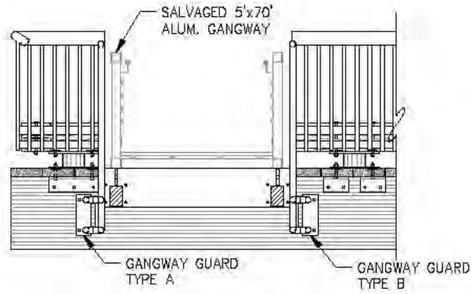

SOUTH APPROACH DOCK
5'x70' GANGWAY GUARD LAYOUT

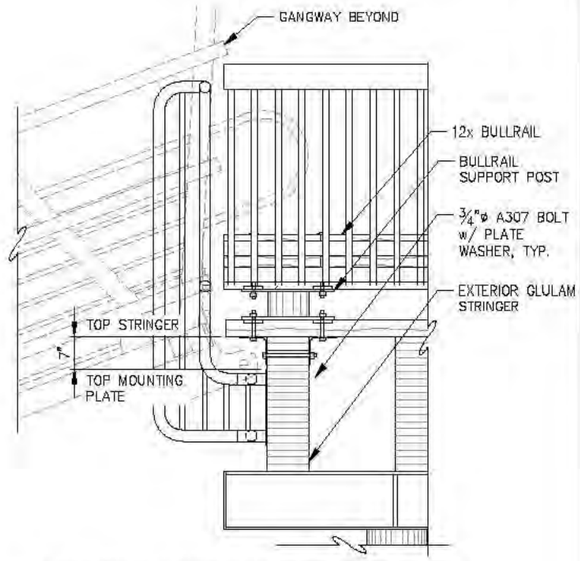

A GANGWAY GUARD TYPE C- ELEVATION

NOTE:
GANGWAY GUARDS TYPE A&B MOUNT SIMILAR

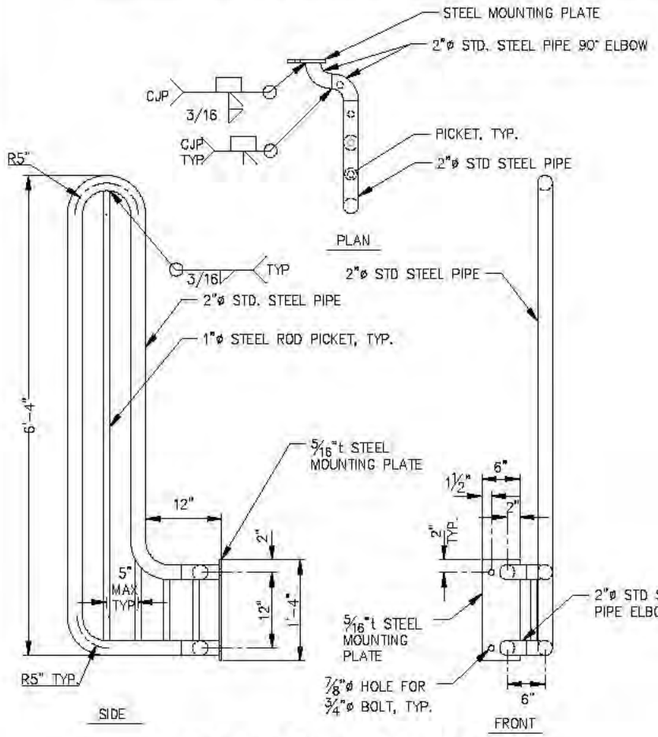

GANGWAY GUARD TYPE A (2 TOTAL)

NOTE: GANGWAY GUARD TYPE B OPPOSITE HAND (2 TOTAL)

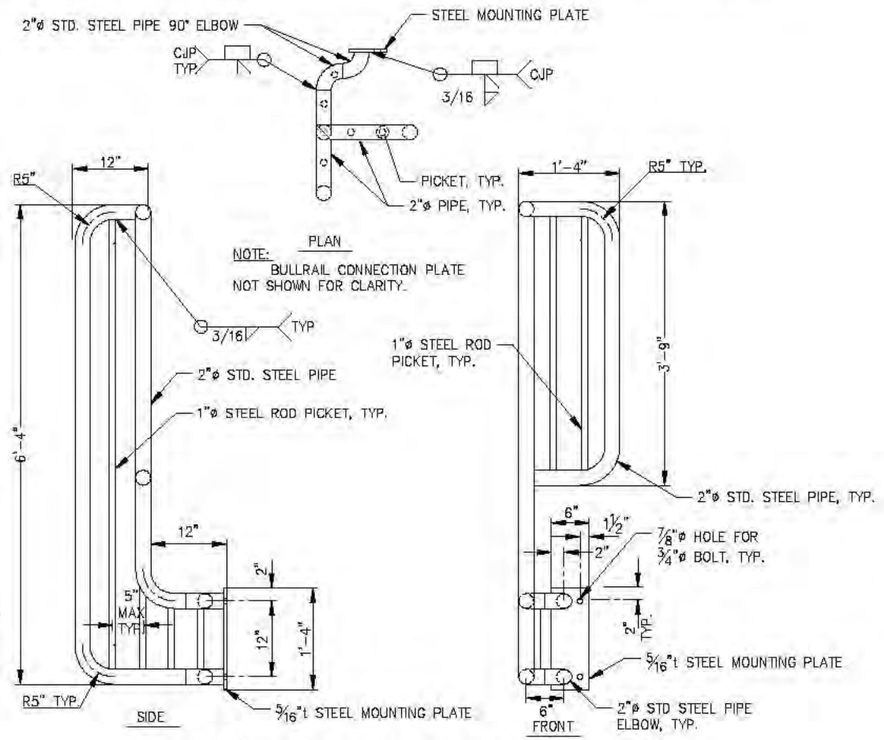

GANGWAY GUARD TYPE C (1 TOTAL)

NOTE: GANGWAY GUARD TYPE D OPPOSITE HAND (1 TOTAL)

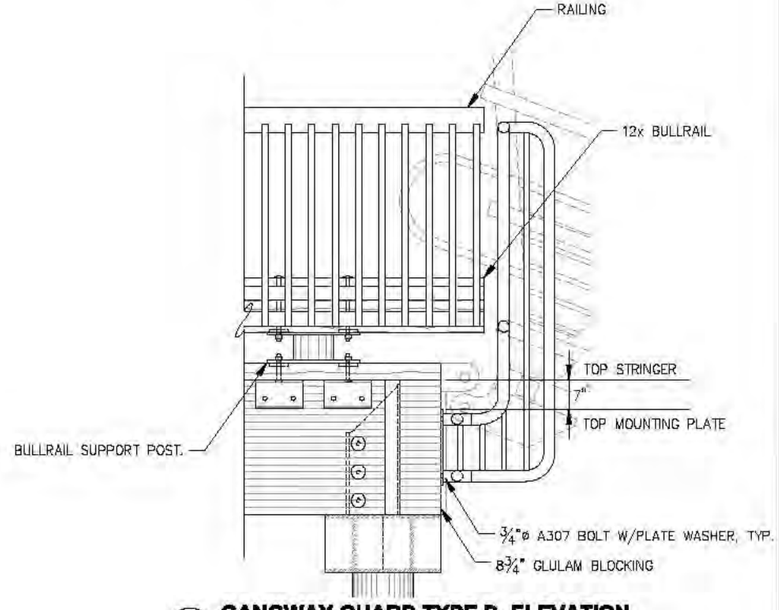

B GANGWAY GUARD TYPE D- ELEVATION

REVISIONS

REV.	DATE	DESCRIPTION	DWN.	CKD.	APP.

P N D ENGINEERS, INC.

9360 Glacier Highway, Ste. 100
Juneau, Alaska 99801
Phone: 907-586-2093
Fax: 907-586-2099
www.pndengineers.com

DESIGN: MLB CHECKED: JLD
DRAWN: KLL APPROVED: CRS
SCALE:

STATE OF ALASKA — John L. DeMuth — CE-8847 — REGISTERED PROFESSIONAL ENGINEER
DATE: 2/28/14

CITY & BOROUGH OF JUNEAU, ALASKA
AURORA HARBOR REBUILD - PHASE I
CONTRACT NO. DH 12-160

SHEET TITLE:
GANGWAY GUARD DETAILS

PND PROJECT NO.: 122055

2.11
SHEET 26 OF 143

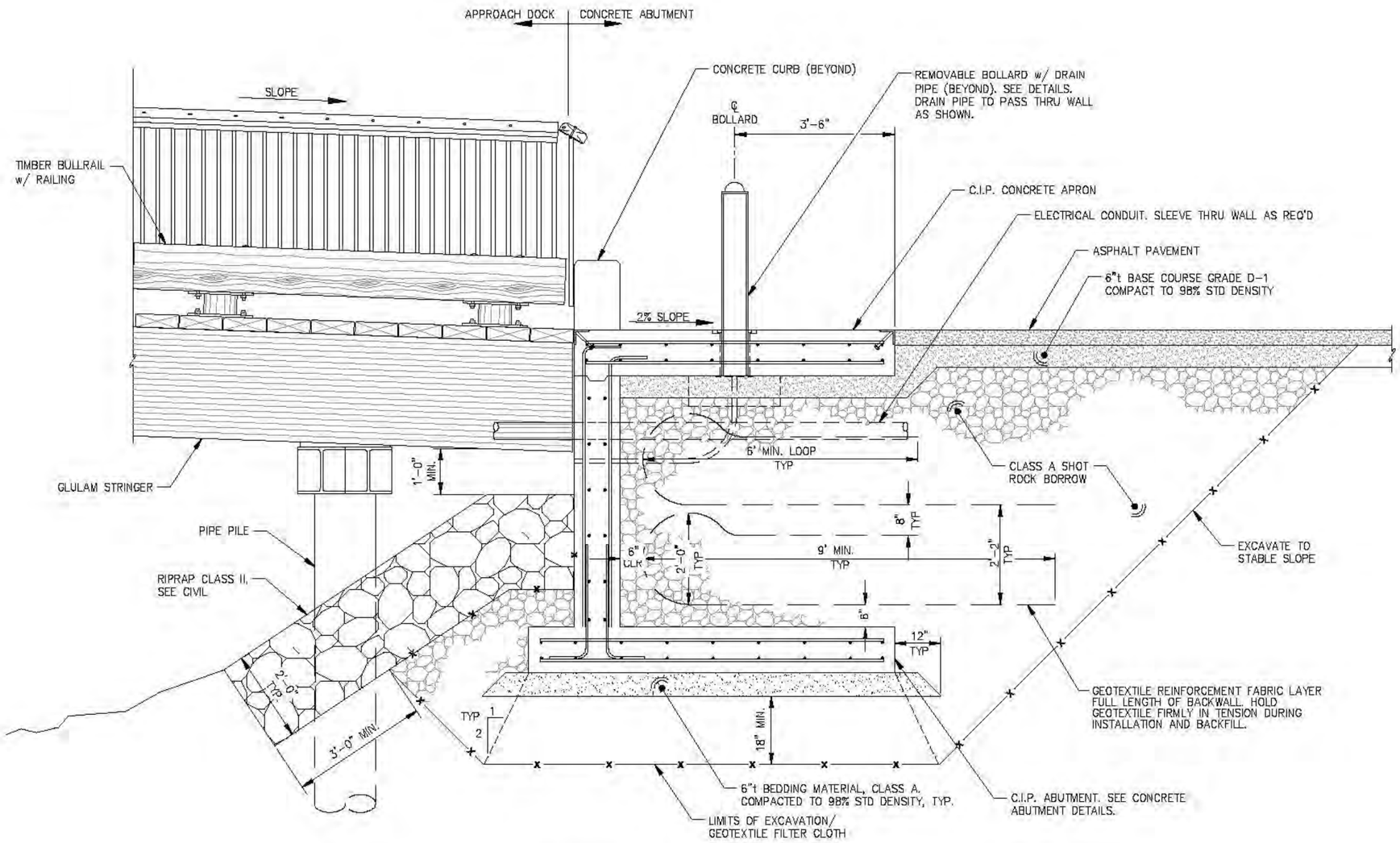

CONCRETE ABUTMENT SECTION

NOTE: DETAIL AT C-FLOAT APPROACH DOCK ABUTMENT SIMILAR.

REVISIONS

REV.	DATE	DESCRIPTION	DWN.	CKD.	APP.

PND ENGINEERS, INC.
9360 Glacier Highway, Ste. 100
Juneau, Alaska 99801
Phone: 907-586-2093
Fax: 907-586-2099
www.pndengineers.com

DESIGN: MLB CHECKED: JLD
DRAWN: KLL APPROVED: CRS
SCALE: NTS
DATE: 2/28/14

STATE OF ALASKA — John L. DeMoth CE-8847 — REGISTERED PROFESSIONAL ENGINEER

CITY & BOROUGH OF JUNEAU, ALASKA
AURORA HARBOR REBUILD - PHASE I
CONTRACT NO. DH 12-160

SHEET TITLE:
SOUTH APPROACH DOCK CONCRETE ABUTMENT SECTION

PND PROJECT NO.: 122055

2.12
SHEET 27 OF 143

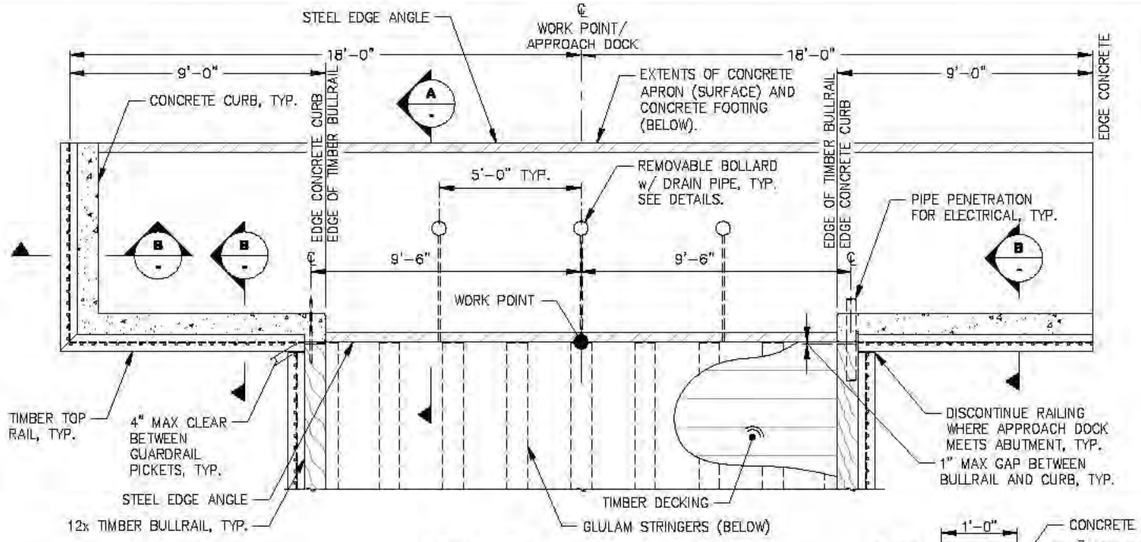

CONCRETE ABUTMENT PLAN

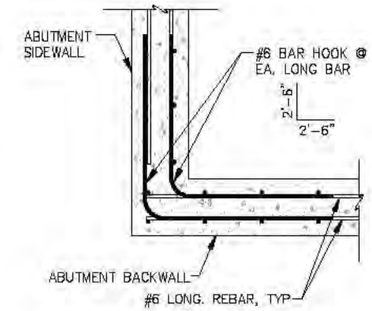

CORNER REBAR PLAN

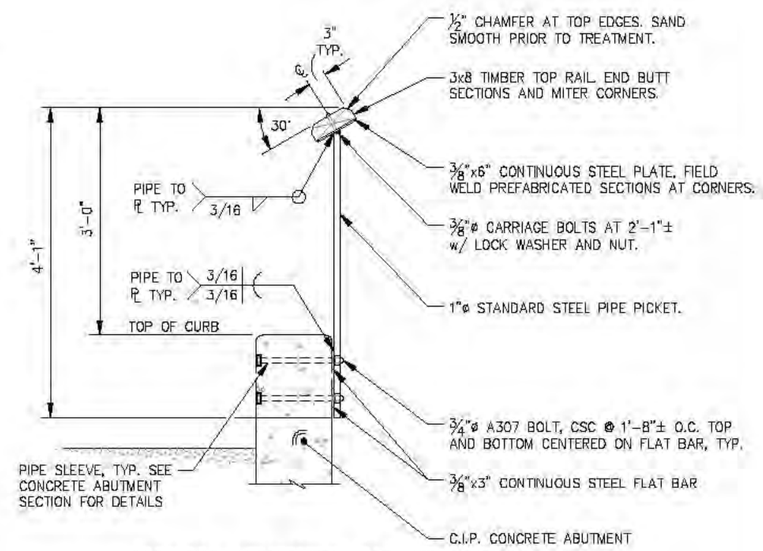

TYPICAL ABUTMENT RAILING SECTION

NOTE: DETAIL AT C FLOAT APPROACH DOCK ABUTMENT SIMILAR.

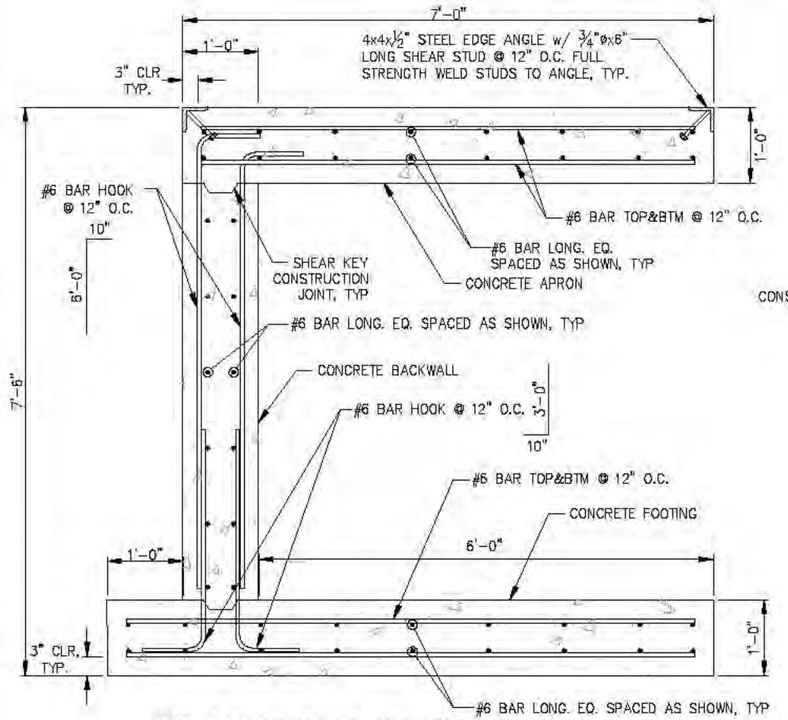

A CONCRETE ABUTMENT SECTION

NOTE: DETAIL AT C FLOAT APPROACH DOCK ABUTMENT SIMILAR.

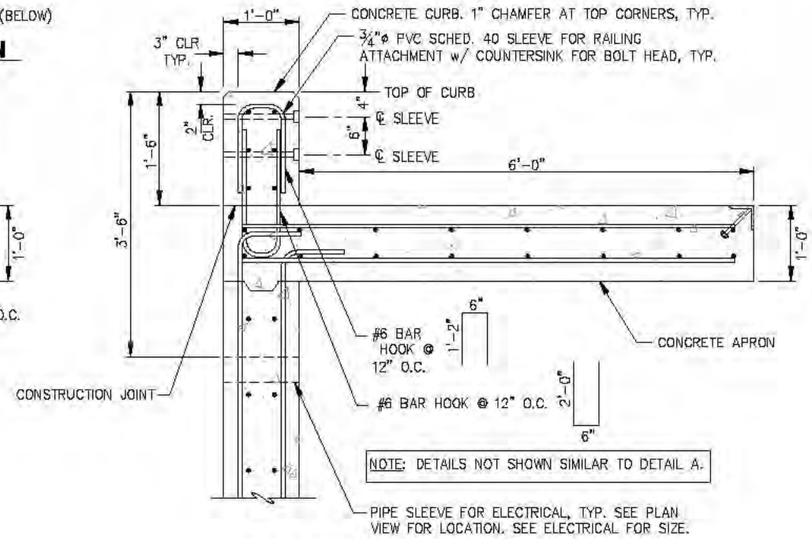

B CONCRETE ABUTMENT SECTION

NOTE: DETAIL AT C FLOAT APPROACH DOCK ABUTMENT SIMILAR.

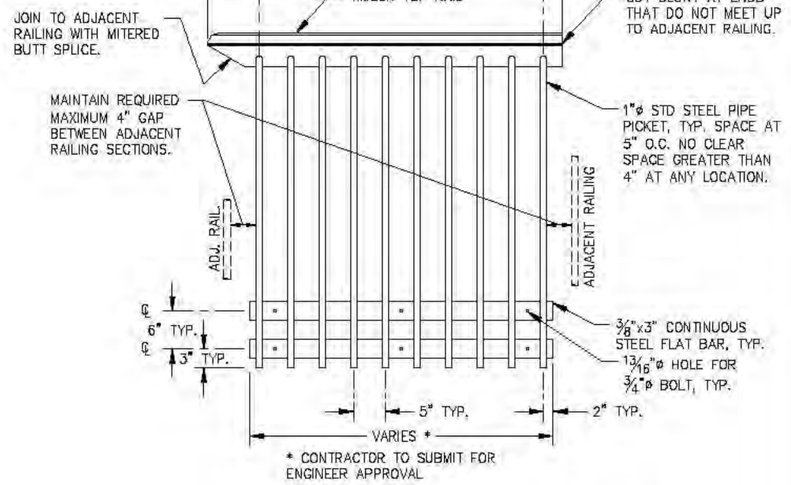

TYPICAL ABUTMENT RAILING DETAILS

NOTE: DETAIL AT C FLOAT APPROACH DOCK ABUTMENT SIMILAR.

REVISIONS

REV.	DATE	DESCRIPTION	DWN.	CKD.	APP.

P N D ENGINEERS, INC.
9360 Glacier Highway, Ste. 100
Juneau, Alaska 99801
Phone: 907-586-2093
Fax: 907-586-2099
www.pndengineers.com

DESIGN: MLB CHECKED: JLD
DRAWN: KLL APPROVED: CRS
SCALE: NTS

STATE OF ALASKA — John L. DeMuth — CE-8847 — REGISTERED PROFESSIONAL ENGINEER
DATE: 2/28/14

CITY & BOROUGH OF JUNEAU, ALASKA
AURORA HARBOR REBUILD - PHASE I
CONTRACT NO. DH 12-160

SHEET TITLE:
SOUTH APPROACH DOCK CONCRETE ABUTMENT DETAILS

PND PROJECT NO.: 122055

2.13
SHEET 28 OF 143

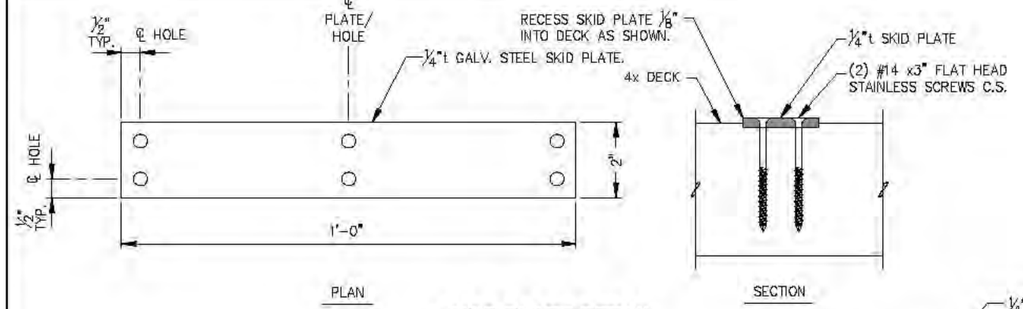

SKID PLATE DETAIL

(12 TOTAL)

NOTES:

1. ALL DECK TIMBER SHALL BE SUPPORTED BY A MINIMUM OF TWO STRINGERS.
2. DECK BOARDS SHALL BE SPLICED WITH A RANDOM LAYOUT WITH NO TWO ADJACENT BOARDS SPLICED AT SAME JOIST.
3. DECK TIMBER BOARDS SHALL HAVE A MINIMUM LENGTH OF 12'-0", AT BULLRAIL POST LOCATIONS.

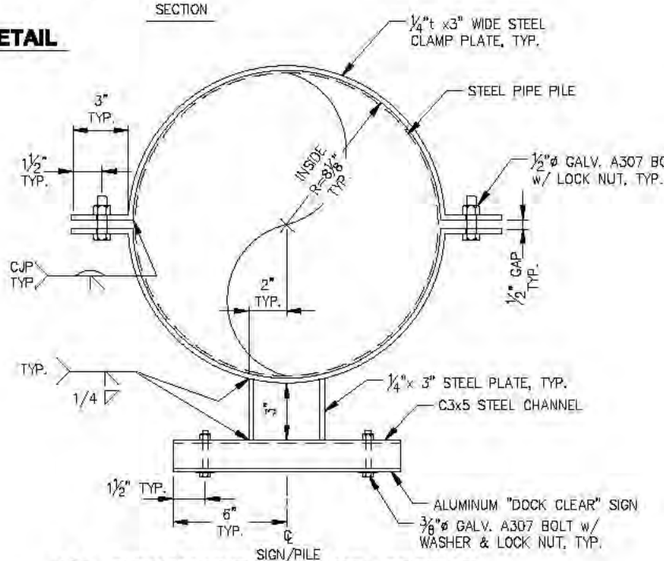

A SIGN MOUNTING CLAMP - SECTION

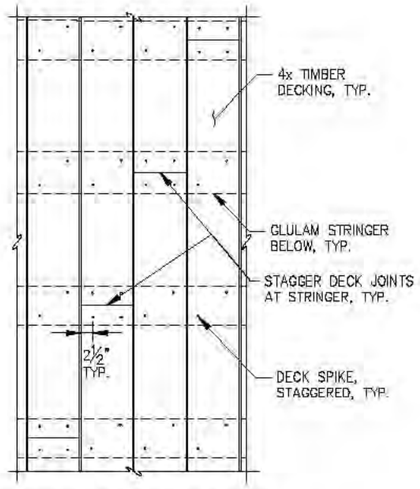

TYPICAL DECK STAGGER

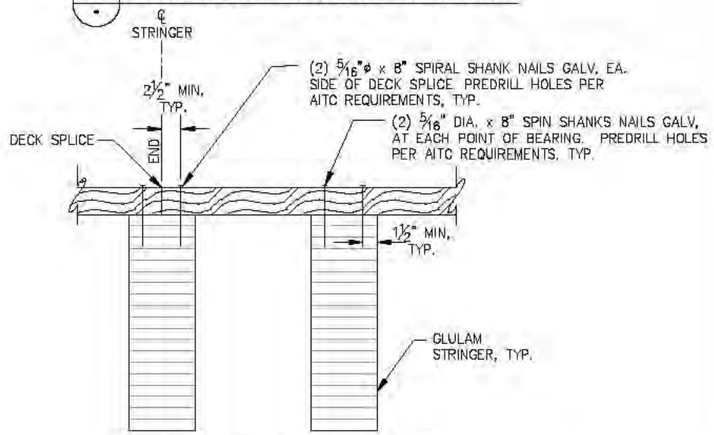

TYPICAL DECK TO JOIST CONNECTION

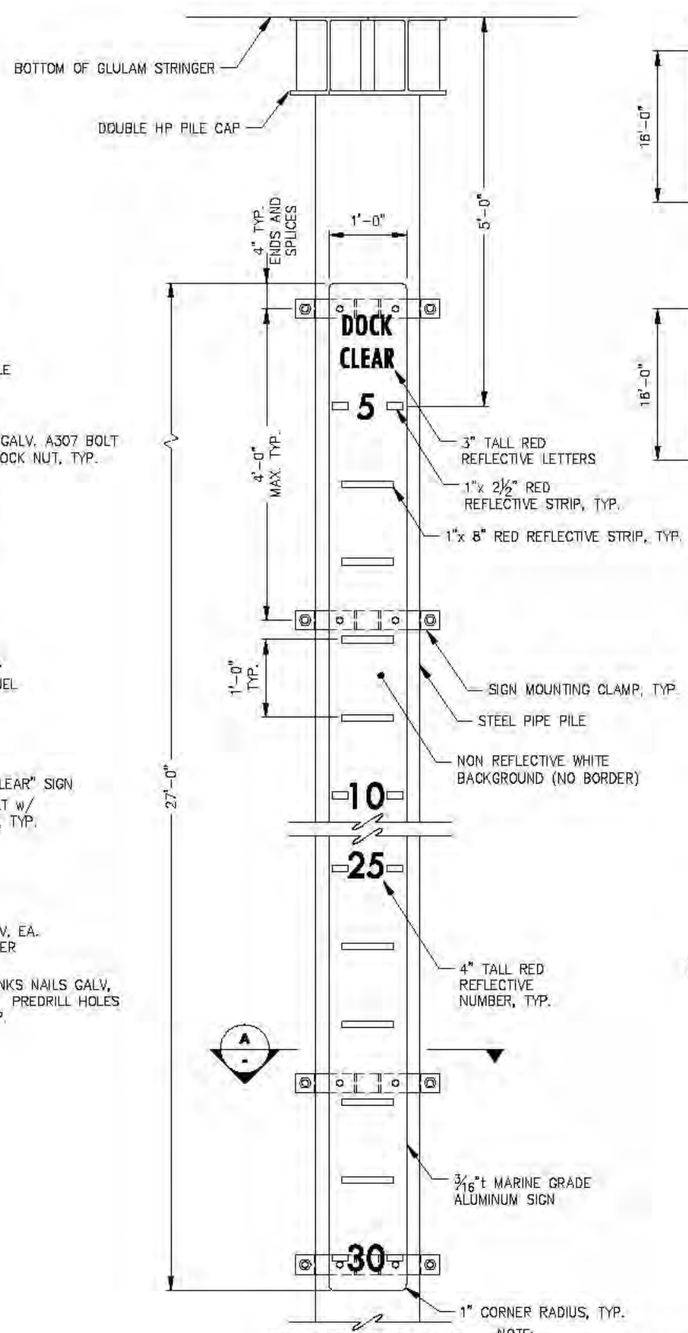

DOCK CLEAR SIGN

(4) TOTAL REQ'D

NOTE: SEE APPROACH DOCK ELEVATION DRAWINGS FOR MOUNTING LOCATIONS OF "DOCK CLEAR" SIGNS.

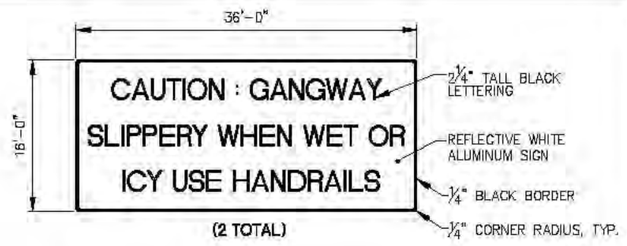

GANGWAY SIGNAGE

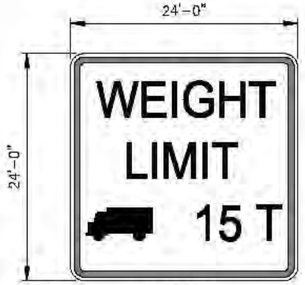

MUTCD R12-5 SIGN

(MODIFIED AS SHOWN)

NOTES:
1. MOUNT SIGNS TO APPROACH DOCK SAFETY RAILS w/(4) HOT DIPPED GALVANIZED U-BOLTS, OR SIMILAR. FINAL LOCATION PER OWNER/ENGINEER.
2. ONE OF EACH SIGN SHALL BE MOUNTED AT BOTH THE SOUTH APPROACH DOCK AND THE C FLOAT APPROACH DOCK.

REVISIONS

REV.	DATE	DESCRIPTION	DWN.	CKD.	APP.

PND ENGINEERS, INC.
9360 Glacier Highway, Ste. 100
Juneau, Alaska 99801
Phone: 907-586-2093
Fax: 907-586-2099
www.pndengineers.com

DESIGN: MLB CHECKED: JLD
DRAWN: WRB APPROVED: CRS
SCALE: NTS
DATE: 2/28/14

CITY & BOROUGH OF JUNEAU, ALASKA
AURORA HARBOR REBUILD - PHASE I
CONTRACT NO. DH 12-160

SHEET TITLE:
SOUTH APPROACH DOCK MISCELLANEOUS DETAILS

PND PROJECT NO.: 122055 -----.DWG

2.14
SHEET 29 OF 143

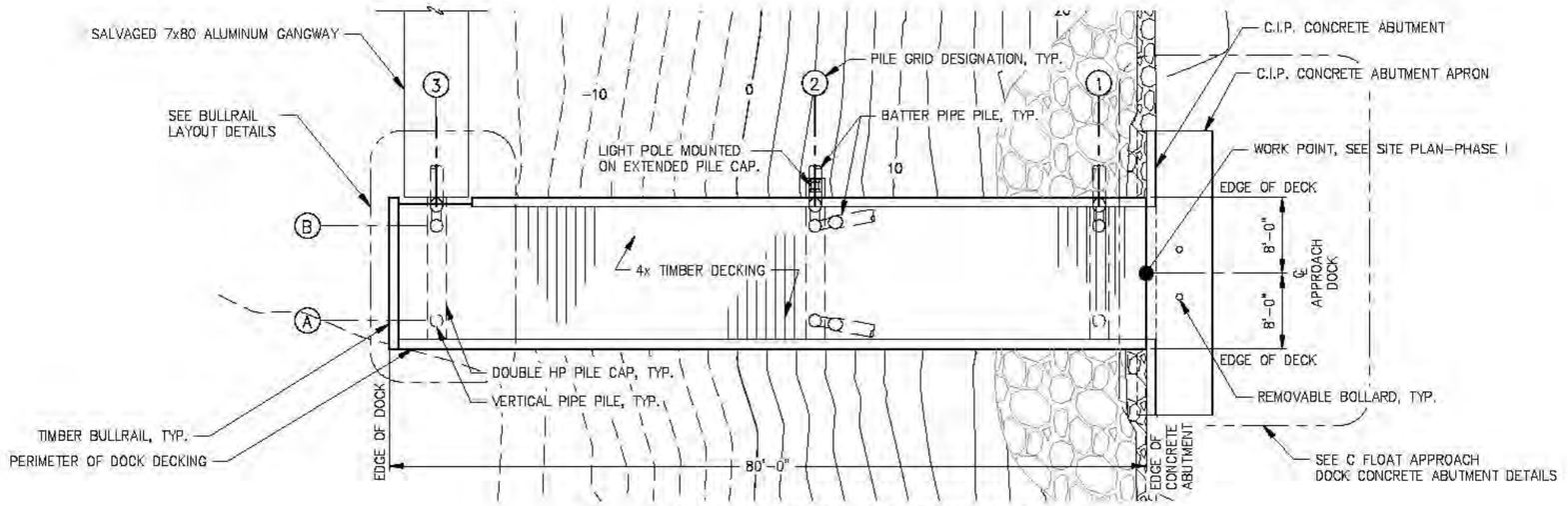

C FLOAT APPROACH DOCK - PLAN

SCALE IN FEET
0 8 16 FT.

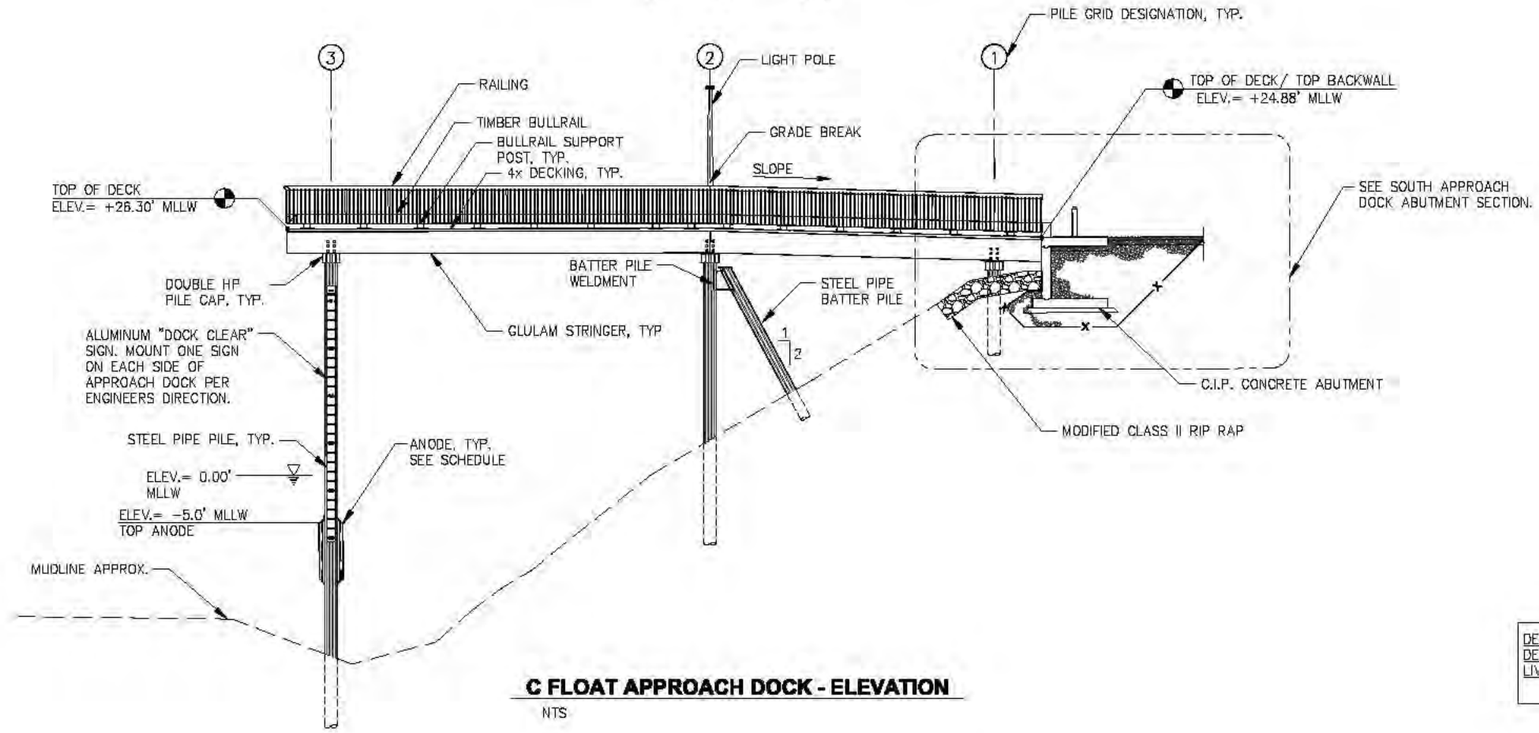

C FLOAT APPROACH DOCK - ELEVATION

NTS

DESIGN CRITERIA:
DEAD LOAD: WEIGHT OF ALL MATERIALS OF CONSTRUCTION.
LIVE LOADS: 1. AASHTO H15-44 DESIGN TRUCK.
2. 100 PSF UNIFORM LIVE LOAD.

REVISIONS

REV.	DATE	DESCRIPTION	DWN.	CKD.	APP.

PND ENGINEERS, INC.
9360 Glacier Highway, Ste. 100
Juneau, Alaska 99801
Phone: 907-586-2093
Fax: 907-586-2099
www.pndengineers.com

DESIGN: MLB CHECKED: JLD
DRAWN: KLL APPROVED: CRS
SCALE: AS SHOWN
DATE: 2/28/14

STATE OF ALASKA — John L. DeMuth CE-8847 — REGISTERED PROFESSIONAL ENGINEER

CITY & BOROUGH OF JUNEAU, ALASKA
AURORA HARBOR REBUILD - PHASE I
CONTRACT NO. DH 12-160

SHEET TITLE:
C FLOAT APPROACH DOCK PLAN AND ELEVATION

PND PROJECT NO.: 122055

3.01
SHEET 30 OF 143

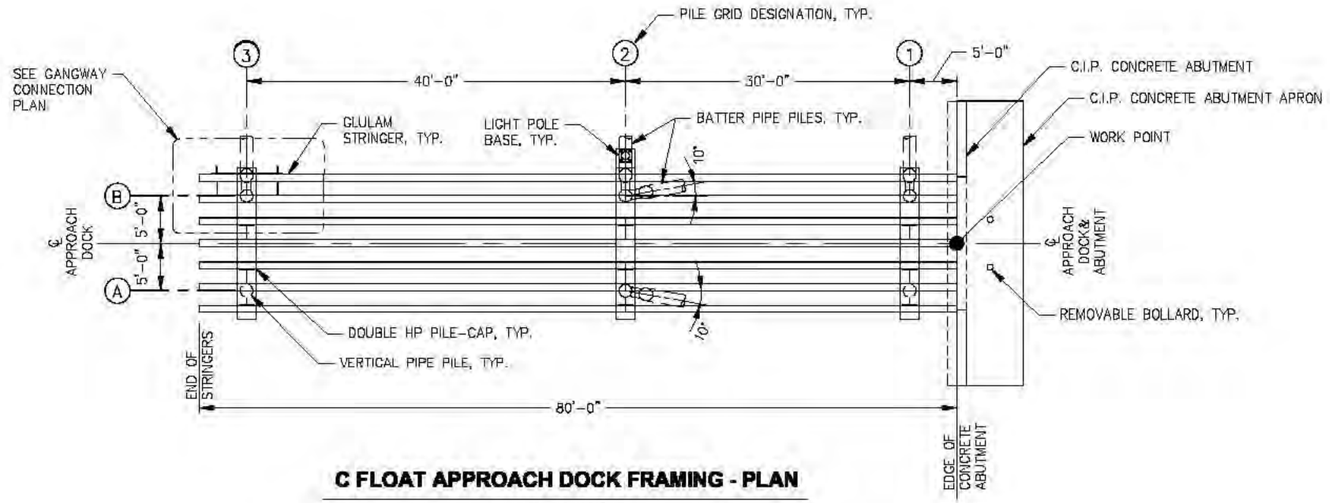

C FLOAT APPROACH DOCK FRAMING - PLAN

SCALE IN FEET
0 8 16 FT.

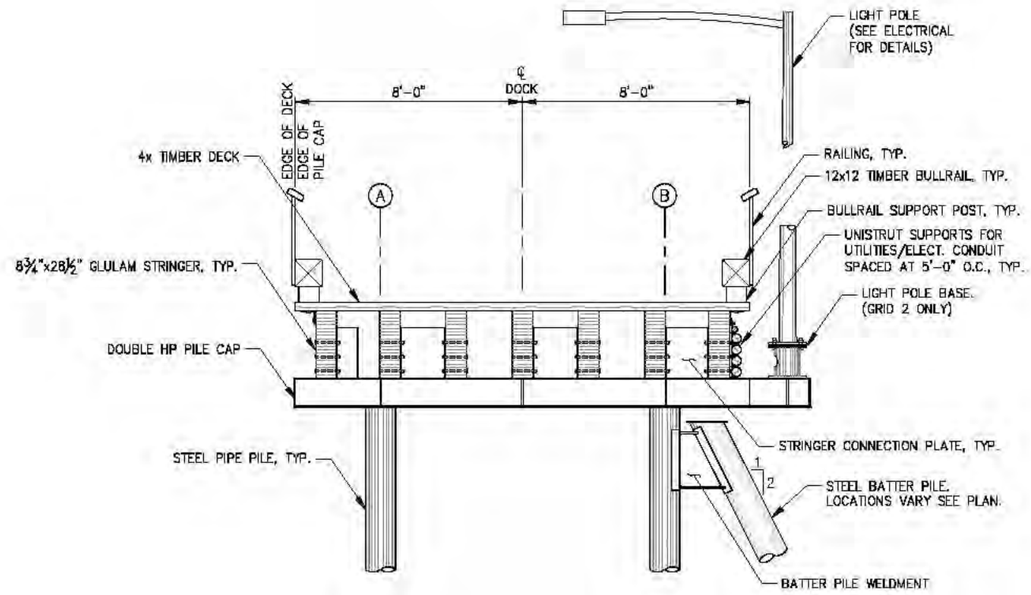

TYPICAL APPROACH DOCK SECTION

REVISIONS

REV.	DATE	DESCRIPTION	DWN.	CKD.	APP.

P N D ENGINEERS, INC.
9360 Glacier Highway, Ste. 100
Juneau, Alaska 99801
Phone: 907-586-2093
Fax: 907-586-2099
www.pndengineers.com

DESIGN: MLB CHECKED: JLD
DRAWN: KLL APPROVED: CRS
SCALE: AS SHOWN
DATE: 2/28/14

STATE OF ALASKA — John L. Dalkuth CE-8847 — REGISTERED PROFESSIONAL ENGINEER

CITY & BOROUGH OF JUNEAU, ALASKA
AURORA HARBOR REBUILD - PHASE I
CONTRACT NO. DH 12-160

SHEET TITLE:
C FLOAT APPROACH DOCK FRAMING PLAN AND SECTION

PND PROJECT NO.: 122055

3.02
SHEET 31 OF 143

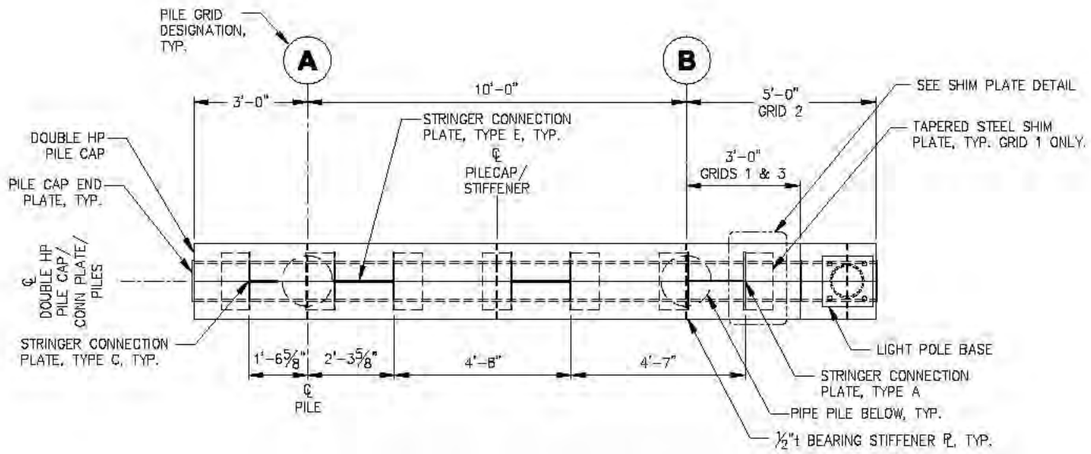

PLAN

PILE CAP AT GRIDS 1, 2 & 3

NOTE: DETAILS NOT SHOWN SIMILAR TO SOUTH APPROACH DOCK.

NOTES:
- ALL PLATE DIMENSIONS ARE TO THE OUTSIDE OF SIDE PLATES, UNLESS OTHERWISE NOTED.
- ALL PILE CAPS STEEL DBL HP12x84, UNLESS OTHERWISE NOTED.
- ALL DETAILS NOT SHOWN SIMILAR TO SOUTH APPROACH DOCK PILE CAP DETAILS.

NOTE:
ALL PLATES ½"t STEEL UNLESS NOTED OTHERWISE.

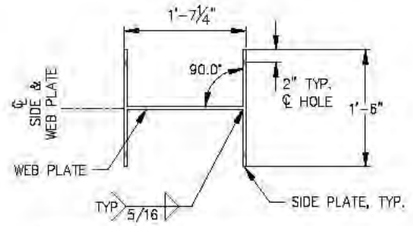

STRINGER CONNECTION PLATE TYPE E

NOTE: SEE SOUTH APPROACH DOCK FOR TYPE A & C STRINGER CONNECTION PLATE DETAILS.

ANODE SCHEDULE - ADDITIVE ALT B			
PILE DIAMETER	DIMENSIONS	NOMINAL WT.	QUANTITY
16"ø	6"x6"x72"	260 LBS.	6

NOTE: SEE SOUTH APPROACH DOCK FOR ANODE DETAILS.

C FLOAT APPROACH DOCK - PILE SCHEDULE							
GRID	DESIGNATION	ULTIMATE COMPRESSION LOAD (KIPS)	ULTIMATE TENSION LOAD (KIPS)	PILE DIAMETER (IN)	PILE WALL THICKNESS (IN)	REQUIRED FURNISHED LENGTH (FT)	PILE TIP
1-A	VERTICAL	65	0	16	0.500	80	CONICAL TIP
1-B(V)	VERTICAL	65	0	16	0.500	80	CONICAL TIP
1-B(B)	BATTER	20	-20	16	0.500	80	CONICAL TIP
2-A(V)	VERTICAL	115	-10	16	0.500	80	SPIN FIN ®
2-A(B)	LONG. BATTER	40	-40	16	0.500	80	CONICAL TIP
2-B(V)	VERTICAL	115	-10	16	0.500	80	SPIN FIN ®
2-B(B)	BATTER	35	-35	16	0.500	80	CONICAL TIP
2-B(B)	LONG. BATTER	40	-40	16	0.500	80	CONICAL TIP
3-A	VERTICAL	90	0	16	0.500	100	CONICAL TIP
3-B(V)	VERTICAL	90	0	16	0.500	100	CONICAL TIP
3-B(B)	BATTER	30	-30	16	0.500	100	CONICAL TIP

NOTE:

1. ALL PILE DETAILS AND BATTER PILE WELDMENT DETAILS SIMILAR TO SOUTH APPROACH DOCK DETAILS.

REVISIONS

REV.	DATE	DESCRIPTION	DWN.	CKD.	APP.

PND ENGINEERS, INC.
9360 Glacier Highway, Ste. 100
Juneau, Alaska 99801
Phone: 907-586-2093
Fax: 907-586-2099
www.pndengineers.com

DESIGN: MLB CHECKED: JLD
DRAWN: KLL APPROVED: CRS
SCALE: NTS
DATE: 2/28/14

CITY & BOROUGH OF JUNEAU, ALASKA
AURORA HARBOR REBUILD - PHASE I
CONTRACT NO. DH 12-160

SHEET TITLE:
C FLOAT APPROACH DOCK
PILE SCHEDULE & PILE CAP DETAILS

PND PROJECT NO.: 122055

3.03
SHEET 32 OF 143

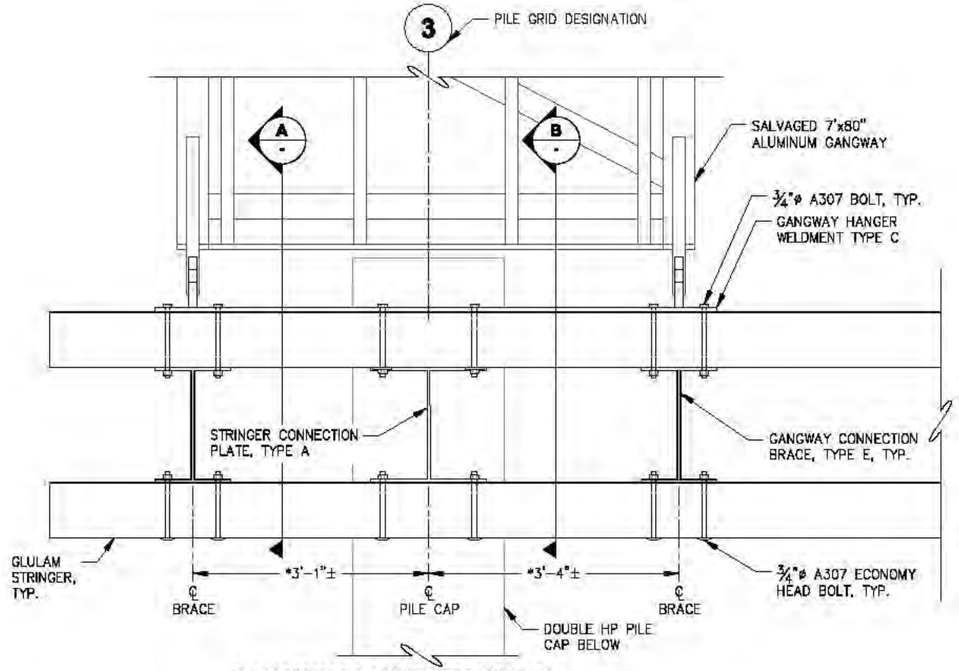

GANGWAY CONNECTION PLAN

NOTE: DECKING NOT SHOWN FOR CLARITY.

* CONTRACTOR TO FIELD VERIFY. GANGWAY SHALL LINE UP PARALLEL TO GANGWAY GUIDES ON SALVAGED LANDING FLOAT.

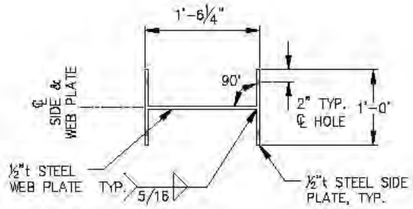

GANGWAY CONNECTION BRACE TYPE E (2 TOTAL)

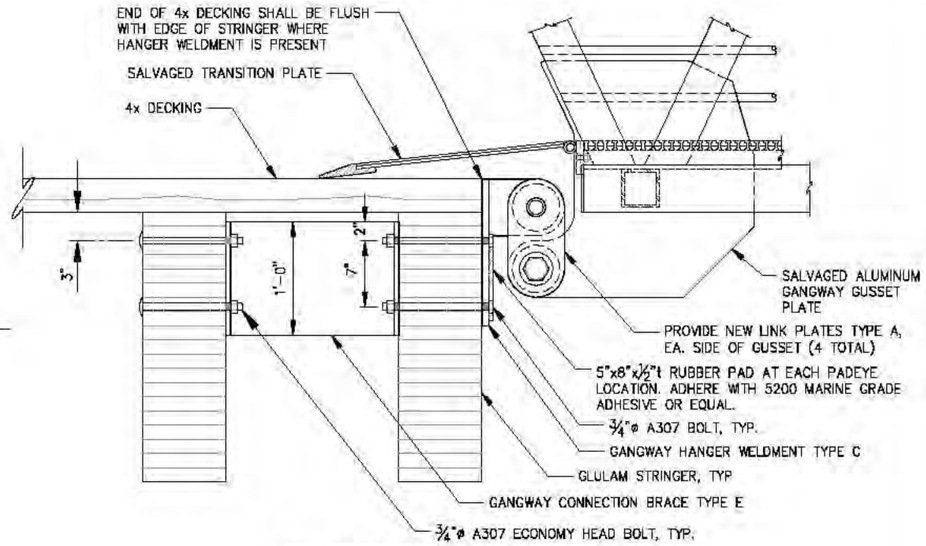

A - SECTION

NOTE: SEE "GANGWAY DETAILS" ON SHEET 4.03 FOR ALL MOUNTING DETAILS NOT SHOWN.

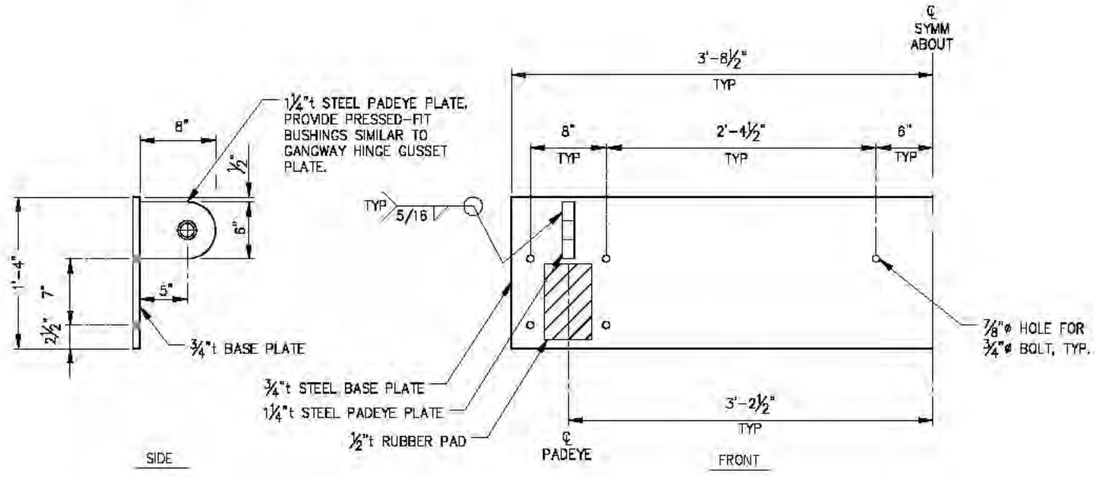

GANGWAY HANGAR WELDMENT TYPE C (1 TOTAL)

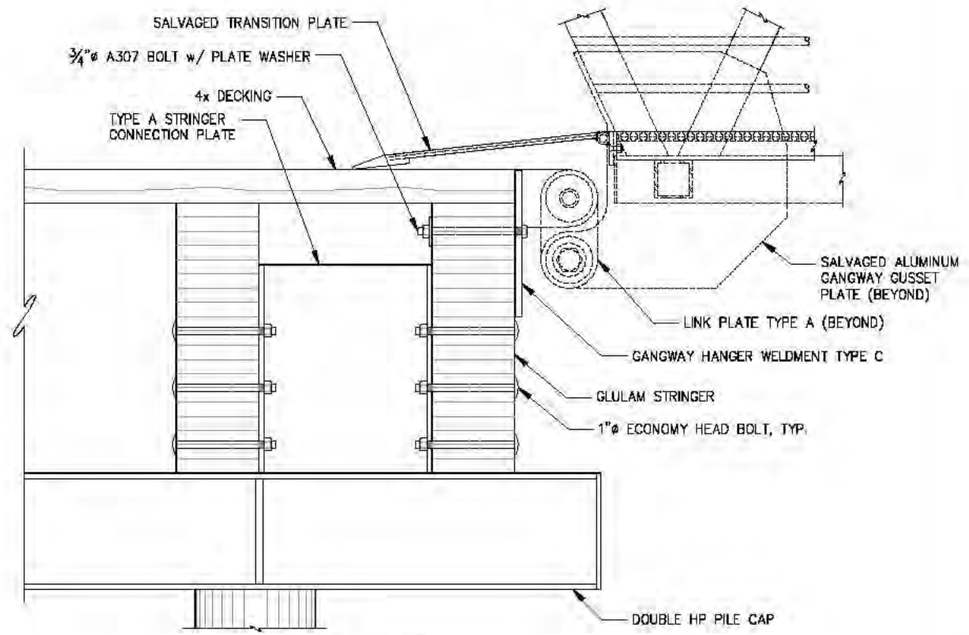

B - SECTION

REVISIONS

REV.	DATE	DESCRIPTION	DWN.	CKD.	APP.

PND ENGINEERS, INC.
9360 Glacier Highway, Ste. 100
Juneau, Alaska 99801
Phone: 907-586-2093
Fax: 907-586-2099
www.pndengineers.com

DESIGN: MLB CHECKED: JLD
DRAWN: KLL APPROVED: CRS
SCALE: NTS
DATE: 2/28/14

STATE OF ALASKA — John L. DeMuth — CE-8847 — REGISTERED PROFESSIONAL ENGINEER

CITY & BOROUGH OF JUNEAU, ALASKA
AURORA HARBOR REBUILD - PHASE I
CONTRACT NO. DH 12-160

SHEET TITLE:
C FLOAT APPROACH DOCK GANGWAY CONNECTION DETAILS

PND PROJECT NO.: 122055

3.04
SHEET 33 OF 143

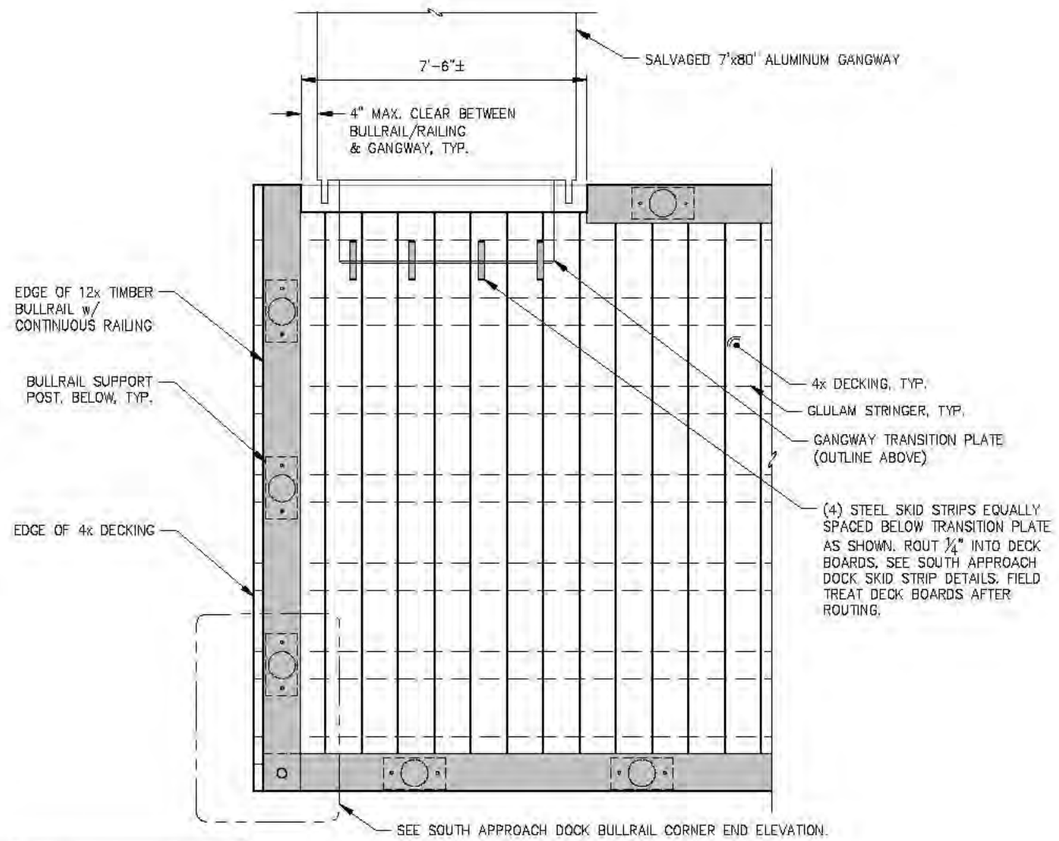

NOTE: CONTRACTOR TO SUBMIT BULLRAIL/RAILING/SUPPORT POST LAYOUT FOR ENGINEER APPROVAL.

BULLRAIL LAYOUT DETAILS

NOTE: DETAILS NOT SHOWN SIMILAR TO SOUTH APPROACH DOCK BULLRAIL/RAILING DETAILS. CONTINUOUS TOP RAILING AND GANGWAY GUARDS NOT SHOWN FOR CLARITY.

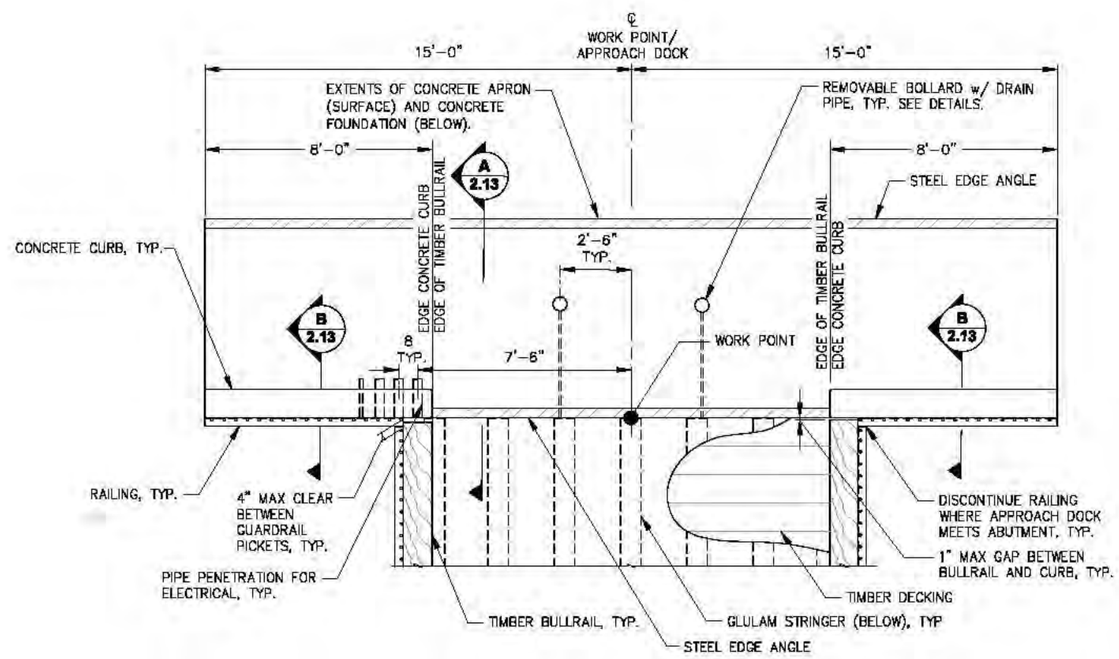

CONCRETE ABUTMENT PLAN

NOTE: ALL DETAILS NOT SHOWN SIMILAR TO SOUTH APPROACH DOCK CONCRETE ABUTMENT DETAILS.

REVISIONS

REV.	DATE	DESCRIPTION	DWN.	CKD.	APP.

PND ENGINEERS, INC.
9360 Glacier Highway, Ste. 100
Juneau, Alaska 99801
Phone: 907-586-2093
Fax: 907-586-2099
www.pndengineers.com

DESIGN: MLB CHECKED: JLD
DRAWN: DD APPROVED: CRS
SCALE: NTS
DATE: 2/28/14

STATE OF ALASKA — John L. DeMuth — CE-8847 — REGISTERED PROFESSIONAL ENGINEER

CITY & BOROUGH OF JUNEAU, ALASKA
AURORA HARBOR REBUILD - PHASE I
CONTRACT NO. DH 12-160

SHEET TITLE:
C FLOAT APPROACH DOCK
BULLRAIL & CONCRETE ABUTMENT DETAILS

PND PROJECT NO.: 122055

3.05
SHEET 34 OF 143

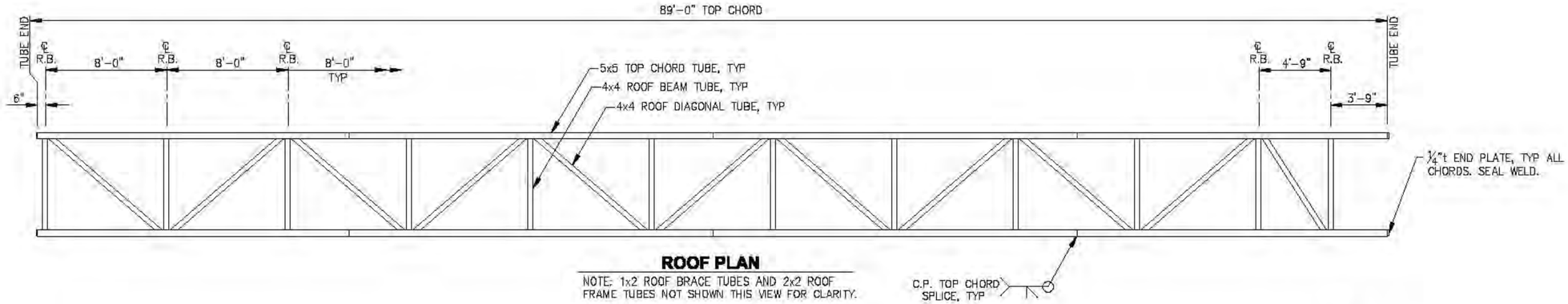

ROOF PLAN

NOTE: 1x2 ROOF BRACE TUBES AND 2x2 ROOF FRAME TUBES NOT SHOWN THIS VIEW FOR CLARITY.

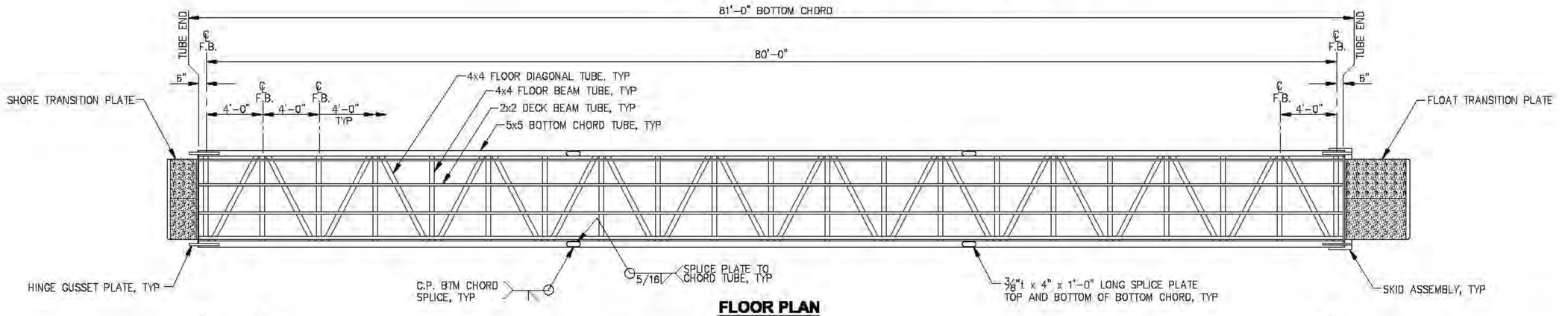

FLOOR PLAN

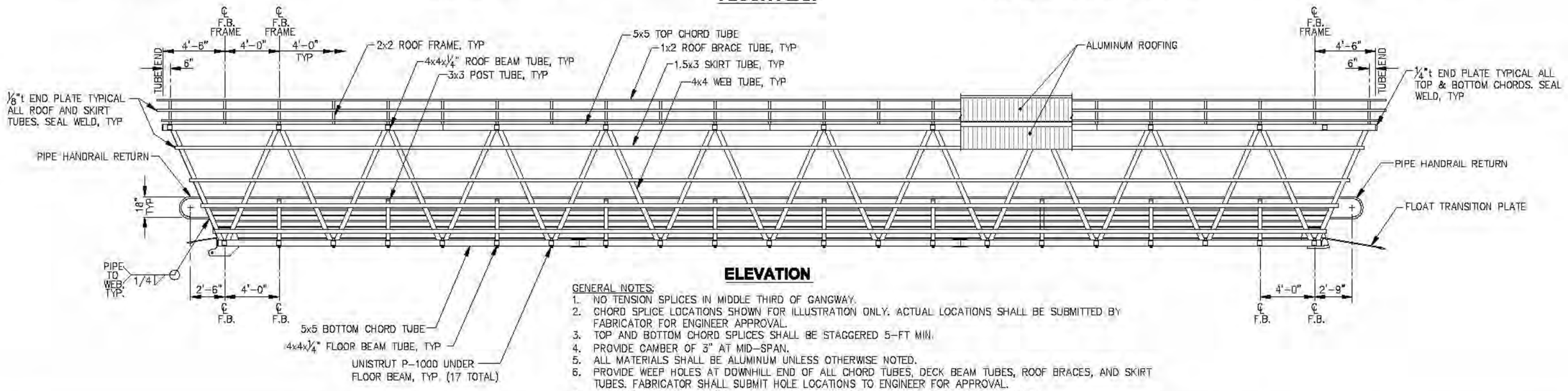

ELEVATION

GENERAL NOTES:

1. NO TENSION SPLICES IN MIDDLE THIRD OF GANGWAY.
2. CHORD SPLICE LOCATIONS SHOWN FOR ILLUSTRATION ONLY. ACTUAL LOCATIONS SHALL BE SUBMITTED BY FABRICATOR FOR ENGINEER APPROVAL.
3. TOP AND BOTTOM CHORD SPLICES SHALL BE STAGGERED 5-FT MIN.
4. PROVIDE CAMBER OF 3" AT MID-SPAN.
5. ALL MATERIALS SHALL BE ALUMINUM UNLESS OTHERWISE NOTED.
6. PROVIDE WEEP HOLES AT DOWNHILL END OF ALL CHORD TUBES, DECK BEAM TUBES, ROOF BRACES, AND SKIRT TUBES. FABRICATOR SHALL SUBMIT HOLE LOCATIONS TO ENGINEER FOR APPROVAL.
7. 1x2 UPPER SKIRT TUBE (ADJACENT TO TOP CHORD) NOT SHOWN THIS VIEW FOR CLARITY

REVISIONS

REV.	DATE	DESCRIPTION	DWN.	CKD.	APP.

P N D ENGINEERS, INC.
9360 Glacier Highway, Ste. 100
Juneau, Alaska 99801
Phone: 907-586-2093
Fax: 907-586-2099
www.pndengineers.com

DESIGN: MS CHECKED: JLD
DRAWN: WRB APPROVED: CRS
SCALE: AS SHOWN
DATE: 2/28/14

STATE OF ALASKA — John L. Dalrymple — CE-8847 — REGISTERED PROFESSIONAL ENGINEER

CITY & BOROUGH OF JUNEAU, ALASKA
AURORA HARBOR REBUILD - PHASE I
CONTRACT NO. DH 12-160

SHEET TITLE: **GANGWAY PLAN AND SECTION**

4.01

PND PROJECT NO.: 122055

SHEET 35 OF 143

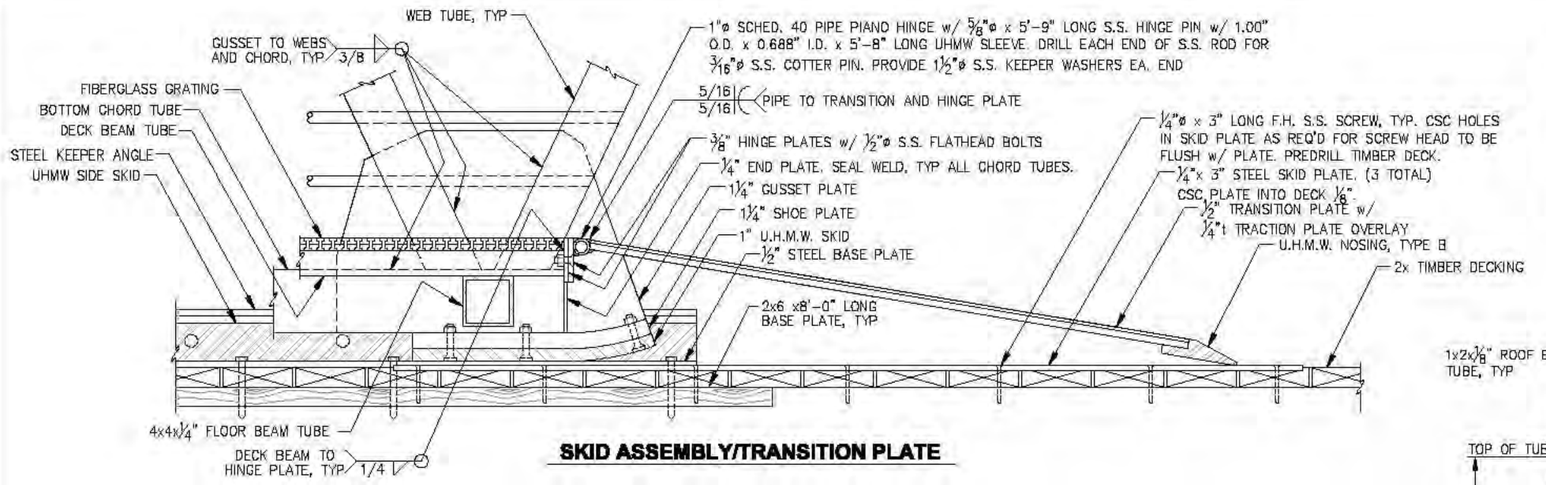

SKID ASSEMBLY/TRANSITION PLATE

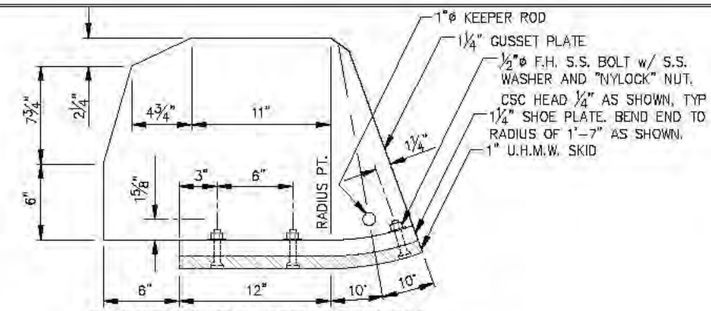

GUSSET/SKID PLATE - (2 TOTAL)

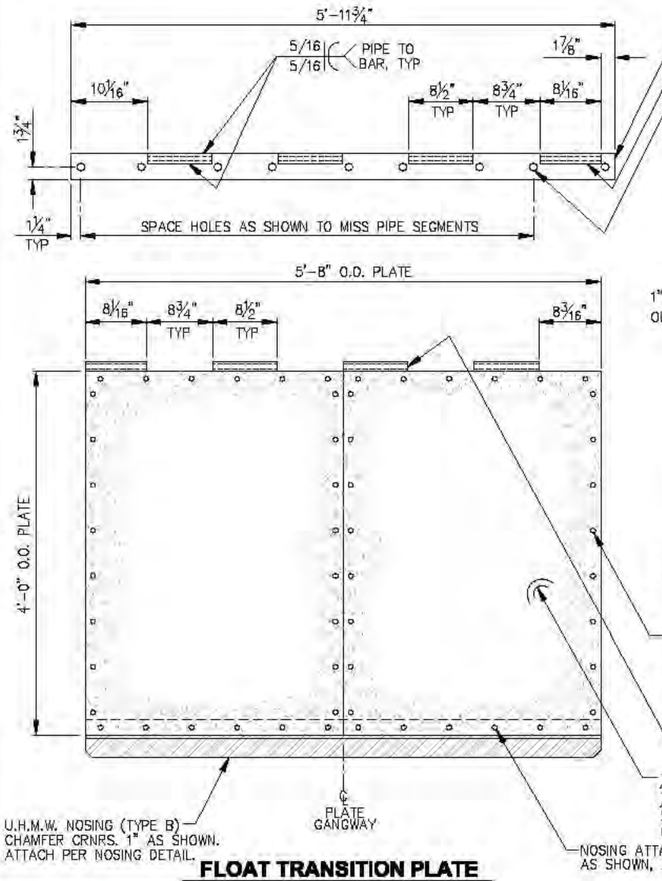

FLOAT TRANSITION PLATE

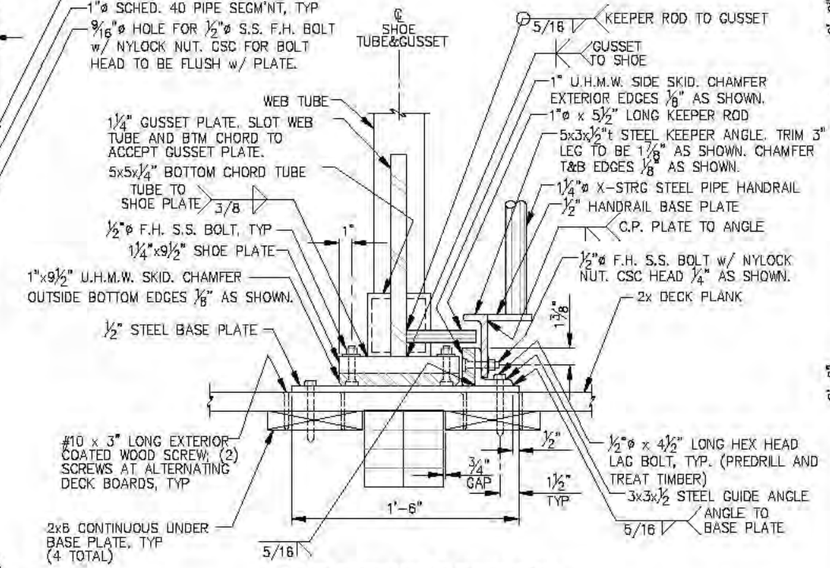

SKID ASSEMBLY SECTION

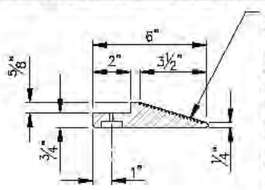

SOLID U.H.M.W. POLYETHYLENE PER SPECIFICATIONS. PROVIDE 3/16"ø HOLE w/ 1 1/16"ø x 5/16" DEEP CSC AS SHOWN. ATTACH NOSING w/ #10 S.S. FLATHEAD PHILLIPS BOLT w/ "NYLOCK" NUT AND 1"ø S.S. FENDER WASHER. TRIM BOLT AS REQ'D TO BE FLUSH w/ NUT. LOCATE BOLTS PER TRANSITION PLATE PLAN. CHAMFER BACK EDGE ⅛" AS SHOWN. FABRICATOR TO PROVIDE NON-SKID SURFACE ON TOP OF NOSING. SUBMIT FOR APPROVAL.

UHMW NOSING - TYPE A

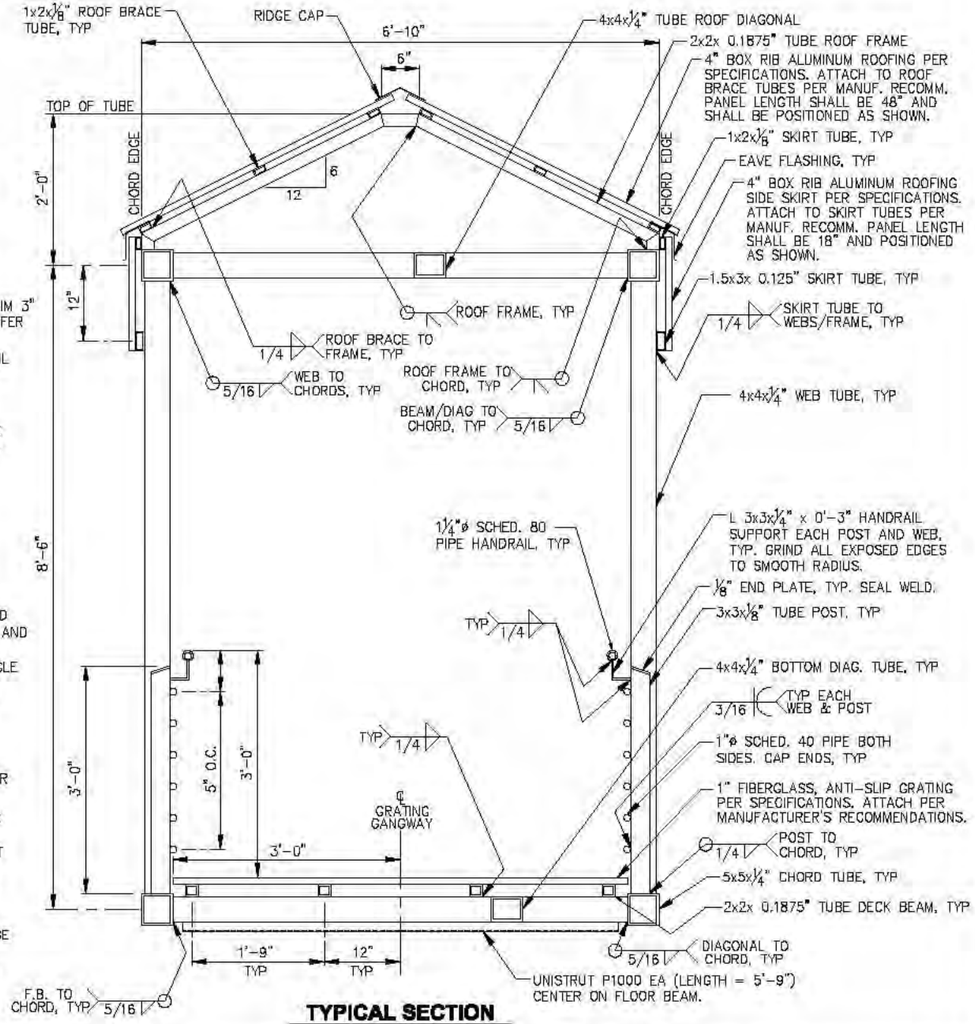

TYPICAL SECTION

REVISIONS

REV.	DATE	DESCRIPTION	DWN.	CKD.	APP.

P N D ENGINEERS, INC.
9360 Glacier Highway, Ste. 100
Juneau, Alaska 99801
Phone: 907-586-2093
Fax: 907-586-2099
www.pndengineers.com

DESIGN: JLD CHECKED: JLD
DRAWN: WRB APPROVED: CRS
SCALE: AS SHOWN
DATE: 2/28/14

STATE OF ALASKA — REGISTERED PROFESSIONAL ENGINEER — John L. DeWalt CE-8847

CITY & BOROUGH OF JUNEAU, ALASKA
AURORA HARBOR REBUILD - PHASE I
CONTRACT NO. DH 12-160

SHEET TITLE: **GANGWAY TYPICAL SECTION AND DETAILS**

PND PROJECT NO.: 122055

4.02
SHEET 36 OF 143

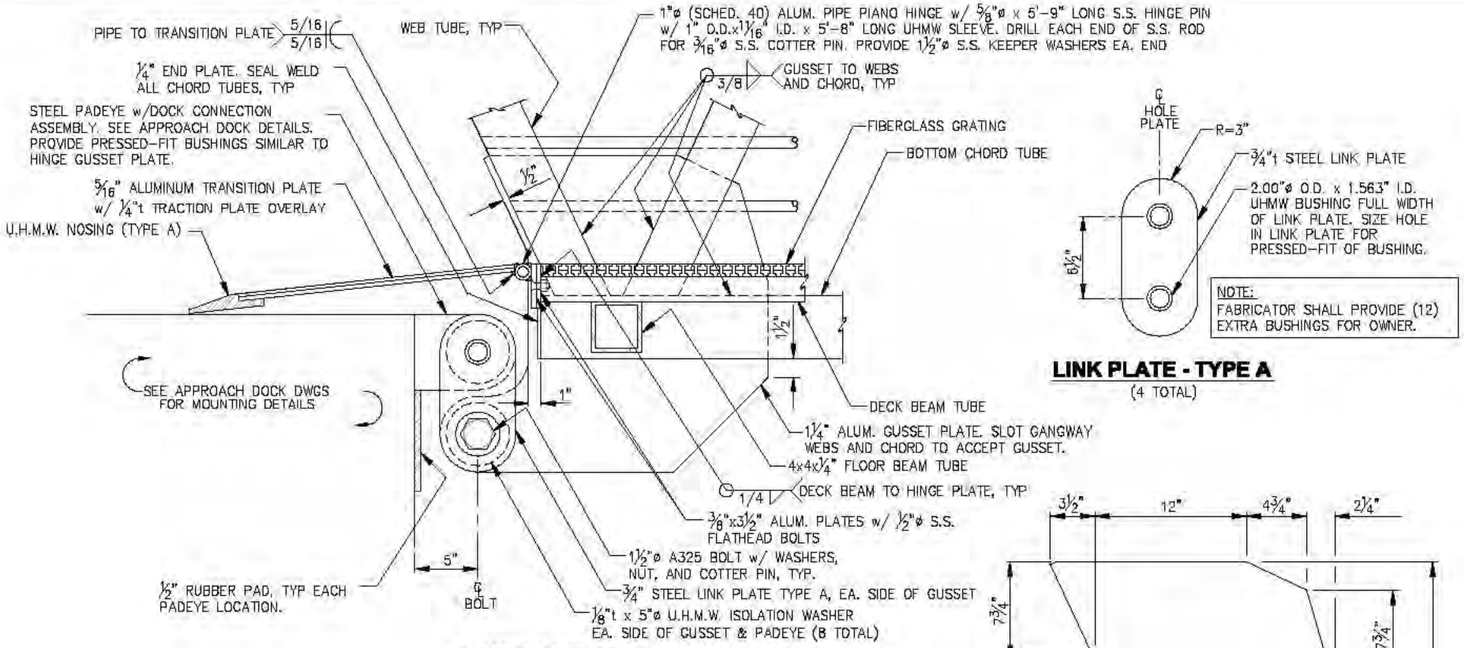

HINGE ASSEMBLY

LINK PLATE - TYPE A

(4 TOTAL)

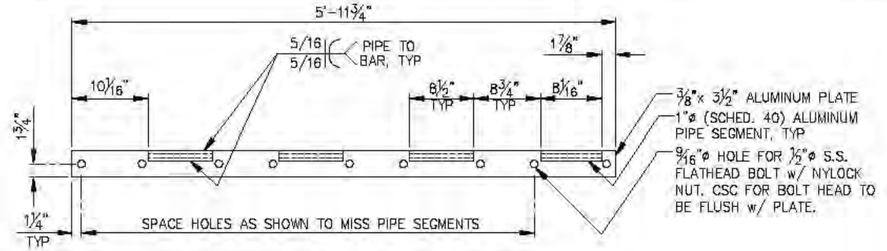

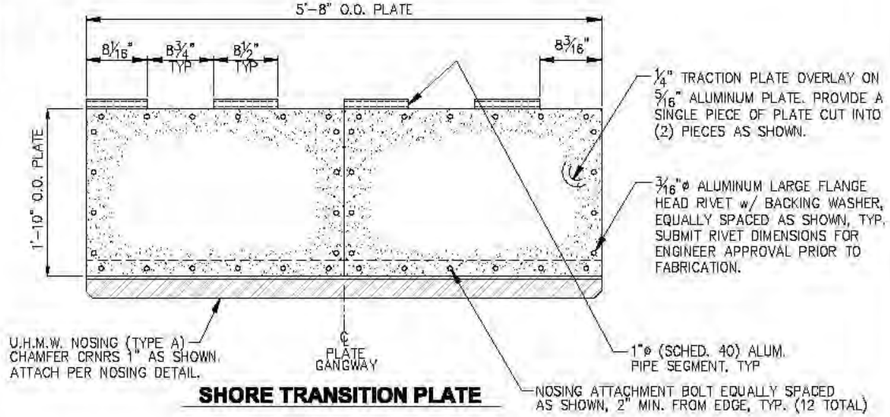

SHORE TRANSITION PLATE

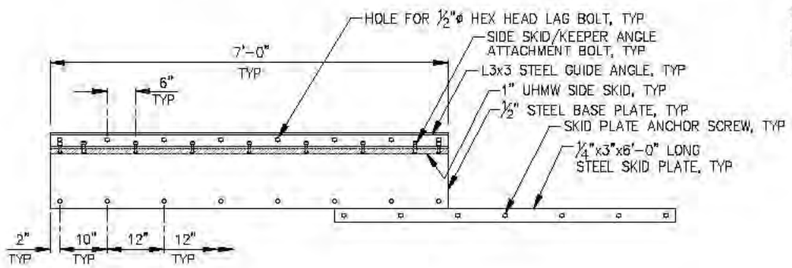

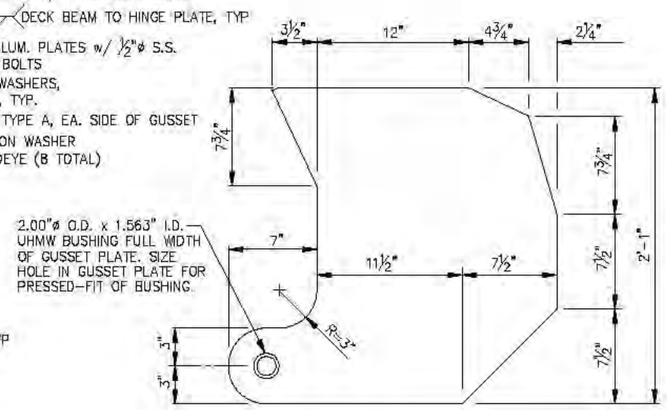

HINGE GUSSET PLATE - (2 TOTAL)

(1 1/4"ALUMINUM PLATE)

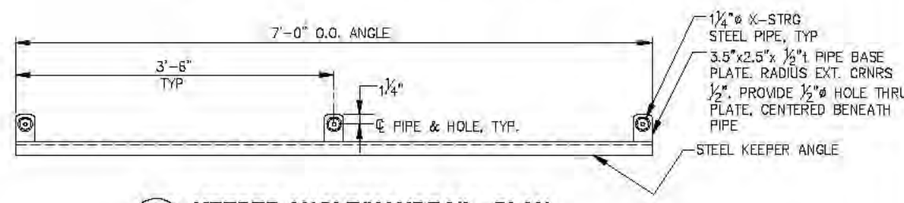

A - KEEPER ANGLE/HANDRAIL - PLAN

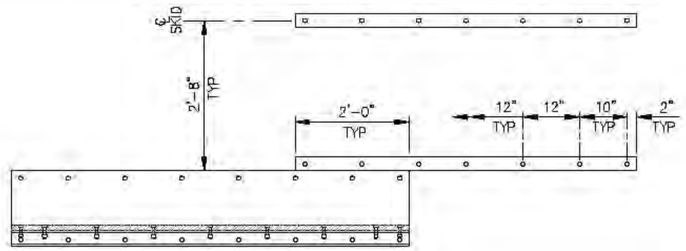

SKID BASE PLATE/GUIDE ANGLE ASSEMBLY - PLAN

NOTE: STEEL KEEPER ANGLES NOT SHOWN FOR CLARITY. PERMANENTLY ATTACH SKID BASE PLATE TO FLOAT AT ENGINEER DIRECTED LOCATION ONLY AFTER SEVERAL TIDE CYCLES TO ASSURE PROPER POSITION.

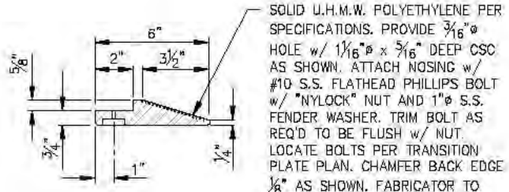

UHMW NOSING - TYPE A

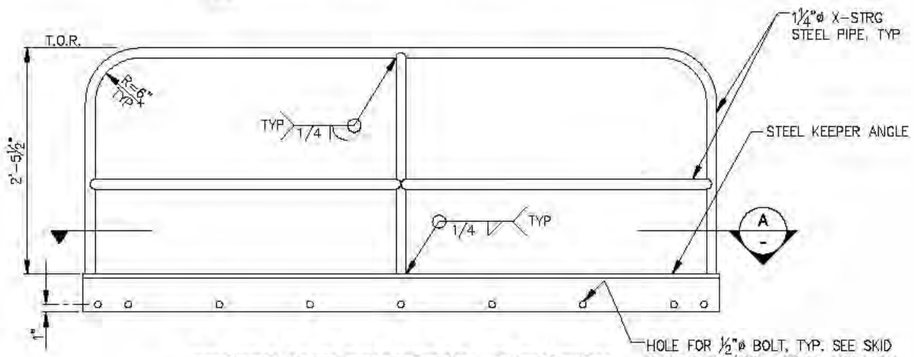

KEEPER ANGLE/HANDRAIL - ELEVATION

(2 TOTAL – PROVIDE EACH SIDE OF GANGWAY)

REVISIONS

REV.	DATE	DESCRIPTION	DWN.	CKD.	APP.

P N D ENGINEERS, INC.
9360 Glacier Highway, Ste. 100
Juneau, Alaska 99801
Phone: 907-586-2093
Fax: 907-586-2099
www.pndengineers.com

DESIGN: MS CHECKED: JLD
DRAWN: WRB APPROVED: CRS
SCALE: AS SHOWN
DATE: 2/28/14

STATE OF ALASKA — John L. DeMoth — CE-8847 — REGISTERED PROFESSIONAL ENGINEER

CITY & BOROUGH OF JUNEAU, ALASKA
AURORA HARBOR REBUILD - PHASE I
CONTRACT NO. DH 12-160

SHEET TITLE: **GANGWAY DETAILS**

PND PROJECT NO.: 122055

4.03
SHEET 37 OF 143

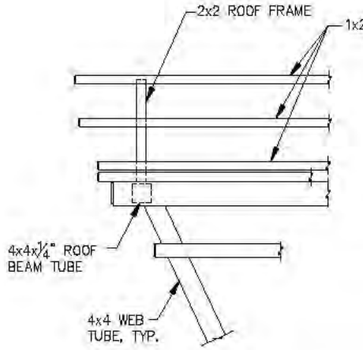

SHORE END ROOF - ELEVATION

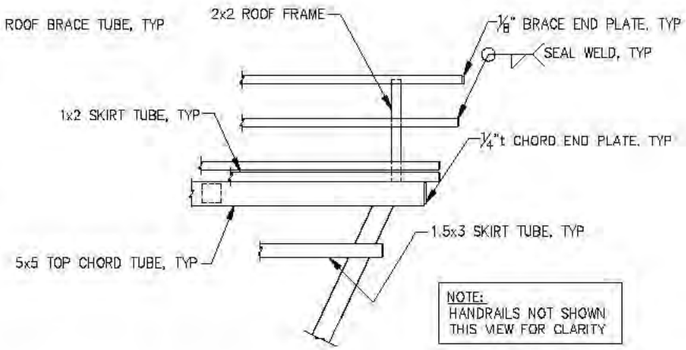

FLOAT END ROOF - ELEVATION

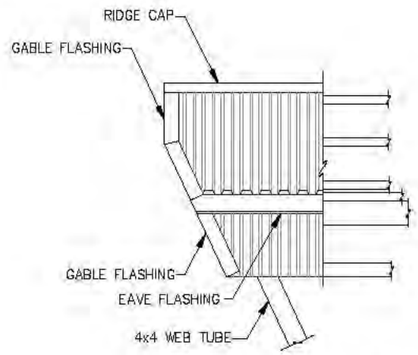

ROOFING - SHORE END ELEVATION

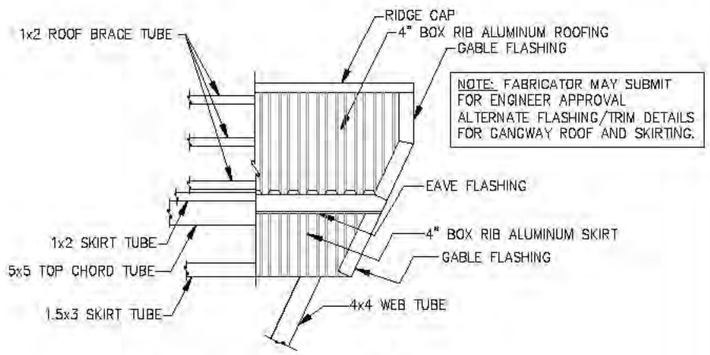

ROOFING - FLOAT END ELEVATION

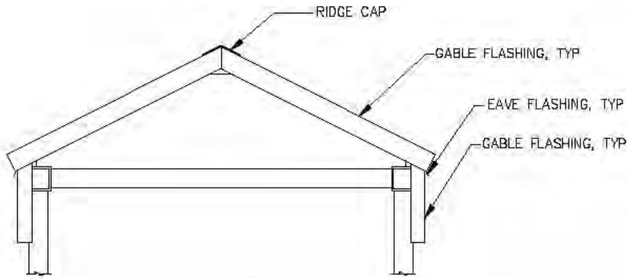

TYPICAL END VIEW

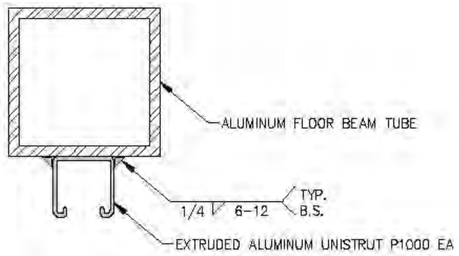

CONDUIT SUPPORT - TYPICAL SECTION

REVISIONS

REV.	DATE	DESCRIPTION	DWN.	CKD.	APP.

P N D ENGINEERS, INC.
9360 Glacier Highway, Ste. 100
Juneau, Alaska 99801
Phone: 907-586-2093
Fax: 907-586-2099
www.pndengineers.com

DESIGN: MS CHECKED: JLD
DRAWN: WRB APPROVED: CRS
SCALE: AS SHOWN
DATE: 2/28/14

STATE OF ALASKA — John L. DeMuth — CE-8847 — REGISTERED PROFESSIONAL ENGINEER

CITY & BOROUGH OF JUNEAU, ALASKA
AURORA HARBOR REBUILD - PHASE I
CONTRACT NO. DH 12-160

SHEET TITLE: GANGWAY DETAILS

4.04

PND PROJECT NO.: 122055

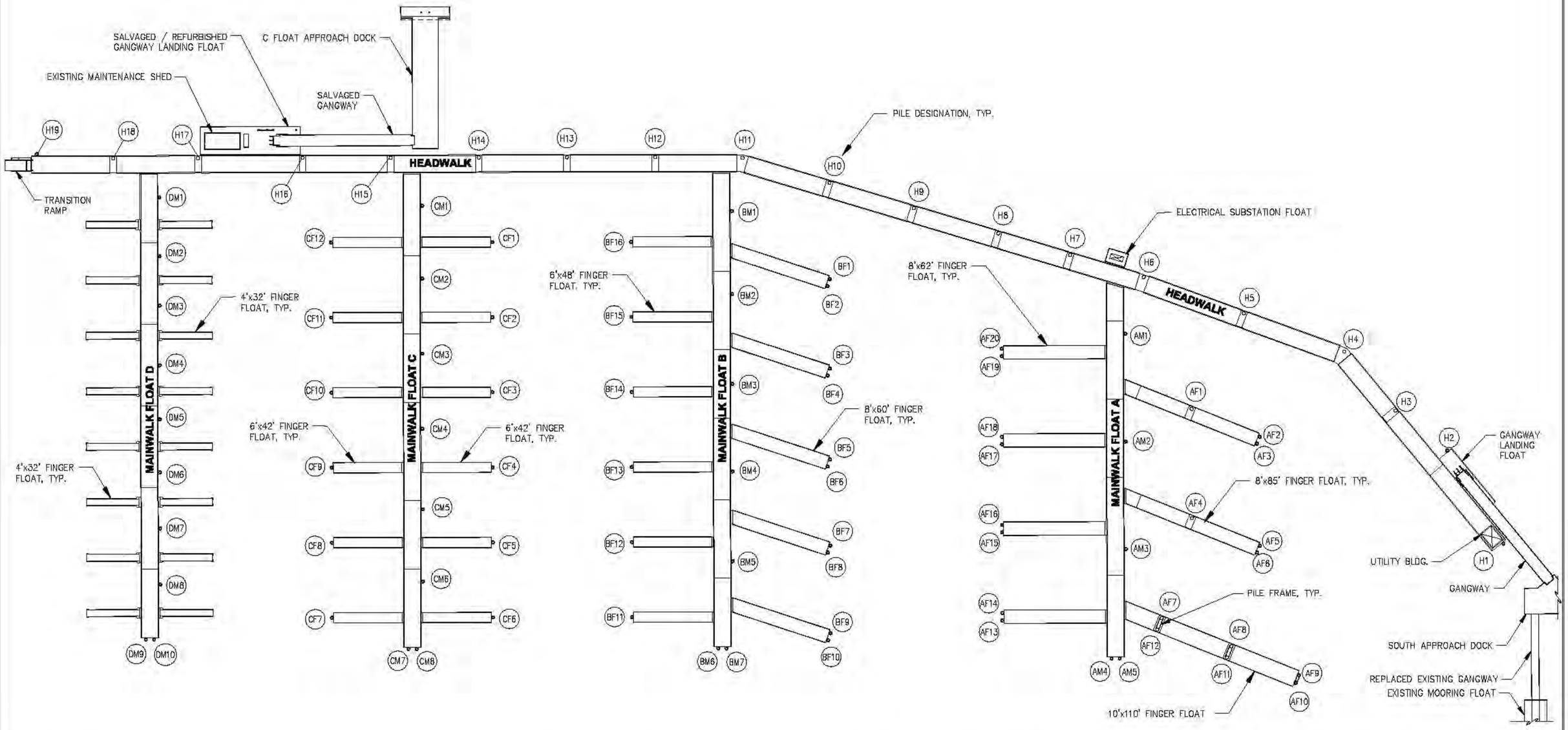

REVISIONS

REV.	DATE	DESCRIPTION	DWN.	CKD.	APP.

PND ENGINEERS, INC.
9360 Glacier Highway, Ste. 100
Juneau, Alaska 99801
Phone: 907-586-2093
Fax: 907-586-2099
www.pndengineers.com

DESIGN: MS CHECKED: JLD
DRAWN: WRB APPROVED: CRS
SCALE: SCALE IN FEET 0 30 60 FT.
DATE: 2/28/14

STATE OF ALASKA — JOHN L. DeWITT — CS-8847 — REGISTERED PROFESSIONAL ENGINEER

CITY & BOROUGH OF JUNEAU, ALASKA
AURORA HARBOR REBUILD - PHASE I
CONTRACT NO. DH 12-160

SHEET TITLE:
OVERALL FLOAT PLAN AND PILE LAYOUT

PND PROJECT NO.: 122055

5.01
SHEET 39 OF 143

FLOAT PILE SCHEDULE

PILE #	LOCATION	MIN. PILE LENGTH (FT)	PILE SIZE	TIP TYPE
1	H1	70'	12¾"ø x 0.500t	OPEN SHOE
2	H2	70'	12¾"ø x 0.500t	OPEN SHOE
3	H3	70'	12¾"ø x 0.500t	OPEN SHOE
4	H4	70'	12¾"ø x 0.500t	OPEN SHOE
5	H5	70'	12¾"ø x 0.500t	OPEN SHOE
6	H6	70'	12¾"ø x 0.500t	OPEN SHOE
7	H7	70'	12¾"ø x 0.500t	OPEN SHOE
8	H8	70'	12¾"ø x 0.500t	OPEN SHOE
9	H9	70'	12¾"ø x 0.500t	OPEN SHOE
10	H10	70'	12¾"ø x 0.500t	OPEN SHOE
11	H11	70'	12¾"ø x 0.500t	OPEN SHOE
12	H12	70'	12¾"ø x 0.500t	OPEN SHOE
13	H13	70'	12¾"ø x 0.500t	OPEN SHOE
14	H14	70'	12¾"ø x 0.500t	OPEN SHOE
15	H15	70'	12¾"ø x 0.500t	OPEN SHOE
16	H16	70'	12¾"ø x 0.500t	OPEN SHOE
17	H17	70'	12¾"ø x 0.500t	OPEN SHOE
18	H18	70'	12¾"ø x 0.500t	OPEN SHOE
19	H19	70'	12¾"ø x 0.500t	OPEN SHOE
20	AM1	80'	16"ø x 0.500t	OPEN SHOE
21	AM2	80'	16"ø x 0.500t	OPEN SHOE
22	AM3	80'	16"ø x 0.500t	OPEN SHOE
23	AM4	80'	16"ø x 0.500t	OPEN SHOE
24	AM5	80'	16"ø x 0.500t	OPEN SHOE
25	BM1	80'	16"ø x 0.500t	OPEN SHOE
26	BM2	80'	16"ø x 0.500t	OPEN SHOE
27	BM3	80'	16"ø x 0.500t	OPEN SHOE
28	BM4	80'	16"ø x 0.500t	OPEN SHOE
29	BM5	80'	16"ø x 0.500t	OPEN SHOE
30	BM6	80'	16"ø x 0.500t	OPEN SHOE
31	BM7	80'	16"ø x 0.500t	OPEN SHOE
32	CM1	70'	12¾"ø x 0.500t	OPEN SHOE
33	CM2	70'	12¾"ø x 0.500t	OPEN SHOE
34	CM3	70'	12¾"ø x 0.500t	OPEN SHOE
35	CM4	70'	12¾"ø x 0.500t	OPEN SHOE
36	CM5	70'	12¾"ø x 0.500t	OPEN SHOE
37	CM6	70'	12¾"ø x 0.500t	OPEN SHOE
38	CM7	70'	12¾"ø x 0.500t	OPEN SHOE
39	CM8	70'	12¾"ø x 0.500t	OPEN SHOE
40	DM1	70'	12¾"ø x 0.500t	OPEN SHOE
41	DM2	70'	12¾"ø x 0.500t	OPEN SHOE
42	DM3	70'	12¾"ø x 0.500t	OPEN SHOE
43	DM4	70'	12¾"ø x 0.500t	OPEN SHOE
44	DM5	70'	12¾"ø x 0.500t	OPEN SHOE
45	DM6	70'	12¾"ø x 0.500t	OPEN SHOE
46	DM7	70'	12¾"ø x 0.500t	OPEN SHOE
47	DM8	70'	12¾"ø x 0.500t	OPEN SHOE
48	DM9	70'	12¾"ø x 0.500t	OPEN SHOE
49	DM10	70'	12¾"ø x 0.500t	OPEN SHOE

FLOAT PILE SCHEDULE (CONT.)

PILE #	LOCATION	MIN. PILE LENGTH (FT)	PILE SIZE	TIP TYPE
50	AF1	80'	16"ø x 0.500t	OPEN SHOE
51	AF2	80'	16"ø x 0.500t	OPEN SHOE
52	AF3	80'	16"ø x 0.500t	OPEN SHOE
53	AF4	80'	16"ø x 0.500t	OPEN SHOE
54	AF5	80'	16"ø x 0.500t	OPEN SHOE
55	AF6	80'	16"ø x 0.500t	OPEN SHOE
56	AF7	SEE TABLE NEXT SHEET		
57	AF8			
58	AF9			
59	AF10			
60	AF11			
61	AF12			
62	AF13	80'	16"ø x 0.500t	OPEN SHOE
63	AF14	80'	16"ø x 0.500t	OPEN SHOE
64	AF15	80'	16"ø x 0.500t	OPEN SHOE
65	AF16	80'	16"ø x 0.500t	OPEN SHOE
66	AF17	80'	16"ø x 0.500t	OPEN SHOE
67	AF18	80'	16"ø x 0.500t	OPEN SHOE
68	AF19	80'	16"ø x 0.500t	OPEN SHOE
69	AF20	80'	16"ø x 0.500t	OPEN SHOE
70	BF1	80'	16"ø x 0.500t	OPEN SHOE
71	BF2	80'	16"ø x 0.500t	OPEN SHOE
72	BF3	80'	16"ø x 0.500t	OPEN SHOE
73	BF4	80'	16"ø x 0.500t	OPEN SHOE
74	BF5	80'	16"ø x 0.500t	OPEN SHOE
75	BF6	80'	16"ø x 0.500t	OPEN SHOE
76	BF7	80'	16"ø x 0.500t	OPEN SHOE
77	BF8	80'	16"ø x 0.500t	OPEN SHOE
78	BF9	80'	16"ø x 0.500t	OPEN SHOE
79	BF10	80'	16"ø x 0.500t	OPEN SHOE
80	BF11	80'	16"ø x 0.500t	OPEN SHOE
81	BF12	80'	16"ø x 0.500t	OPEN SHOE
82	BF13	80'	16"ø x 0.500t	OPEN SHOE
83	BF14	80'	16"ø x 0.500t	OPEN SHOE
84	BF15	80'	16"ø x 0.500t	OPEN SHOE
85	BF16	80'	16"ø x 0.500t	OPEN SHOE
86	CF1	70'	12¾"ø x 0.500t	OPEN SHOE
87	CF2	70'	12¾"ø x 0.500t	OPEN SHOE
88	CF3	70'	12¾"ø x 0.500t	OPEN SHOE
89	CF4	70'	12¾"ø x 0.500t	OPEN SHOE
90	CF5	70'	12¾"ø x 0.500t	OPEN SHOE
91	CF6	70'	12¾"ø x 0.500t	OPEN SHOE
92	CF7	70'	12¾"ø x 0.500t	OPEN SHOE
93	CF8	70'	12¾"ø x 0.500t	OPEN SHOE
94	CF9	70'	12¾"ø x 0.500t	OPEN SHOE
95	CF10	70'	12¾"ø x 0.500t	OPEN SHOE
96	CF11	70'	12¾"ø x 0.500t	OPEN SHOE
97	CF12	70'	12¾"ø x 0.500t	OPEN SHOE

NOTES:
1. SEE "OVERALL FLOAT PLAN AND PILE LAYOUT" FOR LOCATION OF PILES WITHIN FLOAT SYSTEM.

CITY & BOROUGH OF JUNEAU DOCKS & HARBORS

REVISIONS

REV.	DATE	DESCRIPTION	DWN.	CKD.	APP.

PND ENGINEERS, INC.
9360 Glacier Highway, Ste. 100
Juneau, Alaska 99801
Phone: 907-586-2093
Fax: 907-586-2099
www.pndengineers.com

DESIGN: MS CHECKED: JLD
DRAWN: WRB APPROVED: CRS
SCALE: NTS
DATE: 2/28/14

STATE OF ALASKA — 4-30-14 — John L. DeWitt CE-8547 — REGISTERED PROFESSIONAL ENGINEER

CITY & BOROUGH OF JUNEAU, ALASKA
AURORA HARBOR REBUILD - PHASE I
CONTRACT NO. DH 12-160

SHEET TITLE: FLOAT PILE SCHEDULE

5.02
SHEET 40 OF 143

PND PROJECT NO.: 122055

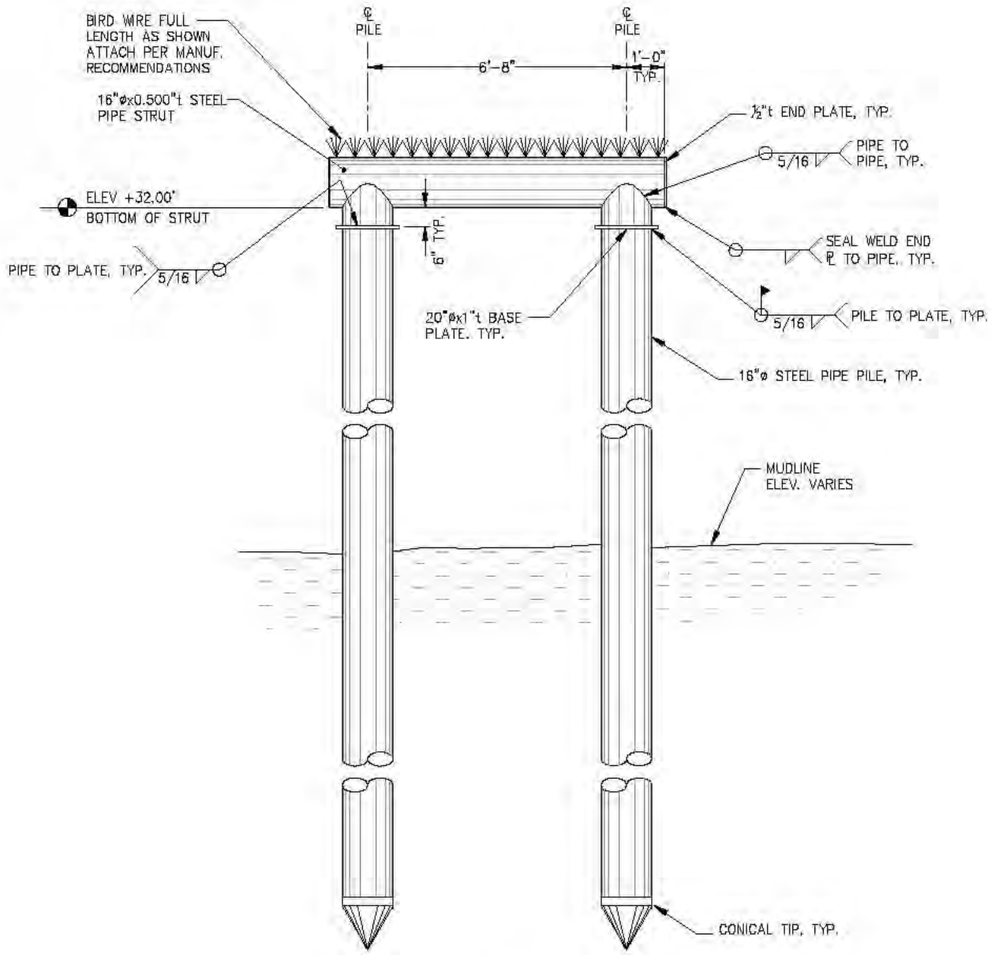

TYPICAL MOORING PILE FRAME DETAILS

MOORING PILE FRAME SCHEDULE						
PILES	ULTIMATE COMPRESSION LOAD (KIPS)	ULTIMATE TENSION LOAD (KIPS)	PILE DIAMETER (IN)	PILE WALL THICKNESS (IN)	REQUIRED FURNISHED LENGTH (FT)	PILE TIP
AF7–AF12	70	–55	16	0.500	100	CONICAL TIP

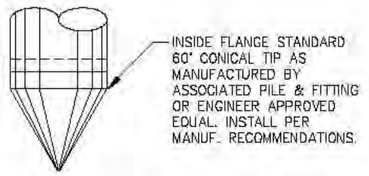

CONICAL TIP DETAIL

(APPLIES ONLY TO PILE LOCATIONS AF7 THRU AF12, 6 TOTAL)

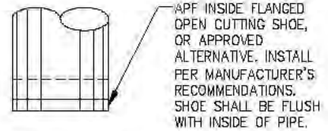

OPEN SHOE DETAIL

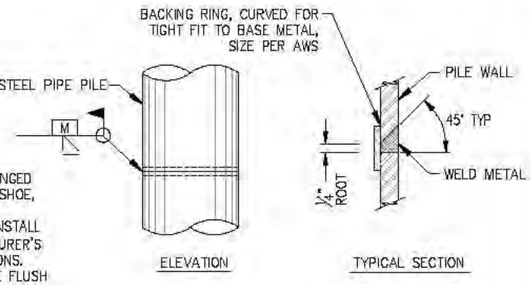

TYPICAL PILE SPLICE WELD

TYPICAL FOR ALL SHOP & FIELD PIPE PILE SPLICES. CONTRACTOR MAY SUBMIT ALTERNATIVE PILE SPLICE DETAIL FOR ENGINEER APPROVAL.

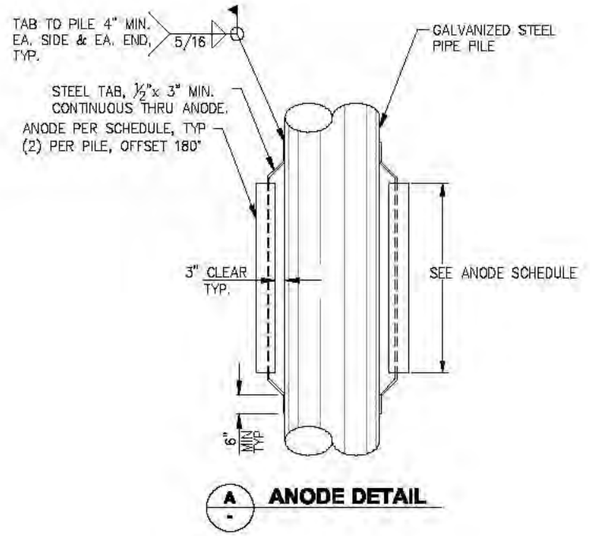

A ANODE DETAIL

ANODE SCHEDULE – ADDITIVE ALT B				
PILE DIAMETER	TYPE	DIMENSIONS	NOMINAL WT.	QUANTITY
12¾"ø	A	6"x6"x60"	216 LBS.	98
16"ø	B	6"x6"x72"	260 LBS.	96

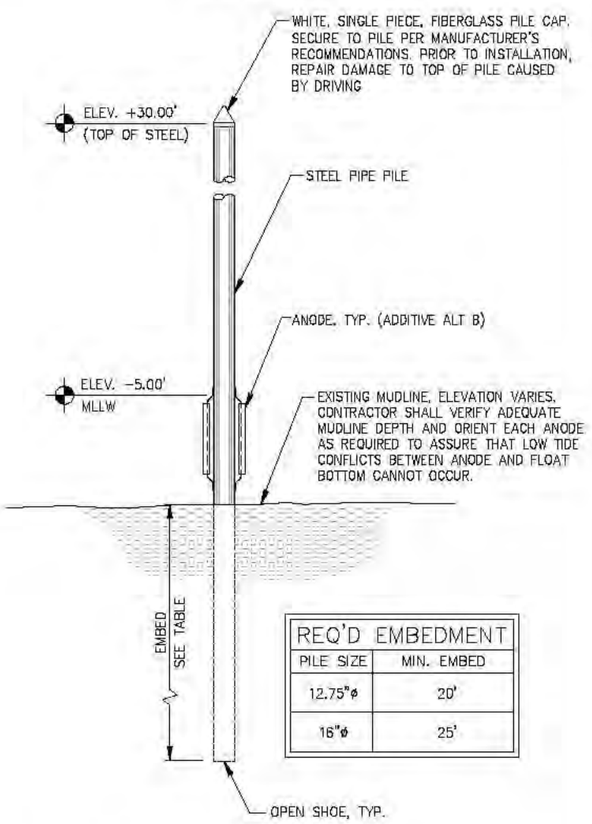

REQ'D EMBEDMENT	
PILE SIZE	MIN. EMBED
12.75"ø	20'
16"ø	25'

TYPICAL PILE DETAIL - STANDARD INSTALLATION

REVISIONS

REV.	DATE	DESCRIPTION	DWN.	CKD.	APP.

PND ENGINEERS, INC.
9360 Glacier Highway, Ste. 100
Juneau, Alaska 99801
Phone: 907-586-2093
Fax: 907-586-2099
www.pndengineers.com

DESIGN: MS CHECKED: JLD
DRAWN: WRB APPROVED: CRS
SCALE: NTS
DATE: 2/28/14

CITY & BOROUGH OF JUNEAU, ALASKA
AURORA HARBOR REBUILD - PHASE I
CONTRACT NO. DH 12-160

SHEET TITLE: FLOAT PILE DETAILS

PND PROJECT NO.: 122055

5.03
SHEET 41 OF 143

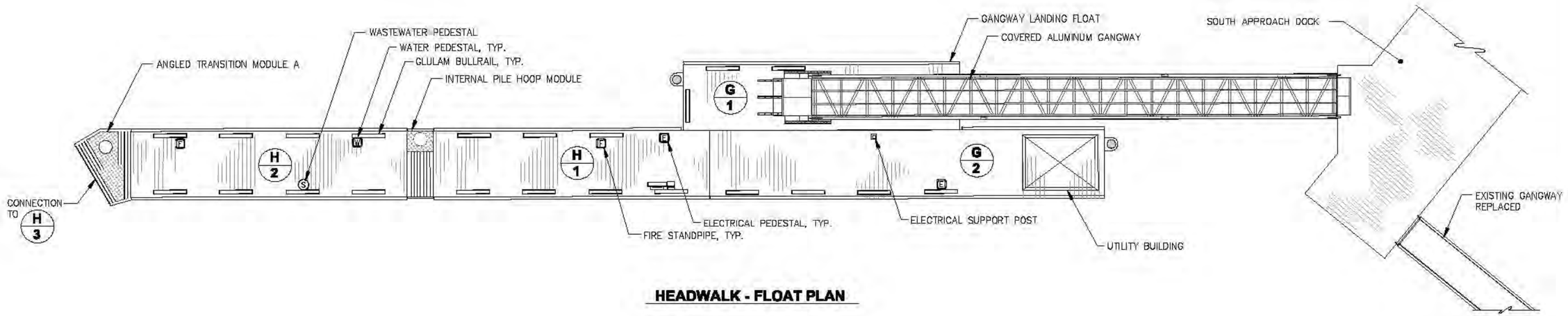

HEADWALK - FLOAT PLAN

NOTE: LIFE RING AND FIRE EXTINGUISHER CABINET LOCATIONS SHOWN ARE APPROXIMATE. FIELD LOCATE PER OWNER/ENGINEER DIRECTION.

NOTE: PORTIONS OF DECKING MAY NEED TO BE INSTALLED AFTER ELECTRICAL CABLES AND/OR PEDESTALS. FABRICATOR SHALL COORDINATE w/ GENERAL CONTRACTOR AND ELECTRICAL CONTRACTOR AS REQUIRED.

LEGEND:

- E = ELECTRICAL PEDESTAL
- = FIRE EXTINGUISHER AND LIFE RING
- F = FIRE STANDPIPE
- W = WATER PEDESTAL
- = ELECTRICAL SUPPORT POST
- S = WASTEWATER PEDESTAL

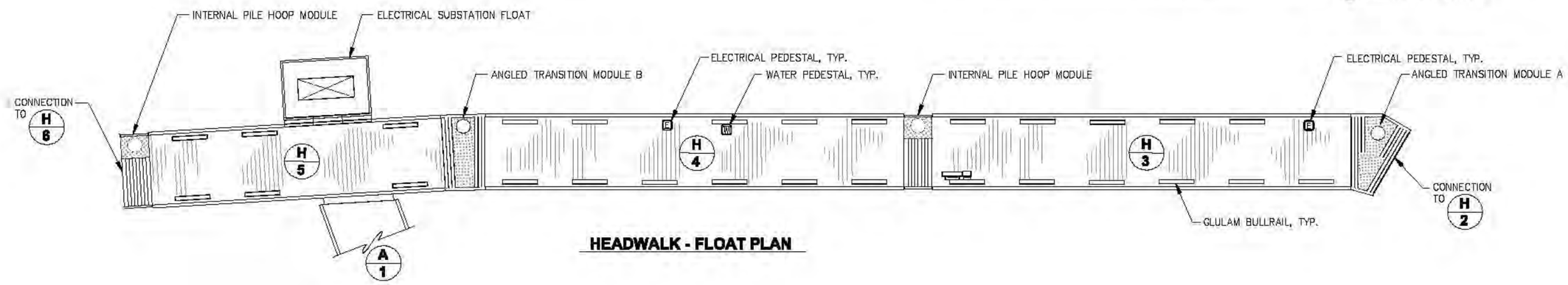

HEADWALK - FLOAT PLAN

REVISIONS

REV.	DATE	DESCRIPTION	DWN.	CKD.	APP.

P N D ENGINEERS, INC.
9360 Glacier Highway, Ste. 100
Juneau, Alaska 99801
Phone: 907-586-2093
Fax: 907-586-2099
www.pndengineers.com

DESIGN: MS CHECKED: JLD
DRAWN: WRB APPROVED: CRS
SCALE: SCALE IN FEET 0 8 16 FT.

STATE OF ALASKA — John L. DeMuth CE-8847 — REGISTERED PROFESSIONAL ENGINEER
DATE: 2/28/14

CITY & BOROUGH OF JUNEAU, ALASKA
AURORA HARBOR REBUILD - PHASE I
CONTRACT NO. DH 12-160

SHEET TITLE: **HEADWALK FLOAT PLAN**

PND PROJECT NO.: 122055

5.04
SHEET 42 OF 143

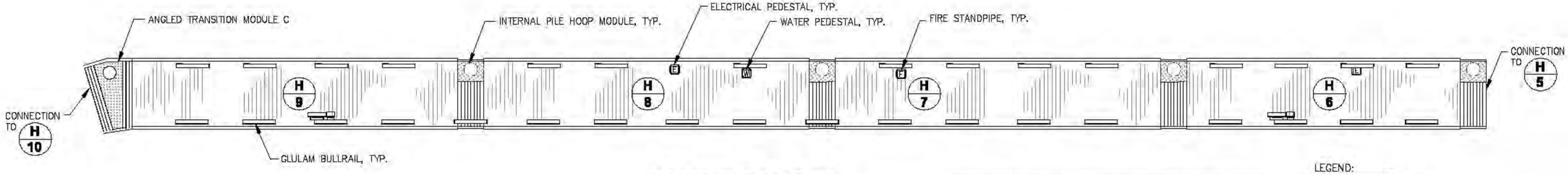

HEADWALK - FLOAT PLAN

NOTE: LIFE RING AND FIRE EXTINGUISHER CABINET LOCATIONS SHOWN ARE APPROXIMATE. FIELD LOCATE PER OWNER/ENGINEER DIRECTION.

NOTE: PORTIONS OF DECKING MAY NEED TO BE INSTALLED AFTER ELECTRICAL CABLES AND/OR PEDESTALS. FABRICATOR SHALL COORDINATE w/ GENERAL CONTRACTOR AND ELECTRICAL CONTRACTOR AS REQUIRED.

LEGEND:

- E = ELECTRICAL PEDESTAL
- = FIRE EXTINGUISHER AND LIFE RING
- F = FIRE STANDPIPE
- W = WATER PEDESTAL
- = ELECTRICAL SUPPORT POST

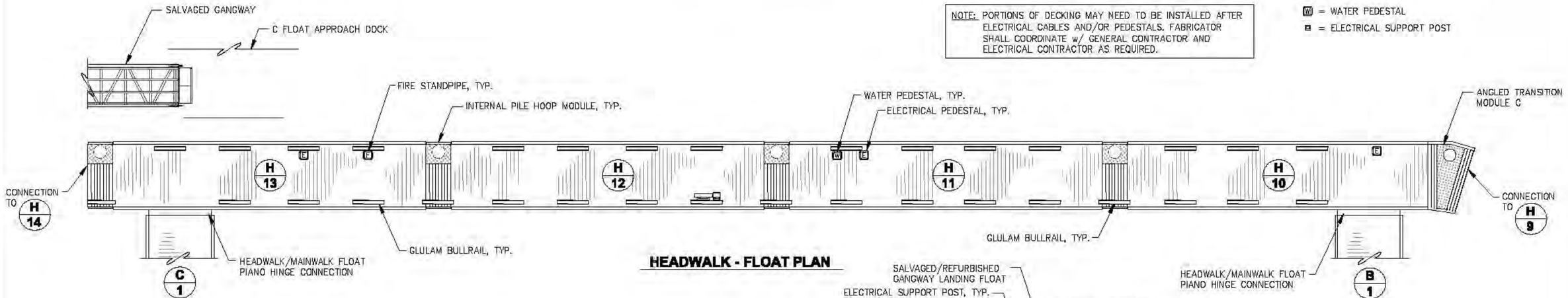

HEADWALK - FLOAT PLAN

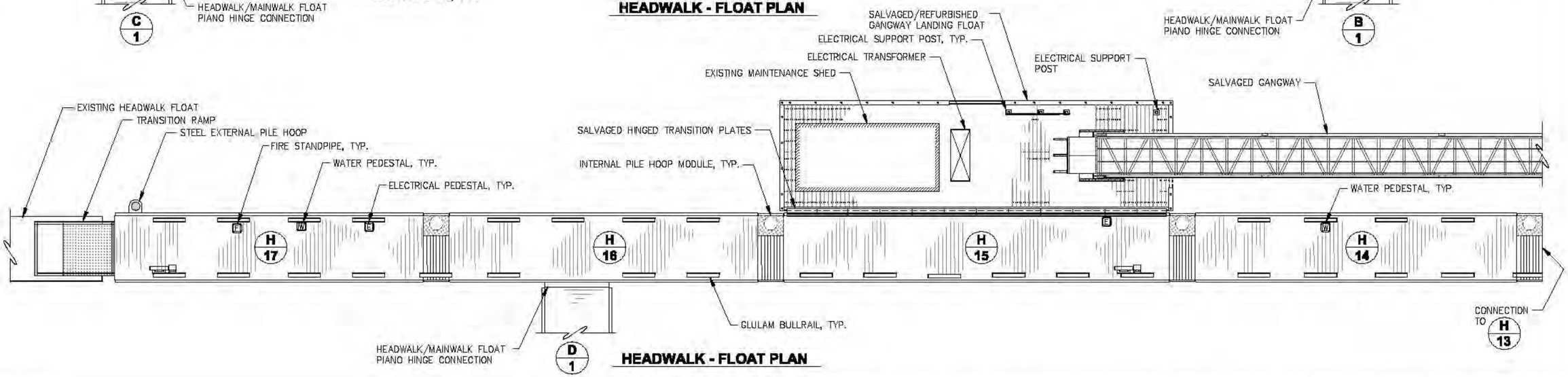

HEADWALK - FLOAT PLAN

REVISIONS

REV.	DATE	DESCRIPTION	DWN.	CKD.	APP.

PND ENGINEERS, INC.
9360 Glacier Highway, Ste. 100
Juneau, Alaska 99801
Phone: 907-586-2093
Fax: 907-586-2099
www.pndengineers.com

DESIGN: MS CHECKED: JLD
DRAWN: WRB APPROVED: CRS
SCALE: SCALE IN FEET 0 8 16 FT.
DATE: 2/28/14

STATE OF ALASKA — John L. Dalrymple CE-8847 — REGISTERED PROFESSIONAL ENGINEER

CITY & BOROUGH OF JUNEAU, ALASKA
AURORA HARBOR REBUILD - PHASE I
CONTRACT NO. DH 12-160

SHEET TITLE: **HEADWALK FLOAT PLAN**

PND PROJECT NO.: 122055

5.05
SHEET 43 OF 143

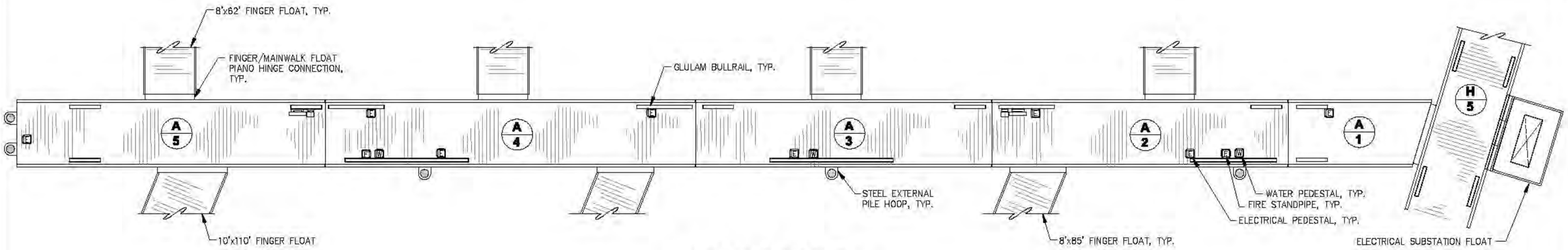

A FLOAT - FLOAT PLAN

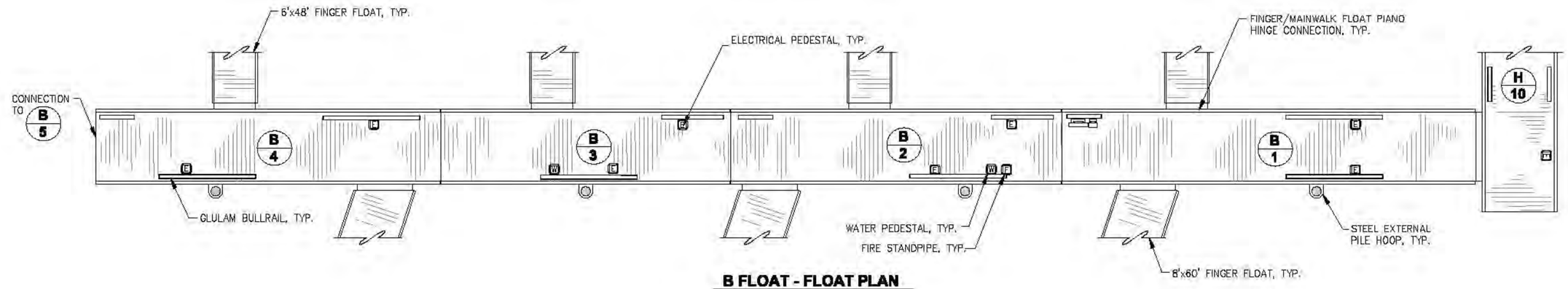

B FLOAT - FLOAT PLAN

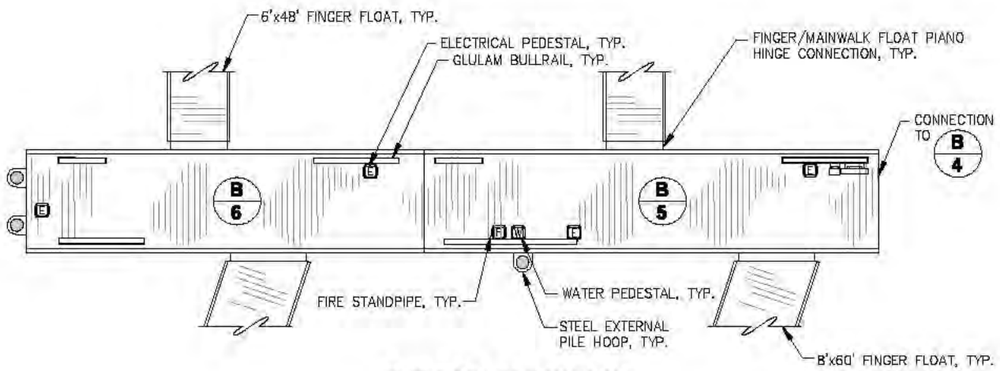

B FLOAT - FLOAT PLAN

NOTE: LIFE RING AND FIRE EXTINGUISHER CABINET LOCATIONS SHOWN ARE APPROXIMATE. FIELD LOCATE PER OWNER/ENGINEER DIRECTION.

NOTE: PORTIONS OF DECKING MAY NEED TO BE INSTALLED AFTER ELECTRICAL CABLES AND/OR PEDESTALS. FABRICATOR SHALL COORDINATE w/ GENERAL CONTRACTOR AND ELECTRICAL CONTRACTOR AS REQUIRED.

LEGEND:

- E = ELECTRICAL PEDESTAL
- = FIRE EXTINGUISHER AND LIFE RING
- F = FIRE STANDPIPE
- W = WATER PEDESTAL

CITY & BOROUGH OF JUNEAU DOCKS & HARBORS

REVISIONS

REV.	DATE	DESCRIPTION	DWN.	CKD.	APP.

PND ENGINEERS, INC.
9360 Glacier Highway, Ste. 100
Juneau, Alaska 99801
Phone: 907-586-2093
Fax: 907-586-2099
www.pndengineers.com

DESIGN: MS CHECKED: JLD
DRAWN: WRB APPROVED: CRS
SCALE: SCALE IN FEET 0 8 16 FT.

STATE OF ALASKA — John L. Dahlin — CE-8847 — REGISTERED PROFESSIONAL ENGINEER
DATE: 2/28/14

CITY & BOROUGH OF JUNEAU, ALASKA
AURORA HARBOR REBUILD - PHASE I
CONTRACT NO. DH 12-160

SHEET TITLE:
MAINWALK FLOAT PLAN
A FLOAT AND B FLOAT

PND PROJECT NO.: 122055

5.06
SHEET 44 OF 143

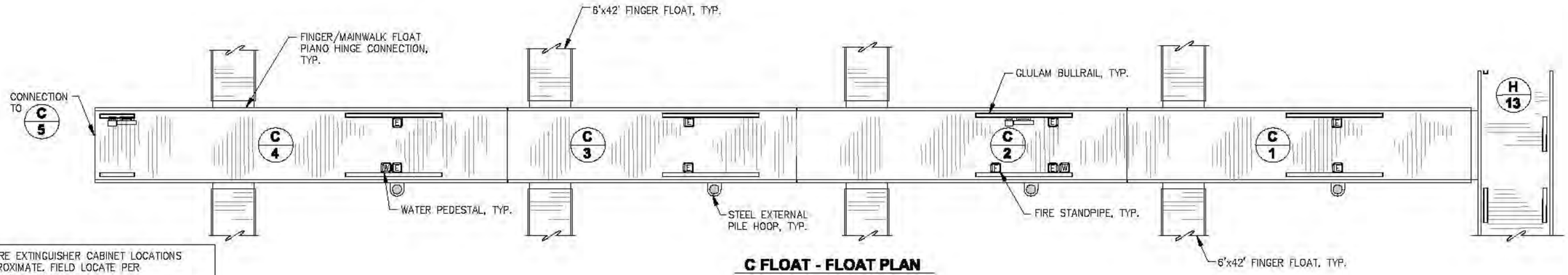

C FLOAT - FLOAT PLAN

NOTE: LIFE RING AND FIRE EXTINGUISHER CABINET LOCATIONS SHOWN ARE APPROXIMATE. FIELD LOCATE PER OWNER/ENGINEER DIRECTION.

NOTE: PORTIONS OF DECKING MAY NEED TO BE INSTALLED AFTER ELECTRICAL CABLES AND/OR PEDESTALS. FABRICATOR SHALL COORDINATE w/ GENERAL CONTRACTOR AND ELECTRICAL CONTRACTOR AS REQUIRED.

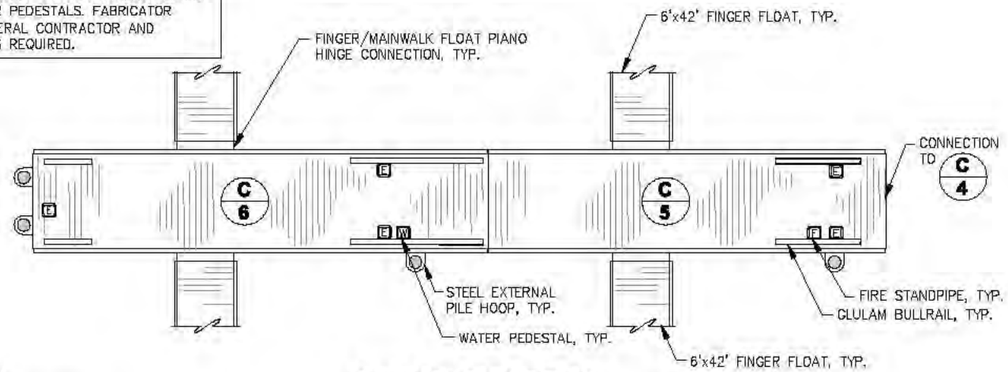

C FLOAT - FLOAT PLAN

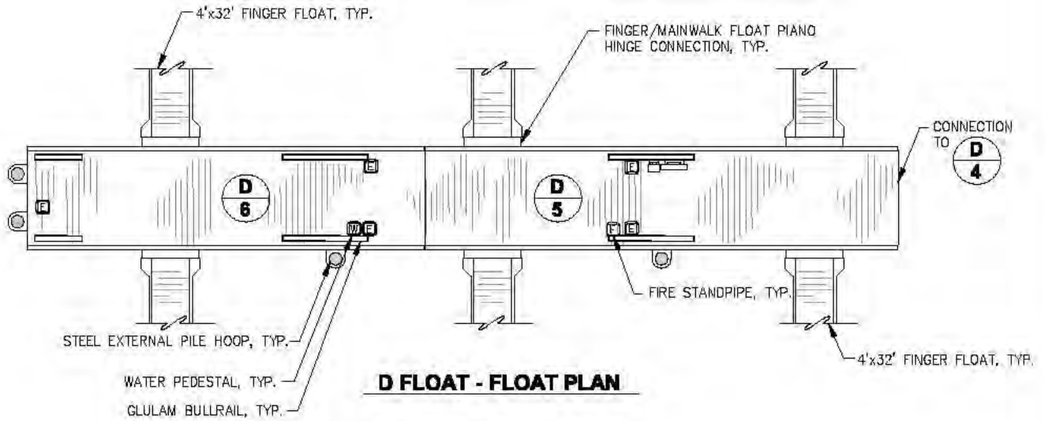

D FLOAT - FLOAT PLAN

LEGEND:

- E = ELECTRICAL PEDESTAL
- = FIRE EXTINGUISHER AND LIFE RING
- F = FIRE STANDPIPE
- W = WATER PEDESTAL

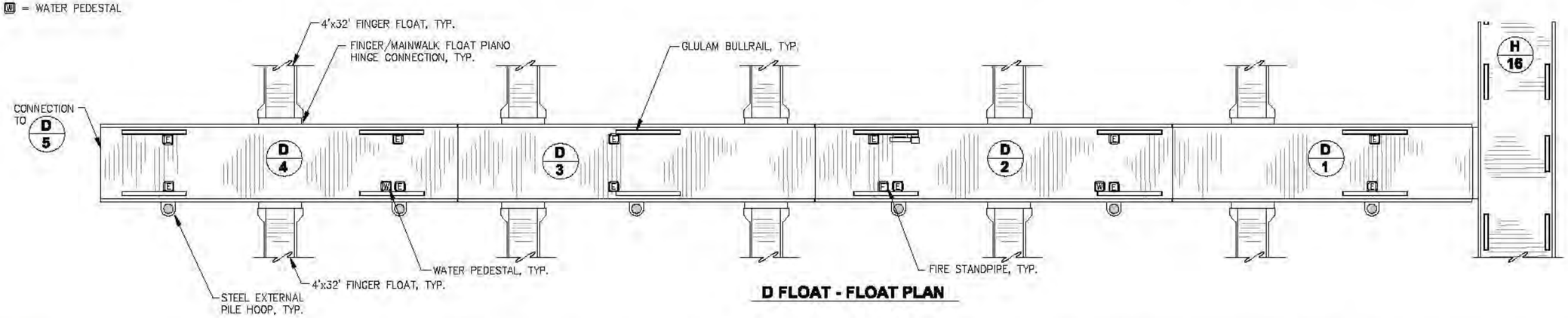

D FLOAT - FLOAT PLAN

REVISIONS

REV.	DATE	DESCRIPTION	DWN.	CKD.	APP.

PND ENGINEERS, INC.
9360 Glacier Highway, Ste. 100
Juneau, Alaska 99801
Phone: 907-586-2093
Fax: 907-586-2099
www.pndengineers.com

DESIGN: MS CHECKED: JLD
DRAWN: WRB APPROVED: CRS
SCALE: SCALE IN FEET 0 8 16 FT.

STATE OF ALASKA — JOHN L. DAHLIN — CE-8847 — REGISTERED PROFESSIONAL ENGINEER
DATE: 2/28/14

CITY & BOROUGH OF JUNEAU, ALASKA
AURORA HARBOR REBUILD - PHASE I
CONTRACT NO. DH 12-160

SHEET TITLE:
MAINWALK FLOAT PLAN
C FLOAT AND D FLOAT

PND PROJECT NO.: 122055

5.07
SHEET 45 OF 143

MODULE: H-1	LENGTH	WIDTH	HEIGHT	QUANTITY
ITEM DESCRIPTION				
HDPE FLOTATION TUB	48"	36"	32"	10 EA.
HDPE BALLAST TANK	48"	24"	24"	8 EA.
POLYSTYRENE BILLET	60"	62"	13"	2 EA.
POLYSTYRENE BILLET	60"	62"	17"	2 EA.

MODULE: H-2	LENGTH	WIDTH	HEIGHT	QUANTITY
ITEM DESCRIPTION				
HDPE FLOTATION TUB	48"	36"	32"	10 EA.
HDPE BALLAST TANK	48"	24"	24"	8 EA.
POLYSTYRENE BILLET	60"	62"	12"	2 EA.
POLYSTYRENE BILLET	60"	62"	15"	2 EA.

MODULE: H-3	LENGTH	WIDTH	HEIGHT	QUANTITY
ITEM DESCRIPTION				
HDPE FLOTATION TUB	48"	36"	32"	14 EA.
HDPE BALLAST TANK	48"	24"	24"	12 EA.
POLYSTYRENE BILLET	60"	62"	13"	4 EA.
POLYSTYRENE BILLET	60"	62"	16"	2 EA.

MODULE: H-4	LENGTH	WIDTH	HEIGHT	QUANTITY
ITEM DESCRIPTION				
HDPE FLOTATION TUB	48"	36"	32"	14 EA.
HDPE BALLAST TANK	48"	24"	24"	12 EA.
POLYSTYRENE BILLET	60"	62"	13"	4 EA.
POLYSTYRENE BILLET	60"	62"	16"	2 EA.

MODULE: H-5	LENGTH	WIDTH	HEIGHT	QUANTITY
ITEM DESCRIPTION				
HDPE FLOTATION TUB	48"	36"	32"	10 EA.
HDPE BALLAST TANK	48"	24"	24"	8 EA.
POLYSTYRENE BILLET	60"	62"	13"	2 EA.
POLYSTYRENE BILLET	60"	62"	17"	2 EA.

MODULE: H-6	LENGTH	WIDTH	HEIGHT	QUANTITY
ITEM DESCRIPTION				
HDPE FLOTATION TUB	48"	36"	32"	10 EA.
HDPE BALLAST TANK	48"	24"	24"	8 EA.
POLYSTYRENE BILLET	60"	62"	14"	2 EA.
POLYSTYRENE BILLET	60"	62"	18"	2 EA.

MODULE: H-7	LENGTH	WIDTH	HEIGHT	QUANTITY
ITEM DESCRIPTION				
HDPE FLOTATION TUB	48"	36"	24"	10 EA.
HDPE BALLAST TANK	48"	24"	24"	8 EA.
POLYSTYRENE BILLET	60"	62"	16"	2 EA.
POLYSTYRENE BILLET	60"	62"	20"	2 EA.

MODULE: H-8	LENGTH	WIDTH	HEIGHT	QUANTITY
ITEM DESCRIPTION				
HDPE FLOTATION TUB	48"	36"	24"	10 EA.
HDPE BALLAST TANK	48"	24"	24"	8 EA.
POLYSTYRENE BILLET	60"	62"	17"	2 EA.
POLYSTYRENE BILLET	60"	62"	21"	2 EA.

MODULE: H-9	LENGTH	WIDTH	HEIGHT	QUANTITY
ITEM DESCRIPTION				
HDPE FLOTATION TUB	48"	36"	24"	10 EA.
HDPE BALLAST TANK	48"	24"	24"	8 EA.
POLYSTYRENE BILLET	60"	62"	15"	2 EA.
POLYSTYRENE BILLET	60"	62"	20"	2 EA.

MODULE: H-10	LENGTH	WIDTH	HEIGHT	QUANTITY
ITEM DESCRIPTION				
HDPE FLOTATION TUB	48"	36"	24"	10 EA.
HDPE BALLAST TANK	48"	24"	24"	8 EA.
POLYSTYRENE BILLET	60"	62"	16"	2 EA.
POLYSTYRENE BILLET	60"	62"	20"	2 EA.

MODULE: H-11	LENGTH	WIDTH	HEIGHT	QUANTITY
ITEM DESCRIPTION				
HDPE FLOTATION TUB	48"	36"	24"	10 EA.
HDPE BALLAST TANK	48"	24"	24"	8 EA.
POLYSTYRENE BILLET	60"	62"	16"	2 EA.
POLYSTYRENE BILLET	60"	62"	20"	2 EA.

MODULE: H-12	LENGTH	WIDTH	HEIGHT	QUANTITY
ITEM DESCRIPTION				
HDPE FLOTATION TUB	48"	36"	24"	10 EA.
HDPE BALLAST TANK	48"	24"	24"	8 EA.
POLYSTYRENE BILLET	60"	62"	14"	2 EA.
POLYSTYRENE BILLET	60"	62"	18"	2 EA.

MODULE: H-13	LENGTH	WIDTH	HEIGHT	QUANTITY
ITEM DESCRIPTION				
HDPE FLOTATION TUB	48"	36"	24"	10 EA.
HDPE BALLAST TANK	48"	24"	24"	8 EA.
POLYSTYRENE BILLET	60"	62"	16"	2 EA.
POLYSTYRENE BILLET	60"	62"	20"	2 EA.

MODULE: H-14	LENGTH	WIDTH	HEIGHT	QUANTITY
ITEM DESCRIPTION				
HDPE FLOTATION TUB	48"	36"	24"	10 EA.
HDPE BALLAST TANK	48"	24"	24"	8 EA.
POLYSTYRENE BILLET	60"	62"	16"	2 EA.
POLYSTYRENE BILLET	60"	62"	20"	2 EA.

MODULE: H-15	LENGTH	WIDTH	HEIGHT	QUANTITY
ITEM DESCRIPTION				
HDPE FLOTATION TUB	48"	36"	32"	14 EA.
HDPE BALLAST TANK	48"	24"	24"	12 EA.
POLYSTYRENE BILLET	60"	62"	14"	4 EA.
POLYSTYRENE BILLET	60"	62"	17"	2 EA.

MODULE: H-16	LENGTH	WIDTH	HEIGHT	QUANTITY
ITEM DESCRIPTION				
HDPE FLOTATION TUB	48"	36"	24"	10 EA.
HDPE BALLAST TANK	48"	24"	24"	8 EA.
POLYSTYRENE BILLET	60"	62"	16"	2 EA.
POLYSTYRENE BILLET	60"	62"	20"	2 EA.

MODULE: H-17	LENGTH	WIDTH	HEIGHT	QUANTITY
ITEM DESCRIPTION				
HDPE FLOTATION TUB	48"	36"	24"	10 EA.
HDPE BALLAST TANK	48"	24"	24"	8 EA.
POLYSTYRENE BILLET	60"	62"	16"	2 EA.
POLYSTYRENE BILLET	60"	62"	20"	2 EA.

MODULE: A-1	LENGTH	WIDTH	HEIGHT	QUANTITY
ITEM DESCRIPTION				
HDPE FLOTATION TUB	48"	36"	32"	4 EA.
HDPE FLOTATION TUB	48"	36"	20"	2 EA.
HDPE BALLAST TANK	48"	24"	24"	2 EA.
POLYSTYRENE BILLET	60"	62"	20"	1 EA.

MODULE: A-2	LENGTH	WIDTH	HEIGHT	QUANTITY
ITEM DESCRIPTION				
HDPE FLOTATION TUB	48"	48"	24"	10 EA.
HDPE BALLAST TANK	48"	24"	24"	8 EA.
POLYSTYRENE BILLET	60"	62"	18"	2 EA.
POLYSTYRENE BILLET	60"	62"	22"	2 EA.

MODULE: A-3	LENGTH	WIDTH	HEIGHT	QUANTITY
ITEM DESCRIPTION				
HDPE FLOTATION TUB	48"	48"	24"	10 EA.
HDPE BALLAST TANK	48"	24"	24"	8 EA.
POLYSTYRENE BILLET	60"	62"	17"	2 EA.
POLYSTYRENE BILLET	60"	62"	21"	2 EA.

MODULE: A-4	LENGTH	WIDTH	HEIGHT	QUANTITY
ITEM DESCRIPTION				
HDPE FLOTATION TUB	48"	36"	32"	14 EA.
HDPE BALLAST TANK	48"	24"	24"	12 EA.
POLYSTYRENE BILLET	60"	62"	15"	4 EA.
POLYSTYRENE BILLET	60"	62"	18"	2 EA.

MODULE: A-5	LENGTH	WIDTH	HEIGHT	QUANTITY
ITEM DESCRIPTION				
HDPE FLOTATION TUB	48"	48"	24"	10 EA.
HDPE BALLAST TANK	48"	24"	24"	8 EA.
POLYSTYRENE BILLET	60"	62"	17"	2 EA.
POLYSTYRENE BILLET	60"	62"	21"	1 EA.
POLYSTYRENE BILLET	60"	62"	26"	1 EA.

MODULE: B-1	LENGTH	WIDTH	HEIGHT	QUANTITY
ITEM DESCRIPTION				
HDPE FLOTATION TUB	48"	36"	32"	14 EA.
HDPE BALLAST TANK	48"	24"	24"	12 EA.
POLYSTYRENE BILLET	60"	62"	14"	4 EA.
POLYSTYRENE BILLET	60"	62"	17"	2 EA.

MODULE: B-2	LENGTH	WIDTH	HEIGHT	QUANTITY
ITEM DESCRIPTION				
HDPE FLOTATION TUB	48"	48"	24"	10 EA.
HDPE BALLAST TANK	48"	24"	24"	8 EA.
POLYSTYRENE BILLET	60"	62"	18"	2 EA.
POLYSTYRENE BILLET	60"	62"	22"	2 EA.

MODULE: B-3	LENGTH	WIDTH	HEIGHT	QUANTITY
ITEM DESCRIPTION				
HDPE FLOTATION TUB	48"	36"	32"	10 EA.
HDPE BALLAST TANK	48"	24"	24"	8 EA.
POLYSTYRENE BILLET	60"	62"	13"	2 EA.
POLYSTYRENE BILLET	60"	62"	17"	2 EA.

MODULE: B-4	LENGTH	WIDTH	HEIGHT	QUANTITY
ITEM DESCRIPTION				
HDPE FLOTATION TUB	48"	48"	24"	10 EA.
HDPE BALLAST TANK	48"	24"	24"	8 EA.
POLYSTYRENE BILLET	60"	62"	18"	2 EA.
POLYSTYRENE BILLET	60"	62"	22"	2 EA.

MODULE: B-5	LENGTH	WIDTH	HEIGHT	QUANTITY
ITEM DESCRIPTION				
HDPE FLOTATION TUB	48"	48"	24"	10 EA.
HDPE BALLAST TANK	48"	24"	24"	8 EA.
POLYSTYRENE BILLET	60"	62"	17"	2 EA.
POLYSTYRENE BILLET	60"	62"	21"	2 EA.

MODULE: B-6	LENGTH	WIDTH	HEIGHT	QUANTITY
ITEM DESCRIPTION				
HDPE FLOTATION TUB	48"	36"	32"	10 EA.
HDPE BALLAST TANK	48"	24"	24"	8 EA.
POLYSTYRENE BILLET	60"	62"	13"	2 EA.
POLYSTYRENE BILLET	60"	62"	17"	1 EA.
POLYSTYRENE BILLET	60"	62"	22"	1 EA.

** NOTE: UNLESS OTHERWISE NOTED, LOCATE THE 2 DEEPEST POLYSTYRENE BILLETS AT EACH END OF THE FLOAT MODULE AS SHOWN ON THE FLOAT UNIT ELEVATION.

** NOTE: BALLAST TANK WALL THICKNESS TO BE 0.375".

** NOTE: FLOTATION TUB WALL THICKNESS TO BE 0.175"

CITY & BOROUGH OF JUNEAU DOCKS & HARBORS

REVISIONS

REV.	DATE	DESCRIPTION	DWN.	CKD.	APP.

PND ENGINEERS, INC.
9360 Glacier Highway, Ste. 100
Juneau, Alaska 99801
Phone: 907-586-2093
Fax: 907-586-2099
www.pndengineers.com

DESIGN: MS CHECKED: JLD
DRAWN: DRD APPROVED: CRS
SCALE:

STATE OF ALASKA — John L. DeWitt — CE-8847 — REGISTERED PROFESSIONAL ENGINEER
DATE: 2/28/14

CITY & BOROUGH OF JUNEAU, ALASKA
AURORA HARBOR REBUILD - PHASE I
CONTRACT NO. DH 12-160

SHEET TITLE:
FLOTATION SCHEDULES

PND PROJECT NO.: 122055

5.08
SHEET 48 OF 143

MODULE: C-1 ITEM DESCRIPTION	LENGTH	WIDTH	HEIGHT	QUANTITY
HDPE FLOTATION TUB	48"	48"	24"	10 EA.
HDPE BALLAST TANK	48"	24"	24"	8 EA.
POLYSTYRENE BILLET	60"	62"	18"	2 EA.
POLYSTYRENE BILLET	60"	62"	22"	2 EA.

MODULE: C-2 ITEM DESCRIPTION	LENGTH	WIDTH	HEIGHT	QUANTITY
HDPE FLOTATION TUB	48"	48"	24"	10 EA.
HDPE BALLAST TANK	48"	24"	24"	8 EA.
POLYSTYRENE BILLET	60"	62"	18"	2 EA.
POLYSTYRENE BILLET	60"	62"	22"	2 EA.

MODULE: C-3 ITEM DESCRIPTION	LENGTH	WIDTH	HEIGHT	QUANTITY
HDPE FLOTATION TUB	48"	36"	32"	10 EA.
HDPE BALLAST TANK	48"	24"	24"	8 EA.
POLYSTYRENE BILLET	60"	62"	15"	2 EA.
POLYSTYRENE BILLET	60"	62"	19"	2 EA.

MODULE: C-4 ITEM DESCRIPTION	LENGTH	WIDTH	HEIGHT	QUANTITY
HDPE FLOTATION TUB	48"	36"	32"	14 EA.
HDPE BALLAST TANK	48"	24"	24"	12 EA.
POLYSTYRENE BILLET	60"	62"	14"	4 EA.
POLYSTYRENE BILLET	60"	62"	17"	2 EA.

MODULE: C-5 ITEM DESCRIPTION	LENGTH	WIDTH	HEIGHT	QUANTITY
HDPE FLOTATION TUB	48"	36"	32"	10 EA.
HDPE BALLAST TANK	48"	24"	24"	8 EA.
POLYSTYRENE BILLET	60"	62"	14"	2 EA.
POLYSTYRENE BILLET	60"	62"	18"	2 EA.

MODULE: C-6 ITEM DESCRIPTION	LENGTH	WIDTH	HEIGHT	QUANTITY
HDPE FLOTATION TUB	48"	48"	24"	10 EA.
HDPE BALLAST TANK	48"	24"	24"	8 EA.
POLYSTYRENE BILLET	60"	62"	20"	2 EA.
POLYSTYRENE BILLET	60"	62"	24"	1 EA.
POLYSTYRENE BILLET	60"	62"	26"	1 EA.

MODULE: D-1 ITEM DESCRIPTION	LENGTH	WIDTH	HEIGHT	QUANTITY
HDPE FLOTATION TUB	48"	36"	32"	10 EA.
HDPE BALLAST TANK	48"	24"	24"	8 EA.
POLYSTYRENE BILLET	60"	62"	14"	2 EA.
POLYSTYRENE BILLET	60"	62"	18"	2 EA.

MODULE: D-2 ITEM DESCRIPTION	LENGTH	WIDTH	HEIGHT	QUANTITY
HDPE FLOTATION TUB	48"	36"	32"	10 EA.
HDPE BALLAST TANK	48"	24"	24"	8 EA.
POLYSTYRENE BILLET	60"	62"	22"	2 EA.
POLYSTYRENE BILLET	60"	62"	26"	2 EA.

MODULE: D-3 ITEM DESCRIPTION	LENGTH	WIDTH	HEIGHT	QUANTITY
HDPE FLOTATION TUB	48"	48"	24"	10 EA.
HDPE BALLAST TANK	48"	24"	24"	8 EA.
POLYSTYRENE BILLET	60"	62"	19"	2 EA.
POLYSTYRENE BILLET	60"	62"	23"	2 EA.

MODULE: D-4 ITEM DESCRIPTION	LENGTH	WIDTH	HEIGHT	QUANTITY
HDPE FLOTATION TUB	48"	48"	24"	10 EA.
HDPE BALLAST TANK	48"	24"	24"	8 EA.
POLYSTYRENE BILLET	60"	62"	21"	2 EA.
POLYSTYRENE BILLET	60"	62"	25"	2 EA.

MODULE: D-5 ITEM DESCRIPTION	LENGTH	WIDTH	HEIGHT	QUANTITY
HDPE FLOTATION TUB	48"	48"	24"	10 EA.
HDPE BALLAST TANK	48"	24"	24"	8 EA.
POLYSTYRENE BILLET	60"	62"	18"	2 EA.
POLYSTYRENE BILLET	60"	62"	22"	2 EA.

MODULE: D-6 ITEM DESCRIPTION	LENGTH	WIDTH	HEIGHT	QUANTITY
HDPE FLOTATION TUB	48"	36"	32"	10 EA.
HDPE BALLAST TANK	48"	24"	24"	8 EA.
POLYSTYRENE BILLET	60"	62"	15"	2 EA.
POLYSTYRENE BILLET	60"	62"	19"	1 EA.
POLYSTYRENE BILLET	60"	62"	23"	1 EA.

MODULE: G-1 ITEM DESCRIPTION	LENGTH	WIDTH	HEIGHT	QUANTITY
HDPE FLOTATION TUB	48"	36"	32"	10 EA.
HDPE BALLAST TANK	48"	24"	24"	6 EA.
POLYSTYRENE BILLET	60"	62"	12"	1 EA.
POLYSTYRENE BILLET	60"	62"	22"	2 EA.
POLYSTYRENE BILLET	60"	108"	23"	1 EA.

MODULE: G-2 ITEM DESCRIPTION	LENGTH	WIDTH	HEIGHT	QUANTITY
HDPE FLOTATION TUB	48"	36"	32"	10 EA.
HDPE BALLAST TANK	48"	24"	24"	10 EA.
POLYSTYRENE BILLET	60"	62"	15"	5 EA.
POLYSTYRENE BILLET	60"	108"	29"	2 EA.

MODULE: C GANGWAY ITEM DESCRIPTION	LENGTH	WIDTH	HEIGHT	QUANTITY
HDPE FLOTATION TUB	48"	48"	32"	24 EA.
POLYSTYRENE BILLET	96"	20"	10"	12 EA.

MODULE: SUBSTATION ITEM DESCRIPTION	LENGTH	WIDTH	HEIGHT	QUANTITY
HDPE FLOTATION TUB	48"	36"	24"	4 EA.
POLYSTYRENE BILLET	84"	35"	28"	1 EA.

MODULE: 32' FINGER ITEM DESCRIPTION	LENGTH	WIDTH	HEIGHT	QUANTITY
HDPE FLOTATION TUB	48"	36"	32"	4 EA.
HDPE FLOTATION TUB	48"	36"	20"	1 EA.
HDPE BALLAST TANK	48"	36"	32"	2 EA.
HDPE BALLAST TANK	48"	48"	32"	1 EA.
POLYSTYRENE BILLET	48"	16"	20"	6 EA.

MODULE: 42' FINGER ITEM DESCRIPTION	LENGTH	WIDTH	HEIGHT	QUANTITY
HDPE FLOTATION TUB	72"	36"	32"	4 EA.
HDPE FLOTATION TUB	72"	48"	32"	1 EA.
HDPE BALLAST TANK	72"	48"	32"	4 EA.
POLYSTYRENE BILLET	72"	17"	20"	6 EA.
POLYSTYRENE BILLET	72"	17"	23"	2 EA.

MODULE: 48' FINGER ITEM DESCRIPTION	LENGTH	WIDTH	HEIGHT	QUANTITY
HDPE FLOTATION TUB	72"	36"	32"	6 EA.
HDPE BALLAST TANK	72"	36"	32"	4 EA.
POLYSTYRENE BILLET	72"	19"	19"	6 EA.
POLYSTYRENE BILLET	72"	19"	22"	2 EA.

MODULE: 60' FINGER ITEM DESCRIPTION	LENGTH	WIDTH	HEIGHT	QUANTITY
HDPE FLOTATION TUB	48"	36"	32"	12 EA.
HDPE BALLAST TANK	48"	24"	24"	10 EA.
POLYSTYRENE BILLET	60"	38"	17"	3 EA.
POLYSTYRENE BILLET	60"	38"	22"	2 EA.

MODULE: 62' FINGER ITEM DESCRIPTION	LENGTH	WIDTH	HEIGHT	QUANTITY
HDPE FLOTATION TUB	72"	36"	24"	8 EA.
HDPE FLOTATION TUB	48"	36"	24"	4 EA.
HDPE BALLAST TANK	48"	24"	24"	10 EA.
POLYSTYRENE BILLET	60"	38"	21"	4 EA.
POLYSTYRENE BILLET	60"	38"	24"	1 EA.

85' FINGER UNIT: 32' MODULE ITEM DESCRIPTION	LENGTH	WIDTH	HEIGHT	QUANTITY
HDPE FLOTATION TUB	72"	36"	24"	6 EA.
HDPE BALLAST TANK	48"	24"	24"	4 EA.
POLYSTYRENE BILLET	60"	28"	19"	2 EA.

85' FINGER UNIT: 42' MODULE ITEM DESCRIPTION	LENGTH	WIDTH	HEIGHT	QUANTITY
HDPE FLOTATION TUB	72"	36"	24"	2 EA.
HDPE FLOTATION TUB	48"	36"	24"	4 EA.
HDPE BALLAST TANK	48"	24"	24"	6 EA.
POLYSTYRENE BILLET	60"	38"	28"	3 EA.

85' FINGER UNIT: ANGLED MODULE ITEM DESCRIPTION	LENGTH	WIDTH	HEIGHT	QUANTITY
POLYSTYRENE BILLET	50"	36"	28"	1 EA.
POLYSTYRENE BILLET	74"	29"	28"	1 EA.

110' FINGER UNIT: 42' MODULE ITEM DESCRIPTION	LENGTH	WIDTH	HEIGHT	QUANTITY
HDPE FLOTATION TUB	48"	36"	32"	10 EA.
HDPE BALLAST TANK	48"	24"	24"	8 EA.
POLYSTYRENE BILLET	60"	62"	14"	2 EA.
POLYSTYRENE BILLET	60"	62"	18"	2 EA.

110' FINGER UNIT: 42' END MODULE ITEM DESCRIPTION	LENGTH	WIDTH	HEIGHT	QUANTITY
HDPE FLOTATION TUB	48"	36"	32"	10 EA.
HDPE BALLAST TANK	48"	24"	24"	8 EA.
POLYSTYRENE BILLET	60"	62"	15"	2 EA.
POLYSTYRENE BILLET	60"	62"	19"	1 EA.
POLYSTYRENE BILLET	60"	62"	21"	1 EA.

110' FINGER UNIT: ANGLED MODULE ITEM DESCRIPTION	LENGTH	WIDTH	HEIGHT	QUANTITY
HDPE FLOTATION TUB	48"	48"	32"	1 EA.
HDPE FLOTATION TUB	48"	36"	32"	3 EA.
HDPE BALLAST TANK	48"	24"	24"	2 EA.
POLYSTYRENE BILLET	60"	62"	25"	1 EA.

MISCELLANEOUS FLOTATION ITEM DESCRIPTION	LENGTH	WIDTH	HEIGHT	QUANTITY
ANGLED TRANSITION FLOAT A				
POLYSTYRENE BILLET	48"	32"	30"	2 EA.
POLYSTYRENE BILLET	48"	38"	30"	1 EA.
ANGLED TRANSITION FLOAT B				
POLYSTYRENE BILLET	48"	25"	31"	2 EA.
POLYSTYRENE BILLET	42"	25"	31"	2 EA.
ANGLED TRANSITION FLOAT C				
POLYSTYRENE BILLET	48"	28"	30"	2 EA.
POLYSTYRENE BILLET	48"	40"	30"	1 EA.
PILE MODULE – 4'x10' 12¾" HOOP				
POLYSTYRENE BILLET	114"	47"	21"	1 EA.
PILE MODULE – 4'x10' 16" HOOP				
POLYSTYRENE BILLET	120"	47"	23"	1 EA.
PILE MODULE – 4'x8' 16" HOOP				
POLYSTYRENE BILLET	90"	47"	22"	1 EA.

** NOTE: UNLESS OTHERWISE NOTED, LOCATE THE 2 DEEPEST POLYSTYRENE BILLETS AT EACH END OF THE FLOAT MODULE AS SHOWN ON THE FLOAT UNIT ELEVATION.

** NOTE: BALLAST TANK WALL THICKNESS TO BE 0.375".

** NOTE: FLOTATION TUB WALL THICKNESS TO BE 0.175"

CITY & BOROUGH OF JUNEAU DOCKS & HARBORS

REVISIONS

REV.	DATE	DESCRIPTION	DWN.	CKD.	APP.

PND ENGINEERS, INC.
9360 Glacier Highway, Ste. 100
Juneau, Alaska 99801
Phone: 907-586-2093
Fax: 907-586-2099
www.pndengineers.com

DESIGN: MS CHECKED: JLD
DRAWN: DRD APPROVED: CRS
SCALE:
DATE: 2/28/14

STATE OF ALASKA — John L. DeMuth — CE-8847 — REGISTERED PROFESSIONAL ENGINEER

CITY & BOROUGH OF JUNEAU, ALASKA
AURORA HARBOR REBUILD - PHASE I
CONTRACT NO. DH 12-160

SHEET TITLE: FLOTATION SCHEDULES

PND PROJECT NO: 122055

5.09
SHEET 47 OF 143

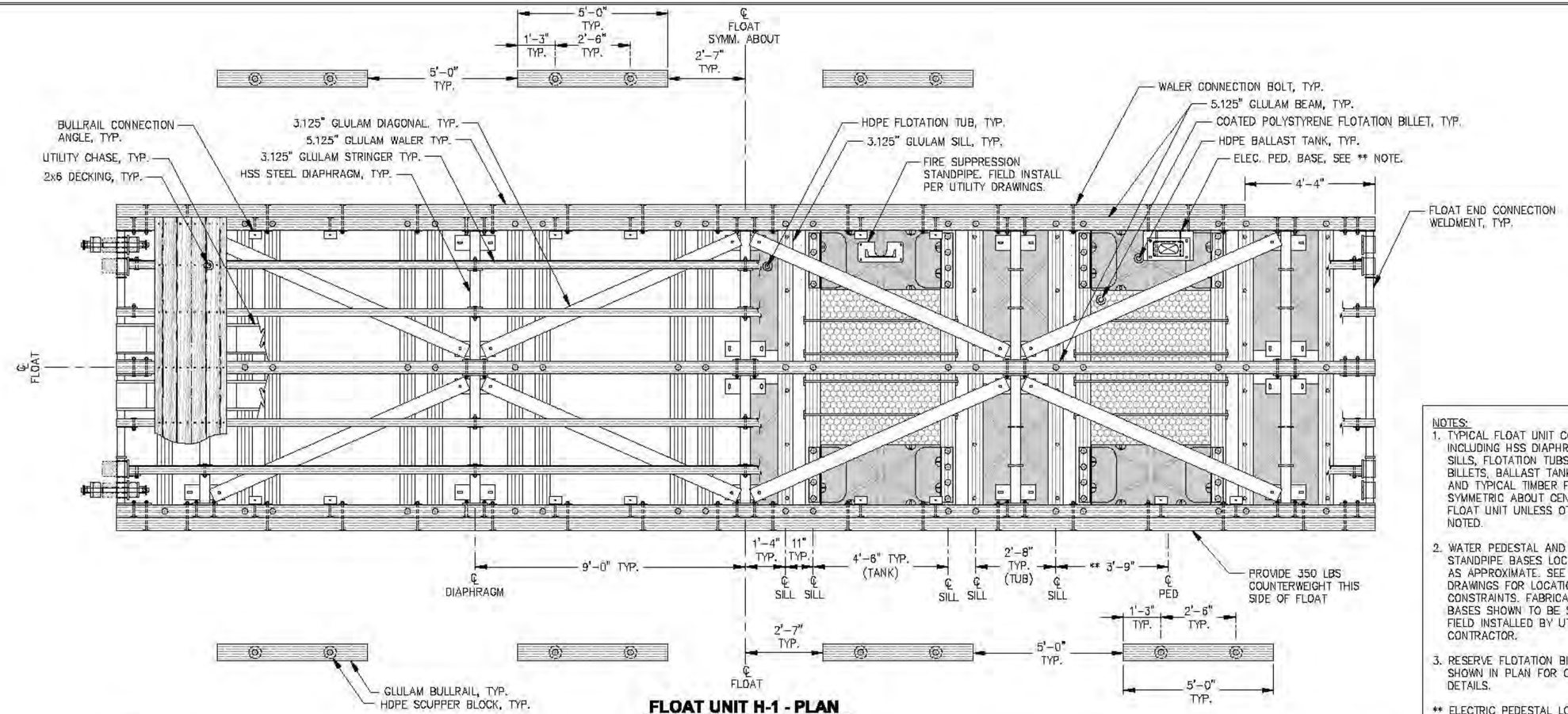

FLOAT UNIT H-1 - PLAN

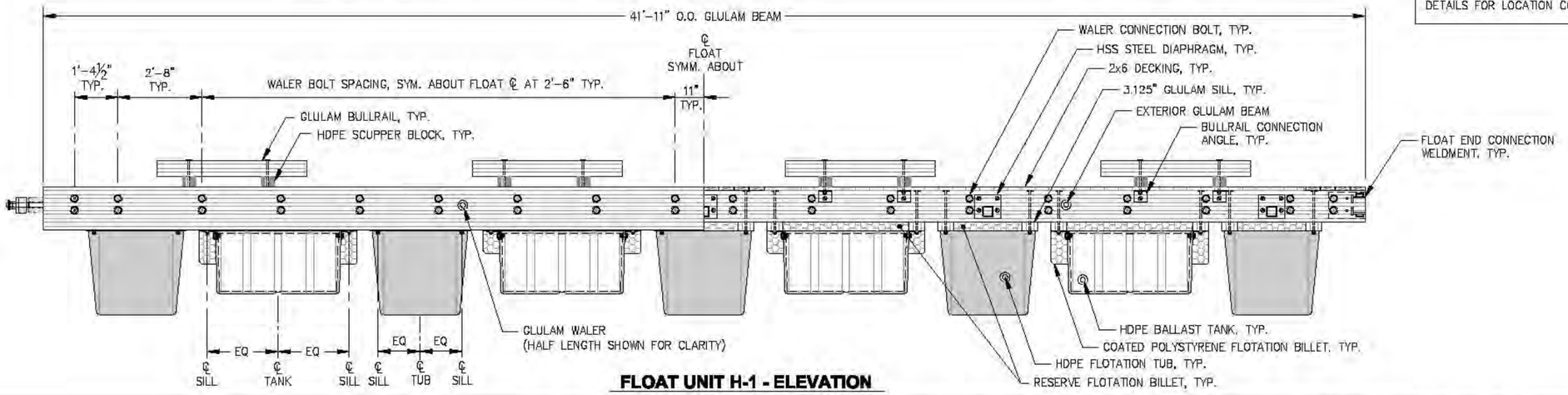

FLOAT UNIT H-1 - ELEVATION

NOTES:
1. TYPICAL FLOAT UNIT COMPONENTS INCLUDING HSS DIAPHRAGMS, GLULAM SILLS, FLOTATION TUBS, FLOTATION BILLETS, BALLAST TANKS, DIAGONALS AND TYPICAL TIMBER FRAMING ARE SYMMETRIC ABOUT CENTERLINE OF FLOAT UNIT UNLESS OTHERWISE NOTED.
2. WATER PEDESTAL AND FIRE STANDPIPE BASES LOCATIONS SHOWN AS APPROXIMATE. SEE UTILITY DRAWINGS FOR LOCATION CONSTRAINTS. FABRICATED STEEL BASES SHOWN TO BE SUPPLIED AND FIELD INSTALLED BY UTILITY CONTRACTOR.
3. RESERVE FLOTATION BILLETS NOT SHOWN IN PLAN FOR CLARITY, SEE DETAILS.

** ELECTRIC PEDESTAL LOCATIONS SHOWN APPROX. SEE PEDESTAL BASE DETAILS FOR LOCATION CONSTRAINTS

REVISIONS

REV.	DATE	DESCRIPTION	DWN.	CKD.	APP.

PND ENGINEERS, INC.
9360 Glacier Highway, Ste. 100
Juneau, Alaska 99801
Phone: 907-586-2093
Fax: 907-586-2099
www.pndengineers.com

DESIGN: MS CHECKED: JLD
DRAWN: WRB APPROVED: CRS
SCALE:

STATE OF ALASKA — John L. Dellatti CE-8847 — REGISTERED PROFESSIONAL ENGINEER
DATE: 2/28/14

CITY & BOROUGH OF JUNEAU, ALASKA
AURORA HARBOR REBUILD - PHASE I
CONTRACT NO. DH 12-160

SHEET TITLE:
HEADWALK FLOAT UNIT H-1

PND PROJECT NO.: 122055

6.01
SHEET 48 OF 143

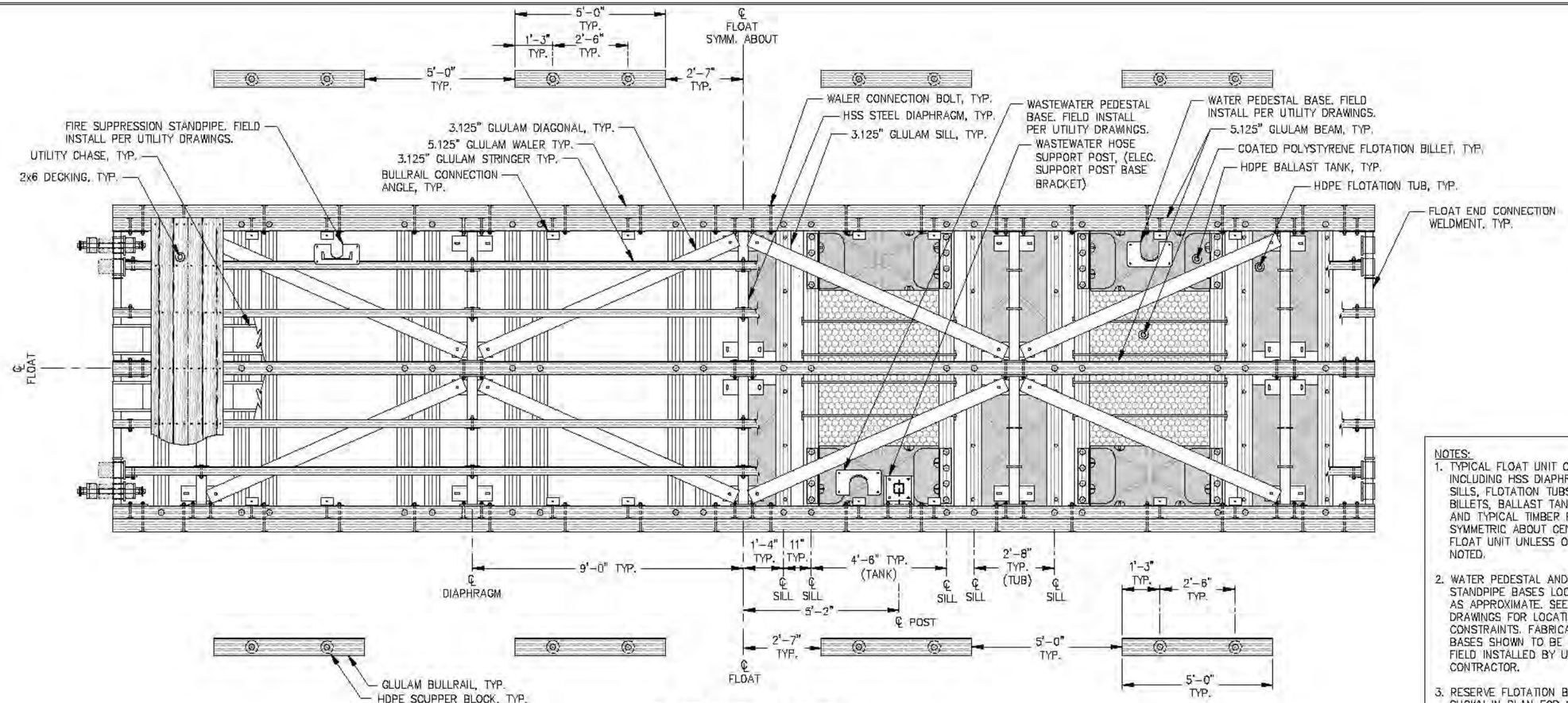

FLOAT UNIT H-2 - PLAN

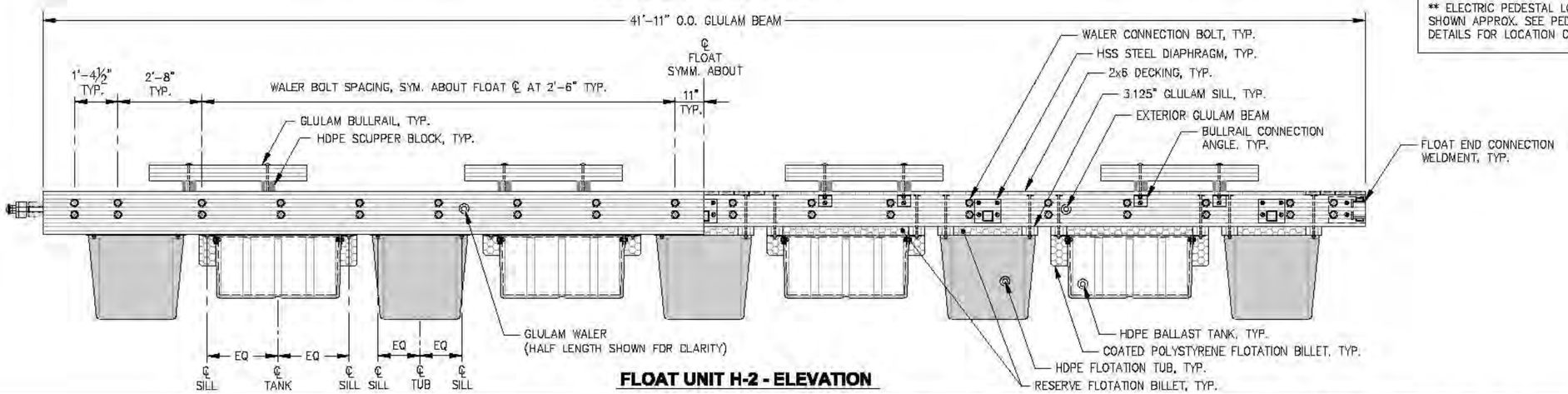

FLOAT UNIT H-2 - ELEVATION

NOTES:

1. TYPICAL FLOAT UNIT COMPONENTS INCLUDING HSS DIAPHRAGMS, GLULAM SILLS, FLOTATION TUBS, FLOTATION BILLETS, BALLAST TANKS, DIAGONALS AND TYPICAL TIMBER FRAMING ARE SYMMETRIC ABOUT CENTERLINE OF FLOAT UNIT UNLESS OTHERWISE NOTED.
2. WATER PEDESTAL AND FIRE STANDPIPE BASES LOCATIONS SHOWN AS APPROXIMATE. SEE UTILITY DRAWINGS FOR LOCATION CONSTRAINTS. FABRICATED STEEL BASES SHOWN TO BE SUPPLIED AND FIELD INSTALLED BY UTILITY CONTRACTOR.
3. RESERVE FLOTATION BILLETS NOT SHOWN IN PLAN FOR CLARITY, SEE DETAILS.

** ELECTRIC PEDESTAL LOCATIONS SHOWN APPROX. SEE PEDESTAL BASE DETAILS FOR LOCATION CONSTRAINTS

REVISIONS

REV.	DATE	DESCRIPTION	DWN.	CKD.	APP.

PND ENGINEERS, INC.
9360 Glacier Highway, Ste. 100
Juneau, Alaska 99801
Phone: 907-586-2093
Fax: 907-586-2099
www.pndengineers.com

DESIGN: MS CHECKED: JLD
DRAWN: WRB APPROVED: CRS
SCALE:

STATE OF ALASKA — John L. Dellath CE-8847 — REGISTERED PROFESSIONAL ENGINEER
DATE: 2/28/14

CITY & BOROUGH OF JUNEAU, ALASKA
AURORA HARBOR REBUILD - PHASE I
CONTRACT NO. DH 12-160

SHEET TITLE: **HEADWALK FLOAT UNIT H2**

PND PROJECT NO.: 122055

6.02
SHEET 48 OF 143

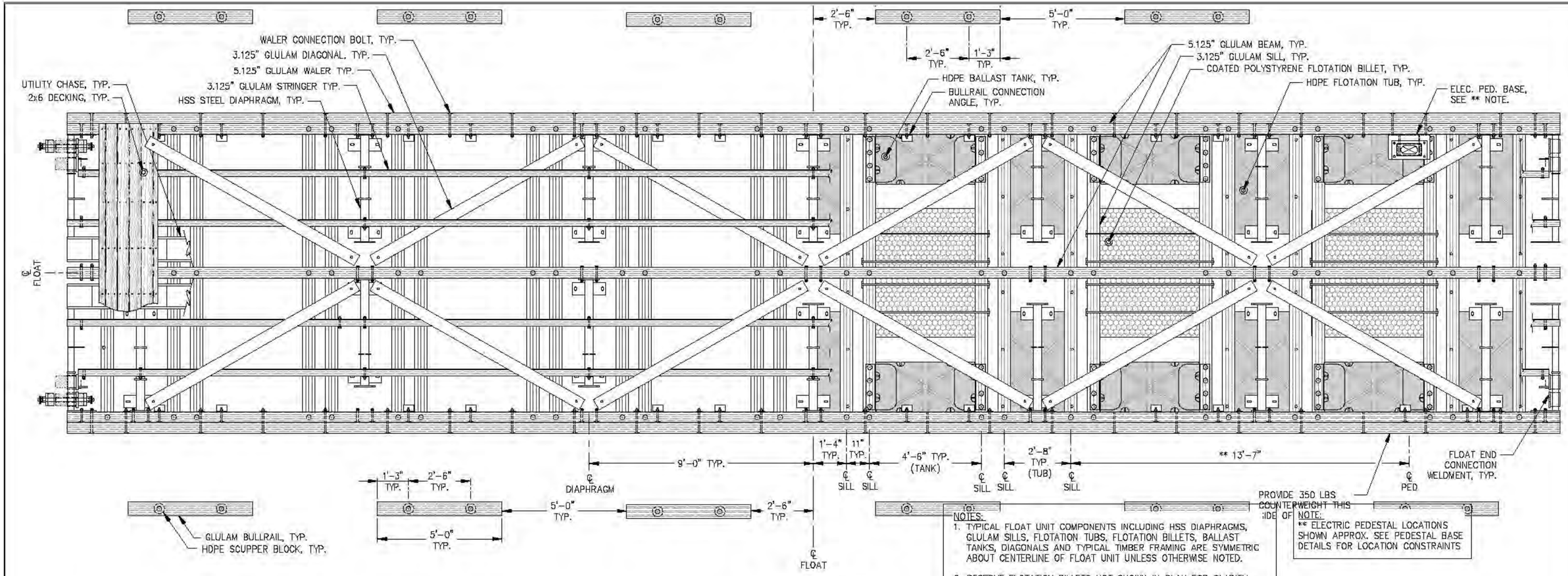

FLOAT UNIT H-3 - PLAN

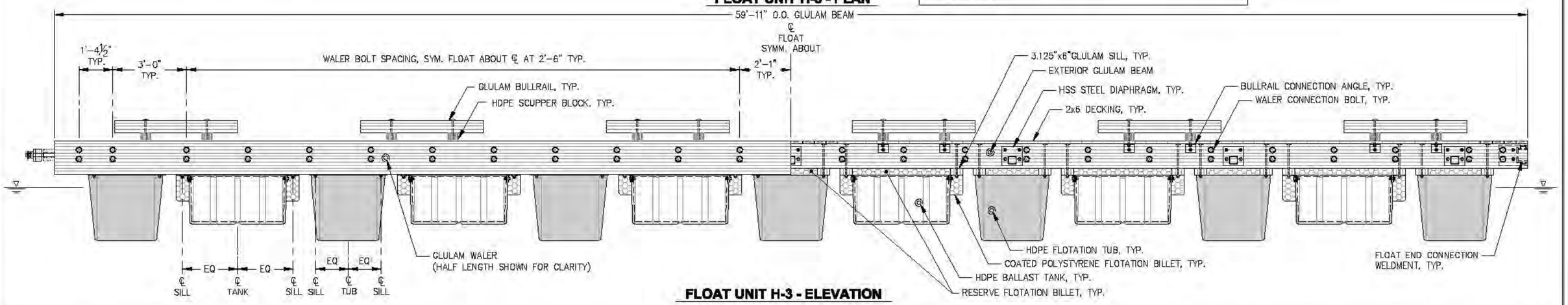

FLOAT UNIT H-3 - ELEVATION

REVISIONS

REV.	DATE	DESCRIPTION	DWN.	CKD.	APP.

P N D ENGINEERS, INC.
9360 Glacier Highway, Ste. 100
Juneau, Alaska 99801
Phone: 907-586-2093
Fax: 907-586-2099
www.pndengineers.com

DESIGN: MS CHECKED: JLD
DRAWN: WRB APPROVED: CRS
SCALE:

STATE OF ALASKA — John L. DeMuth CE-8847 — REGISTERED PROFESSIONAL CIVIL ENGINEER
DATE: 2/28/14

CITY & BOROUGH OF JUNEAU, ALASKA
AURORA HARBOR REBUILD - PHASE I
CONTRACT NO. DH 12-160

SHEET TITLE:
HEADWALK FLOAT UNIT H-3

PND PROJECT NO.: 122055

6.03
SHEET 50 OF 143

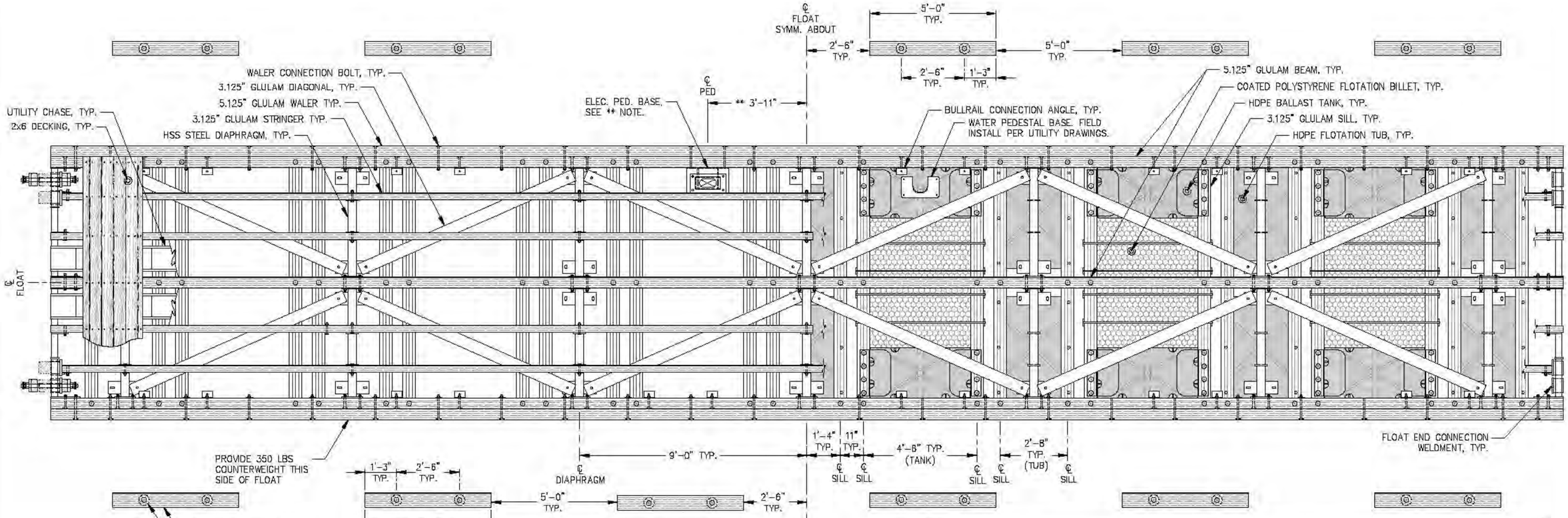

FLOAT UNIT H-4 - PLAN

NOTE:
** ELECTRIC PEDESTAL LOCATIONS SHOWN APPROX. SEE PEDESTAL BASE DETAILS FOR LOCATION CONSTRAINTS

NOTES:
1. TYPICAL FLOAT UNIT COMPONENTS INCLUDING HSS DIAPHRAGMS, GLULAM SILLS, FLOTATION TUBS, FLOTATION BILLETS, BALLAST TANKS, DIAGONALS AND TYPICAL TIMBER FRAMING ARE SYMMETRIC ABOUT CENTERLINE OF FLOAT UNIT UNLESS OTHERWISE NOTED.
2. WATER PEDESTAL AND FIRE STANDPIPE BASES LOCATIONS SHOWN AS APPROXIMATE. SEE UTILITY DRAWINGS FOR LOCATION CONSTRAINTS. FABRICATED STEEL BASES SHOWN TO BE SUPPLIED AND FIELD INSTALLED BY UTILITY CONTRACTOR.
3. RESERVE FLOTATION BILLETS NOT SHOWN IN PLAN FOR CLARITY, SEE DETAILS.

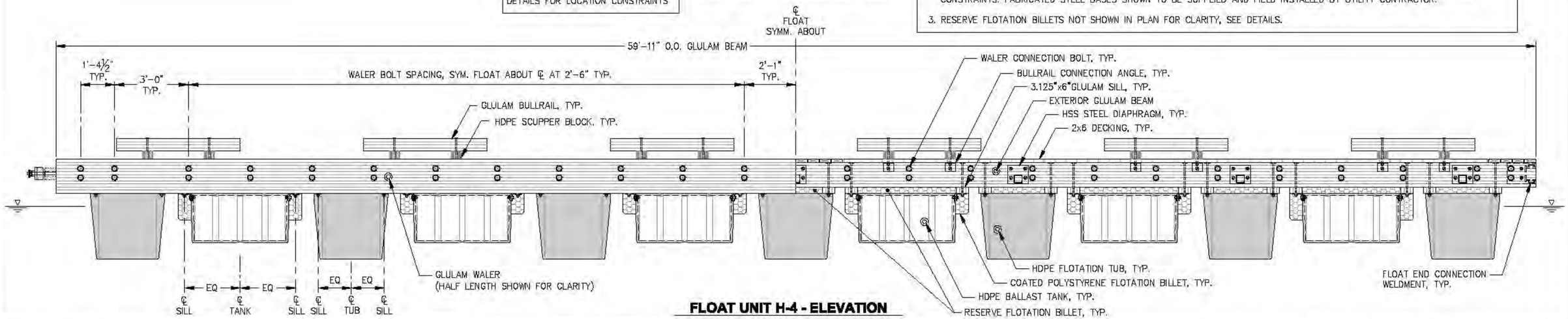

FLOAT UNIT H-4 - ELEVATION

REVISIONS

REV.	DATE	DESCRIPTION	DWN.	CKD.	APP.

P N D ENGINEERS, INC.
9360 Glacier Highway, Ste. 100
Juneau, Alaska 99801
Phone: 907-586-2093
Fax: 907-586-2099
www.pndengineers.com

DESIGN: MS CHECKED: JLD
DRAWN: WRB APPROVED: CRS
SCALE:

STATE OF ALASKA — John L. Dalrymple — CE-8847 — REGISTERED PROFESSIONAL ENGINEER
DATE: 2/28/14

CITY & BOROUGH OF JUNEAU, ALASKA
AURORA HARBOR REBUILD - PHASE I
CONTRACT NO. DH 12-160

SHEET TITLE: **HEADWALK FLOAT UNIT H-4**

PND PROJECT NO.: 122055

6.04
SHEET 51 OF 143

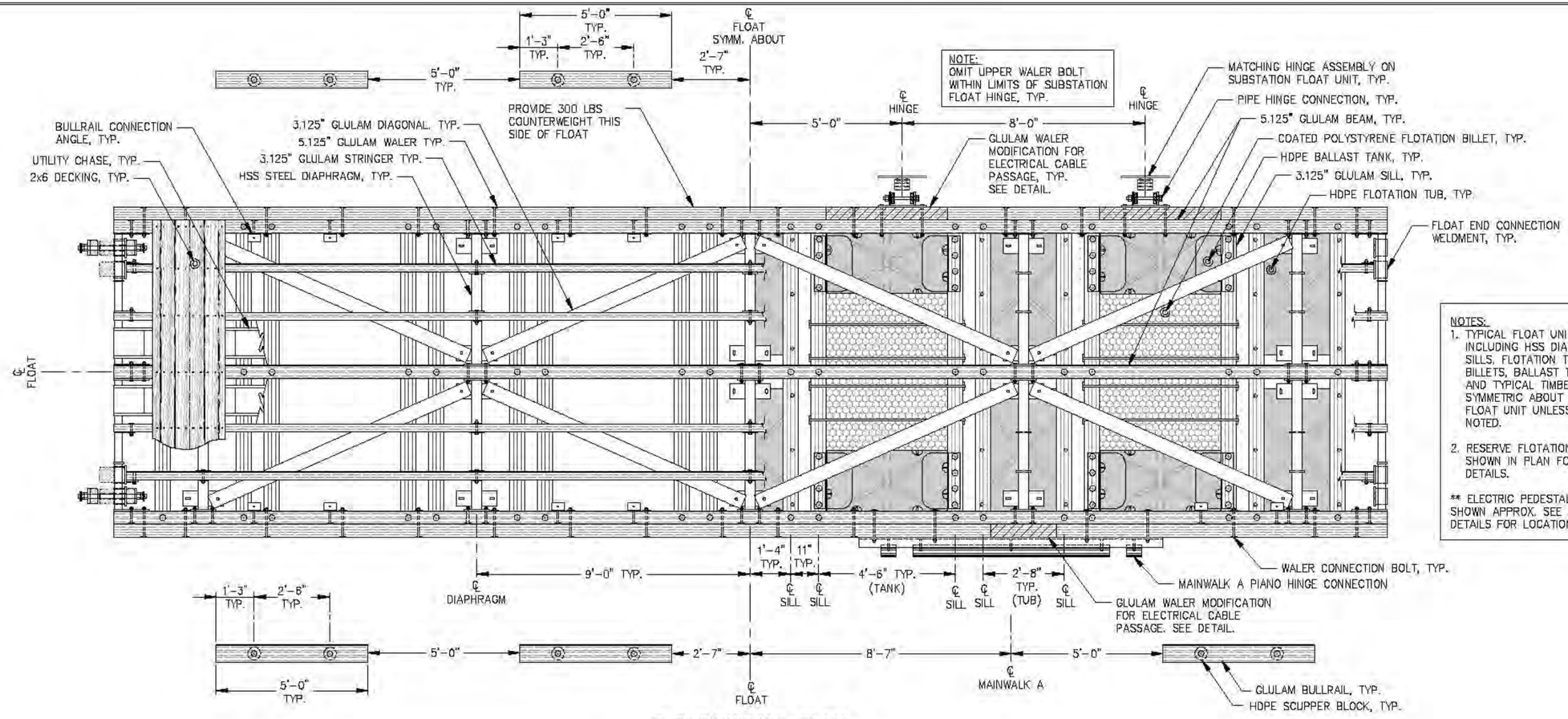

FLOAT UNIT H-5 - PLAN

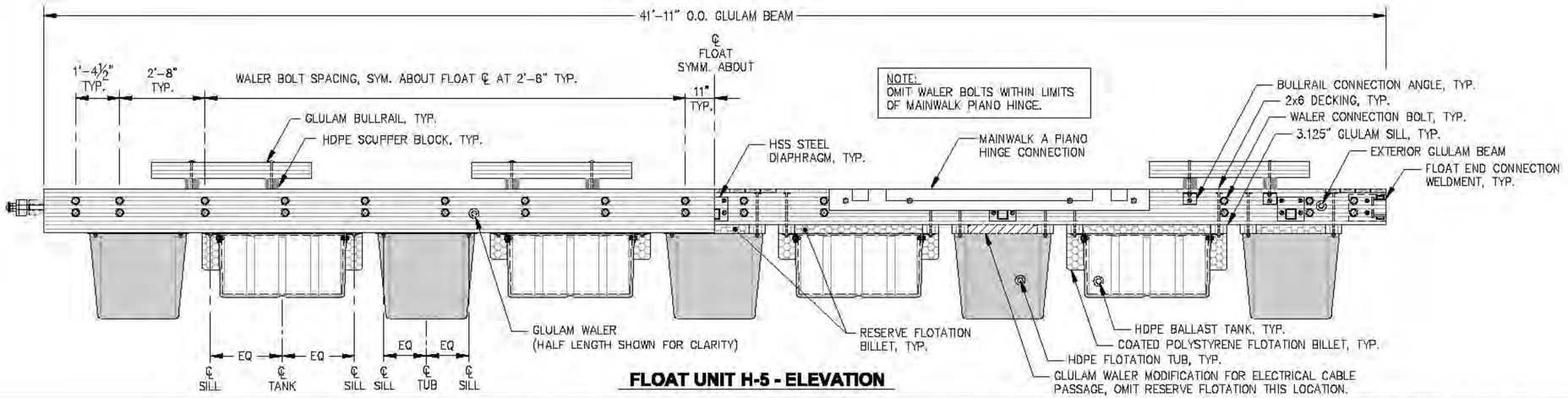

FLOAT UNIT H-5 - ELEVATION

REVISIONS

REV.	DATE	DESCRIPTION	DWN.	CKD.	APP.

PND ENGINEERS, INC.
9360 Glacier Highway, Ste. 100
Juneau, Alaska 99801
Phone: 907-586-2093
Fax: 907-586-2099
www.pndengineers.com

DESIGN: MS CHECKED: JLD
DRAWN: WRB APPROVED: CRS
SCALE:
DATE: 2/28/14

STATE OF ALASKA — John L. Dekuth — CC-8847 — REGISTERED PROFESSIONAL ENGINEER

CITY & BOROUGH OF JUNEAU, ALASKA
AURORA HARBOR REBUILD - PHASE I
CONTRACT NO. DH 12-160

SHEET TITLE:
HEADWALK FLOAT UNIT H-5

PND PROJECT NO.: 122055

6.05
SHEET 52 OF 143

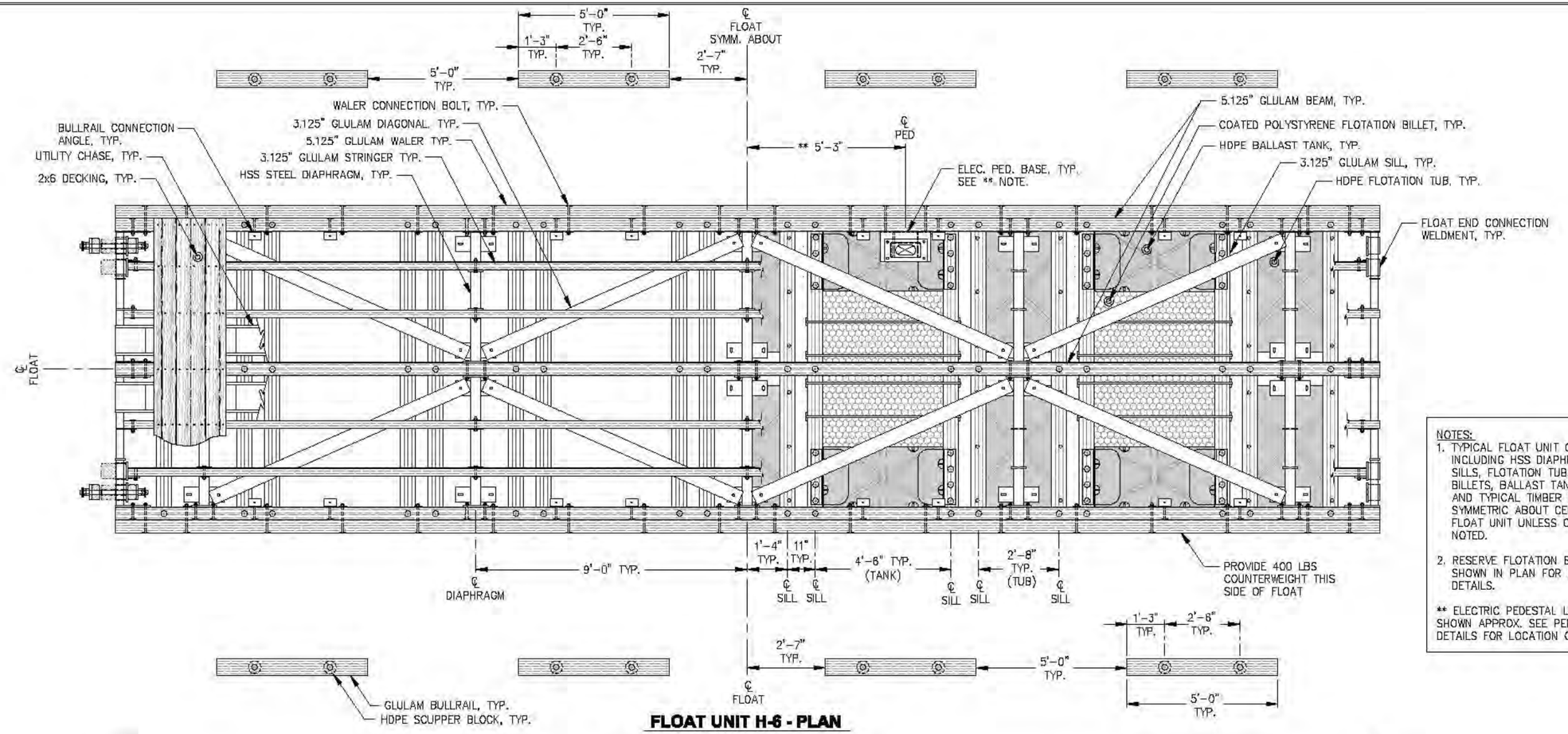

FLOAT UNIT H-6 - PLAN

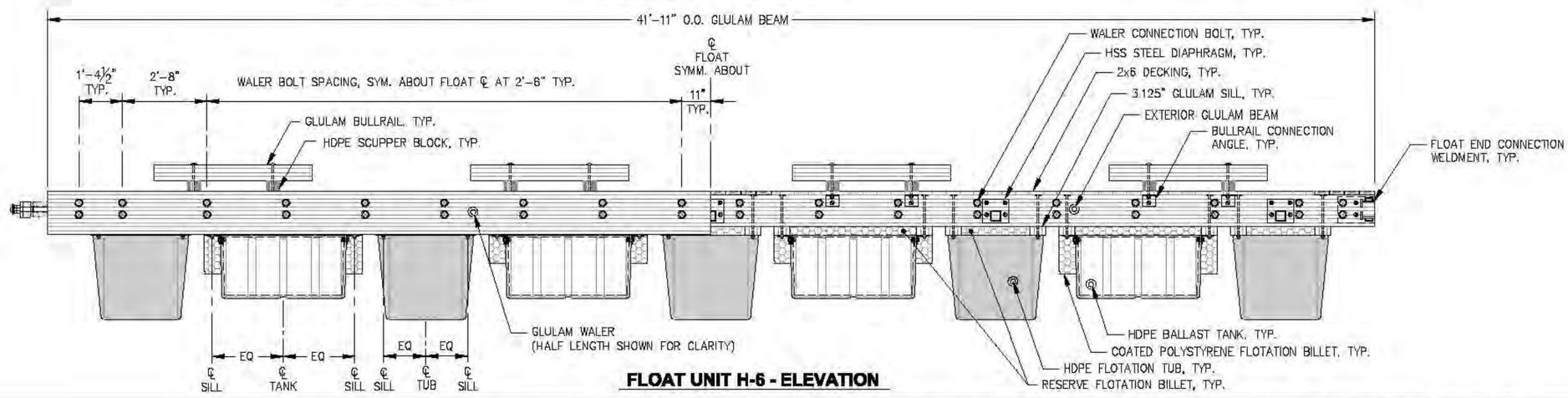

FLOAT UNIT H-6 - ELEVATION

NOTES:
1. TYPICAL FLOAT UNIT COMPONENTS INCLUDING HSS DIAPHRAGMS, GLULAM SILLS, FLOTATION TUBS, FLOTATION BILLETS, BALLAST TANKS, DIAGONALS AND TYPICAL TIMBER FRAMING ARE SYMMETRIC ABOUT CENTERLINE OF FLOAT UNIT UNLESS OTHERWISE NOTED.
2. RESERVE FLOTATION BILLETS NOT SHOWN IN PLAN FOR CLARITY, SEE DETAILS.

** ELECTRIC PEDESTAL LOCATIONS SHOWN APPROX. SEE PEDESTAL BASE DETAILS FOR LOCATION CONSTRAINTS

CITY & BOROUGH OF JUNEAU DOCKS & HARBORS

REVISIONS

REV.	DATE	DESCRIPTION	DWN.	CKD.	APP.

PND ENGINEERS, INC.
9360 Glacier Highway, Ste. 100
Juneau, Alaska 99801
Phone: 907-586-2093
Fax: 907-586-2099
www.pndengineers.com

DESIGN: MS CHECKED: JLD
DRAWN: WRB APPROVED: CRS
SCALE:

STATE OF ALASKA — John L. Dellutri CE-8847 — REGISTERED PROFESSIONAL ENGINEER
DATE: 2/28/14

CITY & BOROUGH OF JUNEAU, ALASKA
AURORA HARBOR REBUILD - PHASE I
CONTRACT NO. DH 12-160

SHEET TITLE: HEADWALK FLOAT UNIT H-6

PND PROJECT NO.: 122055

6.06
SHEET 53 OF 143

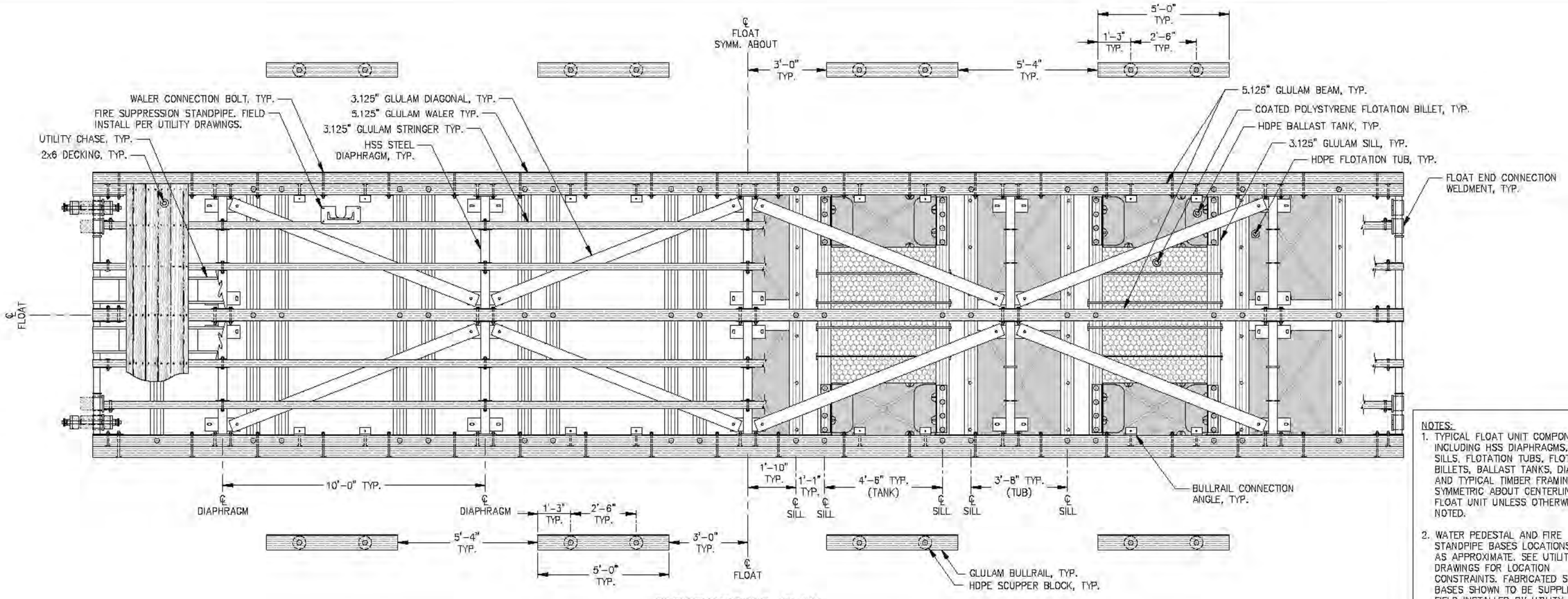

FLOAT UNIT H-7 - PLAN

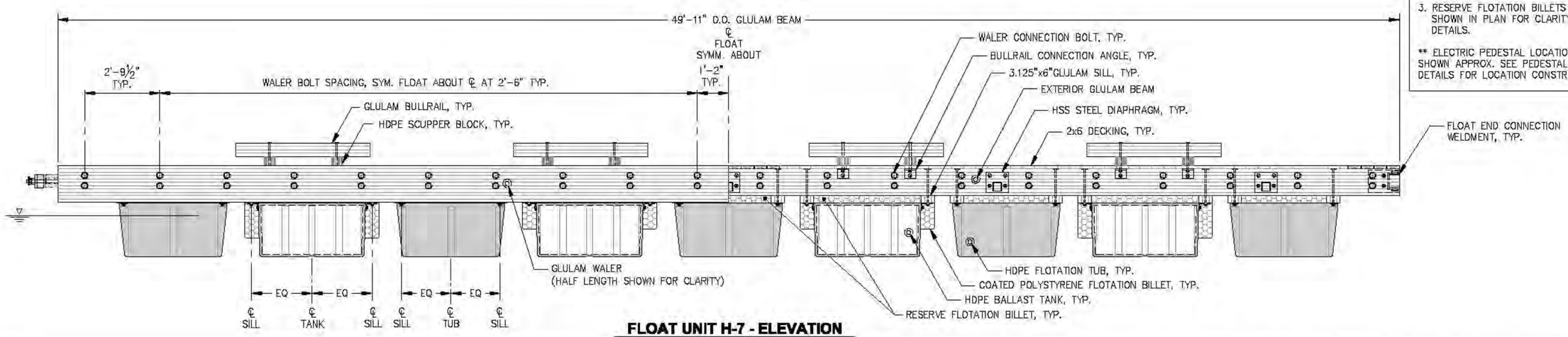

FLOAT UNIT H-7 - ELEVATION

NOTES:

1. TYPICAL FLOAT UNIT COMPONENTS INCLUDING HSS DIAPHRAGMS, GLULAM SILLS, FLOTATION TUBS, FLOTATION BILLETS, BALLAST TANKS, DIAGONALS AND TYPICAL TIMBER FRAMING ARE SYMMETRIC ABOUT CENTERLINE OF FLOAT UNIT UNLESS OTHERWISE NOTED.
2. WATER PEDESTAL AND FIRE STANDPIPE BASES LOCATIONS SHOWN AS APPROXIMATE. SEE UTILITY DRAWINGS FOR LOCATION CONSTRAINTS. FABRICATED STEEL BASES SHOWN TO BE SUPPLIED AND FIELD INSTALLED BY UTILITY CONTRACTOR.
3. RESERVE FLOTATION BILLETS NOT SHOWN IN PLAN FOR CLARITY. SEE DETAILS.

** ELECTRIC PEDESTAL LOCATIONS SHOWN APPROX. SEE PEDESTAL BASE DETAILS FOR LOCATION CONSTRAINTS

REVISIONS

REV.	DATE	DESCRIPTION	DWN.	CKD.	APP.

PND ENGINEERS, INC.
9360 Glacier Highway, Ste. 100
Juneau, Alaska 99801
Phone: 907-586-2093
Fax: 907-586-2099
www.pndengineers.com

DESIGN: MS CHECKED: JLD
DRAWN: WRB APPROVED: CRS
SCALE:
DATE: 2/28/14

STATE OF ALASKA — 49TH — John L. DeWaltt CE-8847 — REGISTERED PROFESSIONAL ENGINEER

CITY & BOROUGH OF JUNEAU, ALASKA
AURORA HARBOR REBUILD - PHASE I
CONTRACT NO. DH 12-160

SHEET TITLE: HEADWALK FLOAT UNIT H-7

PND PROJECT NO.: 122055

6.07
SHEET 54 OF 143

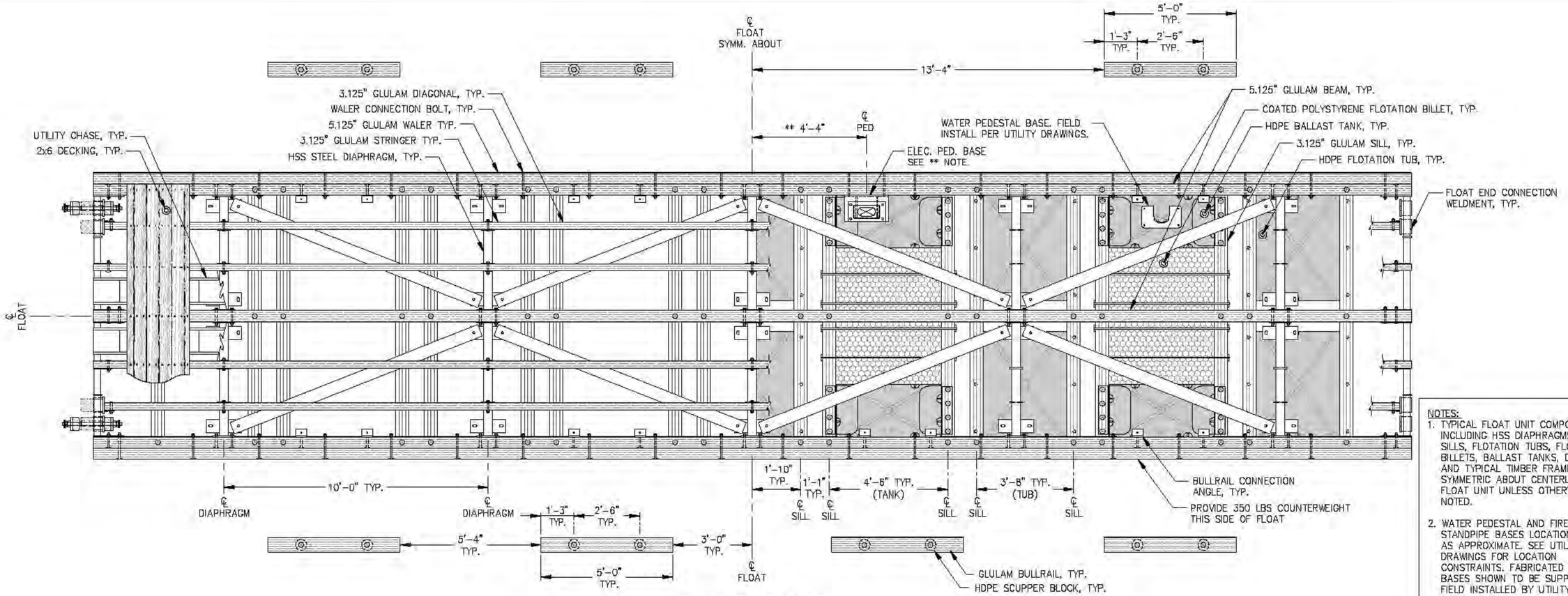

FLOAT UNIT H-8 - PLAN

NOTES:
1. TYPICAL FLOAT UNIT COMPONENTS INCLUDING HSS DIAPHRAGMS, GLULAM SILLS, FLOTATION TUBS, FLOTATION BILLETS, BALLAST TANKS, DIAGONALS AND TYPICAL TIMBER FRAMING ARE SYMMETRIC ABOUT CENTERLINE OF FLOAT UNIT UNLESS OTHERWISE NOTED.
2. WATER PEDESTAL AND FIRE STANDPIPE BASES LOCATIONS SHOWN AS APPROXIMATE. SEE UTILITY DRAWINGS FOR LOCATION CONSTRAINTS. FABRICATED STEEL BASES SHOWN TO BE SUPPLIED AND FIELD INSTALLED BY UTILITY CONTRACTOR.
3. RESERVE FLOTATION BILLETS NOT SHOWN IN PLAN FOR CLARITY, SEE DETAILS.

** ELECTRIC PEDESTAL LOCATIONS SHOWN APPROX. SEE PEDESTAL BASE DETAILS FOR LOCATION CONSTRAINTS

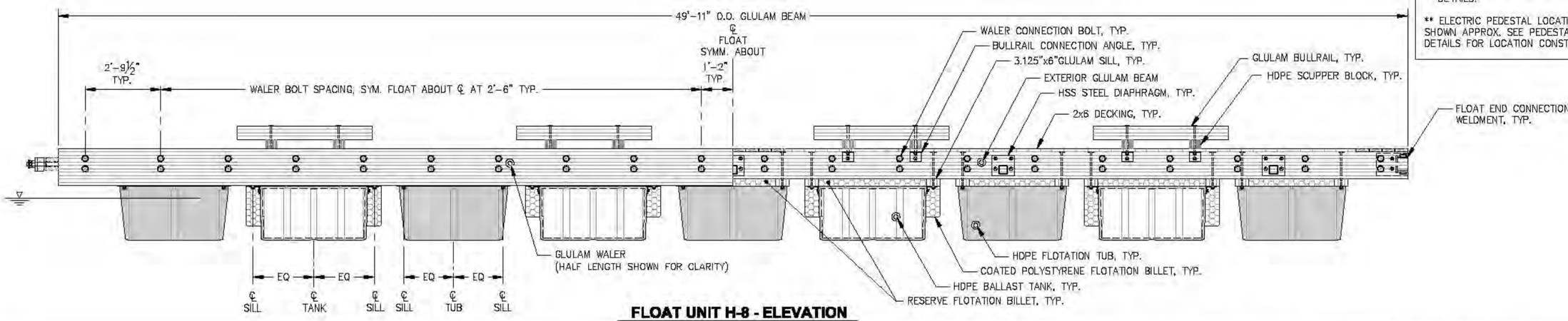

FLOAT UNIT H-8 - ELEVATION

REVISIONS

REV.	DATE	DESCRIPTION	DWN.	CKD.	APP.

P N D ENGINEERS, INC.
9360 Glacier Highway, Ste. 100
Juneau, Alaska 99801
Phone: 907-586-2093
Fax: 907-586-2099
www.pndengineers.com

DESIGN: MS CHECKED: JLD
DRAWN: WRB APPROVED: CRS
SCALE:
DATE: 2/28/14

STATE OF ALASKA — JOHN L. DeMARIS — CC-8847 — REGISTERED PROFESSIONAL CIVIL ENGINEER

CITY & BOROUGH OF JUNEAU, ALASKA
AURORA HARBOR REBUILD - PHASE I
CONTRACT NO. DH 12-160

SHEET TITLE: **HEADWALK FLOAT UNIT H-8**

PND PROJECT NO.: 122055

6.08
SHEET 55 OF 143

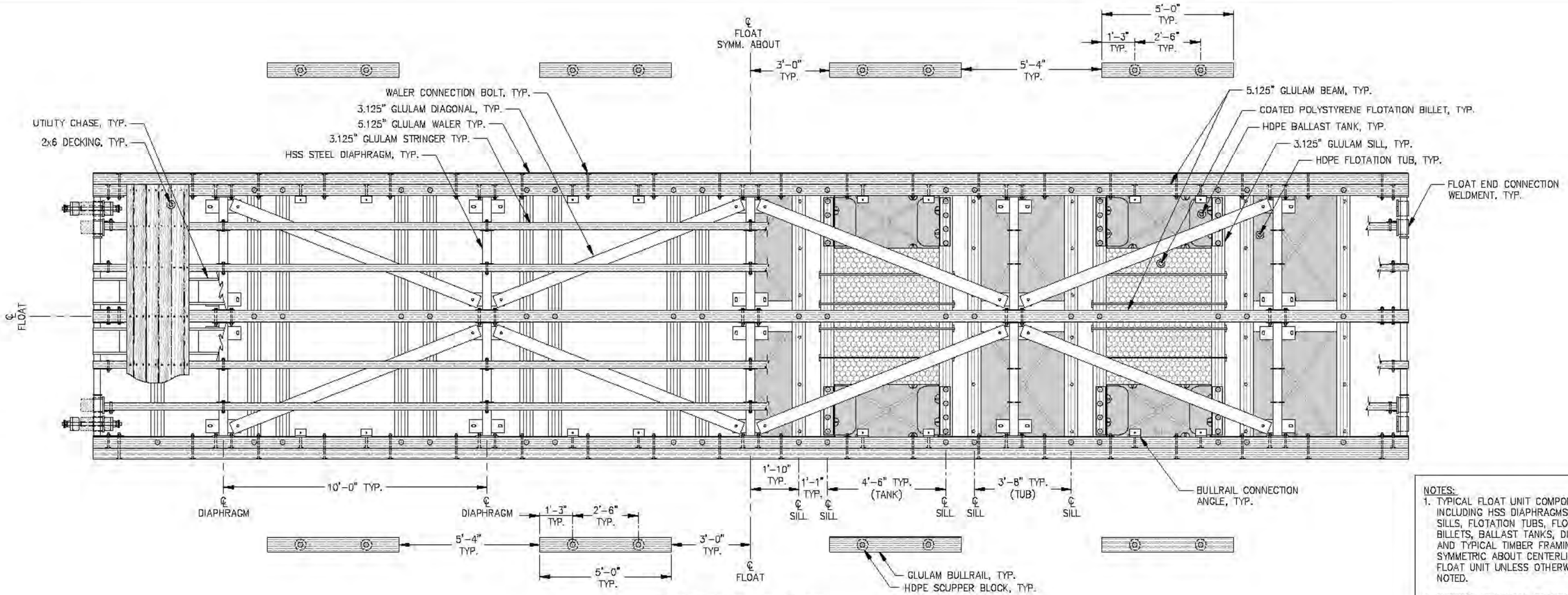

FLOAT UNIT H-9 - PLAN

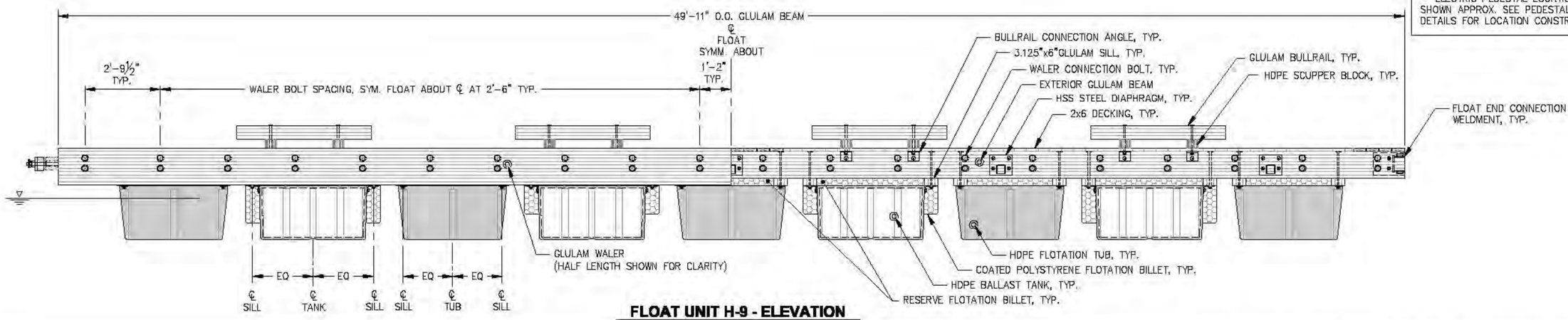

FLOAT UNIT H-9 - ELEVATION

NOTES:
1. TYPICAL FLOAT UNIT COMPONENTS INCLUDING HSS DIAPHRAGMS, GLULAM SILLS, FLOTATION TUBS, FLOTATION BILLETS, BALLAST TANKS, DIAGONALS AND TYPICAL TIMBER FRAMING ARE SYMMETRIC ABOUT CENTERLINE OF FLOAT UNIT UNLESS OTHERWISE NOTED.
2. RESERVE FLOTATION BILLETS NOT SHOWN IN PLAN FOR CLARITY, SEE DETAILS.

** ELECTRIC PEDESTAL LOCATIONS SHOWN APPROX. SEE PEDESTAL BASE DETAILS FOR LOCATION CONSTRAINTS

REVISIONS

REV.	DATE	DESCRIPTION	DWN.	CKD.	APP.

PND ENGINEERS, INC.
9360 Glacier Highway, Ste. 100
Juneau, Alaska 99801
Phone: 907-586-2093
Fax: 907-586-2099
www.pndengineers.com

DESIGN: MS CHECKED: JLD
DRAWN: WRB APPROVED: CRS
SCALE:
DATE: 2/28/14

STATE OF ALASKA — JOHN L. DeHAVEN — CC-8847 — REGISTERED PROFESSIONAL ENGINEER

CITY & BOROUGH OF JUNEAU, ALASKA
AURORA HARBOR REBUILD - PHASE I
CONTRACT NO. DH 12-160

SHEET TITLE:
HEADWALK FLOAT UNIT H-9

PND PROJECT NO: 122055

6.09
SHEET 56 OF 143

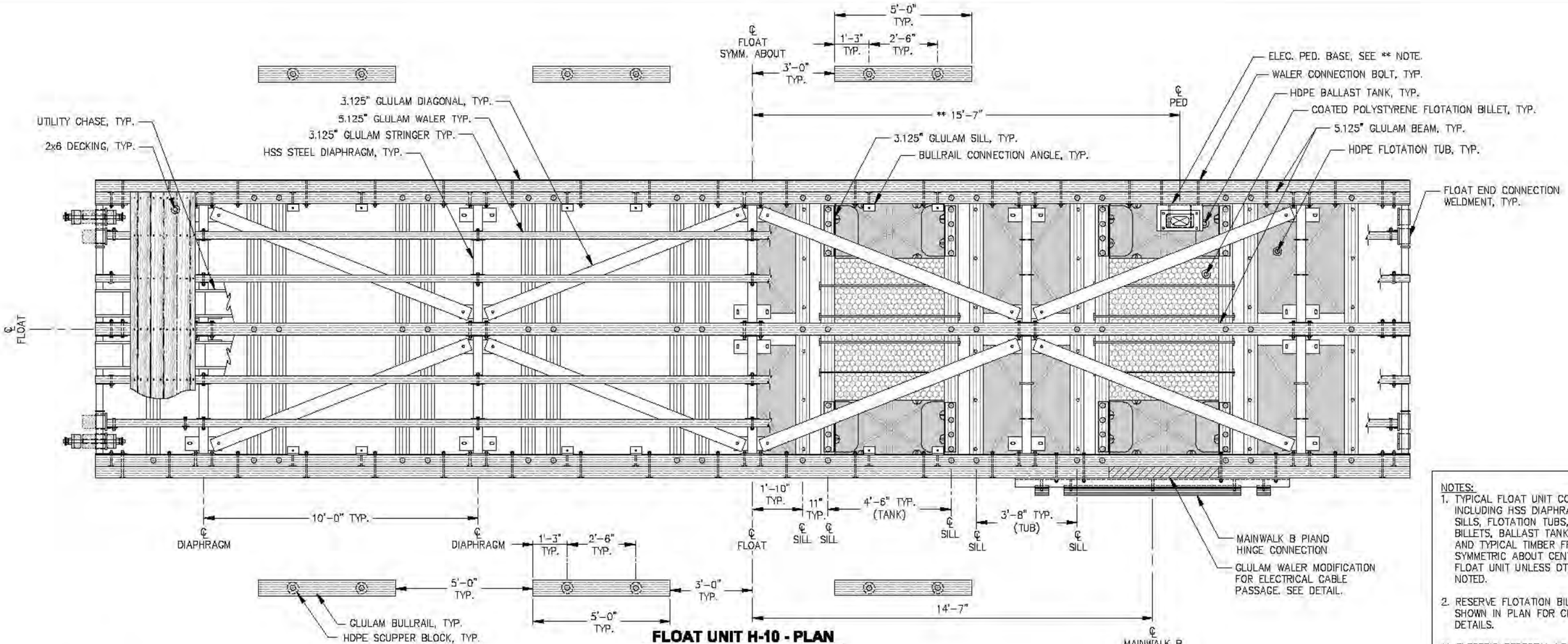

FLOAT UNIT H-10 - PLAN

NOTES:
1. TYPICAL FLOAT UNIT COMPONENTS INCLUDING HSS DIAPHRAGMS, GLULAM SILLS, FLOTATION TUBS, FLOTATION BILLETS, BALLAST TANKS, DIAGONALS AND TYPICAL TIMBER FRAMING ARE SYMMETRIC ABOUT CENTERLINE OF FLOAT UNIT UNLESS OTHERWISE NOTED.
2. RESERVE FLOTATION BILLETS NOT SHOWN IN PLAN FOR CLARITY, SEE DETAILS.

** ELECTRIC PEDESTAL LOCATIONS SHOWN APPROX. SEE PEDESTAL BASE DETAILS FOR LOCATION CONSTRAINTS

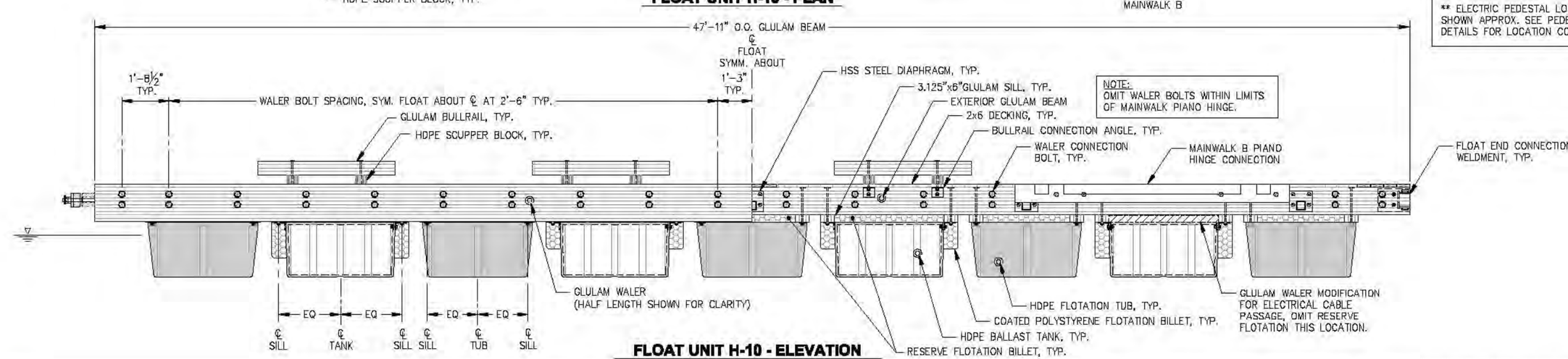

FLOAT UNIT H-10 - ELEVATION

REVISIONS

REV.	DATE	DESCRIPTION	DWN.	CKD.	APP.

P N D ENGINEERS, INC.
9360 Glacier Highway, Ste. 100
Juneau, Alaska 99801
Phone: 907-586-2093
Fax: 907-586-2099
www.pndengineers.com

DESIGN: MS CHECKED: JLD
DRAWN: WRB APPROVED: CRS
SCALE:

STATE OF ALASKA — John L. Dekuth — CC-8847 — REGISTERED PROFESSIONAL ENGINEER
DATE: 2/28/14

CITY & BOROUGH OF JUNEAU, ALASKA
AURORA HARBOR REBUILD - PHASE I
CONTRACT NO. DH 12-160

SHEET TITLE: **HEADWALK FLOAT UNIT H-10**

PND PROJECT NO.: 122055

6.10
SHEET 57 OF 143

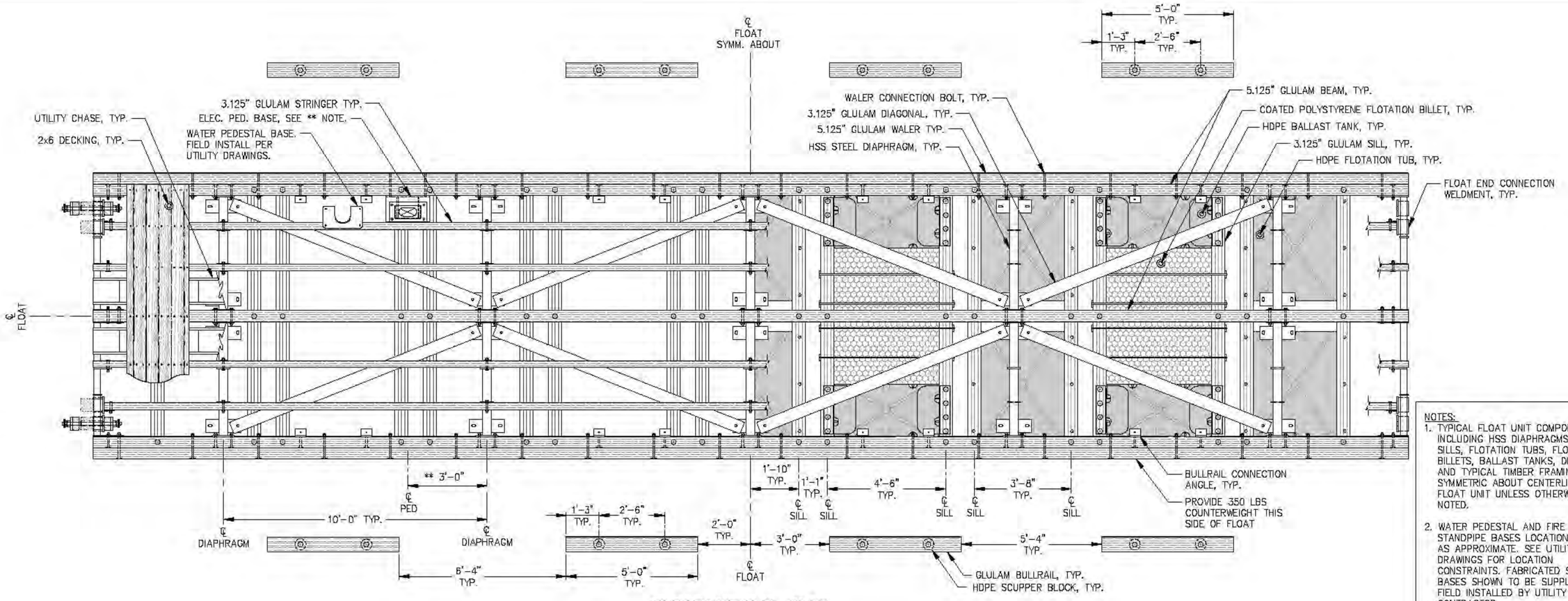

FLOAT UNIT H-11 - PLAN

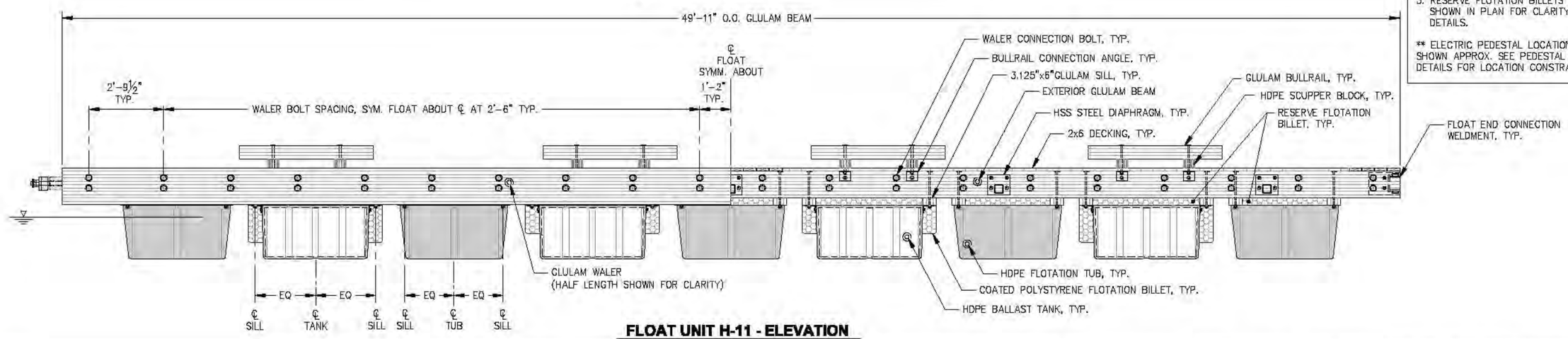

FLOAT UNIT H-11 - ELEVATION

NOTES:
1. TYPICAL FLOAT UNIT COMPONENTS INCLUDING HSS DIAPHRAGMS, GLULAM SILLS, FLOTATION TUBS, FLOTATION BILLETS, BALLAST TANKS, DIAGONALS AND TYPICAL TIMBER FRAMING ARE SYMMETRIC ABOUT CENTERLINE OF FLOAT UNIT UNLESS OTHERWISE NOTED.
2. WATER PEDESTAL AND FIRE STANDPIPE BASES LOCATIONS SHOWN AS APPROXIMATE. SEE UTILITY DRAWINGS FOR LOCATION CONSTRAINTS. FABRICATED STEEL BASES SHOWN TO BE SUPPLIED AND FIELD INSTALLED BY UTILITY CONTRACTOR.
3. RESERVE FLOTATION BILLETS NOT SHOWN IN PLAN FOR CLARITY, SEE DETAILS.

** ELECTRIC PEDESTAL LOCATIONS SHOWN APPROX. SEE PEDESTAL BASE DETAILS FOR LOCATION CONSTRAINTS

REVISIONS

REV.	DATE	DESCRIPTION	DWN.	CKD.	APP.

P N D ENGINEERS, INC.
9360 Glacier Highway, Ste. 100
Juneau, Alaska 99801
Phone: 907-586-2093
Fax: 907-586-2099
www.pndengineers.com

DESIGN: MS CHECKED: JLD
DRAWN: WRB APPROVED: CRS
SCALE:

STATE OF ALASKA — 49TH — John L. DeMuth CE-8847 — REGISTERED PROFESSIONAL ENGINEER
DATE: 2/28/14

CITY & BOROUGH OF JUNEAU, ALASKA
AURORA HARBOR REBUILD - PHASE I
CONTRACT NO. DH 12-160

SHEET TITLE:
HEADWALK FLOAT UNIT H-11

PND PROJECT NO.: 122055

6.11
SHEET 58 OF 143

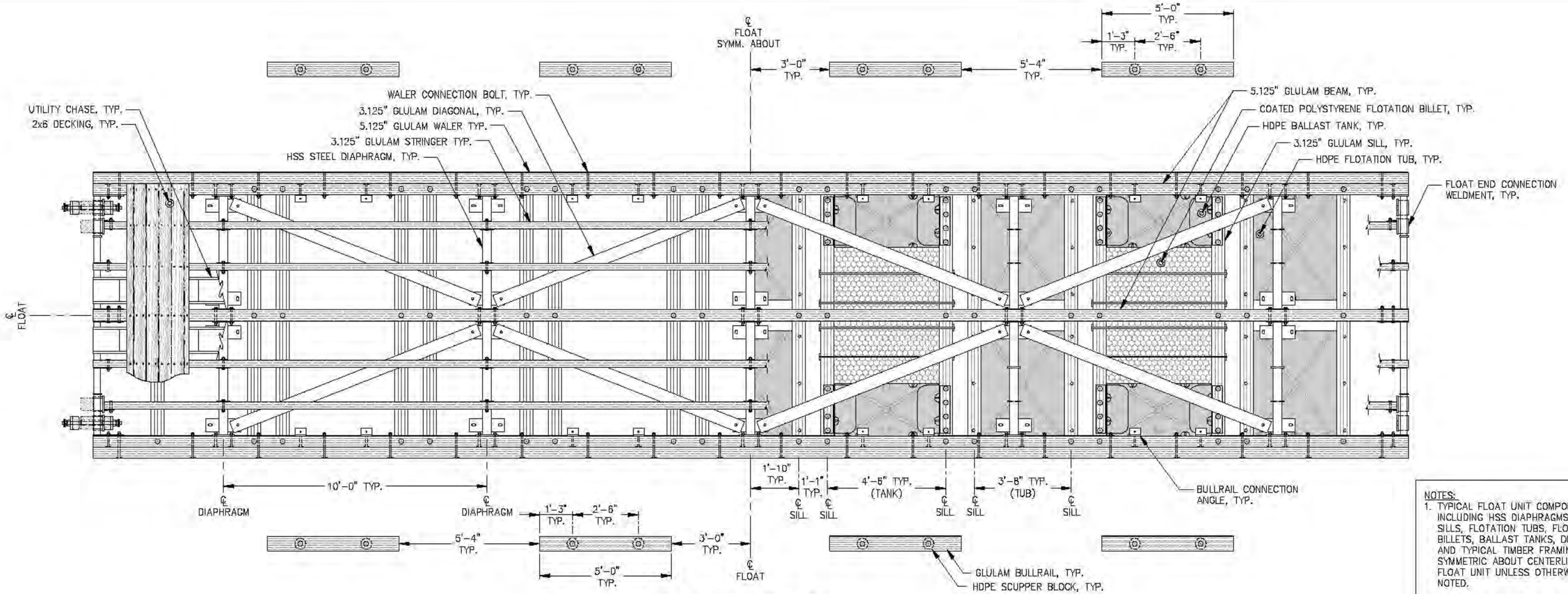

FLOAT UNIT H-12 - PLAN

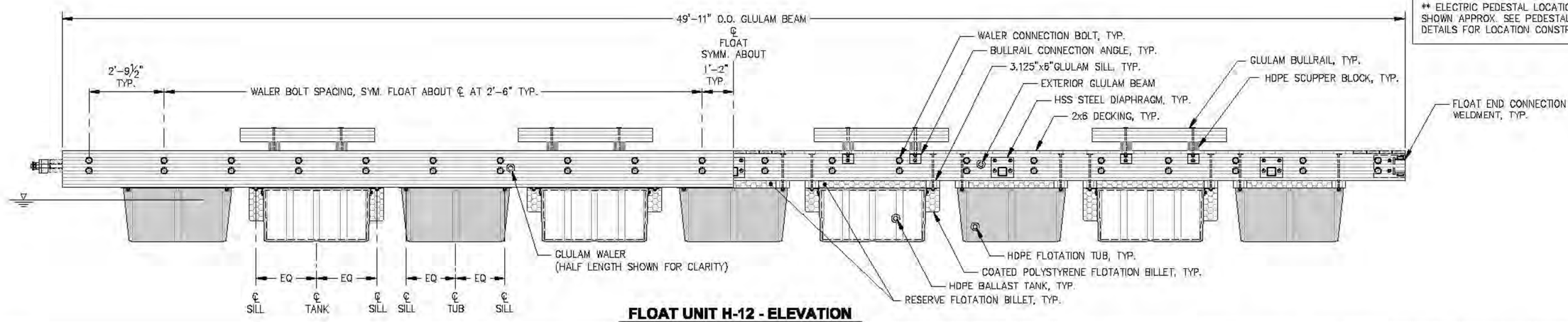

FLOAT UNIT H-12 - ELEVATION

NOTES:
1. TYPICAL FLOAT UNIT COMPONENTS INCLUDING HSS DIAPHRAGMS, GLULAM SILLS, FLOTATION TUBS, FLOTATION BILLETS, BALLAST TANKS, DIAGONALS AND TYPICAL TIMBER FRAMING ARE SYMMETRIC ABOUT CENTERLINE OF FLOAT UNIT UNLESS OTHERWISE NOTED.
2. RESERVE FLOTATION BILLETS NOT SHOWN IN PLAN FOR CLARITY, SEE DETAILS.

** ELECTRIC PEDESTAL LOCATIONS SHOWN APPROX. SEE PEDESTAL BASE DETAILS FOR LOCATION CONSTRAINTS

REVISIONS

REV.	DATE	DESCRIPTION	DWN.	CKD.	APP.

PND ENGINEERS, INC.
9360 Glacier Highway, Ste. 100
Juneau, Alaska 99801
Phone: 907-586-2093
Fax: 907-586-2099
www.pndengineers.com

DESIGN: MS CHECKED: JLD
DRAWN: WRB APPROVED: CRS
SCALE:
DATE: 2/28/14

STATE OF ALASKA — 49TH — John L. Dekkata CC-8847 — REGISTERED PROFESSIONAL ENGINEER

CITY & BOROUGH OF JUNEAU, ALASKA
AURORA HARBOR REBUILD - PHASE I
CONTRACT NO. DH 12-160

SHEET TITLE: HEADWALK FLOAT UNIT H-12

PND PROJECT NO: 122055

6.12
SHEET 58 OF 143

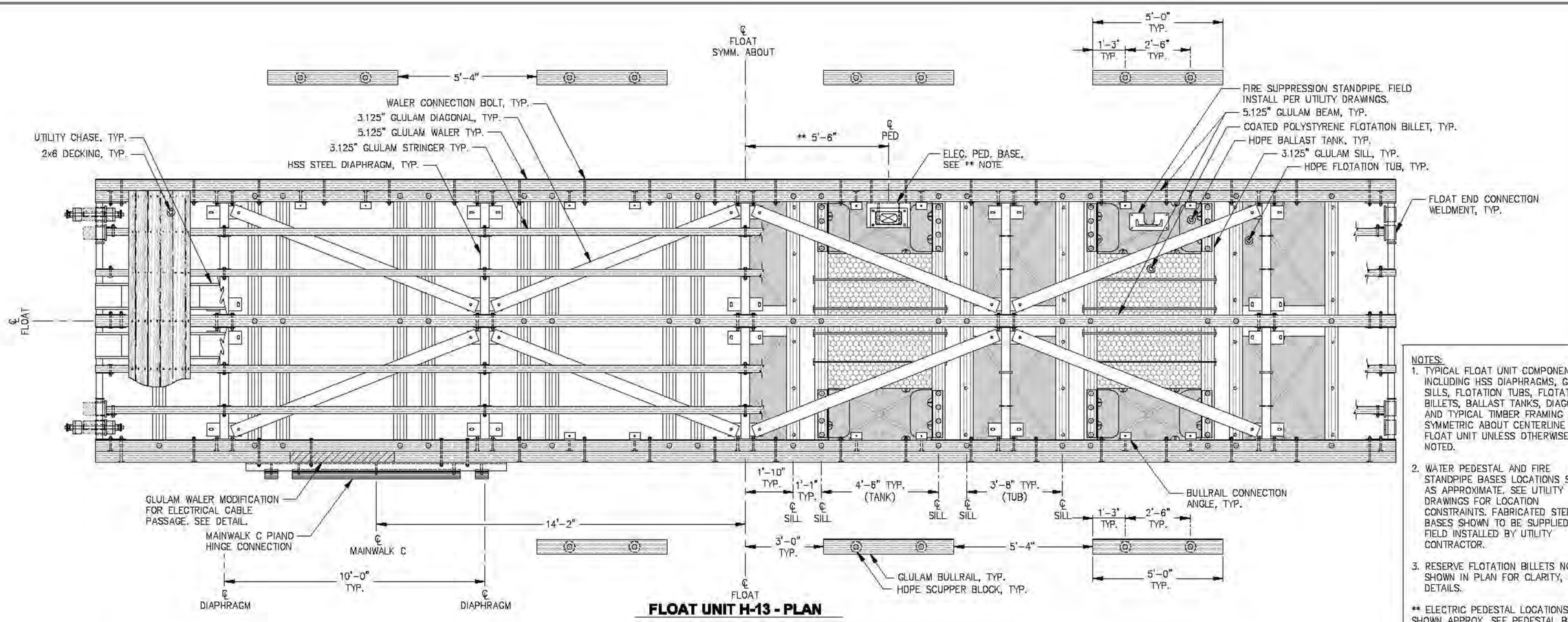

FLOAT UNIT H-13 - PLAN

NOTES:

1. TYPICAL FLOAT UNIT COMPONENTS INCLUDING HSS DIAPHRAGMS, GLULAM SILLS, FLOTATION TUBS, FLOTATION BILLETS, BALLAST TANKS, DIAGONALS AND TYPICAL TIMBER FRAMING ARE SYMMETRIC ABOUT CENTERLINE OF FLOAT UNIT UNLESS OTHERWISE NOTED.
2. WATER PEDESTAL AND FIRE STANDPIPE BASES LOCATIONS SHOWN AS APPROXIMATE. SEE UTILITY DRAWINGS FOR LOCATION CONSTRAINTS. FABRICATED STEEL BASES SHOWN TO BE SUPPLIED AND FIELD INSTALLED BY UTILITY CONTRACTOR.
3. RESERVE FLOTATION BILLETS NOT SHOWN IN PLAN FOR CLARITY, SEE DETAILS.

** ELECTRIC PEDESTAL LOCATIONS SHOWN APPROX. SEE PEDESTAL BASE DETAILS FOR LOCATION CONSTRAINTS

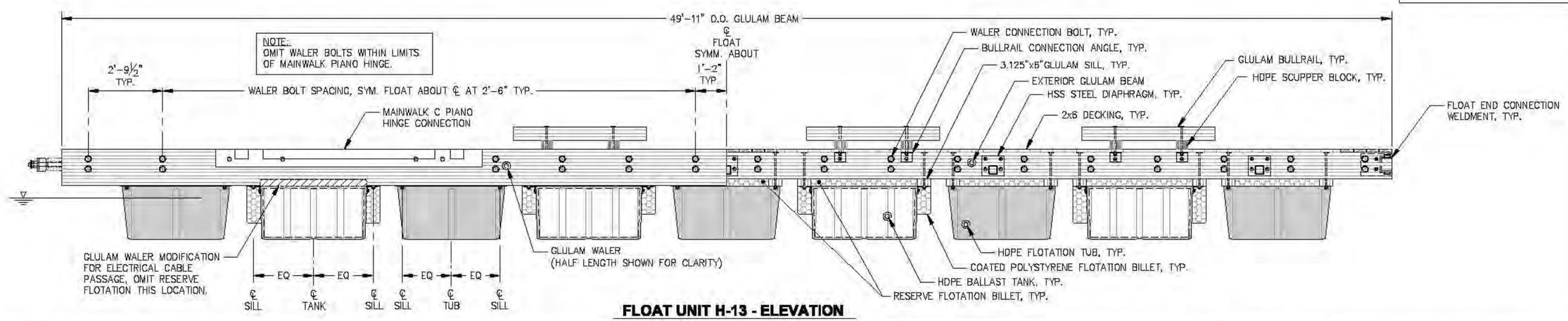

FLOAT UNIT H-13 - ELEVATION

REVISIONS

REV.	DATE	DESCRIPTION	DWN.	CKD.	APP.

PND ENGINEERS, INC.
9360 Glacier Highway, Ste. 100
Juneau, Alaska 99801
Phone: 907-586-2093
Fax: 907-586-2099
www.pndengineers.com

DESIGN: MS CHECKED: JLD
DRAWN: WRB APPROVED: CRS
SCALE:
DATE: 2/28/14

CITY & BOROUGH OF JUNEAU, ALASKA
AURORA HARBOR REBUILD - PHASE I
CONTRACT NO. DH 12-160

SHEET TITLE: HEADWALK FLOAT UNIT H-13

PND PROJECT NO.: 122055

6.13
SHEET 60 OF 143

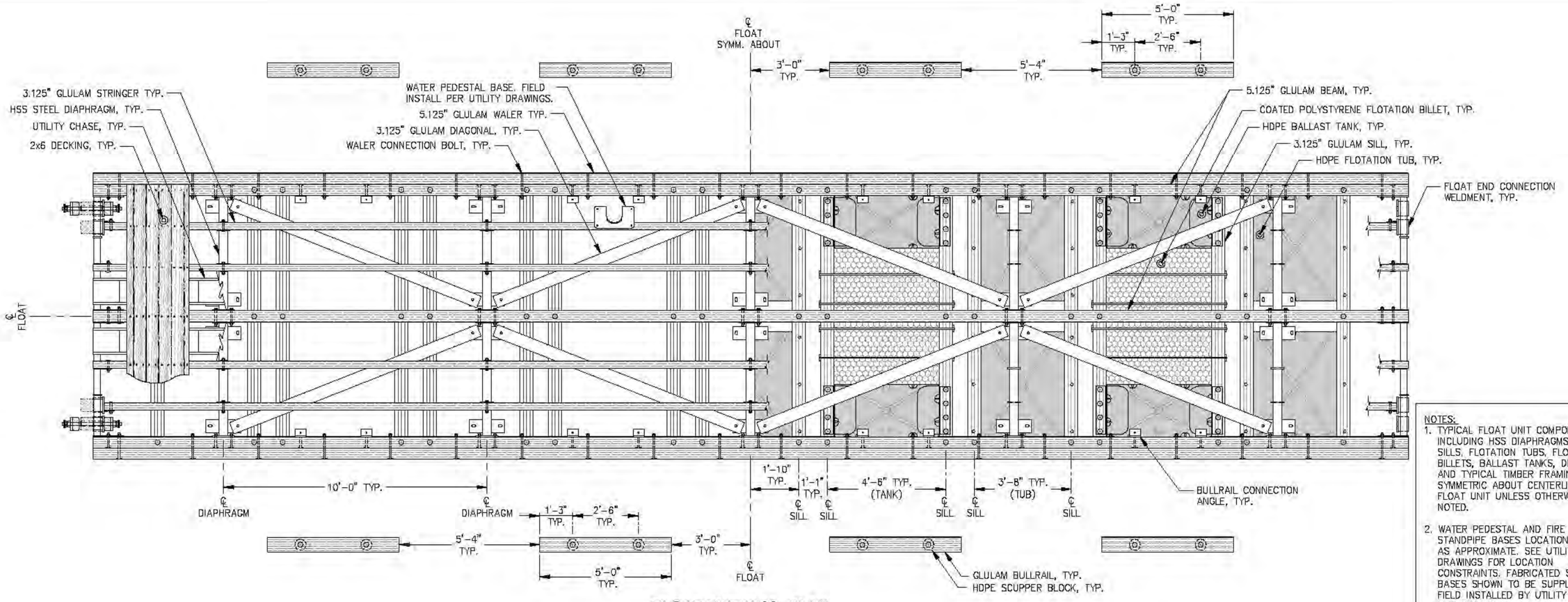

FLOAT UNIT H-14 - PLAN

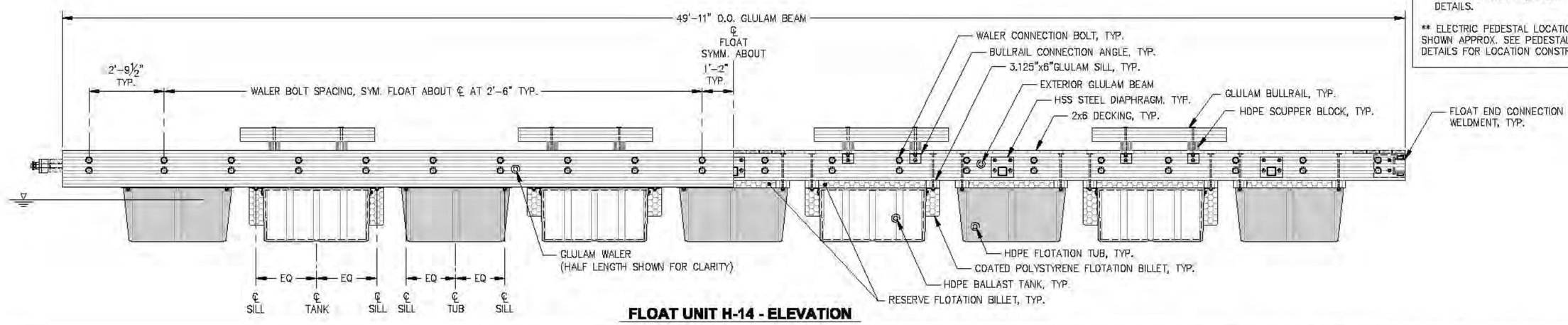

FLOAT UNIT H-14 - ELEVATION

NOTES:
1. TYPICAL FLOAT UNIT COMPONENTS INCLUDING HSS DIAPHRAGMS, GLULAM SILLS, FLOTATION TUBS, FLOTATION BILLETS, BALLAST TANKS, DIAGONALS AND TYPICAL TIMBER FRAMING ARE SYMMETRIC ABOUT CENTERLINE OF FLOAT UNIT UNLESS OTHERWISE NOTED.
2. WATER PEDESTAL AND FIRE STANDPIPE BASES LOCATIONS SHOWN AS APPROXIMATE. SEE UTILITY DRAWINGS FOR LOCATION CONSTRAINTS. FABRICATED STEEL BASES SHOWN TO BE SUPPLIED AND FIELD INSTALLED BY UTILITY CONTRACTOR.
3. RESERVE FLOTATION BILLETS NOT SHOWN IN PLAN FOR CLARITY, SEE DETAILS.

** ELECTRIC PEDESTAL LOCATIONS SHOWN APPROX. SEE PEDESTAL BASE DETAILS FOR LOCATION CONSTRAINTS

REVISIONS

REV.	DATE	DESCRIPTION	DWN.	CKD.	APP.

PND ENGINEERS, INC.
9360 Glacier Highway, Ste. 100
Juneau, Alaska 99801
Phone: 907-586-2093
Fax: 907-586-2099
www.pndengineers.com

DESIGN: MS CHECKED: JLD
DRAWN: WRB APPROVED: CRS
SCALE:
DATE: 2/28/14

STATE OF ALASKA — John L. Dekuh — GC-8847 — REGISTERED PROFESSIONAL ENGINEER

CITY & BOROUGH OF JUNEAU, ALASKA
AURORA HARBOR REBUILD - PHASE I
CONTRACT NO. DH 12-160

SHEET TITLE: HEADWALK FLOAT UNIT H-14

PND PROJECT NO.: 122055

6.14
SHEET 61 OF 143

NOTE:
SALVAGED GANGWAY HINGES TO BE FIELD INSTALLED TO NEW FLOAT. SEE HINGE CONNECTION DETAILS (SIM). CONTRACTOR TO COORDINATE w/ FABRICATOR TO SUPPLY LOOSE DECK PLANKS IN VICINITY OF HINGE TO FACILITATE FIELD INSTALLATION.

NOTE:
OMIT UPPER WALER BOLT WITHIN LIMITS OF SALVAGED GANGWAY LANDING FLOAT HINGE, TYP. (4)

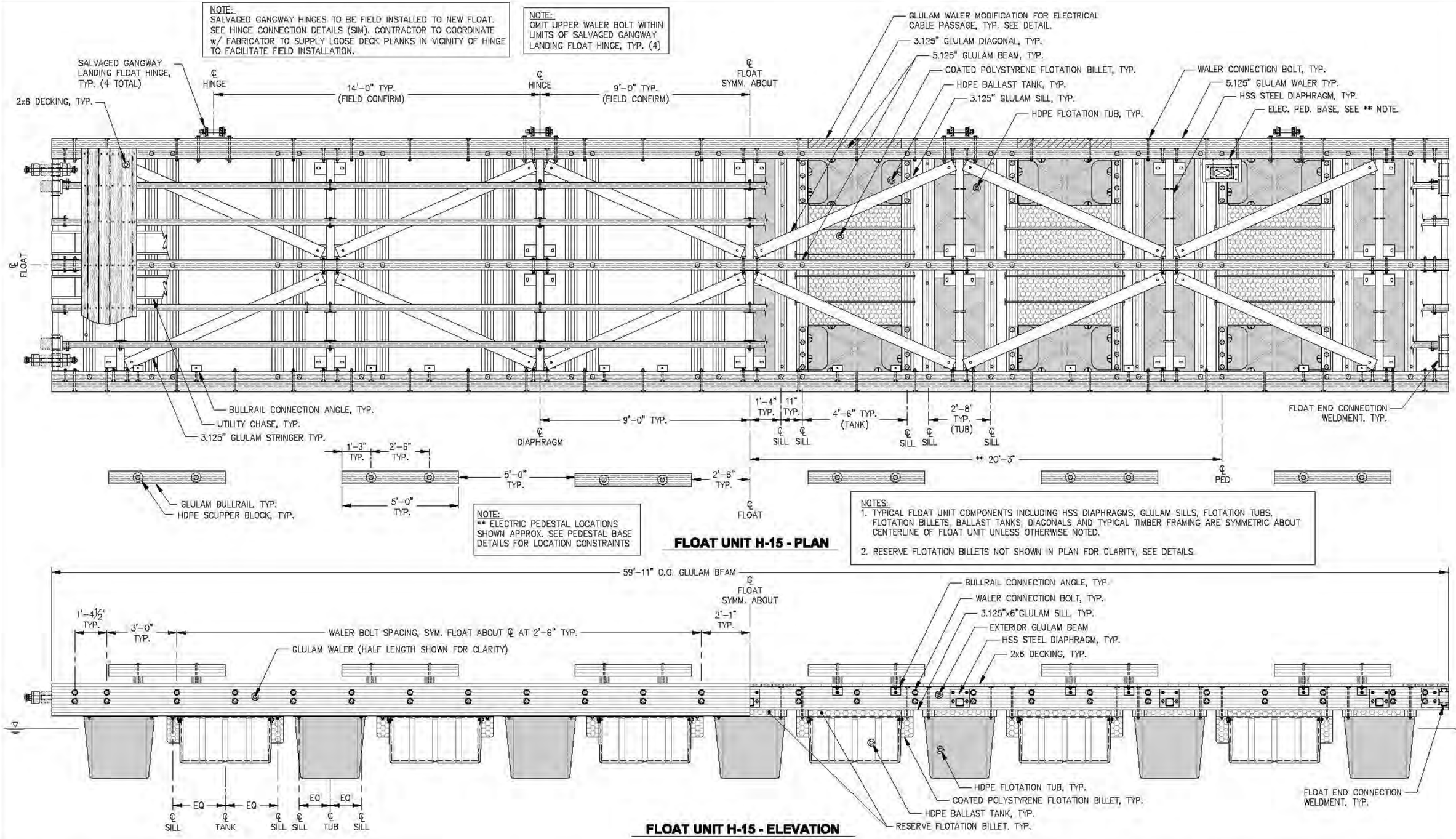

NOTE:
** ELECTRIC PEDESTAL LOCATIONS SHOWN APPROX. SEE PEDESTAL BASE DETAILS FOR LOCATION CONSTRAINTS

FLOAT UNIT H-15 - PLAN

NOTES:
1. TYPICAL FLOAT UNIT COMPONENTS INCLUDING HSS DIAPHRAGMS, GLULAM SILLS, FLOTATION TUBS, FLOTATION BILLETS, BALLAST TANKS, DIAGONALS AND TYPICAL TIMBER FRAMING ARE SYMMETRIC ABOUT CENTERLINE OF FLOAT UNIT UNLESS OTHERWISE NOTED.
2. RESERVE FLOTATION BILLETS NOT SHOWN IN PLAN FOR CLARITY, SEE DETAILS.

FLOAT UNIT H-15 - ELEVATION

REVISIONS

REV.	DATE	DESCRIPTION	DWN.	CKD.	APP.

PND ENGINEERS, INC.
9360 Glacier Highway, Ste. 100
Juneau, Alaska 99801
Phone: 907-586-2093
Fax: 907-586-2099
www.pndengineers.com

DESIGN: MS CHECKED: JLD
DRAWN: WRB APPROVED: CRS
SCALE:
DATE: 2/28/14

STATE OF ALASKA — 49TH — John L. DeMuth CE-8847 — REGISTERED PROFESSIONAL ENGINEER

CITY & BOROUGH OF JUNEAU, ALASKA
AURORA HARBOR REBUILD - PHASE I
CONTRACT NO. DH 12-160

SHEET TITLE:
HEADWALK FLOAT UNIT H-15

PND PROJECT NO: 122055

6.15
SHEET 62 OF 143

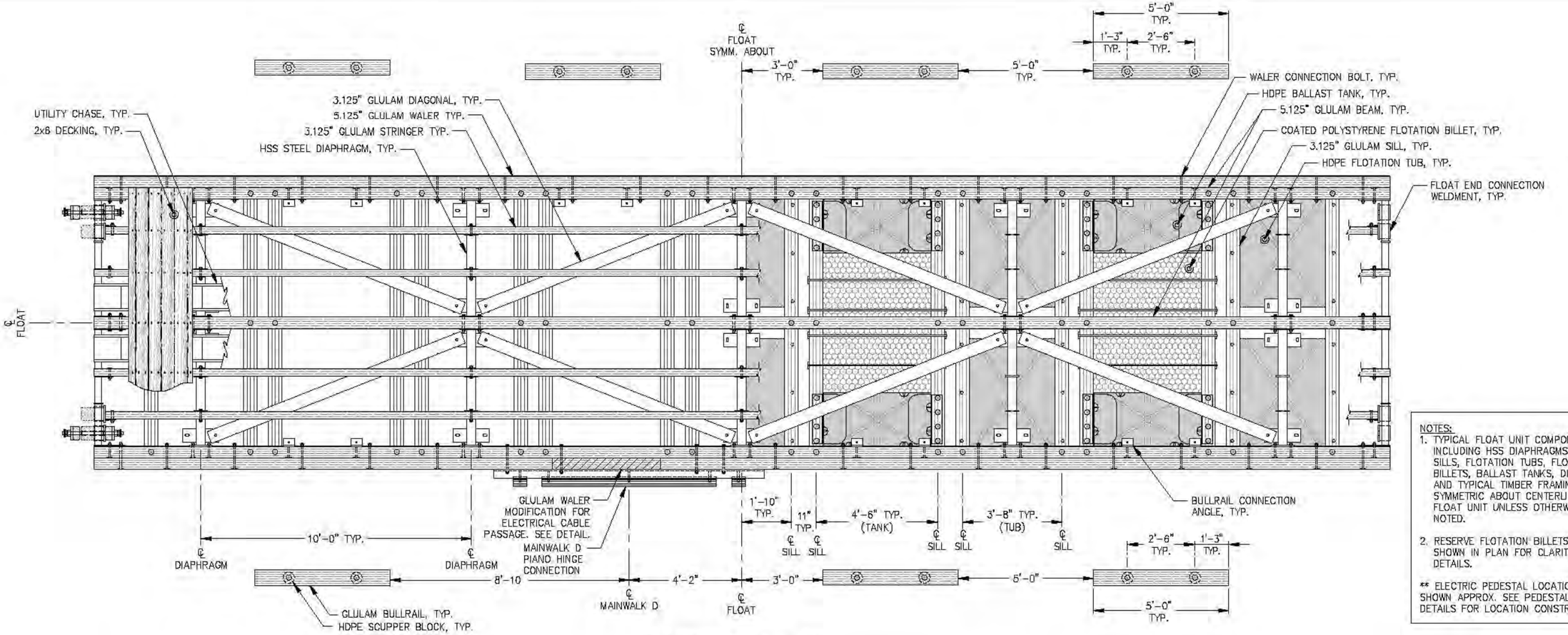

NOTES:
1. TYPICAL FLOAT UNIT COMPONENTS INCLUDING HSS DIAPHRAGMS, GLULAM SILLS, FLOTATION TUBS, FLOTATION BILLETS, BALLAST TANKS, DIAGONALS AND TYPICAL TIMBER FRAMING ARE SYMMETRIC ABOUT CENTERLINE OF FLOAT UNIT UNLESS OTHERWISE NOTED.
2. RESERVE FLOTATION BILLETS NOT SHOWN IN PLAN FOR CLARITY, SEE DETAILS.

** ELECTRIC PEDESTAL LOCATIONS SHOWN APPROX. SEE PEDESTAL BASE DETAILS FOR LOCATION CONSTRAINTS

FLOAT UNIT H-16 - PLAN

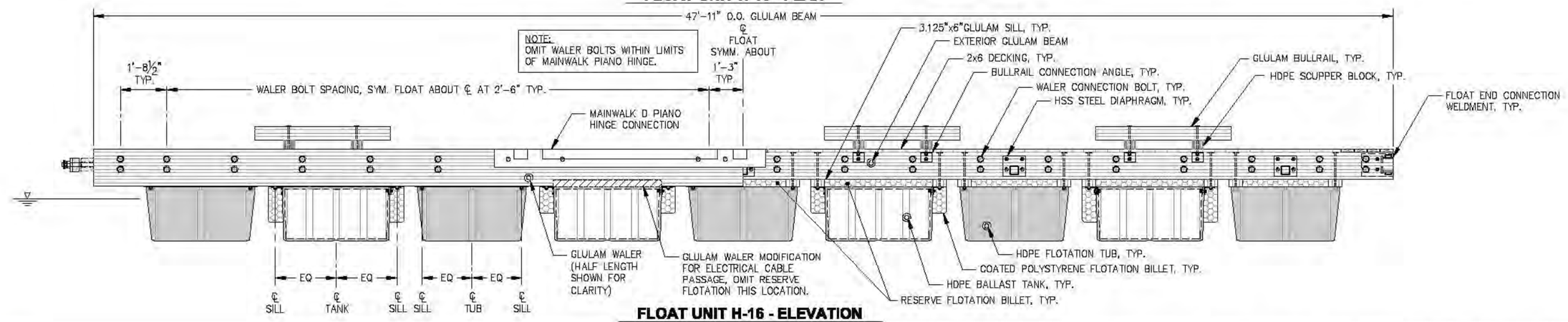

FLOAT UNIT H-16 - ELEVATION

REVISIONS

REV.	DATE	DESCRIPTION	DWN.	CKD.	APP.

P N D ENGINEERS, INC.
9360 Glacier Highway, Ste. 100
Juneau, Alaska 99801
Phone: 907-586-2093
Fax: 907-586-2099
www.pndengineers.com

DESIGN: MS CHECKED: JLD
DRAWN: WRB APPROVED: CRS
SCALE:

STATE OF ALASKA — John L. Dekuth — CC-8847 — REGISTERED PROFESSIONAL ENGINEER
DATE: 2/28/14

CITY & BOROUGH OF JUNEAU, ALASKA
AURORA HARBOR REBUILD - PHASE I
CONTRACT NO. DH 12-160

SHEET TITLE:
HEADWALK FLOAT UNIT H-16

PND PROJECT NO.: 122055

6.16
SHEET 63 OF 143

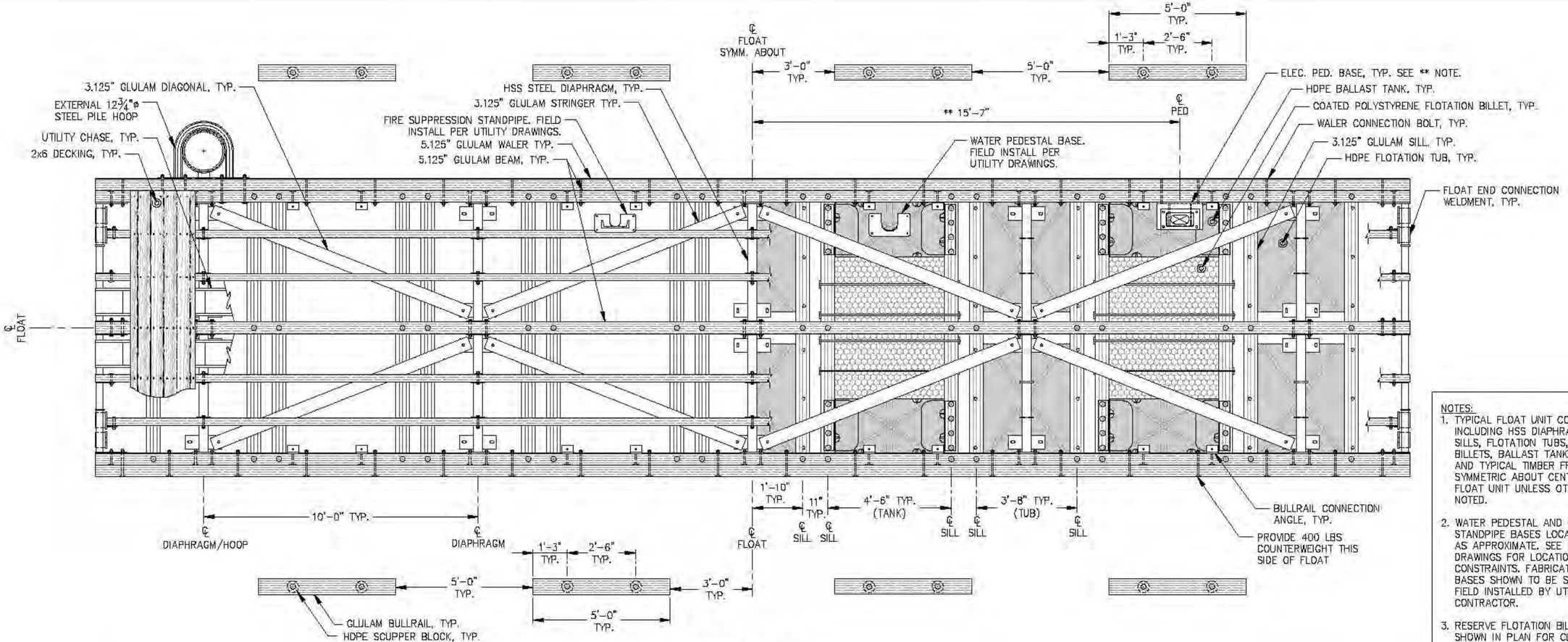

NOTES:
1. TYPICAL FLOAT UNIT COMPONENTS INCLUDING HSS DIAPHRAGMS, GLULAM SILLS, FLOTATION TUBS, FLOTATION BILLETS, BALLAST TANKS, DIAGONALS AND TYPICAL TIMBER FRAMING ARE SYMMETRIC ABOUT CENTERLINE OF FLOAT UNIT UNLESS OTHERWISE NOTED.
2. WATER PEDESTAL AND FIRE STANDPIPE BASES LOCATIONS SHOWN AS APPROXIMATE. SEE UTILITY DRAWINGS FOR LOCATION CONSTRAINTS. FABRICATED STEEL BASES SHOWN TO BE SUPPLIED AND FIELD INSTALLED BY UTILITY CONTRACTOR.
3. RESERVE FLOTATION BILLETS NOT SHOWN IN PLAN FOR CLARITY, SEE DETAILS.

** ELECTRIC PEDESTAL LOCATIONS SHOWN APPROX. SEE PEDESTAL BASE DETAILS FOR LOCATION CONSTRAINTS

FLOAT UNIT H-17 - PLAN

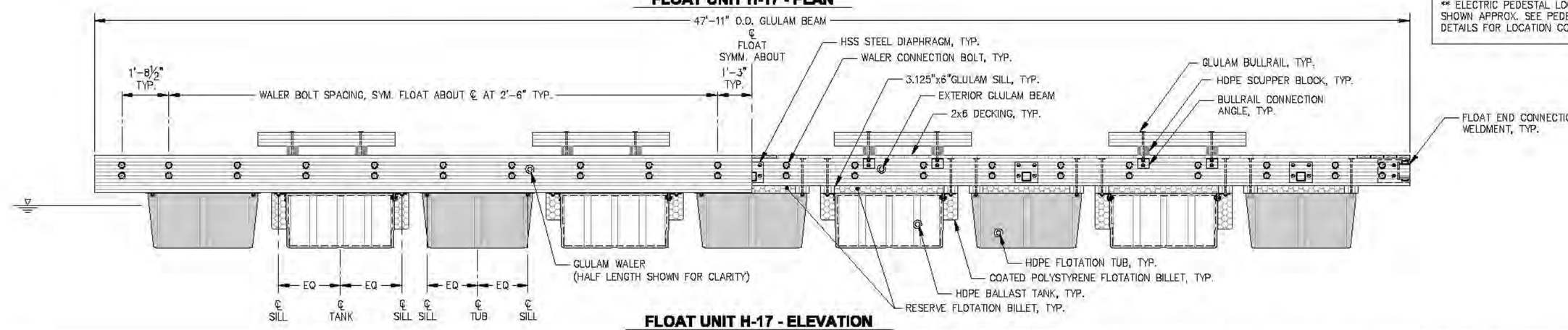

FLOAT UNIT H-17 - ELEVATION

REVISIONS

REV.	DATE	DESCRIPTION	DWN.	CKD.	APP.

PND ENGINEERS, INC.
9360 Glacier Highway, Ste. 100
Juneau, Alaska 99801
Phone: 907-586-2093
Fax: 907-586-2099
www.pndengineers.com

DESIGN: MS CHECKED: JLD
DRAWN: WRB APPROVED: CRS
SCALE:
DATE: 2/28/14

CITY & BOROUGH OF JUNEAU, ALASKA
AURORA HARBOR REBUILD - PHASE I
CONTRACT NO. DH 12-160

SHEET TITLE:
HEADWALK FLOAT UNIT H-17

PND PROJECT NO.: 122055

6.17
SHEET 64 OF 143

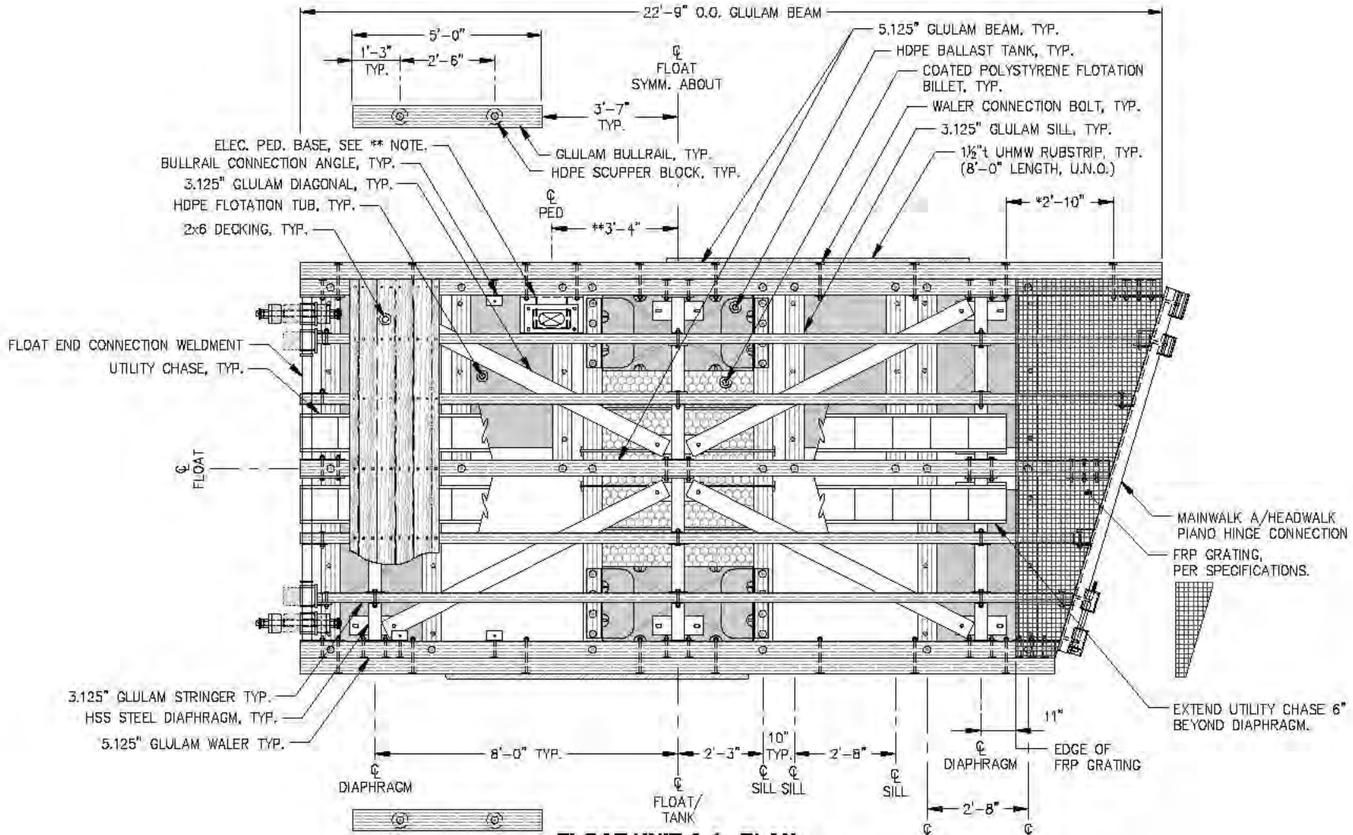

FLOAT UNIT A-1 - PLAN

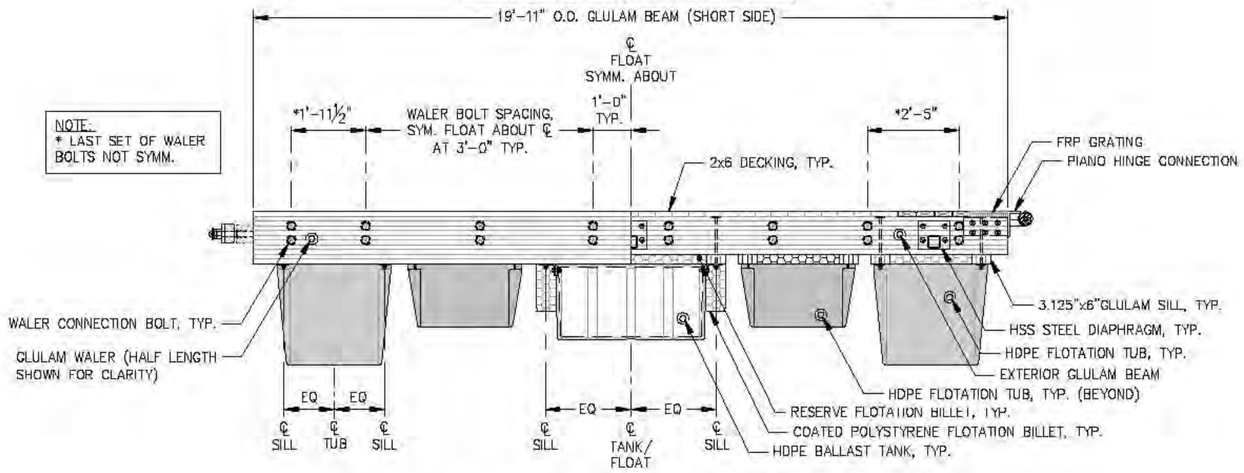

FLOAT UNIT A-1 - ELEVATION

NOTES:
1. TYPICAL FLOAT UNIT COMPONENTS INCLUDING HSS DIAPHRAGMS, GLULAM SILLS, FLOTATION TUBS, FLOTATION BILLETS, BALLAST TANKS, DIAGONALS AND TYPICAL TIMBER FRAMING ARE SYMMETRIC ABOUT CENTERLINE OF FLOAT UNIT UNLESS OTHERWISE NOTED.
2. RESERVE FLOTATION BILLETS NOT SHOWN IN PLAN FOR CLARITY, SEE DETAILS.

** ELECTRIC PEDESTAL LOCATIONS SHOWN APPROX. SEE PEDESTAL BASE DETAILS FOR LOCATION CONSTRAINTS

REVISIONS

REV.	DATE	DESCRIPTION	DWN.	CKD.	APP.

PND ENGINEERS, INC.
9360 Glacier Highway, Ste. 100
Juneau, Alaska 99801
Phone: 907-586-2093
Fax: 907-586-2099
www.pndengineers.com

DESIGN: MS CHECKED: JLD
DRAWN: WRB APPROVED: CRS
SCALE:
DATE: 2/28/14

CITY & BOROUGH OF JUNEAU, ALASKA
AURORA HARBOR REBUILD - PHASE I
CONTRACT NO. DH 12-160

SHEET TITLE: MAINWALK A FLOAT UNIT A-1

PND PROJECT NO.: 122055

6.18
SHEET 65 OF 143

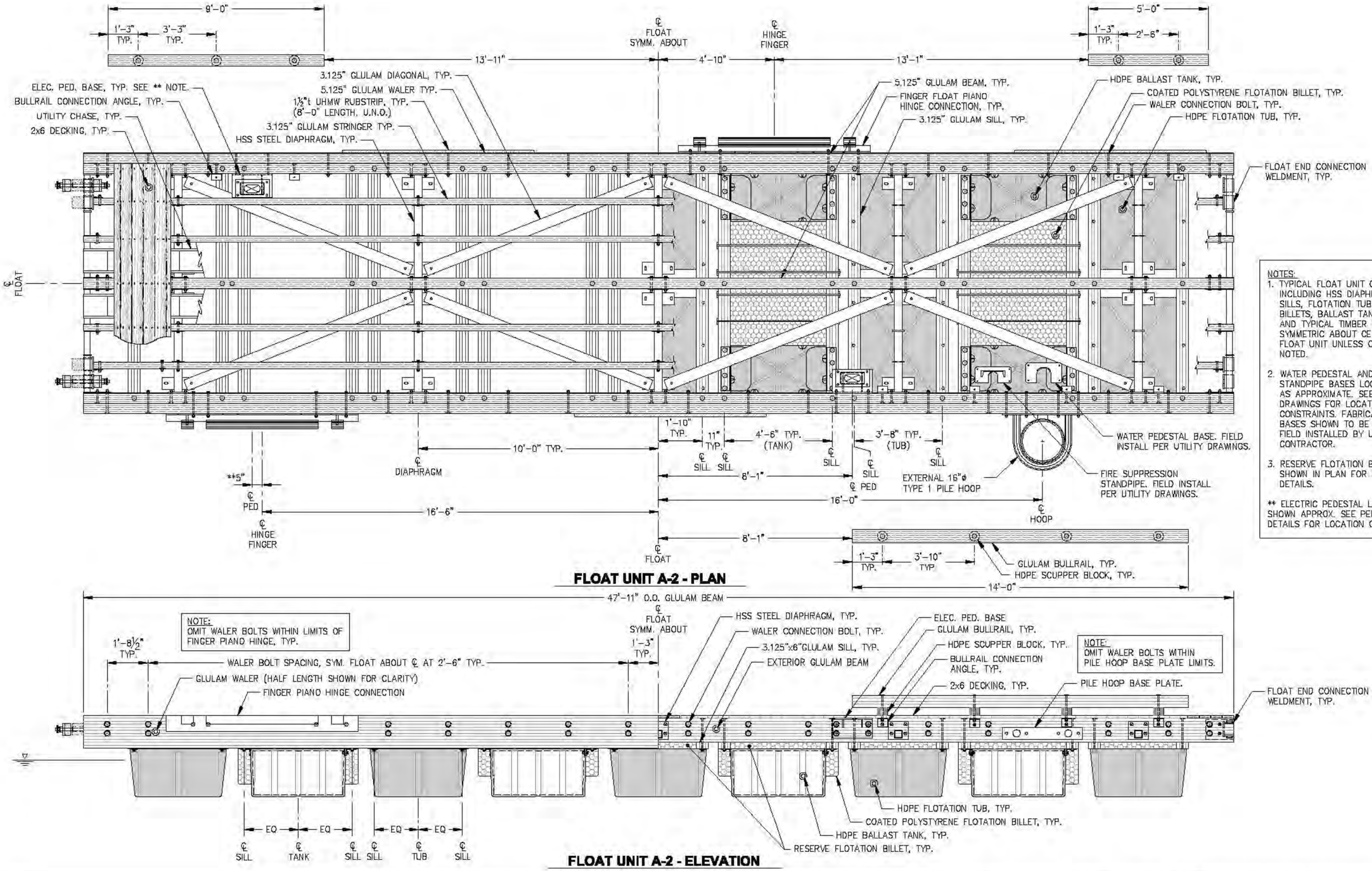

FLOAT UNIT A-2 - PLAN

FLOAT UNIT A-2 - ELEVATION

NOTES:
1. TYPICAL FLOAT UNIT COMPONENTS INCLUDING HSS DIAPHRAGMS, GLULAM SILLS, FLOTATION TUBS, FLOTATION BILLETS, BALLAST TANKS, DIAGONALS AND TYPICAL TIMBER FRAMING ARE SYMMETRIC ABOUT CENTERLINE OF FLOAT UNIT UNLESS OTHERWISE NOTED.
2. WATER PEDESTAL AND FIRE STANDPIPE BASES LOCATIONS SHOWN AS APPROXIMATE. SEE UTILITY DRAWINGS FOR LOCATION CONSTRAINTS. FABRICATED STEEL BASES SHOWN TO BE SUPPLIED AND FIELD INSTALLED BY UTILITY CONTRACTOR.
3. RESERVE FLOTATION BILLETS NOT SHOWN IN PLAN FOR CLARITY, SEE DETAILS.

** ELECTRIC PEDESTAL LOCATIONS SHOWN APPROX. SEE PEDESTAL BASE DETAILS FOR LOCATION CONSTRAINTS

REVISIONS

REV.	DATE	DESCRIPTION	DWN.	CKD.	APP.

PND ENGINEERS, INC.
9360 Glacier Highway, Ste. 100
Juneau, Alaska 99801
Phone: 907-586-2093
Fax: 907-586-2099
www.pndengineers.com

DESIGN: MS CHECKED: JLD
DRAWN: WRB APPROVED: CRS
SCALE:
DATE: 2/28/14

STATE OF ALASKA — John L. DeMuth CC-8847 — REGISTERED PROFESSIONAL ENGINEER

CITY & BOROUGH OF JUNEAU, ALASKA
AURORA HARBOR REBUILD - PHASE I
CONTRACT NO. DH 12-160

SHEET TITLE: MAINWALK A FLOAT UNIT A-2

PND PROJECT NO.: 122055

6.19
SHEET 66 OF 143

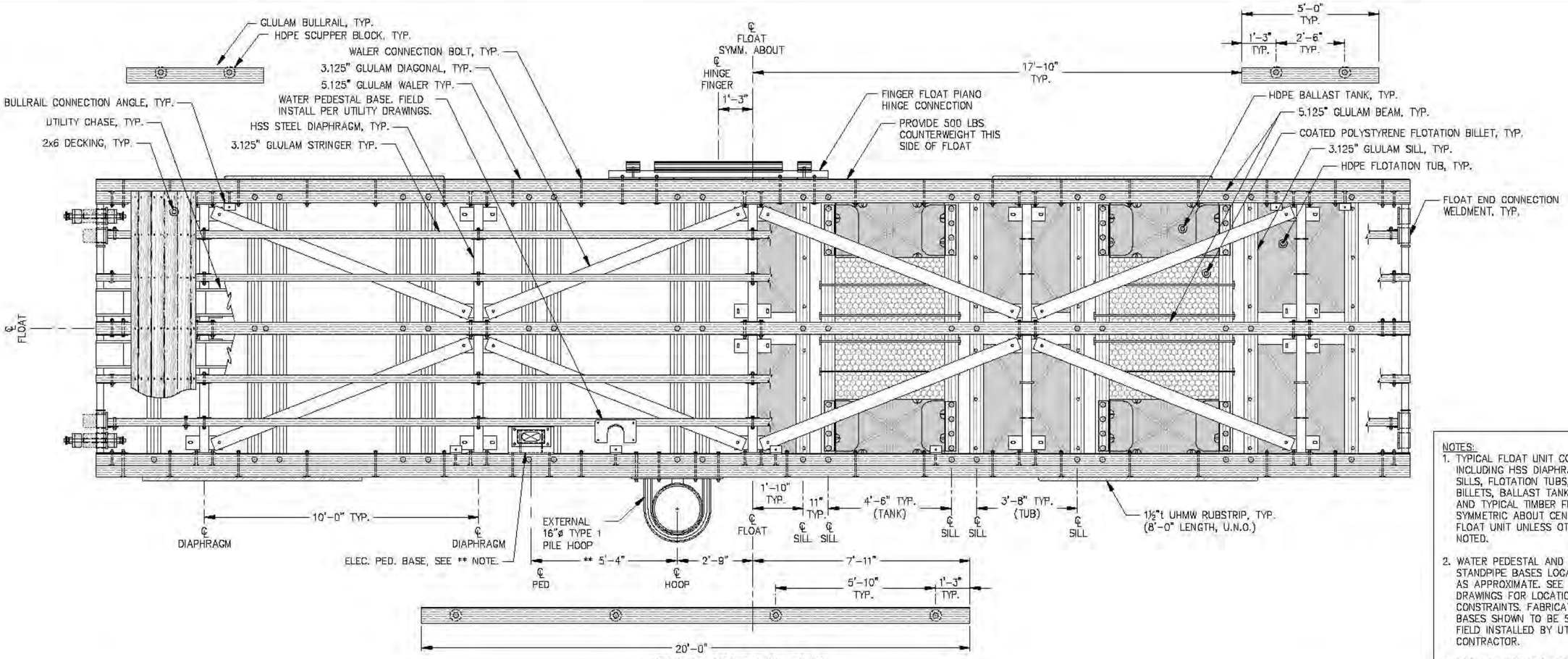

FLOAT UNIT A-3 - PLAN

NOTES:
1. TYPICAL FLOAT UNIT COMPONENTS INCLUDING HSS DIAPHRAGMS, GLULAM SILLS, FLOTATION TUBS, FLOTATION BILLETS, BALLAST TANKS, DIAGONALS AND TYPICAL TIMBER FRAMING ARE SYMMETRIC ABOUT CENTERLINE OF FLOAT UNIT UNLESS OTHERWISE NOTED.
2. WATER PEDESTAL AND FIRE STANDPIPE BASES LOCATIONS SHOWN AS APPROXIMATE. SEE UTILITY DRAWINGS FOR LOCATION CONSTRAINTS. FABRICATED STEEL BASES SHOWN TO BE SUPPLIED AND FIELD INSTALLED BY UTILITY CONTRACTOR.
3. RESERVE FLOTATION BILLETS NOT SHOWN IN PLAN FOR CLARITY, SEE DETAILS.

** ELECTRIC PEDESTAL LOCATIONS SHOWN APPROX. SEE PEDESTAL BASE DETAILS FOR LOCATION CONSTRAINTS

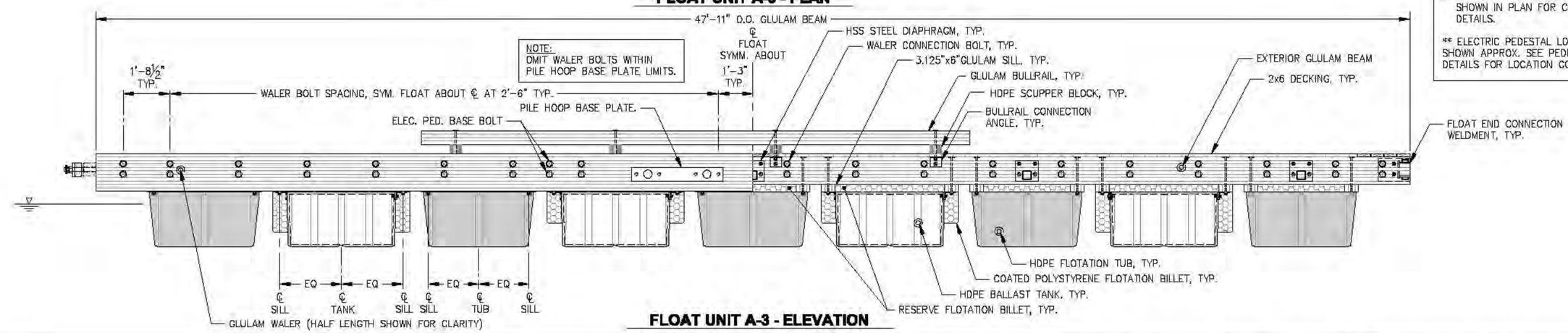

FLOAT UNIT A-3 - ELEVATION

REVISIONS

REV.	DATE	DESCRIPTION	DWN.	CKD.	APP.

P N D ENGINEERS, INC.
9360 Glacier Highway, Ste. 100
Juneau, Alaska 99801
Phone: 907-586-2093
Fax: 907-586-2099
www.pndengineers.com

DESIGN: MS CHECKED: JLD
DRAWN: WRB APPROVED: CRS
SCALE:
DATE: 2/28/14

STATE OF ALASKA — John L. DeMuth CC-8847 — PROFESSIONAL ENGINEER

CITY & BOROUGH OF JUNEAU, ALASKA
AURORA HARBOR REBUILD - PHASE I
CONTRACT NO. DH 12-160

SHEET TITLE: **MAINWALK A FLOAT UNIT A-3**

PND PROJECT NO.: 122055

6.20
SHEET 67 OF 143

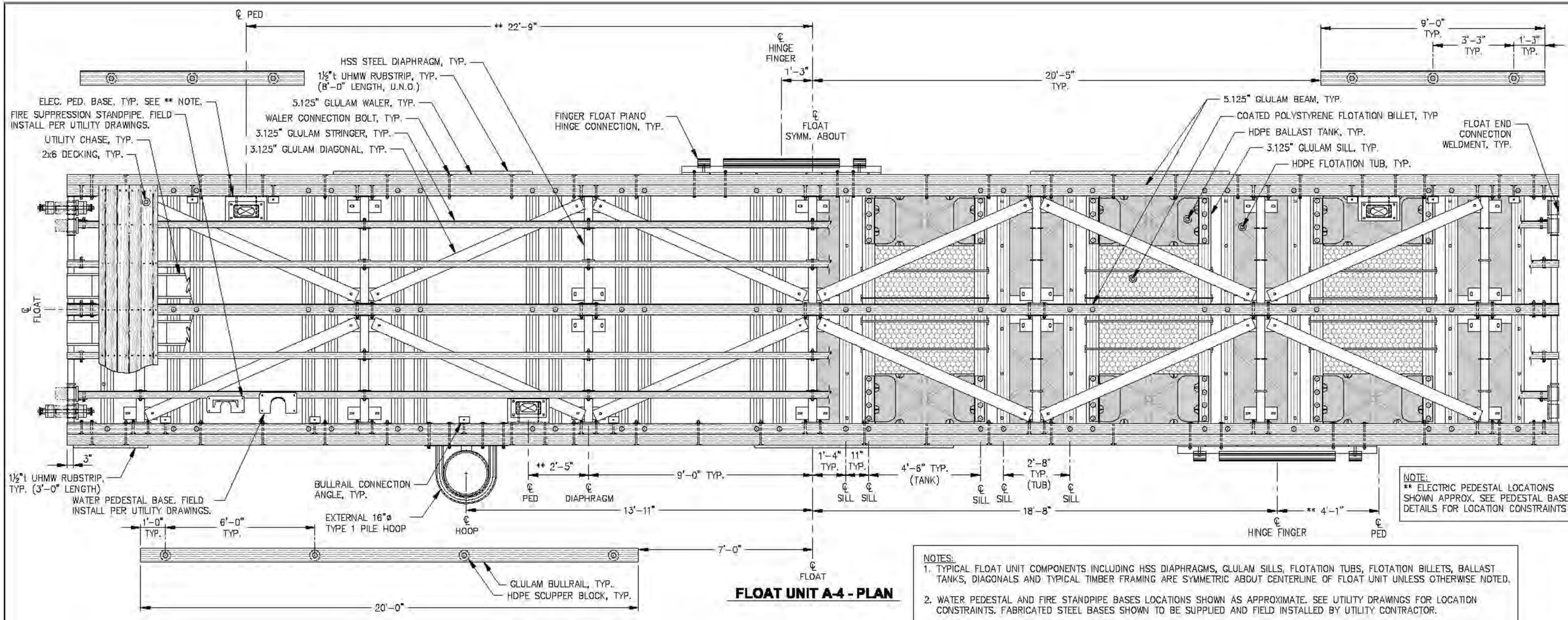

NOTE:
** ELECTRIC PEDESTAL LOCATIONS SHOWN APPROX. SEE PEDESTAL BASE DETAILS FOR LOCATION CONSTRAINTS

FLOAT UNIT A-4 - PLAN

NOTES:
1. TYPICAL FLOAT UNIT COMPONENTS INCLUDING HSS DIAPHRAGMS, GLULAM SILLS, FLOTATION TUBS, FLOTATION BILLETS, BALLAST TANKS, DIAGONALS AND TYPICAL TIMBER FRAMING ARE SYMMETRIC ABOUT CENTERLINE OF FLOAT UNIT UNLESS OTHERWISE NOTED.
2. WATER PEDESTAL AND FIRE STANDPIPE BASES LOCATIONS SHOWN AS APPROXIMATE. SEE UTILITY DRAWINGS FOR LOCATION CONSTRAINTS. FABRICATED STEEL BASES SHOWN TO BE SUPPLIED AND FIELD INSTALLED BY UTILITY CONTRACTOR.
3. RESERVE FLOTATION BILLETS NOT SHOWN IN PLAN FOR CLARITY, SEE DETAILS.

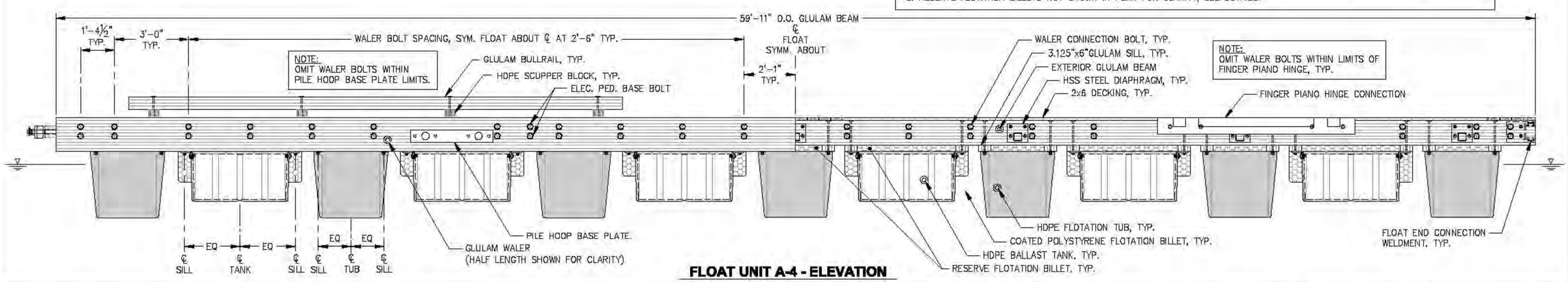

FLOAT UNIT A-4 - ELEVATION

REVISIONS

REV.	DATE	DESCRIPTION	DWN.	CKD.	APP.

P N D ENGINEERS, INC.
9360 Glacier Highway, Ste. 100
Juneau, Alaska 99801
Phone: 907-586-2093
Fax: 907-586-2099
www.pndengineers.com

DESIGN: MS CHECKED: JLD
DRAWN: WRB APPROVED: CRS
SCALE:

STATE OF ALASKA — 4TH — John L. DeMuth CE-8847 — REGISTERED PROFESSIONAL ENGINEER
DATE: 2/28/14

CITY & BOROUGH OF JUNEAU, ALASKA
AURORA HARBOR REBUILD - PHASE I
CONTRACT NO. DH 12-160

SHEET TITLE:
MAINWALK A FLOAT UNIT A-4

PND PROJECT NO.: 122055

6.21
SHEET 68 OF 143

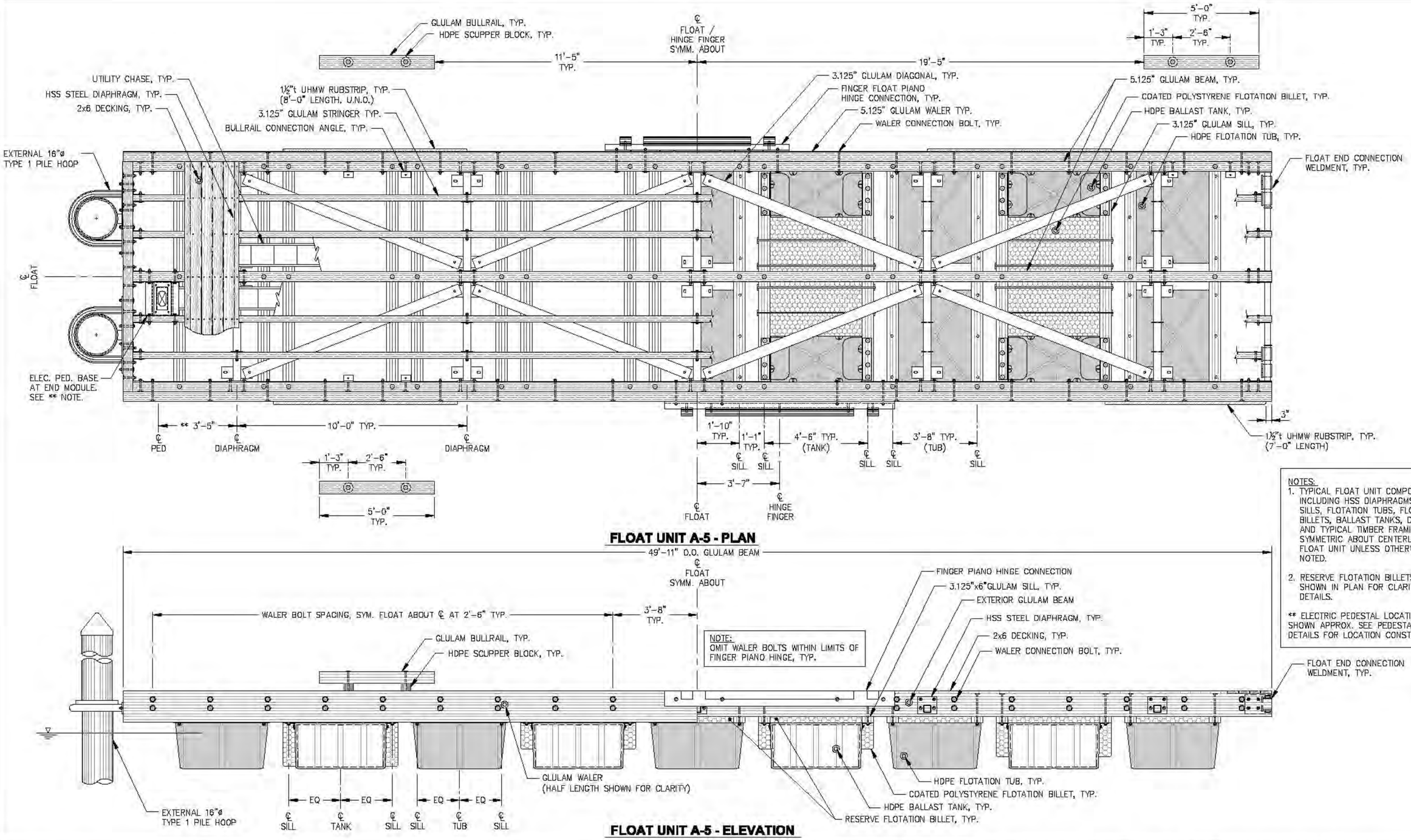

FLOAT UNIT A-5 - PLAN

FLOAT UNIT A-5 - ELEVATION

NOTES:
1. TYPICAL FLOAT UNIT COMPONENTS INCLUDING HSS DIAPHRAGMS, GLULAM SILLS, FLOTATION TUBS, FLOTATION BILLETS, BALLAST TANKS, DIAGONALS AND TYPICAL TIMBER FRAMING ARE SYMMETRIC ABOUT CENTERLINE OF FLOAT UNIT UNLESS OTHERWISE NOTED.
2. RESERVE FLOTATION BILLETS NOT SHOWN IN PLAN FOR CLARITY, SEE DETAILS.

** ELECTRIC PEDESTAL LOCATIONS SHOWN APPROX. SEE PEDESTAL BASE DETAILS FOR LOCATION CONSTRAINTS

REVISIONS

REV.	DATE	DESCRIPTION	DWN.	CKD.	APP.

P N D ENGINEERS, INC.
9360 Glacier Highway, Ste. 100
Juneau, Alaska 99801
Phone: 907-586-2093
Fax: 907-586-2099
www.pndengineers.com

DESIGN: MS CHECKED: JLD
DRAWN: WRB APPROVED: CRS
SCALE:
DATE: 2/28/14

STATE OF ALASKA — John L. Dellatti — CC-8847 — REGISTERED PROFESSIONAL ENGINEER

CITY & BOROUGH OF JUNEAU, ALASKA
AURORA HARBOR REBUILD - PHASE I
CONTRACT NO. DH 12-160

SHEET TITLE: **MAINWALK A FLOAT UNIT A-5**

PND PROJECT NO.: 122055

6.22
SHEET 88 OF 143

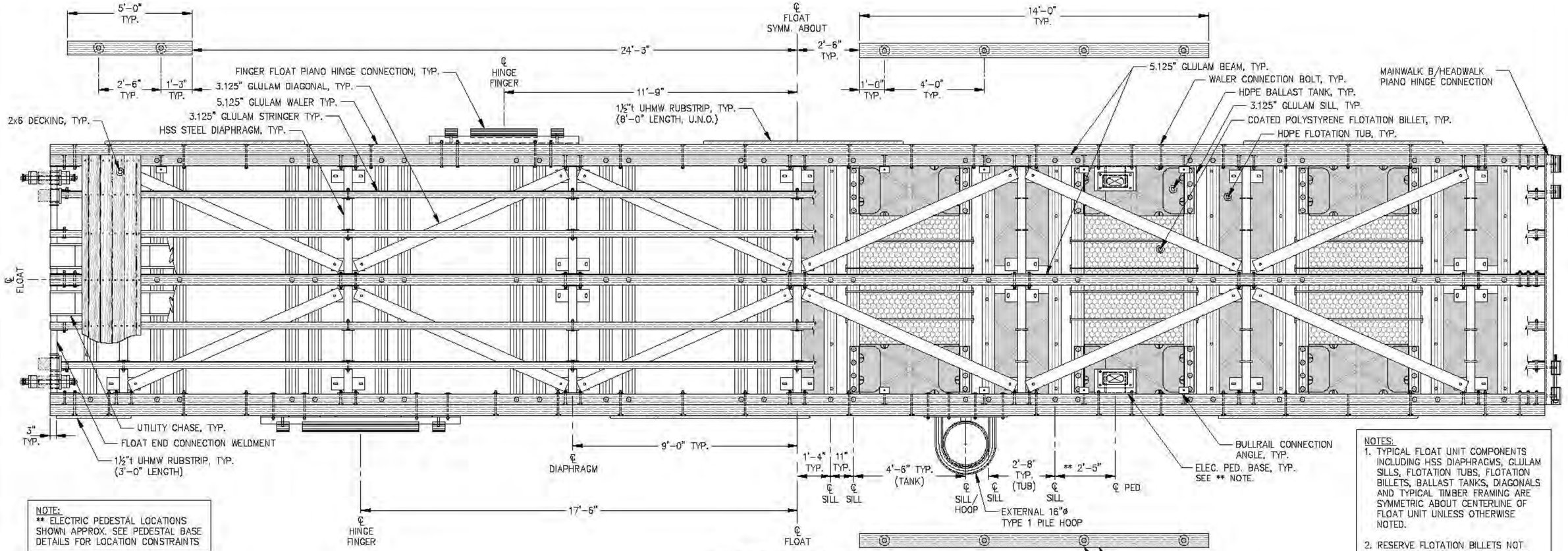

NOTE:
** ELECTRIC PEDESTAL LOCATIONS SHOWN APPROX. SEE PEDESTAL BASE DETAILS FOR LOCATION CONSTRAINTS

NOTES:
1. TYPICAL FLOAT UNIT COMPONENTS INCLUDING HSS DIAPHRAGMS, GLULAM SILLS, FLOTATION TUBS, FLOTATION BILLETS, BALLAST TANKS, DIAGONALS AND TYPICAL TIMBER FRAMING ARE SYMMETRIC ABOUT CENTERLINE OF FLOAT UNIT UNLESS OTHERWISE NOTED.
2. RESERVE FLOTATION BILLETS NOT SHOWN IN PLAN FOR CLARITY, SEE DETAILS.

FLOAT UNIT B-1 - PLAN

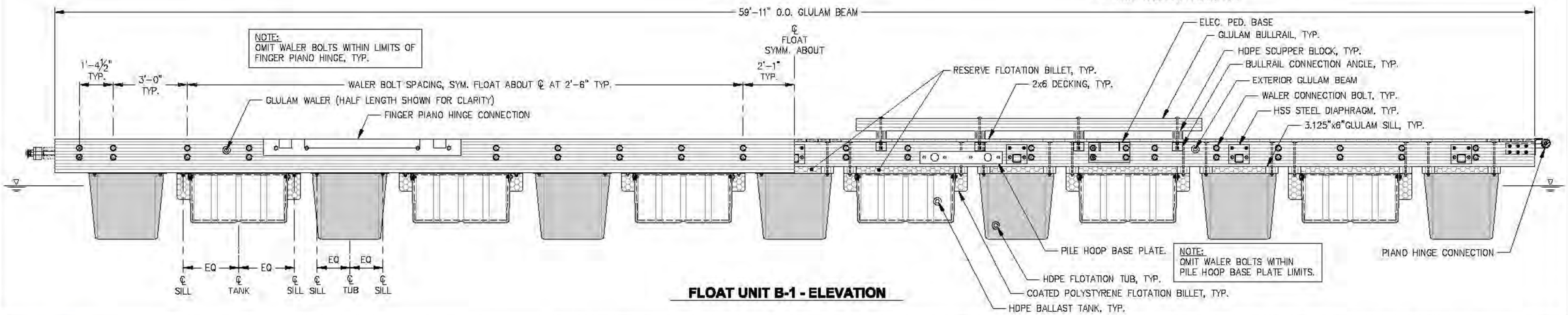

FLOAT UNIT B-1 - ELEVATION

REVISIONS

REV.	DATE	DESCRIPTION	DWN.	CKD.	APP.

P N D ENGINEERS, INC.
9360 Glacier Highway, Ste. 100
Juneau, Alaska 99801
Phone: 907-586-2093
Fax: 907-586-2099
www.pndengineers.com

DESIGN: MS CHECKED: JLD
DRAWN: WRB APPROVED: CRS
SCALE:
DATE: 2/28/14

STATE OF ALASKA — John L. Dahlin — CE-8847 — REGISTERED PROFESSIONAL ENGINEER

CITY & BOROUGH OF JUNEAU, ALASKA
AURORA HARBOR REBUILD - PHASE I
CONTRACT NO. DH 12-160

SHEET TITLE: **MAINWALK B FLOAT UNIT B-1**

PND PROJECT NO.: 122055

6.23
SHEET 70 OF 143

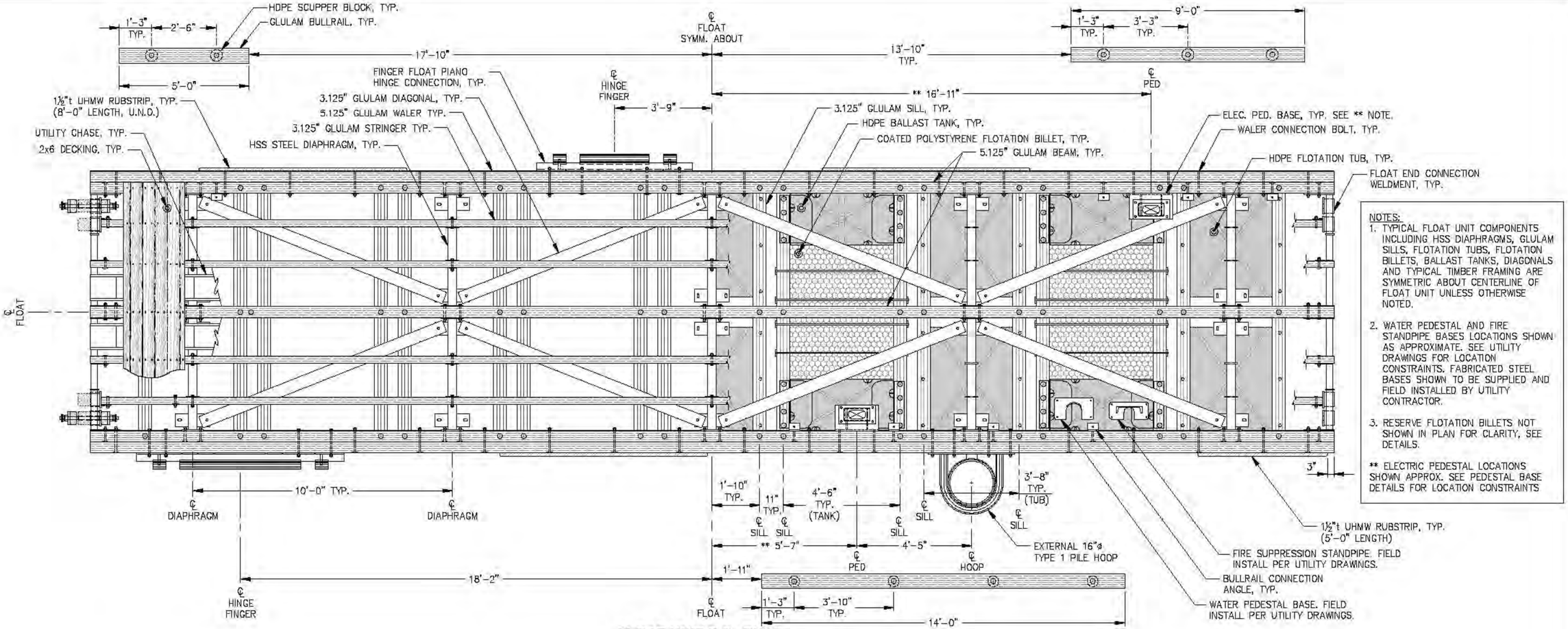

NOTES:
1. TYPICAL FLOAT UNIT COMPONENTS INCLUDING HSS DIAPHRAGMS, GLULAM SILLS, FLOTATION TUBS, FLOTATION BILLETS, BALLAST TANKS, DIAGONALS AND TYPICAL TIMBER FRAMING ARE SYMMETRIC ABOUT CENTERLINE OF FLOAT UNIT UNLESS OTHERWISE NOTED.
2. WATER PEDESTAL AND FIRE STANDPIPE BASES LOCATIONS SHOWN AS APPROXIMATE. SEE UTILITY DRAWINGS FOR LOCATION CONSTRAINTS. FABRICATED STEEL BASES SHOWN TO BE SUPPLIED AND FIELD INSTALLED BY UTILITY CONTRACTOR.
3. RESERVE FLOTATION BILLETS NOT SHOWN IN PLAN FOR CLARITY, SEE DETAILS.

** ELECTRIC PEDESTAL LOCATIONS SHOWN APPROX. SEE PEDESTAL BASE DETAILS FOR LOCATION CONSTRAINTS

FLOAT UNIT B-2 - PLAN

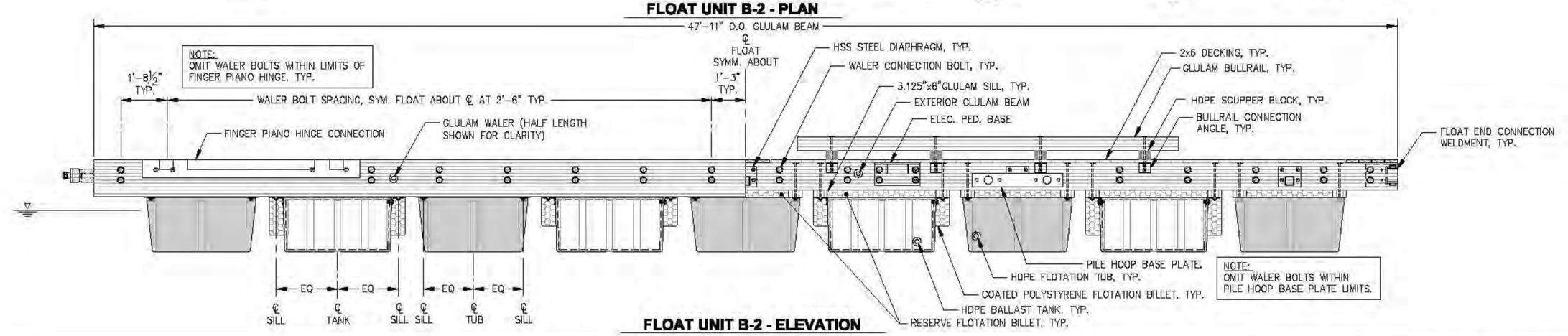

FLOAT UNIT B-2 - ELEVATION

REVISIONS

REV.	DATE	DESCRIPTION	DWN.	CKD.	APP.

P N D ENGINEERS, INC.
9360 Glacier Highway, Ste. 100
Juneau, Alaska 99801
Phone: 907-586-2093
Fax: 907-586-2099
www.pndengineers.com

DESIGN: MS CHECKED: JLD
DRAWN: WRB APPROVED: CRS
SCALE:

STATE OF ALASKA — John L. Dellutri CC-8847 — REGISTERED PROFESSIONAL ENGINEER
DATE: 2/28/14

CITY & BOROUGH OF JUNEAU, ALASKA
AURORA HARBOR REBUILD - PHASE I
CONTRACT NO. DH 12-160

SHEET TITLE:
MAINWALK B FLOAT UNIT B-2

PND PROJECT NO.: 122055

6.24
SHEET 71 OF 143

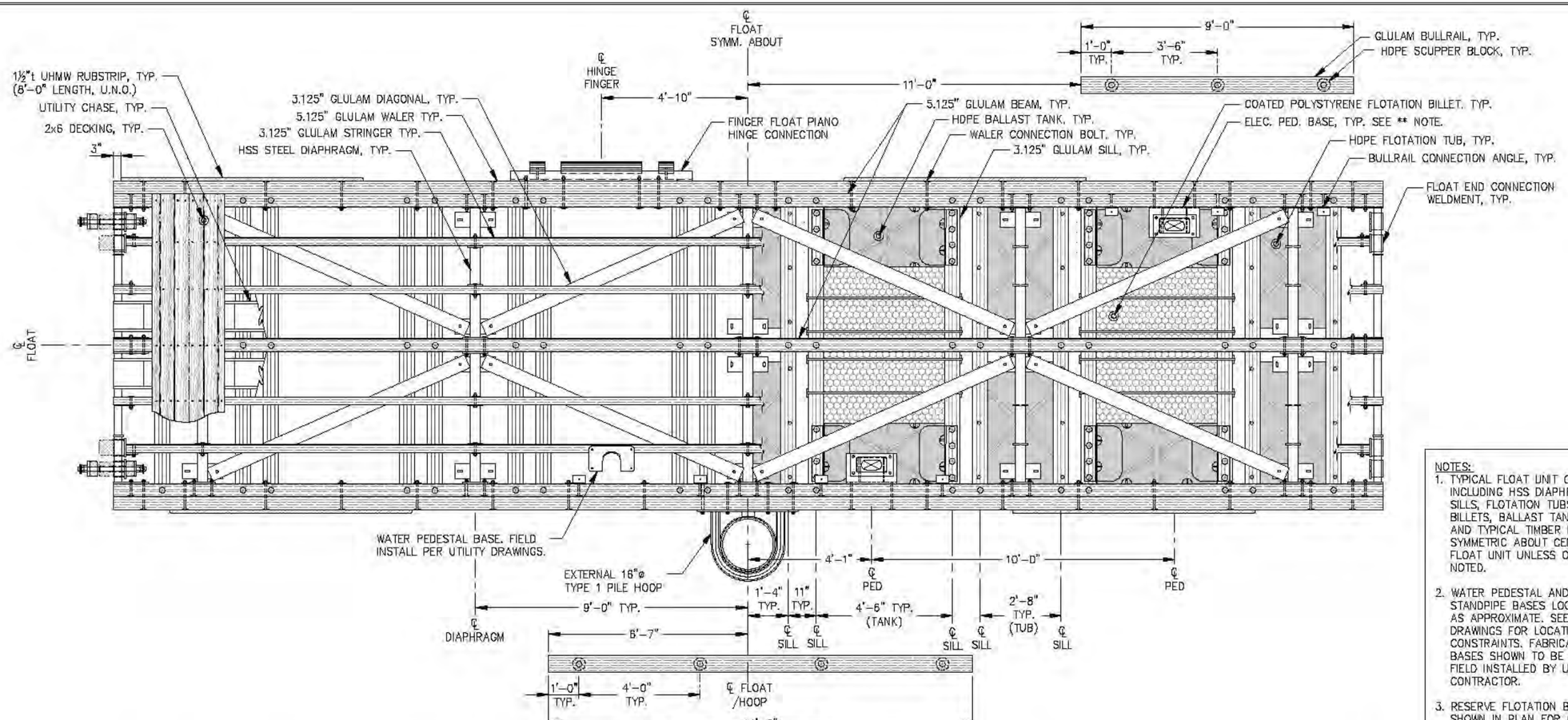

FLOAT UNIT B-3 - PLAN

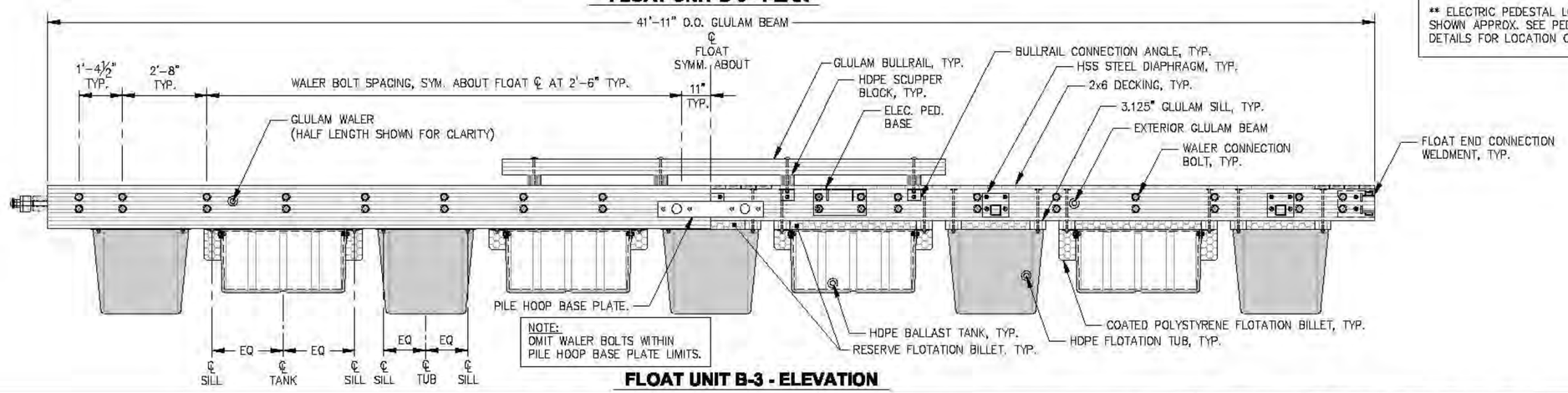

FLOAT UNIT B-3 - ELEVATION

NOTES:
1. TYPICAL FLOAT UNIT COMPONENTS INCLUDING HSS DIAPHRAGMS, GLULAM SILLS, FLOTATION TUBS, FLOTATION BILLETS, BALLAST TANKS, DIAGONALS AND TYPICAL TIMBER FRAMING ARE SYMMETRIC ABOUT CENTERLINE OF FLOAT UNIT UNLESS OTHERWISE NOTED.
2. WATER PEDESTAL AND FIRE STANDPIPE BASES LOCATIONS SHOWN AS APPROXIMATE. SEE UTILITY DRAWINGS FOR LOCATION CONSTRAINTS. FABRICATED STEEL BASES SHOWN TO BE SUPPLIED AND FIELD INSTALLED BY UTILITY CONTRACTOR.
3. RESERVE FLOTATION BILLETS NOT SHOWN IN PLAN FOR CLARITY, SEE DETAILS.

** ELECTRIC PEDESTAL LOCATIONS SHOWN APPROX. SEE PEDESTAL BASE DETAILS FOR LOCATION CONSTRAINTS

REVISIONS

REV.	DATE	DESCRIPTION	DWN.	CKD.	APP.

P N D ENGINEERS, INC.
9360 Glacier Highway, Ste. 100
Juneau, Alaska 99801
Phone: 907-586-2093
Fax: 907-586-2099
www.pndengineers.com

DESIGN: MS CHECKED: JLD
DRAWN: WRB APPROVED: CRS
SCALE:
DATE: 2/28/14

CITY & BOROUGH OF JUNEAU, ALASKA
AURORA HARBOR REBUILD - PHASE I
CONTRACT NO. DH 12-160

SHEET TITLE: MAINWALK B FLOAT UNIT B-3

PND PROJECT NO.: 122055

6.25
SHEET 72 OF 143

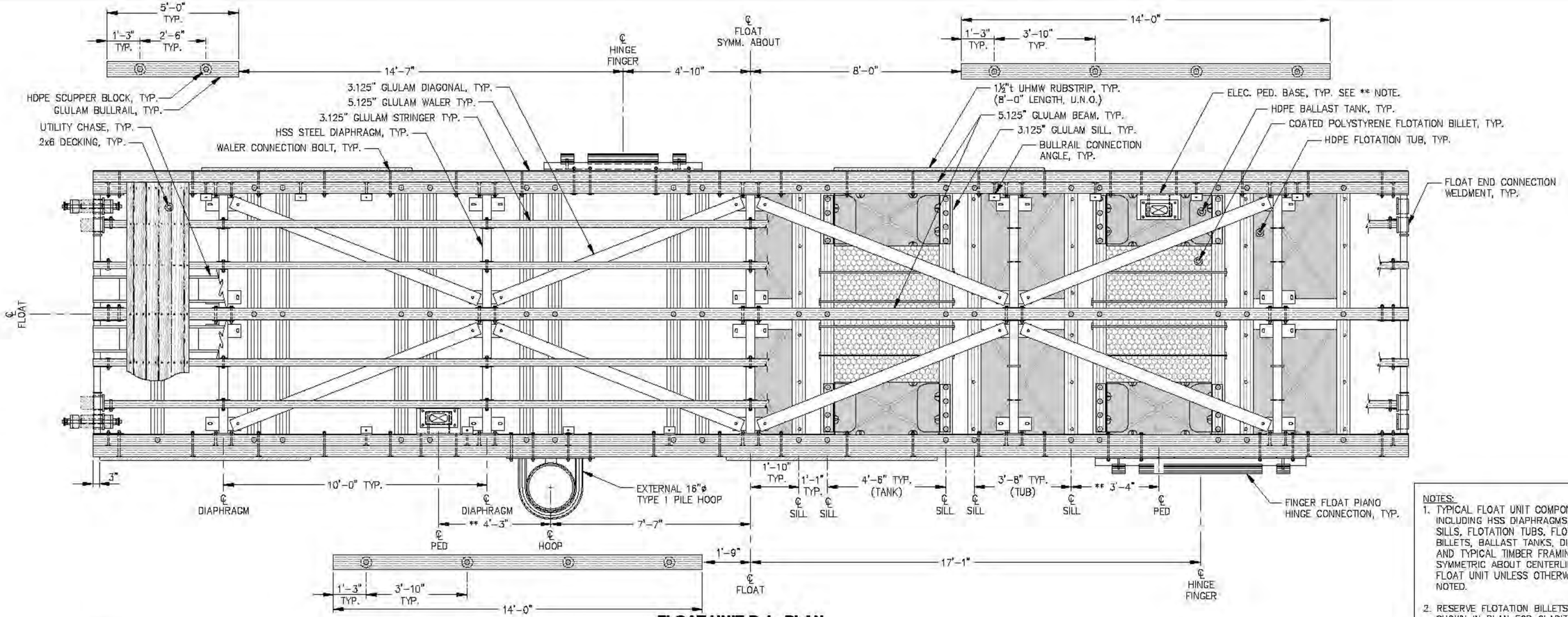

FLOAT UNIT B-4 - PLAN

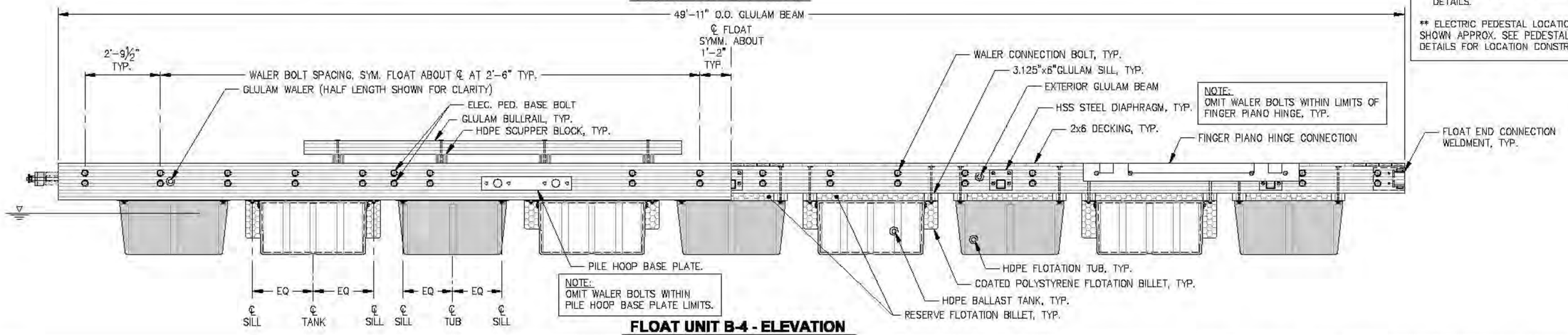

FLOAT UNIT B-4 - ELEVATION

NOTES:
1. TYPICAL FLOAT UNIT COMPONENTS INCLUDING HSS DIAPHRAGMS, GLULAM SILLS, FLOTATION TUBS, FLOTATION BILLETS, BALLAST TANKS, DIAGONALS AND TYPICAL TIMBER FRAMING ARE SYMMETRIC ABOUT CENTERLINE OF FLOAT UNIT UNLESS OTHERWISE NOTED.
2. RESERVE FLOTATION BILLETS NOT SHOWN IN PLAN FOR CLARITY, SEE DETAILS.

** ELECTRIC PEDESTAL LOCATIONS SHOWN APPROX. SEE PEDESTAL BASE DETAILS FOR LOCATION CONSTRAINTS

REVISIONS

REV.	DATE	DESCRIPTION	DWN.	CKD.	APP.

PND ENGINEERS, INC.
9360 Glacier Highway, Ste. 100
Juneau, Alaska 99801
Phone: 907-586-2093
Fax: 907-586-2099
www.pndengineers.com

DESIGN: MS CHECKED: JLD
DRAWN: WRB APPROVED: CRS
SCALE:

STATE OF ALASKA — John L. Dellutri CE-8847 — REGISTERED PROFESSIONAL CIVIL ENGINEER
DATE: 2/28/14

CITY & BOROUGH OF JUNEAU, ALASKA
AURORA HARBOR REBUILD - PHASE I
CONTRACT NO. DH 12-160

SHEET TITLE:
MAINWALK B FLOAT UNIT B-4

PND PROJECT NO.: 122055

6.26
SHEET 73 OF 143

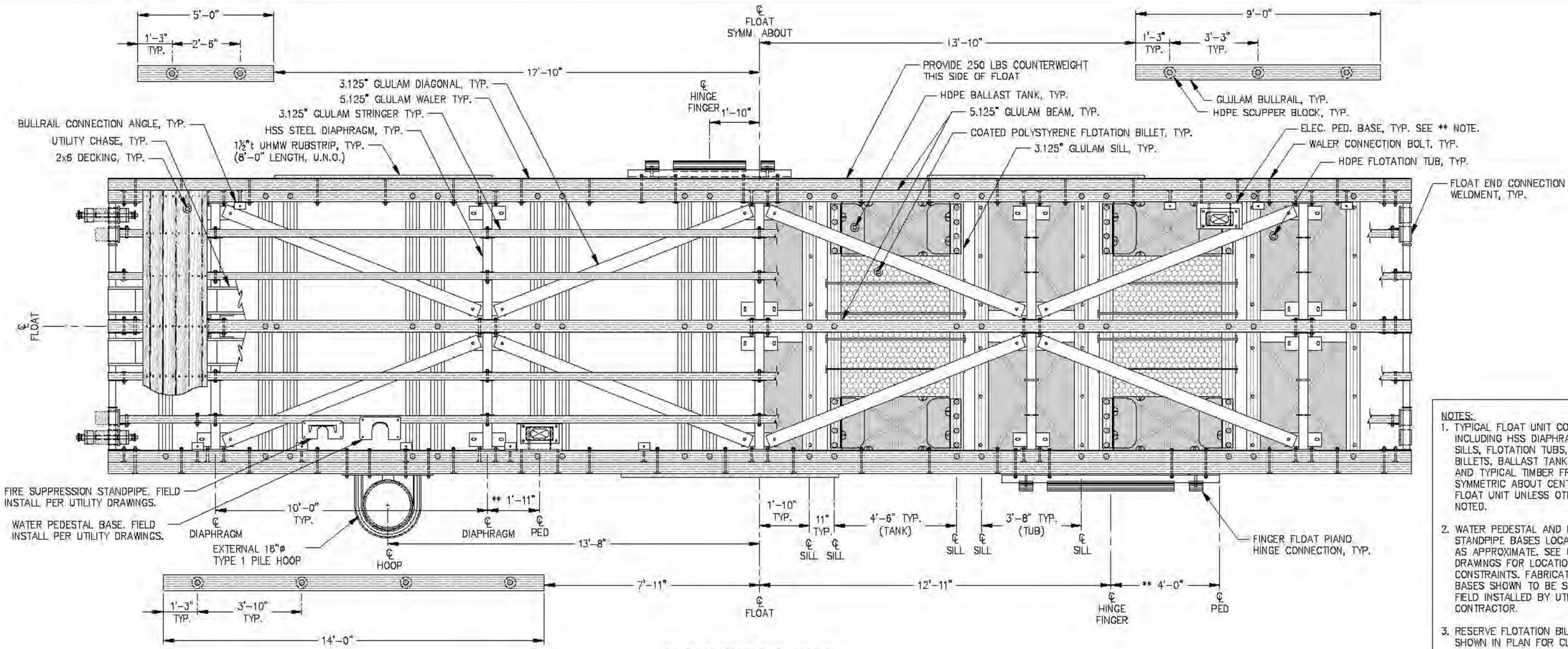

FLOAT UNIT B-5 - PLAN

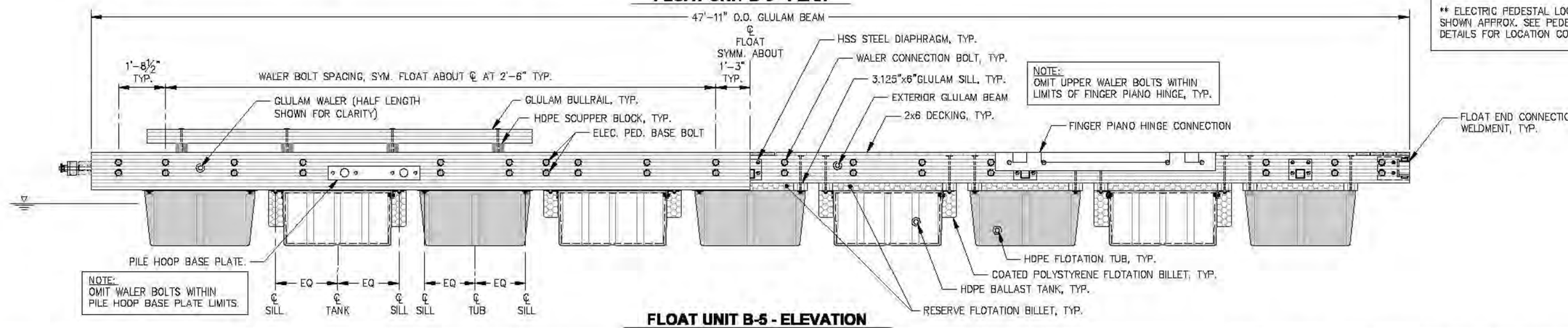

FLOAT UNIT B-5 - ELEVATION

NOTES:
1. TYPICAL FLOAT UNIT COMPONENTS INCLUDING HSS DIAPHRAGMS, GLULAM SILLS, FLOTATION TUBS, FLOTATION BILLETS, BALLAST TANKS, DIAGONALS AND TYPICAL TIMBER FRAMING ARE SYMMETRIC ABOUT CENTERLINE OF FLOAT UNIT UNLESS OTHERWISE NOTED.
2. WATER PEDESTAL AND FIRE STANDPIPE BASES LOCATIONS SHOWN AS APPROXIMATE. SEE UTILITY DRAWINGS FOR LOCATION CONSTRAINTS. FABRICATED STEEL BASES SHOWN TO BE SUPPLIED AND FIELD INSTALLED BY UTILITY CONTRACTOR.
3. RESERVE FLOTATION BILLETS NOT SHOWN IN PLAN FOR CLARITY. SEE DETAILS.

** ELECTRIC PEDESTAL LOCATIONS SHOWN APPROX. SEE PEDESTAL BASE DETAILS FOR LOCATION CONSTRAINTS

REVISIONS

REV.	DATE	DESCRIPTION	DWN.	CKD.	APP.

PND ENGINEERS, INC.
9360 Glacier Highway, Ste. 100
Juneau, Alaska 99801
Phone: 907-586-2093
Fax: 907-586-2099
www.pndengineers.com

DESIGN: MS CHECKED: JLD
DRAWN: WRB APPROVED: CRS
SCALE:
DATE: 2/28/14

STATE OF ALASKA — John L. Dekuyper CC-8847 — REGISTERED PROFESSIONAL ENGINEER

CITY & BOROUGH OF JUNEAU, ALASKA
AURORA HARBOR REBUILD - PHASE I
CONTRACT NO. DH 12-160

SHEET TITLE: MAINWALK B FLOAT UNIT B-5

PND PROJECT NO: 122055

6.27
SHEET 74 OF 143

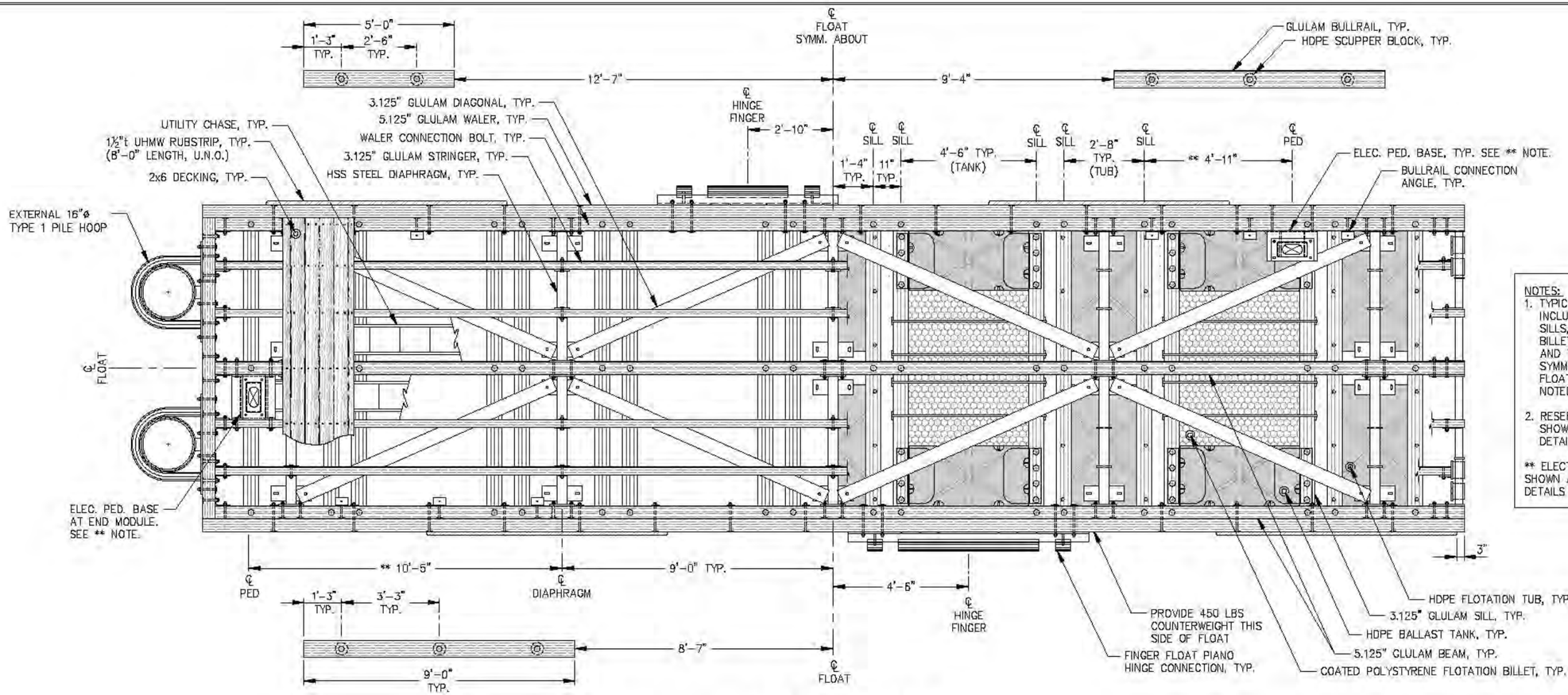

NOTES:
1. TYPICAL FLOAT UNIT COMPONENTS INCLUDING HSS DIAPHRAGMS, GLULAM SILLS, FLOTATION TUBS, FLOTATION BILLETS, BALLAST TANKS, DIAGONALS AND TYPICAL TIMBER FRAMING ARE SYMMETRIC ABOUT CENTERLINE OF FLOAT UNIT UNLESS OTHERWISE NOTED.
2. RESERVE FLOTATION BILLETS NOT SHOWN IN PLAN FOR CLARITY, SEE DETAILS.

** ELECTRIC PEDESTAL LOCATIONS SHOWN APPROX. SEE PEDESTAL BASE DETAILS FOR LOCATION CONSTRAINTS

FLOAT UNIT B-6 - PLAN

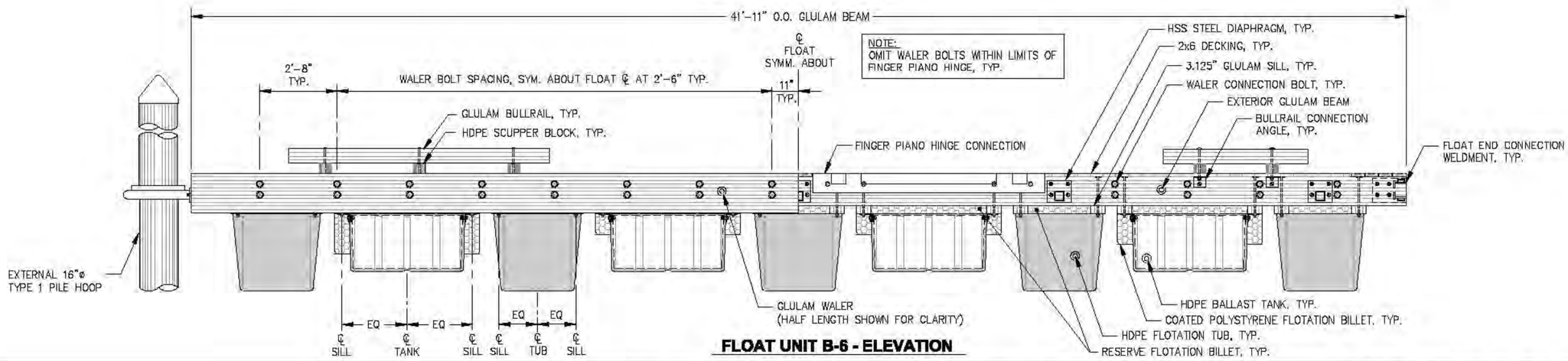

FLOAT UNIT B-6 - ELEVATION

REVISIONS

REV.	DATE	DESCRIPTION	DWN.	CKD.	APP.

P N D ENGINEERS, INC.
9360 Glacier Highway, Ste. 100
Juneau, Alaska 99801
Phone: 907-586-2093
Fax: 907-586-2099
www.pndengineers.com

DESIGN: MS CHECKED: JLD
DRAWN: WRB APPROVED: CRS
SCALE:

STATE OF ALASKA — John L. Dellath — CE-8847 — REGISTERED PROFESSIONAL CIVIL ENGINEER
DATE: 2/28/14

CITY & BOROUGH OF JUNEAU, ALASKA
AURORA HARBOR REBUILD - PHASE I
CONTRACT NO. DH 12-160

SHEET TITLE:
MAINWALK B FLOAT UNIT B-6

PND PROJECT NO.: 122055

SHEET 75 OF 143

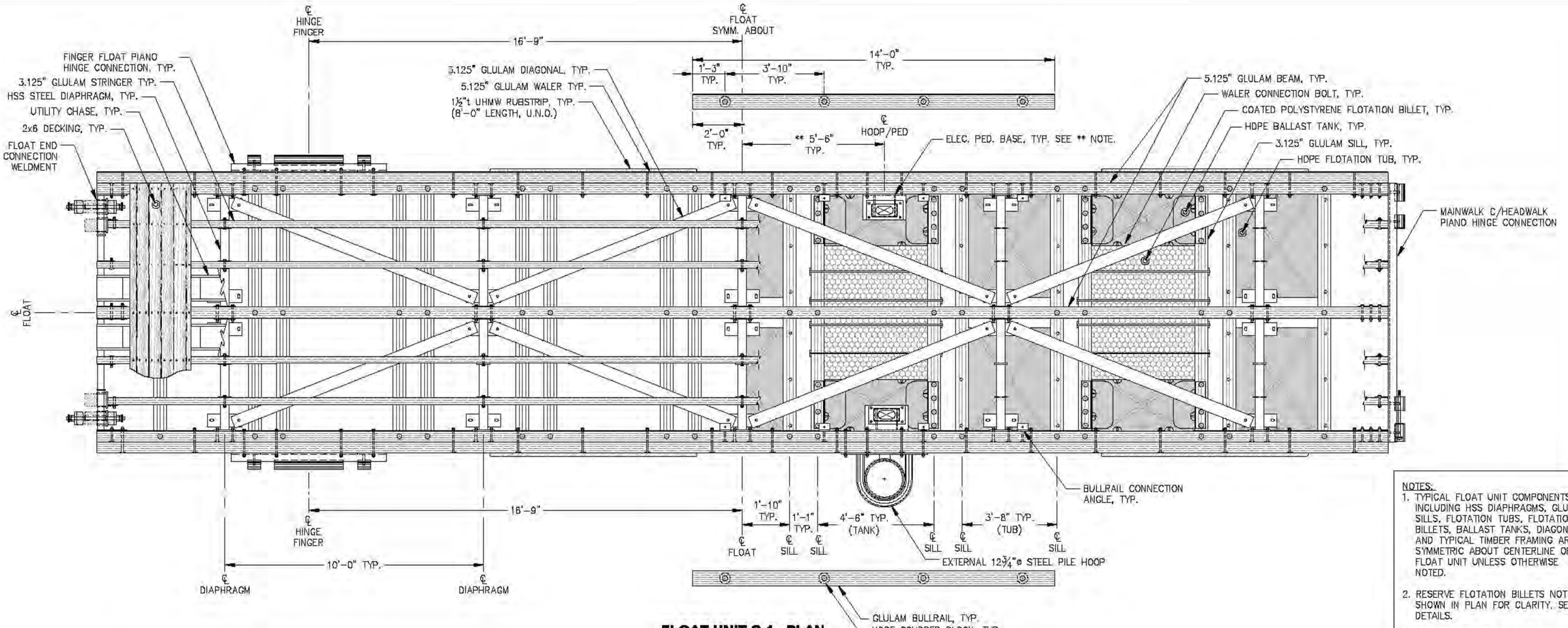

FLOAT UNIT C-1 - PLAN

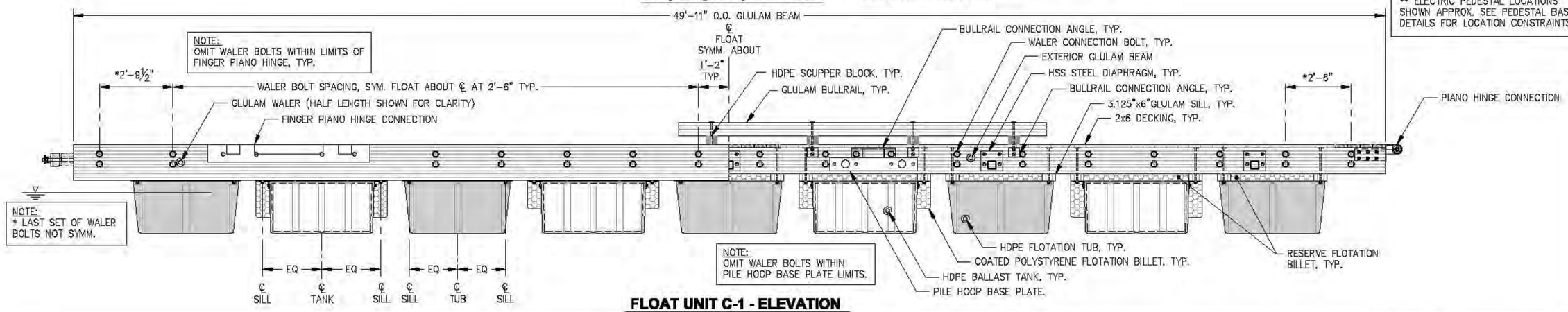

FLOAT UNIT C-1 - ELEVATION

NOTES:
1. TYPICAL FLOAT UNIT COMPONENTS INCLUDING HSS DIAPHRAGMS, GLULAM SILLS, FLOTATION TUBS, FLOTATION BILLETS, BALLAST TANKS, DIAGONALS AND TYPICAL TIMBER FRAMING ARE SYMMETRIC ABOUT CENTERLINE OF FLOAT UNIT UNLESS OTHERWISE NOTED.
2. RESERVE FLOTATION BILLETS NOT SHOWN IN PLAN FOR CLARITY. SEE DETAILS.

** ELECTRIC PEDESTAL LOCATIONS SHOWN APPROX. SEE PEDESTAL BASE DETAILS FOR LOCATION CONSTRAINTS

REVISIONS

REV.	DATE	DESCRIPTION	DWN.	CKD.	APP.

P N D ENGINEERS, INC.
9360 Glacier Highway, Ste. 100
Juneau, Alaska 99801
Phone: 907-586-2093
Fax: 907-586-2099
www.pndengineers.com

DESIGN: MS CHECKED: JLD
DRAWN: WRB APPROVED: CRS
SCALE:
DATE: 2/28/14

CITY & BOROUGH OF JUNEAU, ALASKA
AURORA HARBOR REBUILD - PHASE I
CONTRACT NO. DH 12-160

SHEET TITLE: MAINWALK C FLOAT UNIT C-1

PND PROJECT NO: 122055

6.29
SHEET 78 OF 143

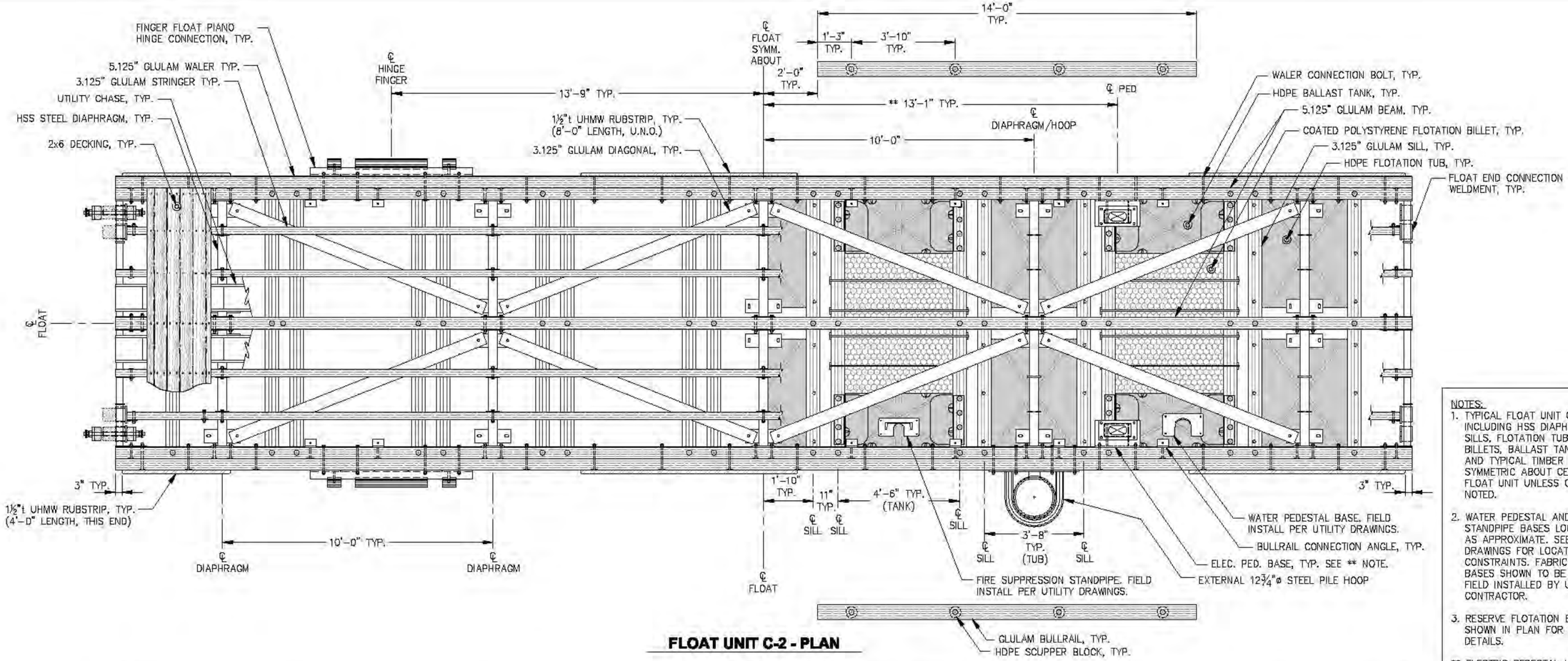

FLOAT UNIT C-2 - PLAN

NOTES:
1. TYPICAL FLOAT UNIT COMPONENTS INCLUDING HSS DIAPHRAGMS, GLULAM SILLS, FLOTATION TUBS, FLOTATION BILLETS, BALLAST TANKS, DIAGONALS AND TYPICAL TIMBER FRAMING ARE SYMMETRIC ABOUT CENTERLINE OF FLOAT UNIT UNLESS OTHERWISE NOTED.
2. WATER PEDESTAL AND FIRE STANDPIPE BASES LOCATIONS SHOWN AS APPROXIMATE. SEE UTILITY DRAWINGS FOR LOCATION CONSTRAINTS. FABRICATED STEEL BASES SHOWN TO BE SUPPLIED AND FIELD INSTALLED BY UTILITY CONTRACTOR.
3. RESERVE FLOTATION BILLETS NOT SHOWN IN PLAN FOR CLARITY, SEE DETAILS.

** ELECTRIC PEDESTAL LOCATIONS SHOWN APPROX. SEE PEDESTAL BASE DETAILS FOR LOCATION CONSTRAINTS

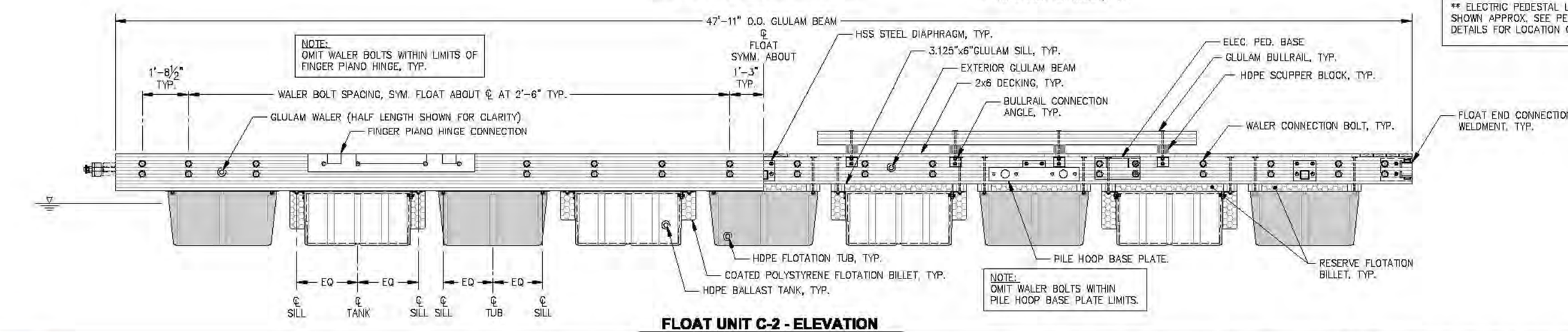

FLOAT UNIT C-2 - ELEVATION

REVISIONS

REV.	DATE	DESCRIPTION	DWN.	CKD.	APP.

P N D ENGINEERS, INC.
9360 Glacier Highway, Ste. 100
Juneau, Alaska 99801
Phone: 907-586-2093
Fax: 907-586-2099
www.pndengineers.com

DESIGN: MS CHECKED: JLD
DRAWN: WRB APPROVED: CRS
SCALE:

STATE OF ALASKA — REGISTERED PROFESSIONAL ENGINEER — John L. Dellath CE-8847
DATE: 2/28/14

CITY & BOROUGH OF JUNEAU, ALASKA
AURORA HARBOR REBUILD - PHASE I
CONTRACT NO. DH 12-160

SHEET TITLE: **MAINWALK C FLOAT UNIT C-2**

PND PROJECT NO.: 122055

6.30
SHEET 77 OF 143

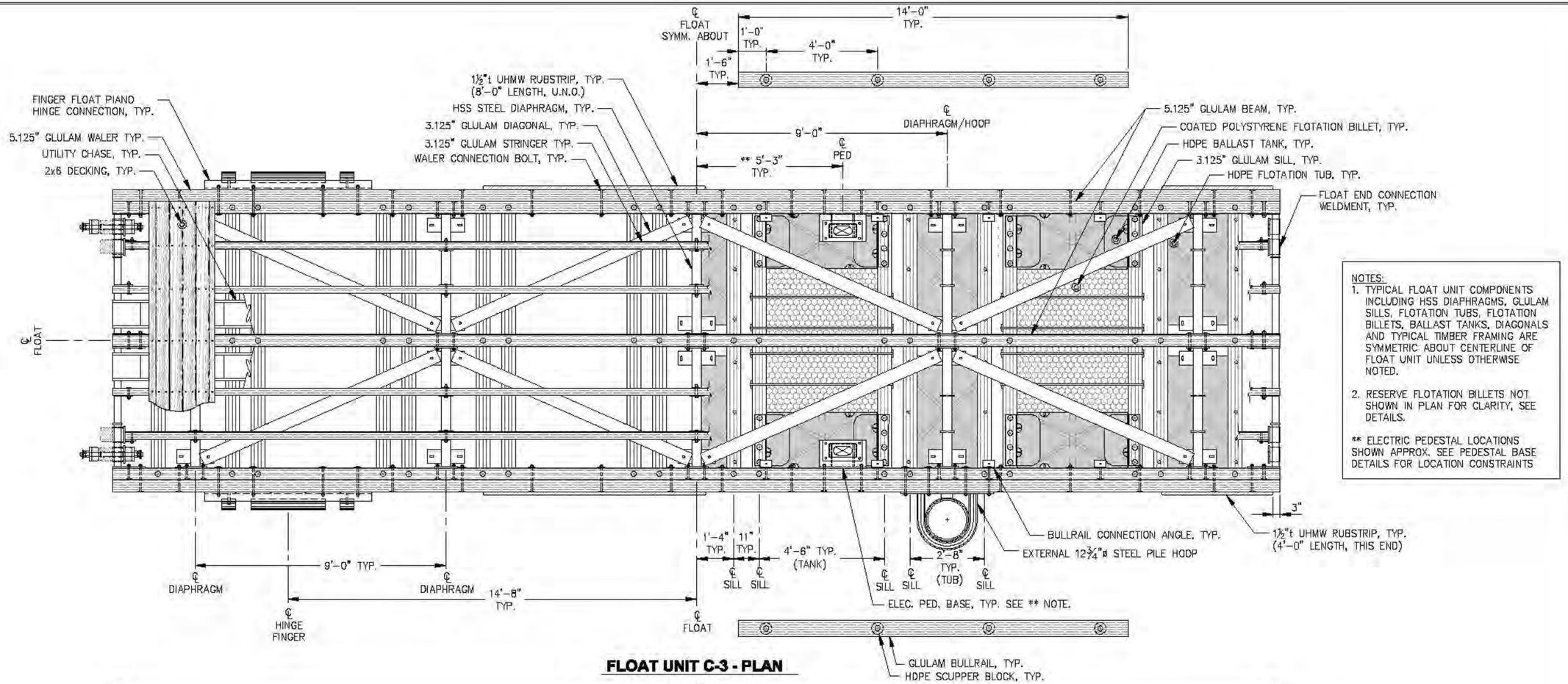

NOTES:
1. TYPICAL FLOAT UNIT COMPONENTS INCLUDING HSS DIAPHRAGMS, GLULAM SILLS, FLOTATION TUBS, FLOTATION BILLETS, BALLAST TANKS, DIAGONALS AND TYPICAL TIMBER FRAMING ARE SYMMETRIC ABOUT CENTERLINE OF FLOAT UNIT UNLESS OTHERWISE NOTED.
2. RESERVE FLOTATION BILLETS NOT SHOWN IN PLAN FOR CLARITY, SEE DETAILS.

** ELECTRIC PEDESTAL LOCATIONS SHOWN APPROX. SEE PEDESTAL BASE DETAILS FOR LOCATION CONSTRAINTS

FLOAT UNIT C-3 - PLAN

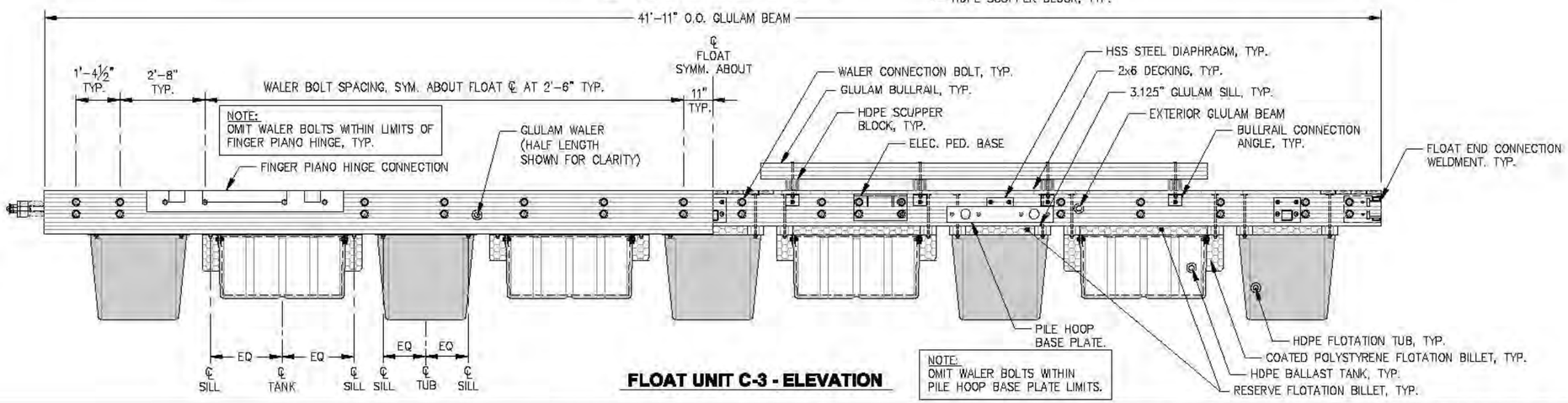

NOTE:
OMIT WALER BOLTS WITHIN PILE HOOP BASE PLATE LIMITS.

FLOAT UNIT C-3 - ELEVATION

REVISIONS

REV.	DATE	DESCRIPTION	DWN.	CKD.	APP.

PND ENGINEERS, INC.
9360 Glacier Highway, Ste. 100
Juneau, Alaska 99801
Phone: 907-586-2093
Fax: 907-586-2099
www.pndengineers.com

DESIGN: MS CHECKED: JLD
DRAWN: WRB APPROVED: CRS
SCALE:
DATE: 2/28/14

STATE OF ALASKA — 14911 — John L. Dekuh CC-8847 — REGISTERED PROFESSIONAL ENGINEER

CITY & BOROUGH OF JUNEAU, ALASKA
AURORA HARBOR REBUILD - PHASE I
CONTRACT NO. DH 12-160

SHEET TITLE:
MAINWALK C FLOAT UNIT C-3

PND PROJECT NO.: 122055

6.31
SHEET 78 OF 143

NOTES:
1. TYPICAL FLOAT UNIT COMPONENTS INCLUDING HSS DIAPHRAGMS, GLULAM SILLS, FLOTATION TUBS, FLOTATION BILLETS, BALLAST TANKS, DIAGONALS AND TYPICAL TIMBER FRAMING ARE SYMMETRIC ABOUT CENTERLINE OF FLOAT UNIT UNLESS OTHERWISE NOTED.
2. WATER PEDESTAL AND FIRE STANDPIPE BASES LOCATIONS SHOWN AS APPROXIMATE. SEE UTILITY DRAWINGS FOR LOCATION CONSTRAINTS. FABRICATED STEEL BASES SHOWN TO BE SUPPLIED AND FIELD INSTALLED BY UTILITY CONTRACTOR.
3. RESERVE FLOTATION BILLETS NOT SHOWN IN PLAN FOR CLARITY, SEE DETAILS.

NOTE:
** ELECTRIC PEDESTAL LOCATIONS SHOWN APPROX. SEE PEDESTAL BASE DETAILS FOR LOCATION CONSTRAINTS

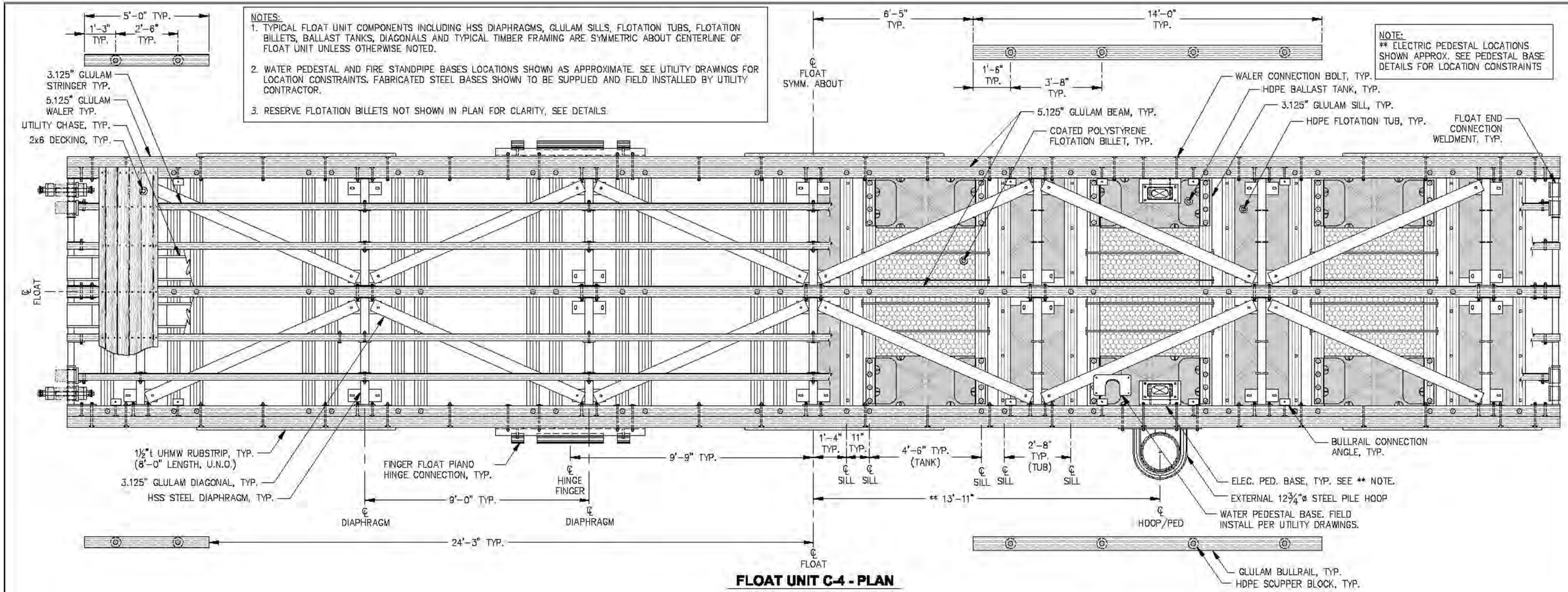

FLOAT UNIT C-4 - PLAN

NOTE:
OMIT WALER BOLTS WITHIN LIMITS OF FINGER PIANO HINGE, TYP.

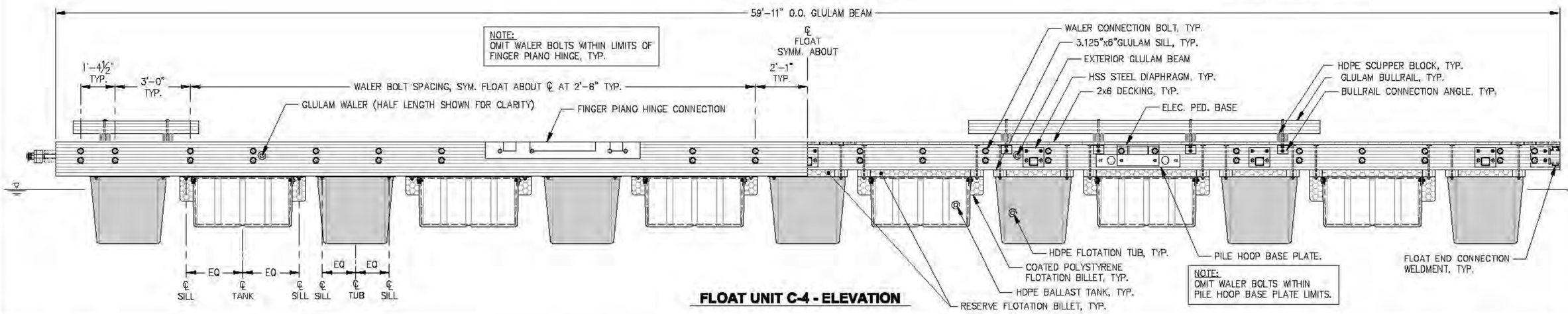

NOTE:
OMIT WALER BOLTS WITHIN PILE HOOP BASE PLATE LIMITS.

FLOAT UNIT C-4 - ELEVATION

REVISIONS

REV.	DATE	DESCRIPTION	DWN.	CKD.	APP.

PND ENGINEERS, INC.
9360 Glacier Highway, Ste. 100
Juneau, Alaska 99801
Phone: 907-586-2093
Fax: 907-586-2099
www.pndengineers.com

DESIGN: MS CHECKED: JLD
DRAWN: WRB APPROVED: CRS
SCALE:
DATE: 2/28/14

CITY & BOROUGH OF JUNEAU, ALASKA
AURORA HARBOR REBUILD - PHASE I
CONTRACT NO. DH 12-160

SHEET TITLE:
MAINWALK C FLOAT UNIT C-4

PND PROJECT NO.: 122055

6.32
SHEET 79 OF 143

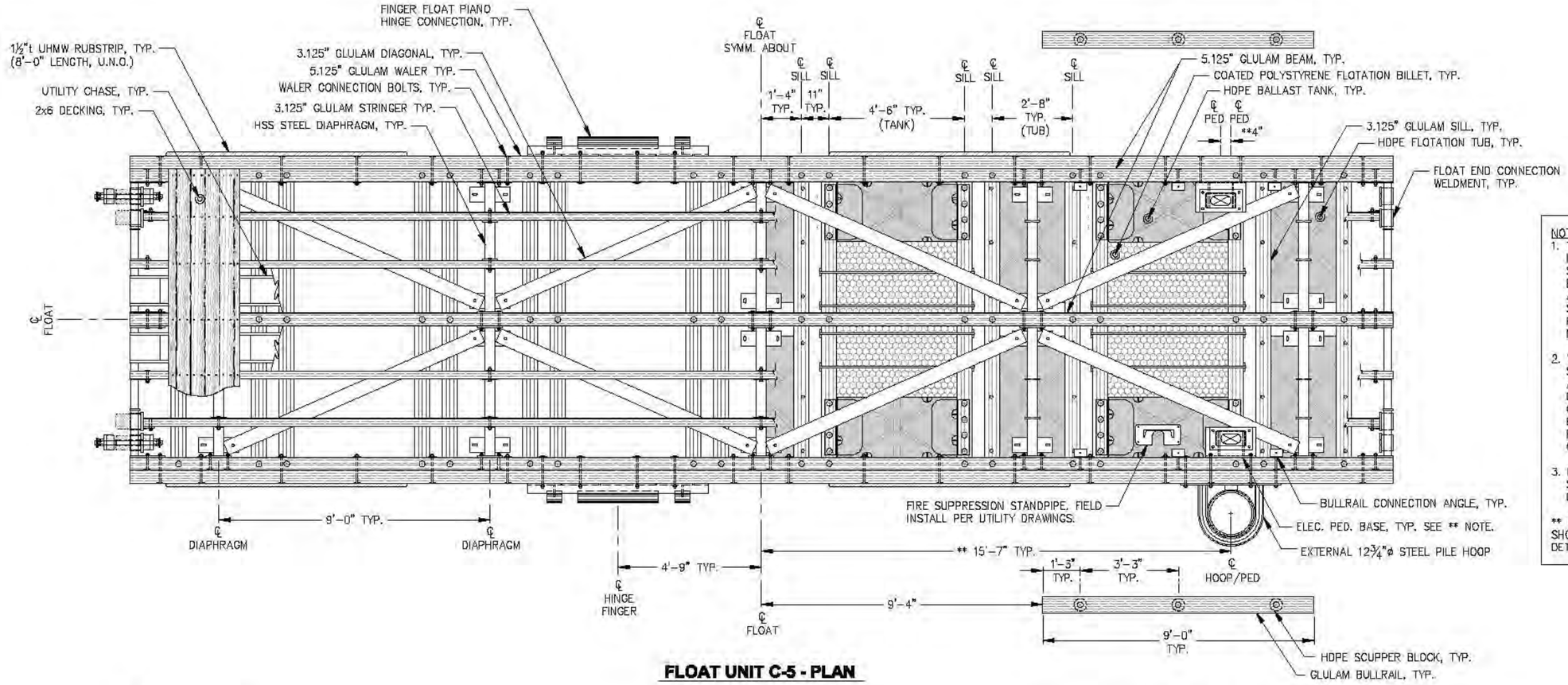

NOTES:
1. TYPICAL FLOAT UNIT COMPONENTS INCLUDING HSS DIAPHRAGMS, GLULAM SILLS, FLOTATION TUBS, FLOTATION BILLETS, BALLAST TANKS, DIAGONALS AND TYPICAL TIMBER FRAMING ARE SYMMETRIC ABOUT CENTERLINE OF FLOAT UNIT UNLESS OTHERWISE NOTED.
2. WATER PEDESTAL AND FIRE STANDPIPE BASES LOCATIONS SHOWN AS APPROXIMATE. SEE UTILITY DRAWINGS FOR LOCATION CONSTRAINTS. FABRICATED STEEL BASES SHOWN TO BE SUPPLIED AND FIELD INSTALLED BY UTILITY CONTRACTOR.
3. RESERVE FLOTATION BILLETS NOT SHOWN IN PLAN FOR CLARITY, SEE DETAILS.

** ELECTRIC PEDESTAL LOCATIONS SHOWN APPROX. SEE PEDESTAL BASE DETAILS FOR LOCATION CONSTRAINTS

FLOAT UNIT C-5 - PLAN

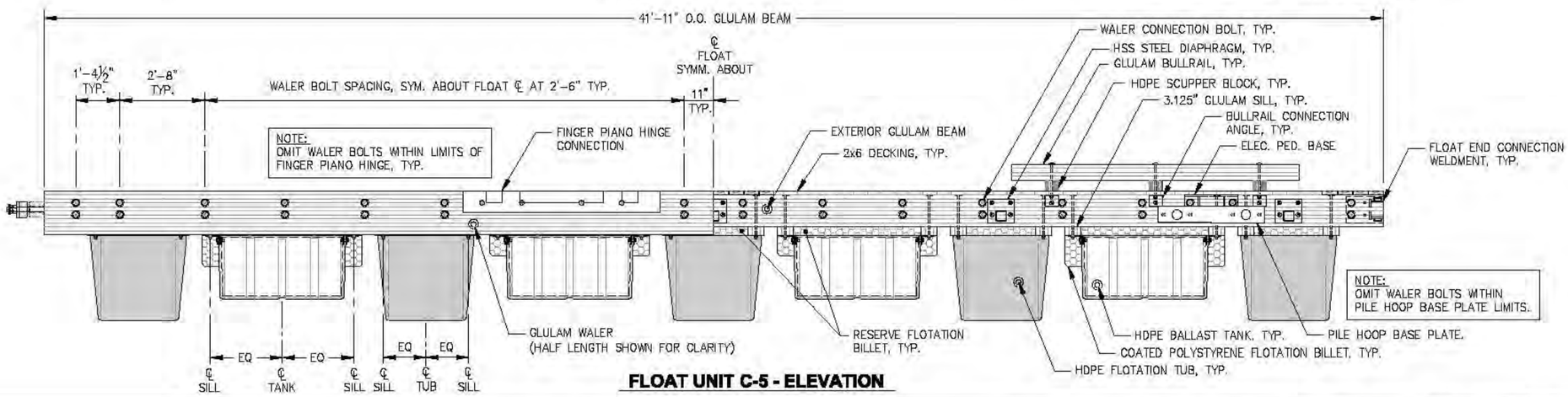

FLOAT UNIT C-5 - ELEVATION

REVISIONS

REV.	DATE	DESCRIPTION	DWN.	CKD.	APP.

PND ENGINEERS, INC.
9360 Glacier Highway, Ste. 100
Juneau, Alaska 99801
Phone: 907-586-2093
Fax: 907-586-2099
www.pndengineers.com

DESIGN: MS CHECKED: JLD
DRAWN: WRB APPROVED: CRS
SCALE:
DATE: 2/28/14

STATE OF ALASKA — 49TH — John L. DeMuth CC-8847 — REGISTERED PROFESSIONAL ENGINEER

CITY & BOROUGH OF JUNEAU, ALASKA
AURORA HARBOR REBUILD - PHASE I
CONTRACT NO. DH 12-160

SHEET TITLE: **MAINWALK C FLOAT UNIT C-5**

PND PROJECT NO: 122055

6.33
SHEET 80 OF 143

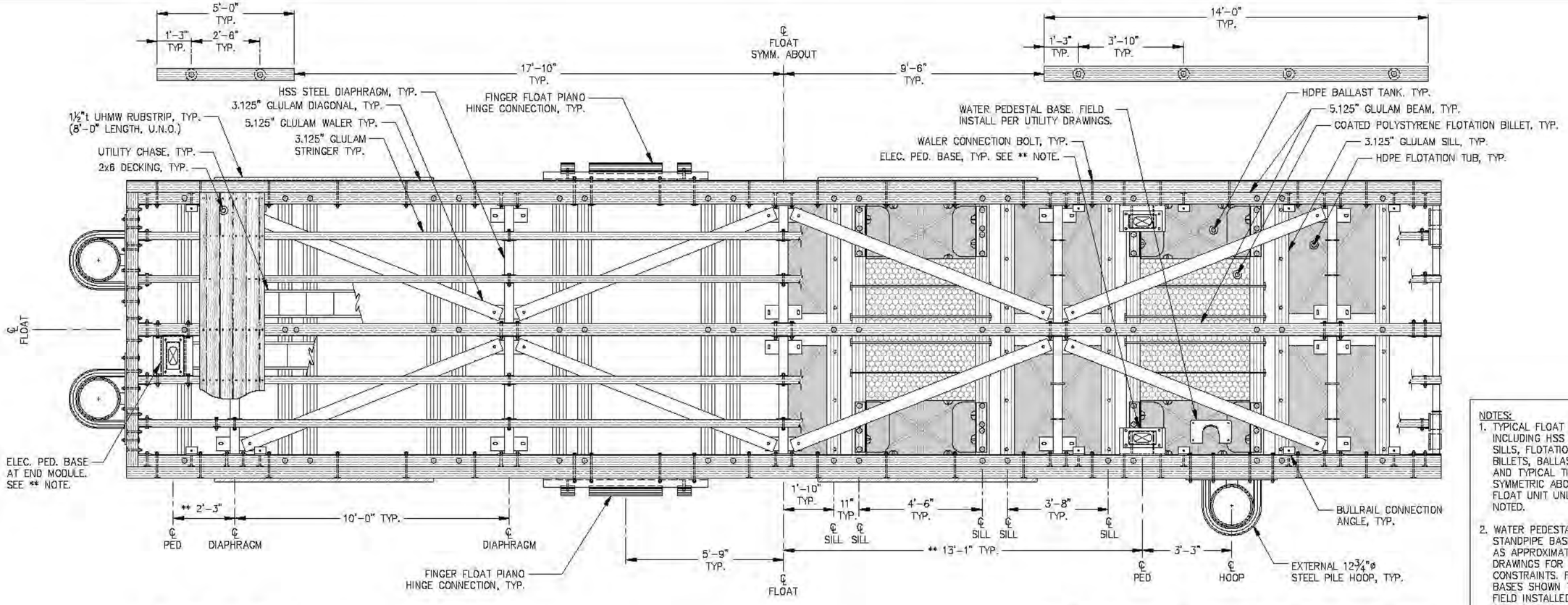

NOTES:
1. TYPICAL FLOAT UNIT COMPONENTS INCLUDING HSS DIAPHRAGMS, GLULAM SILLS, FLOTATION TUBS, FLOTATION BILLETS, BALLAST TANKS, DIAGONALS AND TYPICAL TIMBER FRAMING ARE SYMMETRIC ABOUT CENTERLINE OF FLOAT UNIT UNLESS OTHERWISE NOTED.
2. WATER PEDESTAL AND FIRE STANDPIPE BASES LOCATIONS SHOWN AS APPROXIMATE. SEE UTILITY DRAWINGS FOR LOCATION CONSTRAINTS. FABRICATED STEEL BASES SHOWN TO BE SUPPLIED AND FIELD INSTALLED BY UTILITY CONTRACTOR.
3. RESERVE FLOTATION BILLETS NOT SHOWN IN PLAN FOR CLARITY, SEE DETAILS.

** ELECTRIC PEDESTAL LOCATIONS SHOWN APPROX. SEE PEDESTAL BASE DETAILS FOR LOCATION CONSTRAINTS



FLOAT UNIT C-6 - PLAN

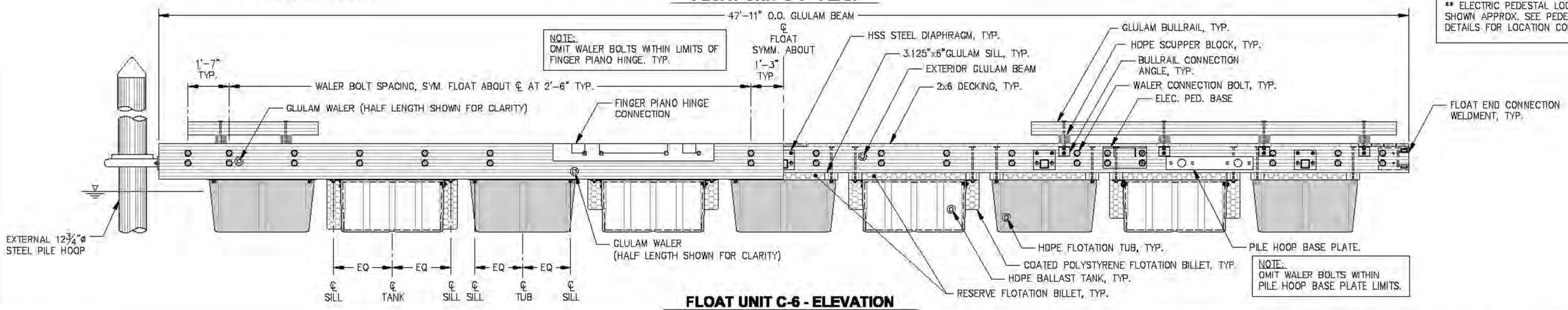

FLOAT UNIT C-6 - ELEVATION

REVISIONS

REV.	DATE	DESCRIPTION	DWN.	CKD.	APP.

P N D ENGINEERS, INC.
9360 Glacier Highway, Ste. 100
Juneau, Alaska 99801
Phone: 907-586-2093
Fax: 907-586-2099
www.pndengineers.com

DESIGN: MS CHECKED: JLD
DRAWN: WRB APPROVED: CRS
SCALE:
DATE: 2/28/14

CITY & BOROUGH OF JUNEAU, ALASKA
AURORA HARBOR REBUILD - PHASE I
CONTRACT NO. DH 12-160

SHEET TITLE: MAINWALK C FLOAT UNIT C-6

PND PROJECT NO.: 122055

6.34
SHEET 81 OF 143

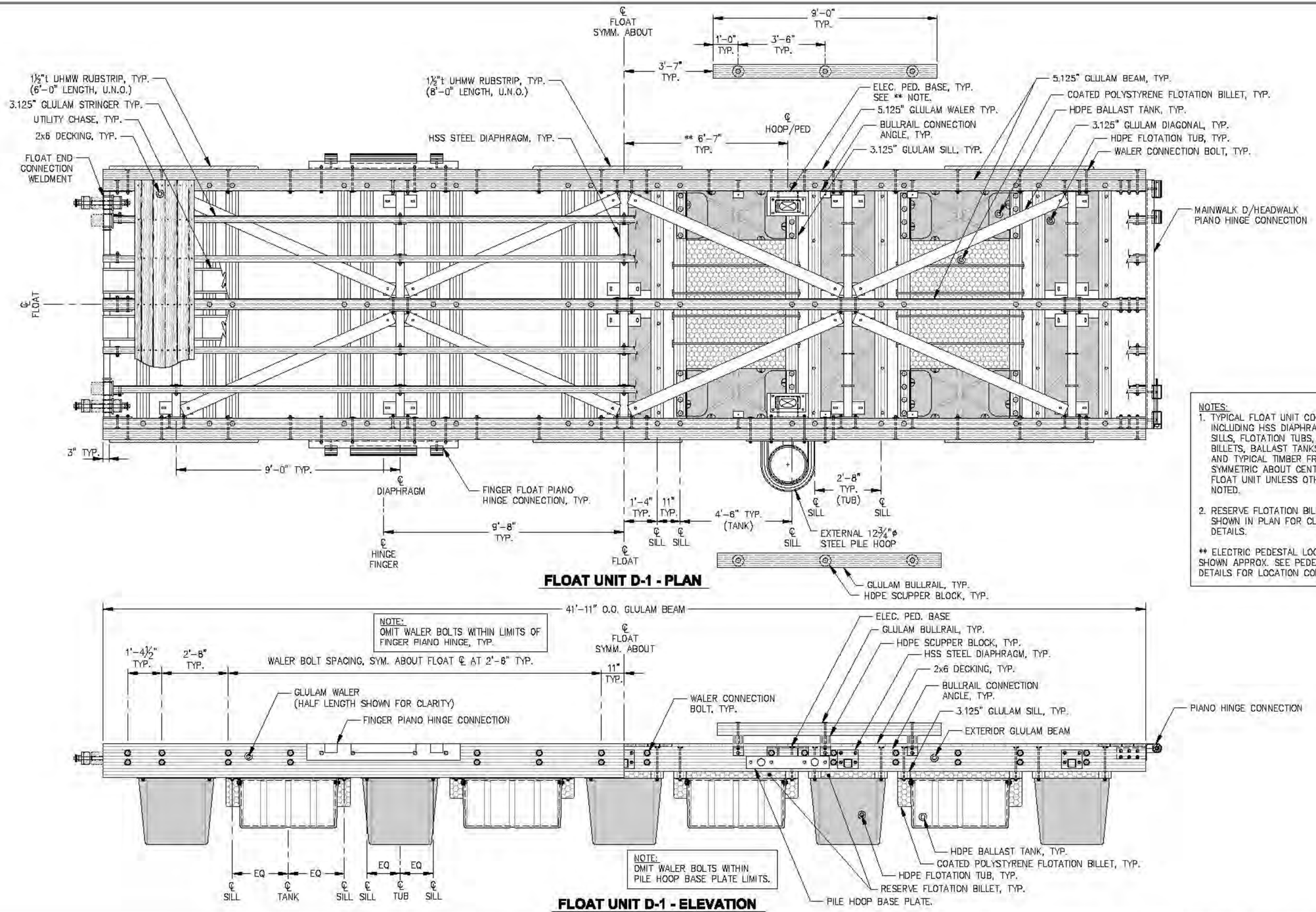

FLOAT UNIT D-1 - PLAN

NOTES:
1. TYPICAL FLOAT UNIT COMPONENTS INCLUDING HSS DIAPHRAGMS, GLULAM SILLS, FLOTATION TUBS, FLOTATION BILLETS, BALLAST TANKS, DIAGONALS AND TYPICAL TIMBER FRAMING ARE SYMMETRIC ABOUT CENTERLINE OF FLOAT UNIT UNLESS OTHERWISE NOTED.
2. RESERVE FLOTATION BILLETS NOT SHOWN IN PLAN FOR CLARITY, SEE DETAILS.

** ELECTRIC PEDESTAL LOCATIONS SHOWN APPROX. SEE PEDESTAL BASE DETAILS FOR LOCATION CONSTRAINTS

FLOAT UNIT D-1 - ELEVATION

REVISIONS

REV.	DATE	DESCRIPTION	DWN.	CKD.	APP.

P N D ENGINEERS, INC.
9360 Glacier Highway, Ste. 100
Juneau, Alaska 99801
Phone: 907-586-2093
Fax: 907-586-2099
www.pndengineers.com

DESIGN: MS CHECKED: JLD
DRAWN: WRB APPROVED: CRS
SCALE:
DATE: 2/28/14

STATE OF ALASKA — 49TH — John L. DeMartin CC-8847 — REGISTERED PROFESSIONAL CIVIL ENGINEER

CITY & BOROUGH OF JUNEAU, ALASKA
AURORA HARBOR REBUILD - PHASE I
CONTRACT NO. DH 12-160

SHEET TITLE:
MAINWALK D FLOAT UNIT D-1

PND PROJECT NO.: 122055

6.35
SHEET 82 OF 143

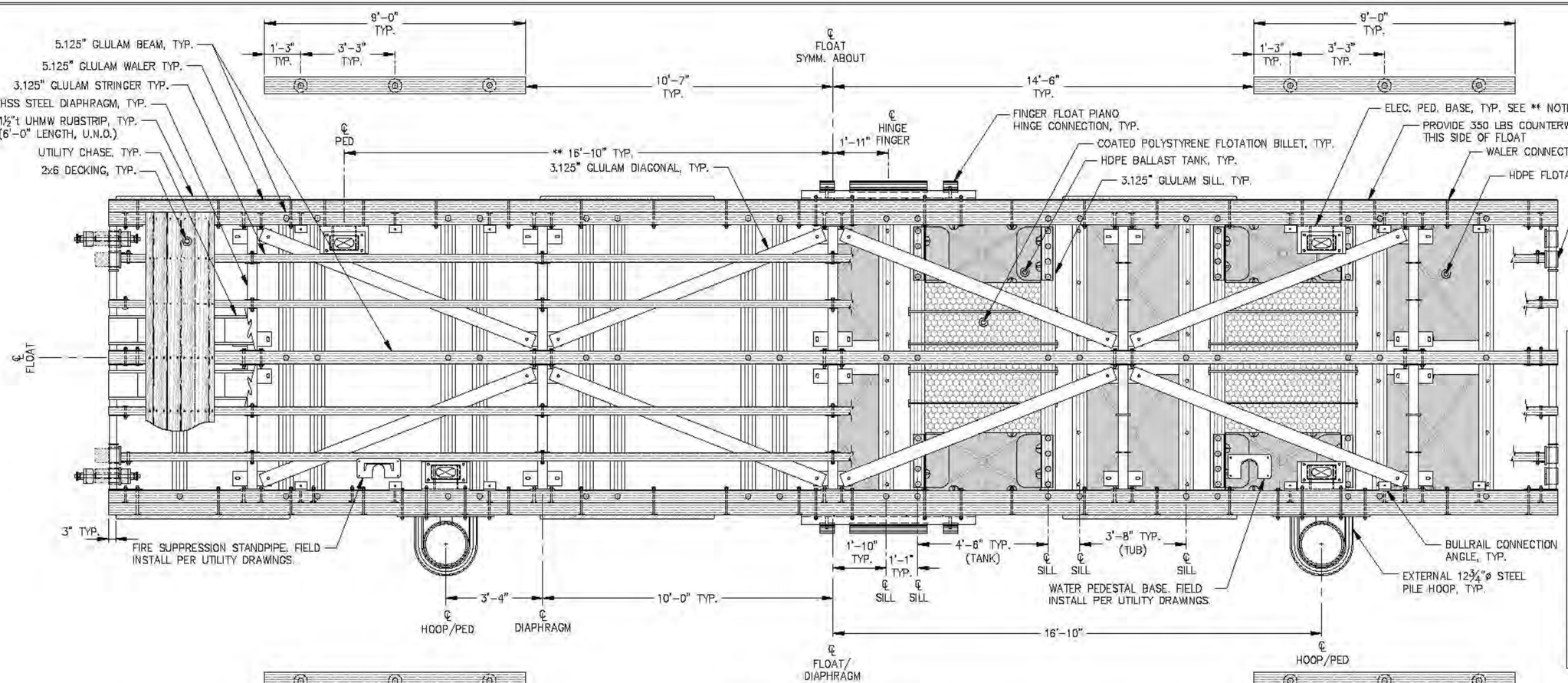

NOTES:

1. TYPICAL FLOAT UNIT COMPONENTS INCLUDING HSS DIAPHRAGMS, GLULAM SILLS, FLOTATION TUBS, FLOTATION BILLETS, BALLAST TANKS, DIAGONALS AND TYPICAL TIMBER FRAMING ARE SYMMETRIC ABOUT CENTERLINE OF FLOAT UNIT UNLESS OTHERWISE NOTED.
2. WATER PEDESTAL AND FIRE STANDPIPE BASES LOCATIONS SHOWN AS APPROXIMATE. SEE UTILITY DRAWINGS FOR LOCATION CONSTRAINTS. FABRICATED STEEL BASES SHOWN TO BE SUPPLIED AND FIELD INSTALLED BY UTILITY CONTRACTOR.
3. RESERVE FLOTATION BILLETS NOT SHOWN IN PLAN FOR CLARITY, SEE DETAILS.

** ELECTRIC PEDESTAL LOCATIONS SHOWN APPROX. SEE PEDESTAL BASE DETAILS FOR LOCATION CONSTRAINTS

FLOAT UNIT D-2 - PLAN

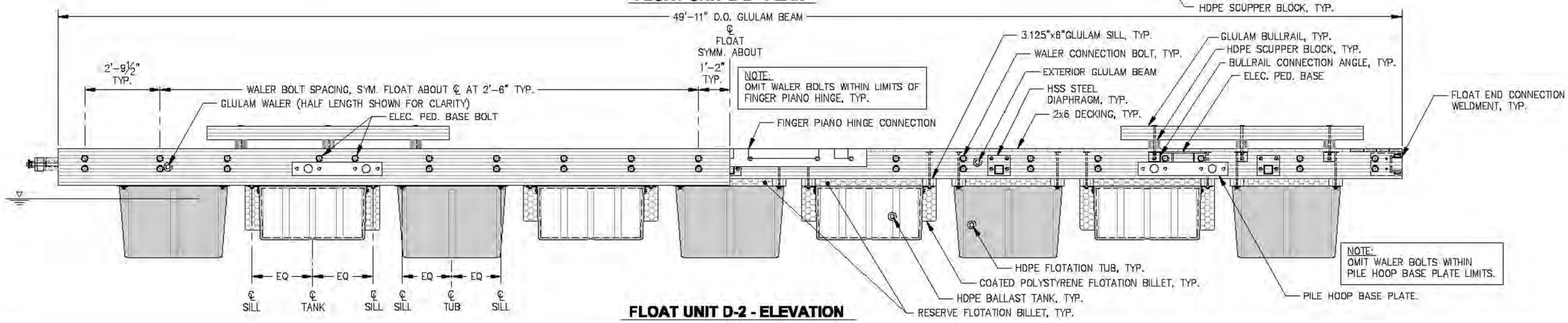

FLOAT UNIT D-2 - ELEVATION

REVISIONS

REV.	DATE	DESCRIPTION	DWN.	CKD.	APP.

PND ENGINEERS, INC.
9360 Glacier Highway, Ste. 100
Juneau, Alaska 99801
Phone: 907-586-2093
Fax: 907-586-2099
www.pndengineers.com

DESIGN: MS CHECKED: JLD
DRAWN: WRB APPROVED: CRS
SCALE:

STATE OF ALASKA — 49TH — John L. DeMuth CC-8847 — REGISTERED PROFESSIONAL ENGINEER
DATE: 2/28/14

CITY & BOROUGH OF JUNEAU, ALASKA
AURORA HARBOR REBUILD - PHASE I
CONTRACT NO. DH 12-160

SHEET TITLE:
MAINWALK D FLOAT UNIT D-2

PND PROJECT NO: 122055

6.36
SHEET 83 OF 143

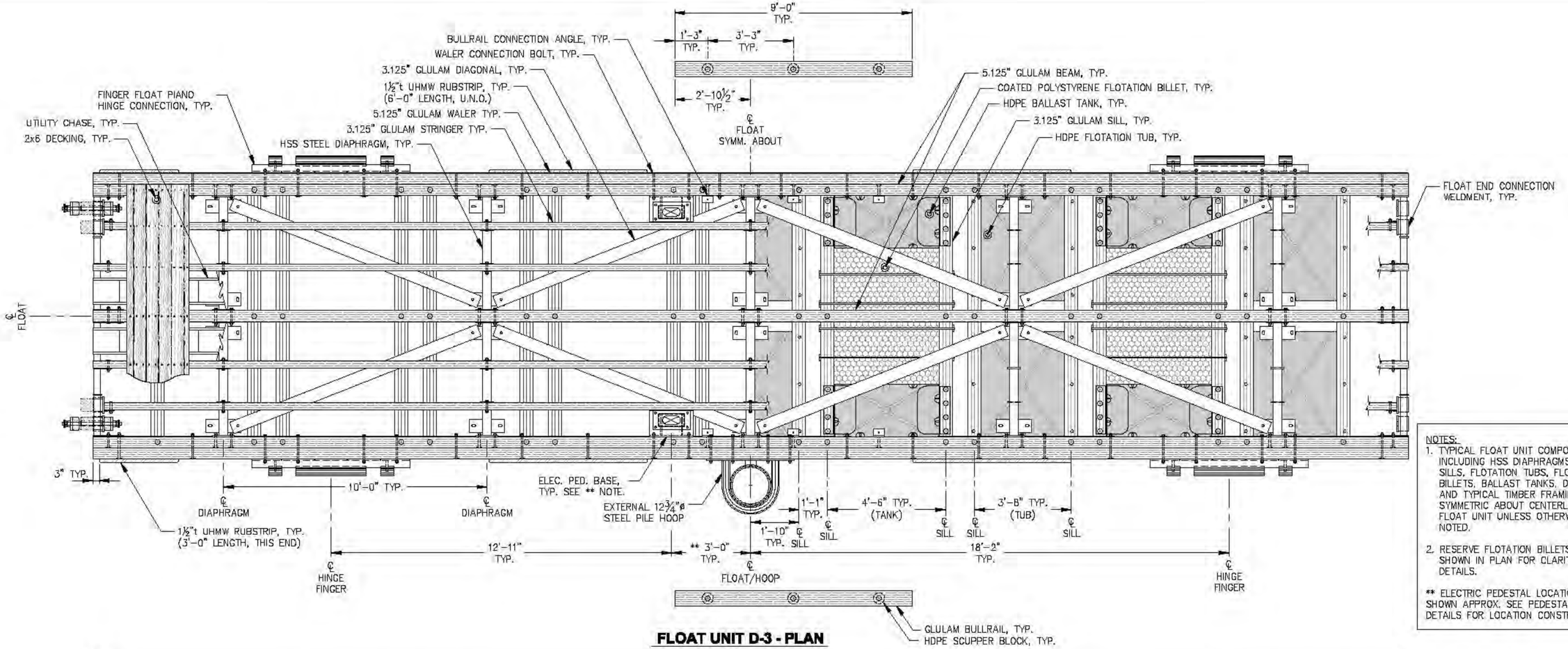

NOTES:
1. TYPICAL FLOAT UNIT COMPONENTS INCLUDING HSS DIAPHRAGMS, GLULAM SILLS, FLOTATION TUBS, FLOTATION BILLETS, BALLAST TANKS, DIAGONALS AND TYPICAL TIMBER FRAMING ARE SYMMETRIC ABOUT CENTERLINE OF FLOAT UNIT UNLESS OTHERWISE NOTED.
2. RESERVE FLOTATION BILLETS NOT SHOWN IN PLAN FOR CLARITY, SEE DETAILS.

** ELECTRIC PEDESTAL LOCATIONS SHOWN APPROX. SEE PEDESTAL BASE DETAILS FOR LOCATION CONSTRAINTS

FLOAT UNIT D-3 - PLAN

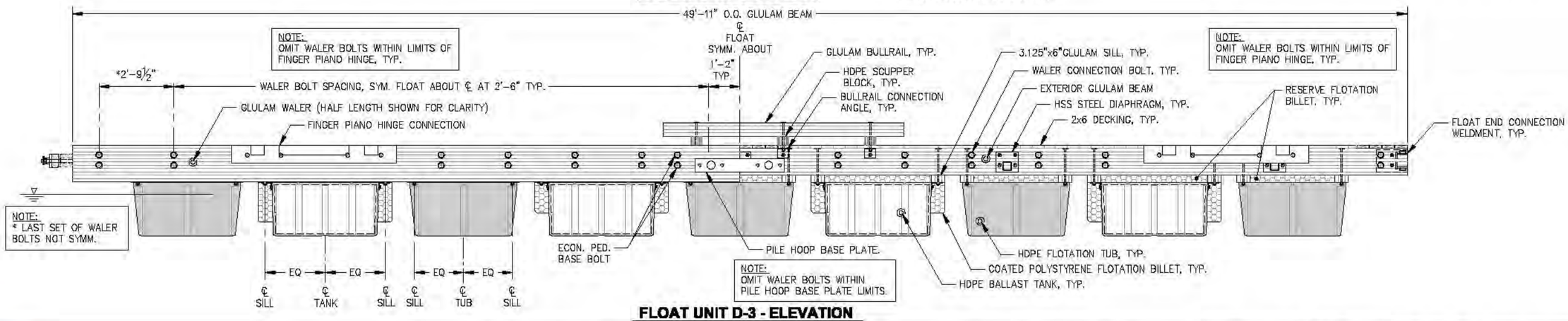

FLOAT UNIT D-3 - ELEVATION

REVISIONS

REV.	DATE	DESCRIPTION	DWN.	CKD.	APP.

PND ENGINEERS, INC.
9360 Glacier Highway, Ste. 100
Juneau, Alaska 99801
Phone: 907-586-2093
Fax: 907-586-2099
www.pndengineers.com

DESIGN: MS CHECKED: JLD
DRAWN: WRB APPROVED: CRS
SCALE:

STATE OF ALASKA — JOHN L. DeHAVEN — CC-8847 — REGISTERED PROFESSIONAL ENGINEER
DATE: 2/28/14

CITY & BOROUGH OF JUNEAU, ALASKA
AURORA HARBOR REBUILD - PHASE I
CONTRACT NO. DH 12-160

SHEET TITLE:
MAINWALK D FLOAT UNIT D-3

PND PROJECT NO.: 122055

6.37
SHEET 84 OF 143

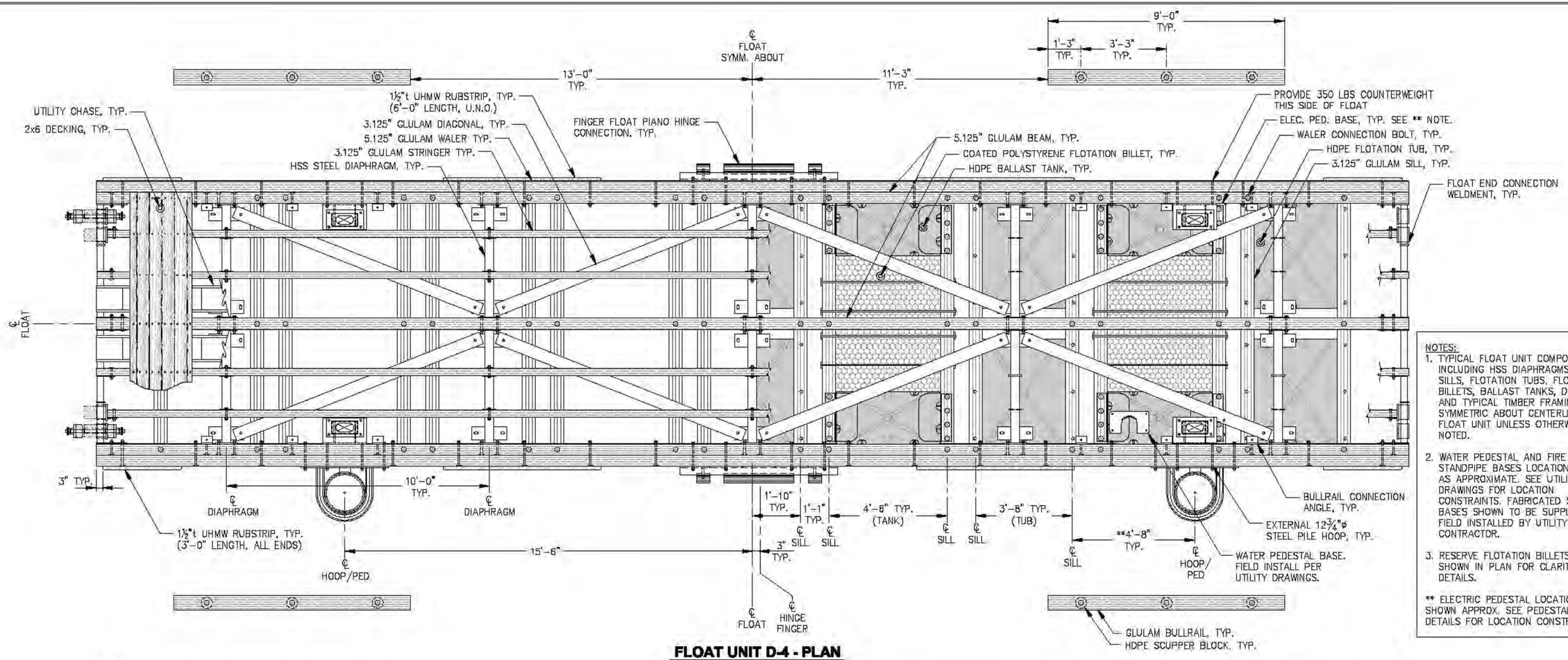

FLOAT UNIT D-4 - PLAN

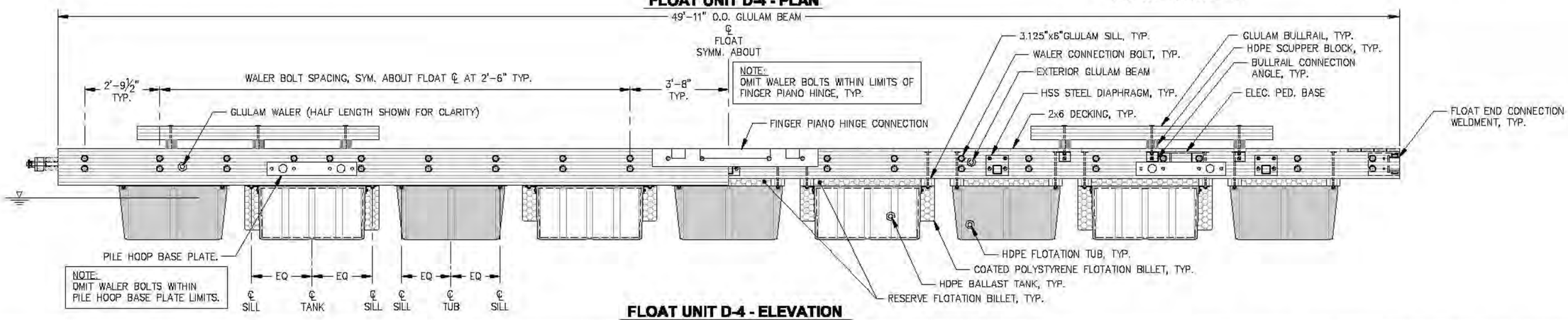

FLOAT UNIT D-4 - ELEVATION

NOTES:

1. TYPICAL FLOAT UNIT COMPONENTS INCLUDING HSS DIAPHRAGMS, GLULAM SILLS, FLOTATION TUBS, FLOTATION BILLETS, BALLAST TANKS, DIAGONALS AND TYPICAL TIMBER FRAMING ARE SYMMETRIC ABOUT CENTERLINE OF FLOAT UNIT UNLESS OTHERWISE NOTED.
2. WATER PEDESTAL AND FIRE STANDPIPE BASES LOCATIONS SHOWN AS APPROXIMATE. SEE UTILITY DRAWINGS FOR LOCATION CONSTRAINTS. FABRICATED STEEL BASES SHOWN TO BE SUPPLIED AND FIELD INSTALLED BY UTILITY CONTRACTOR.
3. RESERVE FLOTATION BILLETS NOT SHOWN IN PLAN FOR CLARITY, SEE DETAILS.

** ELECTRIC PEDESTAL LOCATIONS SHOWN APPROX. SEE PEDESTAL BASE DETAILS FOR LOCATION CONSTRAINTS

REVISIONS

REV.	DATE	DESCRIPTION	DWN.	CKD.	APP.

PND ENGINEERS, INC.
9360 Glacier Highway, Ste. 100
Juneau, Alaska 99801
Phone: 907-586-2093
Fax: 907-586-2099
www.pndengineers.com

DESIGN: MS CHECKED: JLD
DRAWN: WRB APPROVED: CRS
SCALE:

STATE OF ALASKA — John L. Dekuth — CC-8847 — REGISTERED PROFESSIONAL ENGINEER
DATE: 2/28/14

CITY & BOROUGH OF JUNEAU, ALASKA
AURORA HARBOR REBUILD - PHASE I
CONTRACT NO. DH 12-160

SHEET TITLE: **MAINWALK FLOAT UNIT D-4**

PND PROJECT NO.: 122055

6.38
SHEET 85 OF 143

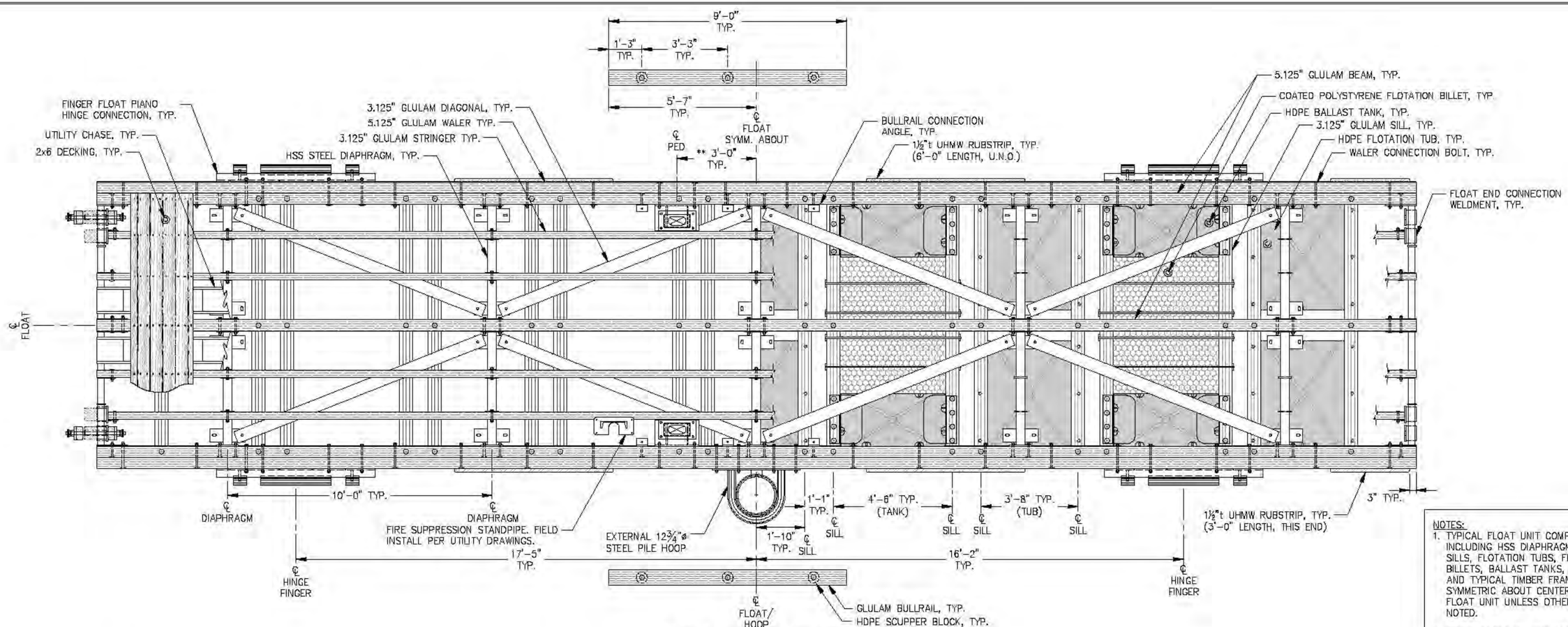

FLOAT UNIT D-5 - PLAN

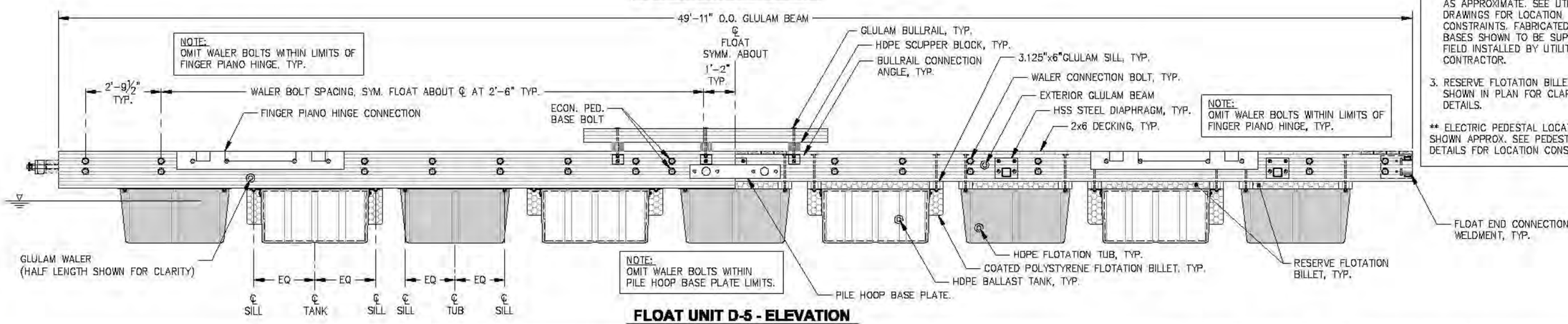

FLOAT UNIT D-5 - ELEVATION

NOTES:
1. TYPICAL FLOAT UNIT COMPONENTS INCLUDING HSS DIAPHRAGMS, GLULAM SILLS, FLOTATION TUBS, FLOTATION BILLETS, BALLAST TANKS, DIAGONALS AND TYPICAL TIMBER FRAMING ARE SYMMETRIC ABOUT CENTERLINE OF FLOAT UNIT UNLESS OTHERWISE NOTED.
2. WATER PEDESTAL AND FIRE STANDPIPE BASES LOCATIONS SHOWN AS APPROXIMATE. SEE UTILITY DRAWINGS FOR LOCATION CONSTRAINTS. FABRICATED STEEL BASES SHOWN TO BE SUPPLIED AND FIELD INSTALLED BY UTILITY CONTRACTOR.
3. RESERVE FLOTATION BILLETS NOT SHOWN IN PLAN FOR CLARITY, SEE DETAILS.

** ELECTRIC PEDESTAL LOCATIONS SHOWN APPROX. SEE PEDESTAL BASE DETAILS FOR LOCATION CONSTRAINTS

REVISIONS

REV.	DATE	DESCRIPTION	DWN.	CKD.	APP.

PND ENGINEERS, INC.
9360 Glacier Highway, Ste. 100
Juneau, Alaska 99801
Phone: 907-586-2093
Fax: 907-586-2099
www.pndengineers.com

DESIGN: MS CHECKED: JLD
DRAWN: WRB APPROVED: CRS
SCALE:

STATE OF ALASKA — 49TH — John L. Dellatti CE-8847 — SURVEYED PROFESSIONAL ENGINEER
DATE: 2/28/14

CITY & BOROUGH OF JUNEAU, ALASKA
AURORA HARBOR REBUILD - PHASE I
CONTRACT NO. DH 12-160

SHEET TITLE: **MAINWALK D FLOAT UNIT D-5**

PND PROJECT NO.: 122055

6.39
SHEET 86 OF 143

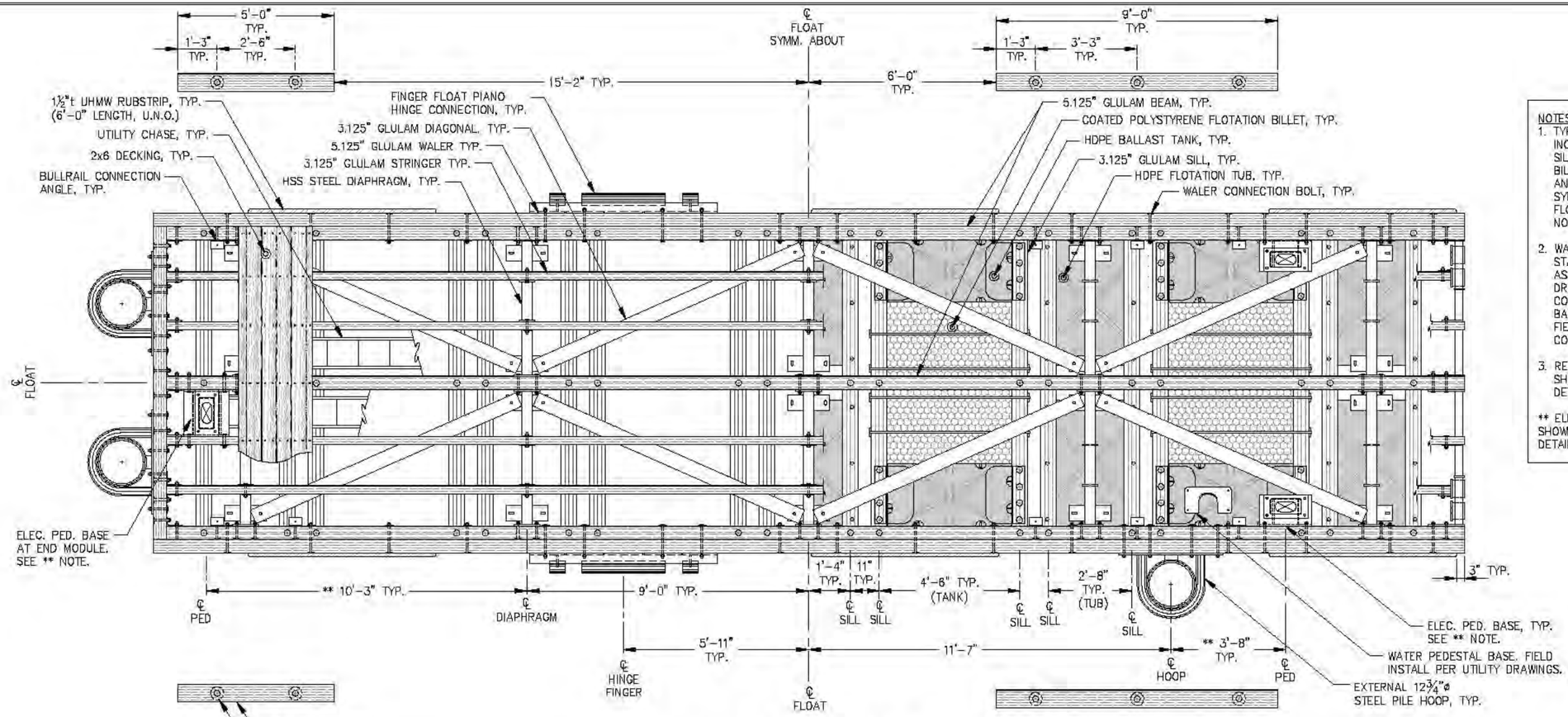

NOTES:
1. TYPICAL FLOAT UNIT COMPONENTS INCLUDING HSS DIAPHRAGMS, GLULAM SILLS, FLOTATION TUBS, FLOTATION BILLETS, BALLAST TANKS, DIAGONALS AND TYPICAL TIMBER FRAMING ARE SYMMETRIC ABOUT CENTERLINE OF FLOAT UNIT UNLESS OTHERWISE NOTED.
2. WATER PEDESTAL AND FIRE STANDPIPE BASES LOCATIONS SHOWN AS APPROXIMATE. SEE UTILITY DRAWINGS FOR LOCATION CONSTRAINTS. FABRICATED STEEL BASES SHOWN TO BE SUPPLIED AND FIELD INSTALLED BY UTILITY CONTRACTOR.
3. RESERVE FLOTATION BILLETS NOT SHOWN IN PLAN FOR CLARITY, SEE DETAILS.

** ELECTRIC PEDESTAL LOCATIONS SHOWN APPROX. SEE PEDESTAL BASE DETAILS FOR LOCATION CONSTRAINTS

FLOAT UNIT D-6 - PLAN

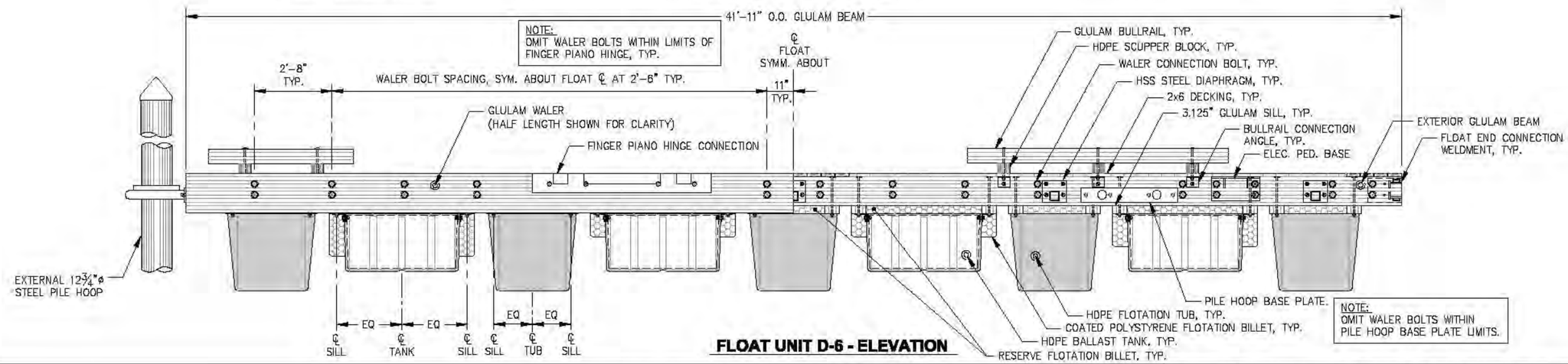

FLOAT UNIT D-6 - ELEVATION

REVISIONS

REV.	DATE	DESCRIPTION	DWN.	CKD.	APP.

PND ENGINEERS, INC.
9360 Glacier Highway, Ste. 100
Juneau, Alaska 99801
Phone: 907-586-2093
Fax: 907-586-2099
www.pndengineers.com

DESIGN: MS CHECKED: JLD
DRAWN: WRB APPROVED: CRS
SCALE:
DATE: 2/28/14

CITY & BOROUGH OF JUNEAU, ALASKA
AURORA HARBOR REBUILD - PHASE I
CONTRACT NO. DH 12-160

SHEET TITLE: MAINWALK D FLOAT UNIT D-6

PND PROJECT NO.: 122055

6.40
SHEET 87 OF 143

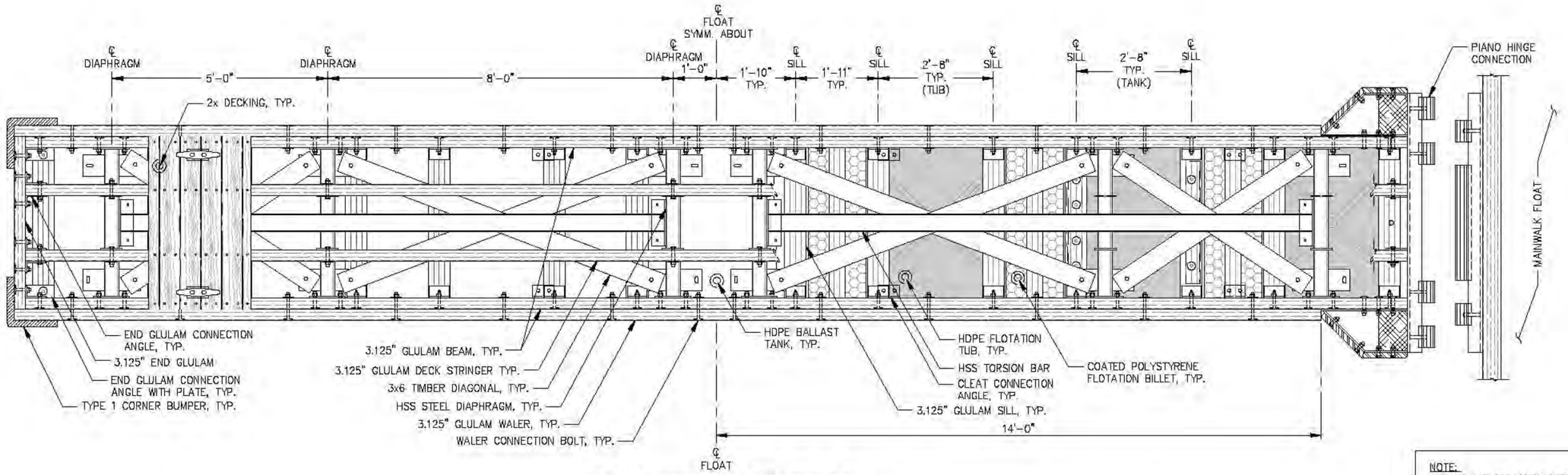

4' x 32' FINGER FLOAT UNIT PLAN

NOTE:
TYPICAL FINGER FLOAT UNIT COMPONENTS INCLUDING HSS DIAPHRAGMS, GLULAM SILLS, FLOTATION TUBS, FLOTATION BILLETS, BALLAST TANKS, DIAGONAL AND TYPICAL TIMBER FRAMING ARE SYMMETRIC ABOUT CENTERLINE OF FLOAT UNIT UNLESS OTHERWISE NOTED.

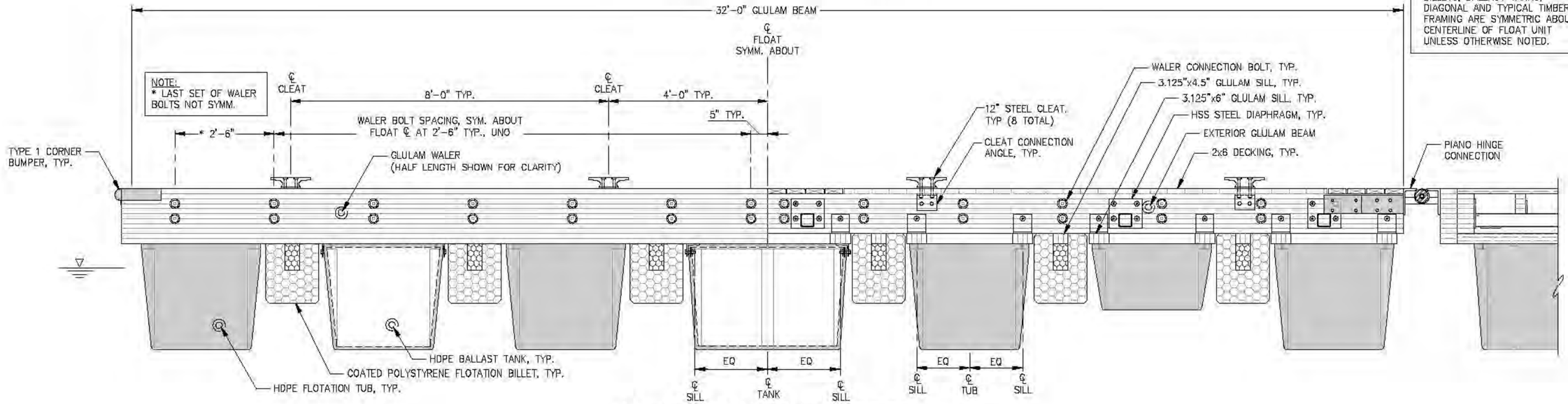

4' x 32' FINGER FLOAT UNIT ELEVATION

REVISIONS

REV.	DATE	DESCRIPTION	DWN.	CKD.	APP.

P N D ENGINEERS, INC.
9360 Glacier Highway, Ste. 100
Juneau, Alaska 99801
Phone: 907-586-2093
Fax: 907-586-2099
www.pndengineers.com

DESIGN: MS CHECKED: JLD
DRAWN: WRB APPROVED: CRS
SCALE:
DATE: 2/28/14

STATE OF ALASKA — 49TH — John L. DeMaio CC-8847 — REGISTERED PROFESSIONAL ENGINEER

CITY & BOROUGH OF JUNEAU, ALASKA
AURORA HARBOR REBUILD - PHASE I
CONTRACT NO. DH 12-160

SHEET TITLE:
4' x 32' FINGER FLOAT UNIT

PND PROJECT NO.: 122055

6.41
SHEET 88 OF 143

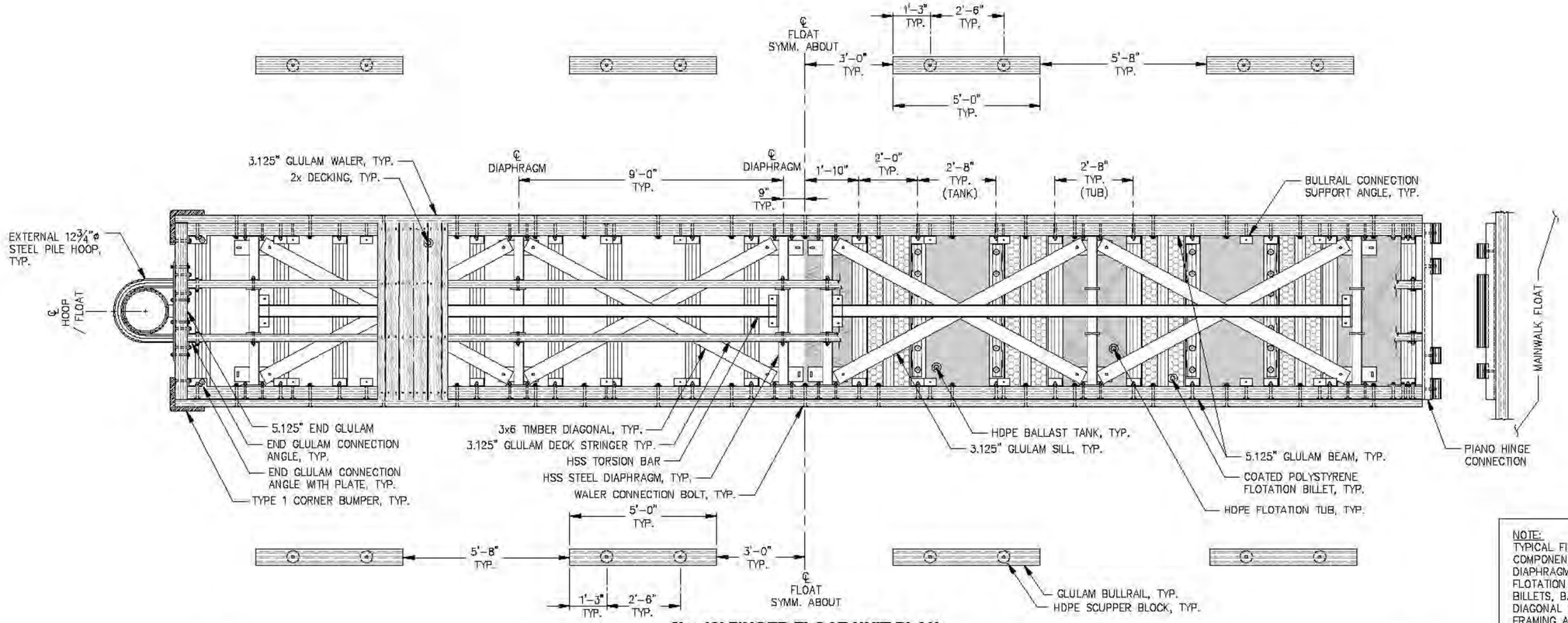

6' x 42' FINGER FLOAT UNIT PLAN

NOTE:
TYPICAL FINGER FLOAT UNIT COMPONENTS INCLUDING HSS DIAPHRAGMS, GLULAM SILLS, FLOTATION TUBS, FLOTATION BILLETS, BALLAST TANKS, DIAGONAL AND TYPICAL TIMBER FRAMING ARE SYMMETRIC ABOUT CENTERLINE OF FLOAT UNIT UNLESS OTHERWISE NOTED.

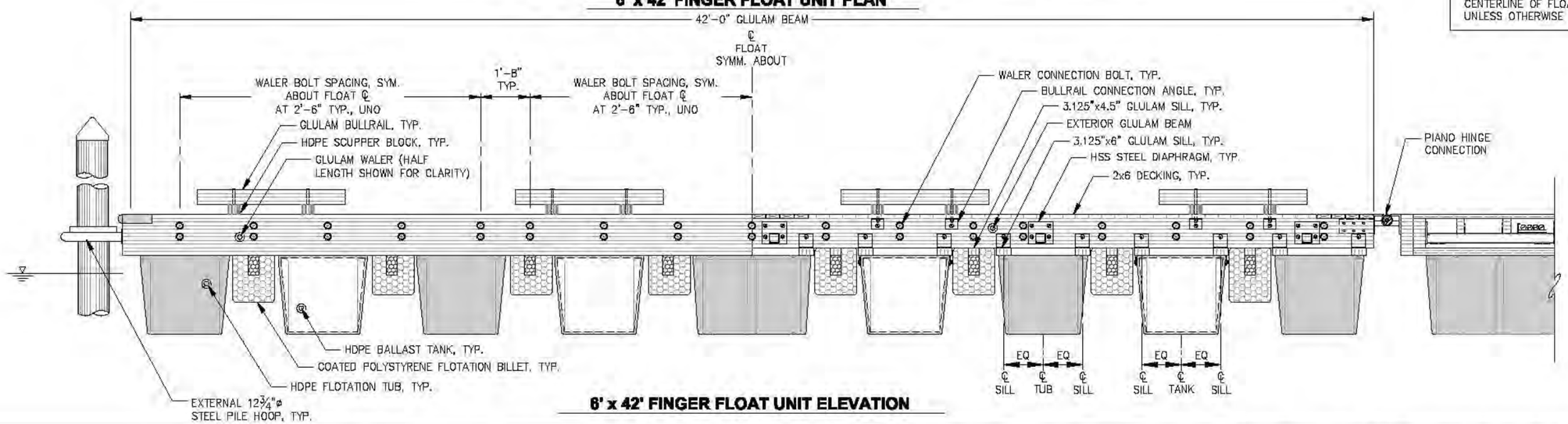

6' x 42' FINGER FLOAT UNIT ELEVATION

REVISIONS

REV.	DATE	DESCRIPTION	DWN.	CKD.	APP.

PND ENGINEERS, INC.
9360 Glacier Highway, Ste. 100
Juneau, Alaska 99801
Phone: 907-586-2093
Fax: 907-586-2099
www.pndengineers.com

DESIGN: MS CHECKED: JLD
DRAWN: WRB APPROVED: CRS
SCALE:

STATE OF ALASKA — John L. Dekuh — CC-8847 — REGISTERED PROFESSIONAL ENGINEER
DATE: 2/28/14

CITY & BOROUGH OF JUNEAU, ALASKA
AURORA HARBOR REBUILD - PHASE I
CONTRACT NO. DH 12-160

SHEET TITLE:
6' x 42' FINGER FLOAT UNIT

PND PROJECT NO.: 122055

6.42
SHEET 88 OF 143

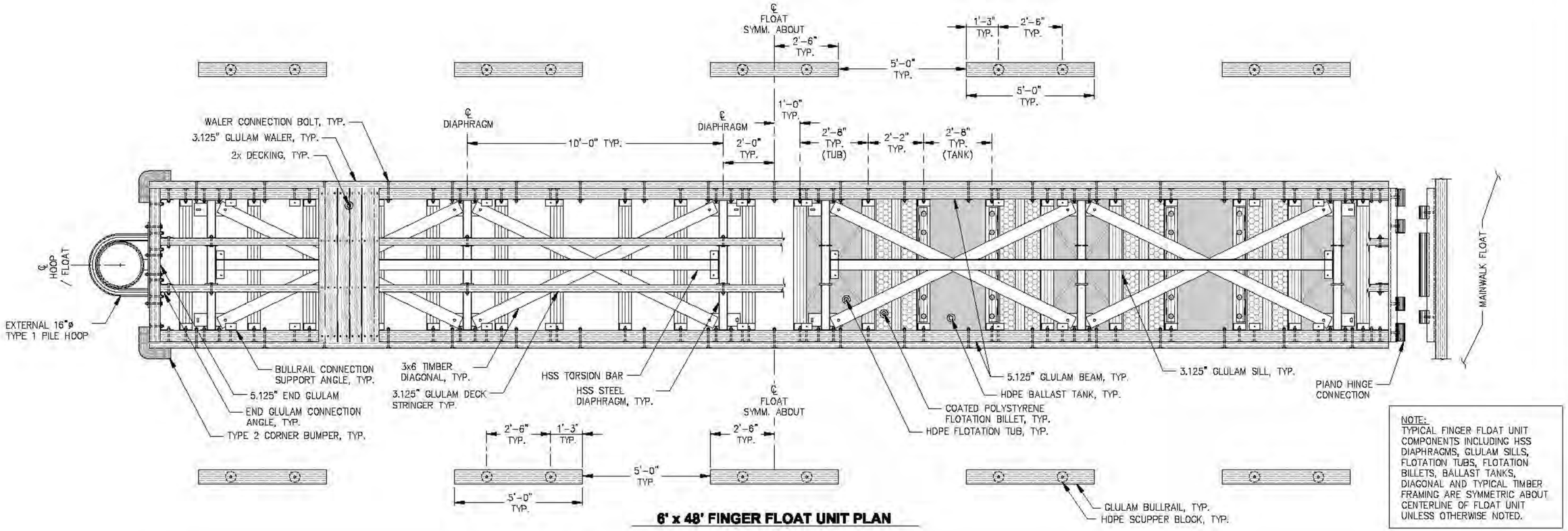

6' x 48' FINGER FLOAT UNIT PLAN

NOTE:
TYPICAL FINGER FLOAT UNIT COMPONENTS INCLUDING HSS DIAPHRAGMS, GLULAM SILLS, FLOTATION TUBS, FLOTATION BILLETS, BALLAST TANKS, DIAGONAL AND TYPICAL TIMBER FRAMING ARE SYMMETRIC ABOUT CENTERLINE OF FLOAT UNIT UNLESS OTHERWISE NOTED.

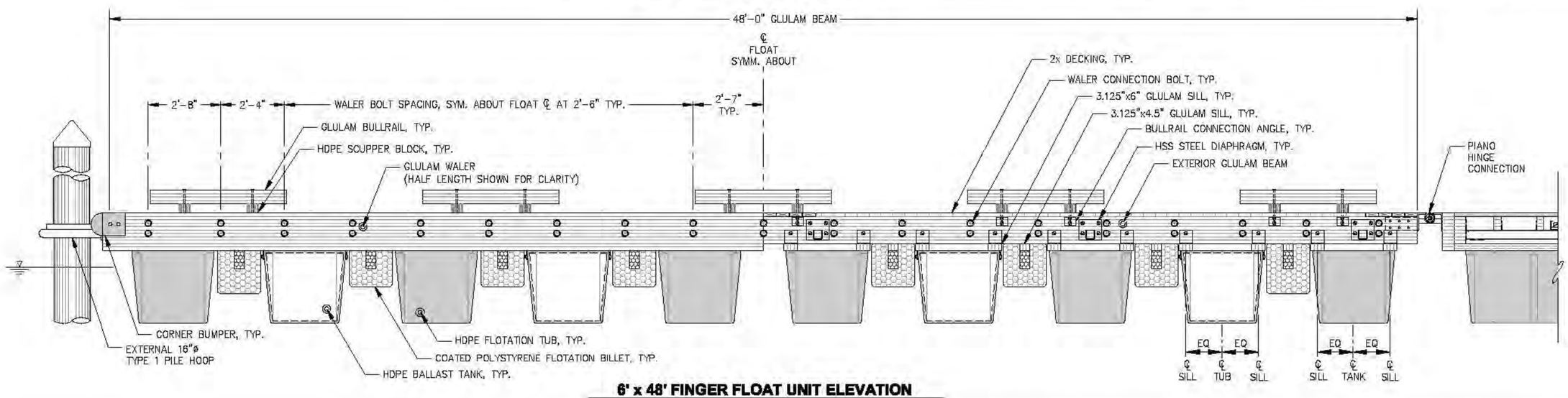

6' x 48' FINGER FLOAT UNIT ELEVATION

REVISIONS

REV.	DATE	DESCRIPTION	DWN.	CKD.	APP.

P N D ENGINEERS, INC.
9360 Glacier Highway, Ste. 100
Juneau, Alaska 99801
Phone: 907-586-2093
Fax: 907-586-2099
www.pndengineers.com

DESIGN: MS CHECKED: JLD
DRAWN: WRB APPROVED: CRS
SCALE:

STATE OF ALASKA — John L. DeMuth — CE-8847 — REGISTERED PROFESSIONAL ENGINEER
DATE: 2/28/14

CITY & BOROUGH OF JUNEAU, ALASKA
AURORA HARBOR REBUILD - PHASE I
CONTRACT NO. DH 12-160

SHEET TITLE:
6' x 48' FINGER FLOAT UNIT

PND PROJECT NO.: 122055

6.43
SHEET 80 OF 143

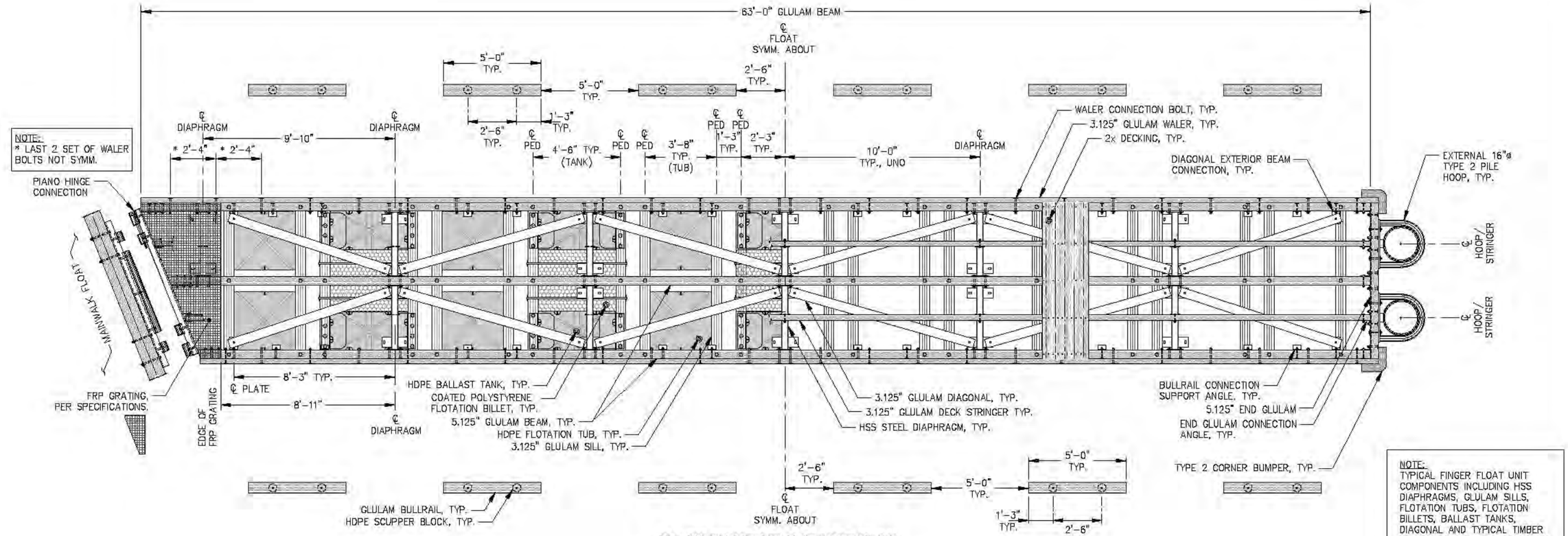

8' x 60' FINGER FLOAT UNIT PLAN

NOTE:
TYPICAL FINGER FLOAT UNIT COMPONENTS INCLUDING HSS DIAPHRAGMS, GLULAM SILLS, FLOTATION TUBS, FLOTATION BILLETS, BALLAST TANKS, DIAGONAL AND TYPICAL TIMBER FRAMING ARE SYMMETRIC ABOUT CENTERLINE OF FLOAT UNIT UNLESS OTHERWISE NOTED.

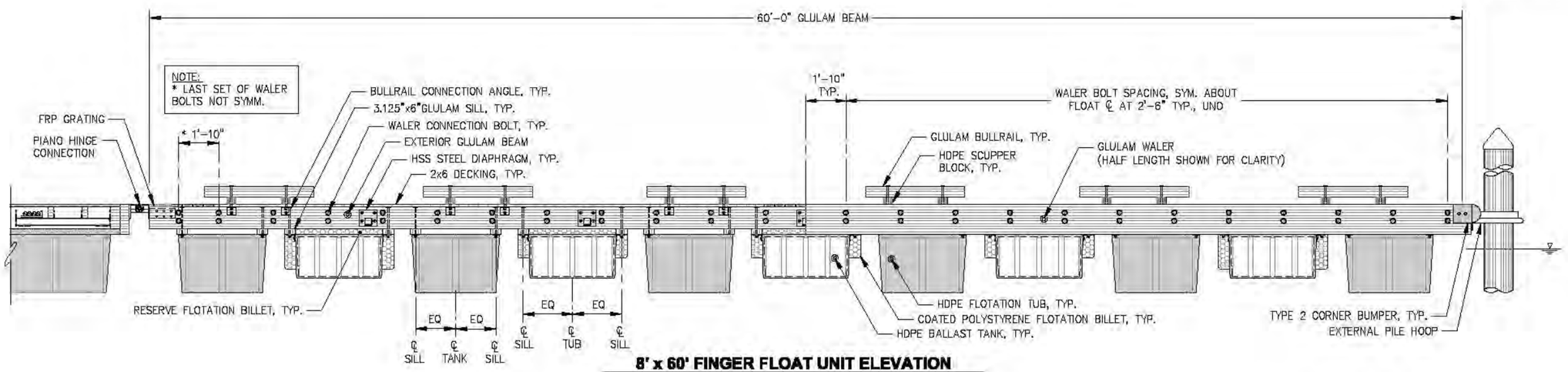

8' x 60' FINGER FLOAT UNIT ELEVATION

REVISIONS

REV.	DATE	DESCRIPTION	DWN.	CKD.	APP.

P N D ENGINEERS, INC.
9360 Glacier Highway, Ste. 100
Juneau, Alaska 99801
Phone: 907-586-2093
Fax: 907-586-2099
www.pndengineers.com

DESIGN: MS CHECKED: JLD
DRAWN: WRB APPROVED: CRS
SCALE:
DATE: 2/28/14

STATE OF ALASKA — JOHN L. DeMOTT — CC-8847 — REGISTERED PROFESSIONAL ENGINEER

CITY & BOROUGH OF JUNEAU, ALASKA
AURORA HARBOR REBUILD - PHASE I
CONTRACT NO. DH 12-160

SHEET TITLE:
8' x 60' FINGER FLOAT UNIT

PND PROJECT NO: 122055

6.44
SHEET 81 OF 143

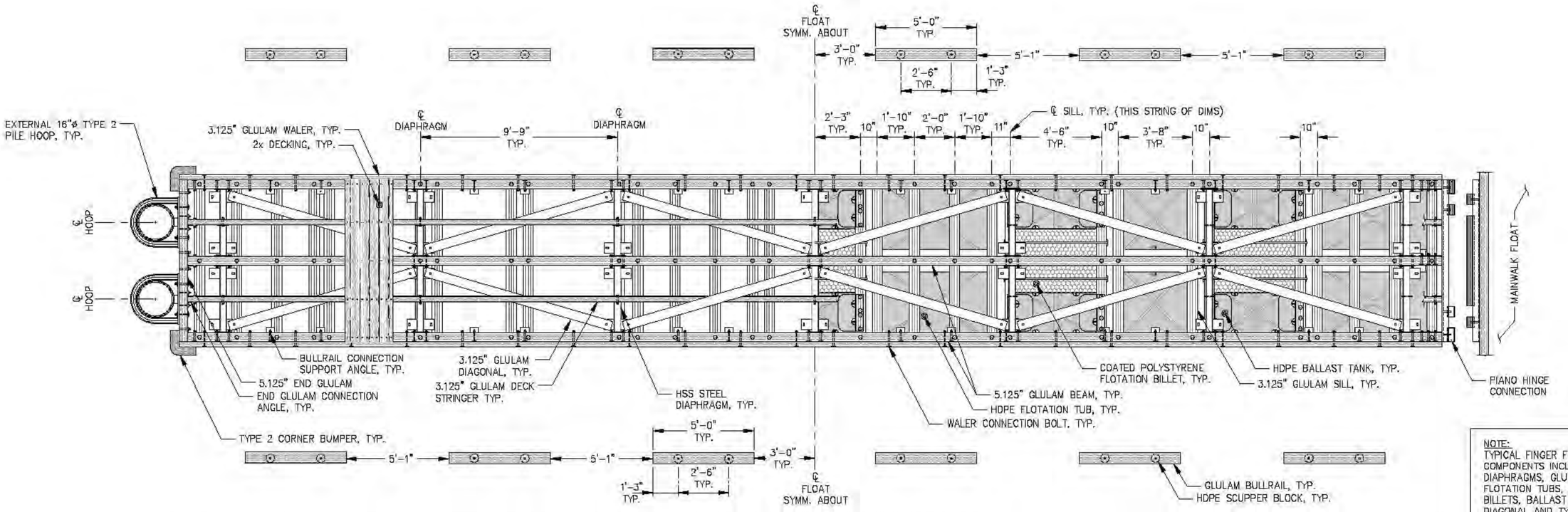

NOTE:
TYPICAL FINGER FLOAT UNIT COMPONENTS INCLUDING HSS DIAPHRAGMS, GLULAM SILLS, FLOTATION TUBS, FLOTATION BILLETS, BALLAST TANKS, DIAGONAL AND TYPICAL TIMBER FRAMING ARE SYMMETRIC ABOUT CENTERLINE OF FLOAT UNIT UNLESS OTHERWISE NOTED.

8' x 62' FINGER FLOAT UNIT PLAN

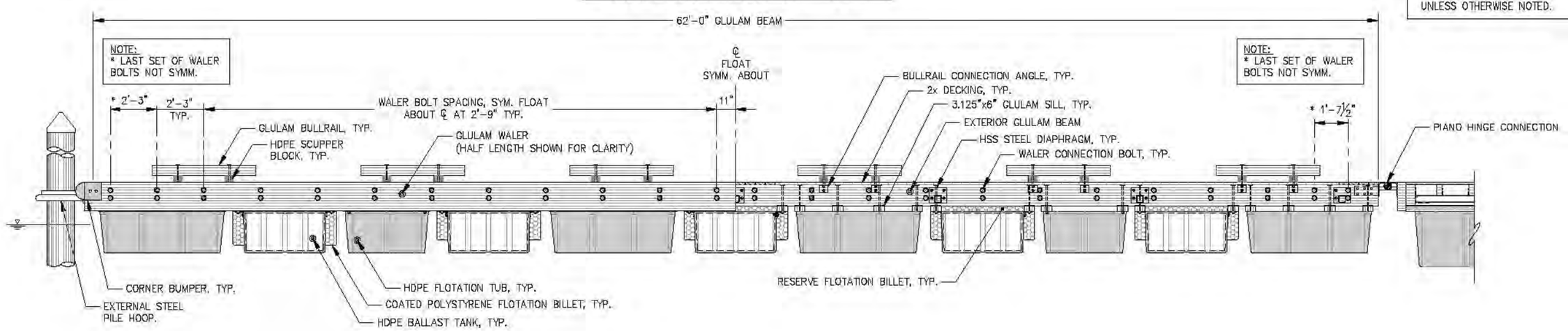

8' x 62' FINGER FLOAT UNIT ELEVATION

REVISIONS

REV.	DATE	DESCRIPTION	DWN.	CKD.	APP.

PND ENGINEERS, INC.
9360 Glacier Highway, Ste. 100
Juneau, Alaska 99801
Phone: 907-586-2093
Fax: 907-586-2099
www.pndengineers.com

DESIGN: MS CHECKED: JLD
DRAWN: WRB APPROVED: CRS
SCALE:

STATE OF ALASKA — John L. Dekuth CE-8847 — REGISTERED PROFESSIONAL ENGINEER
DATE: 2/28/14

CITY & BOROUGH OF JUNEAU, ALASKA
AURORA HARBOR REBUILD - PHASE I
CONTRACT NO. DH 12-160

SHEET TITLE: **8' x 62' FINGER FLOAT UNIT**

PND PROJECT NO.: 122055

6.45
SHEET 82 OF 143

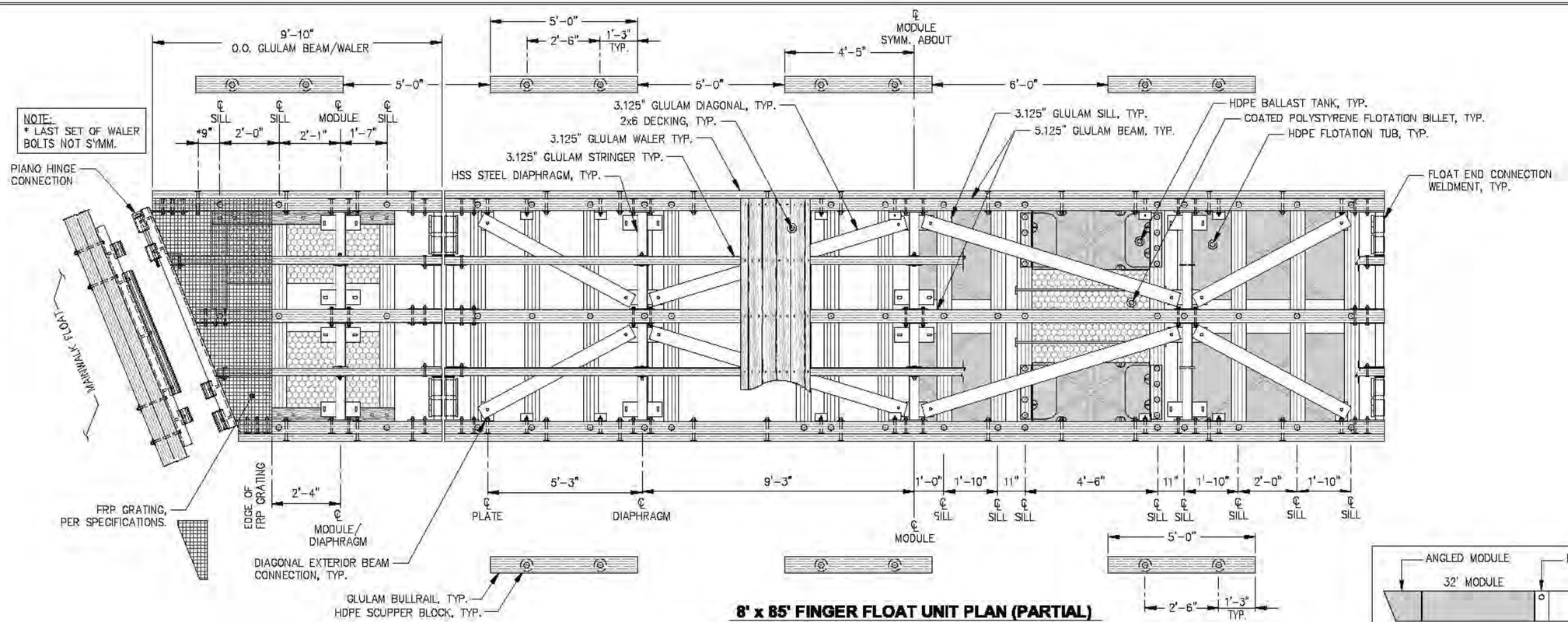

8' x 85' FINGER FLOAT UNIT PLAN (PARTIAL)

NOTE: 85' FINGER FLOAT UNIT CONSIST OF A 32' AND 42' FLOAT MODULE, A 4' INTERNAL PILE HOOP FLOAT MODULE AND A 7' (SHORT SIDE) ANGLED FLOAT UNIT.

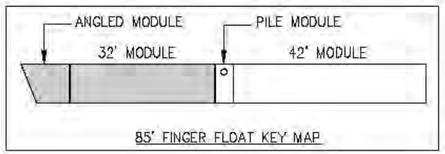

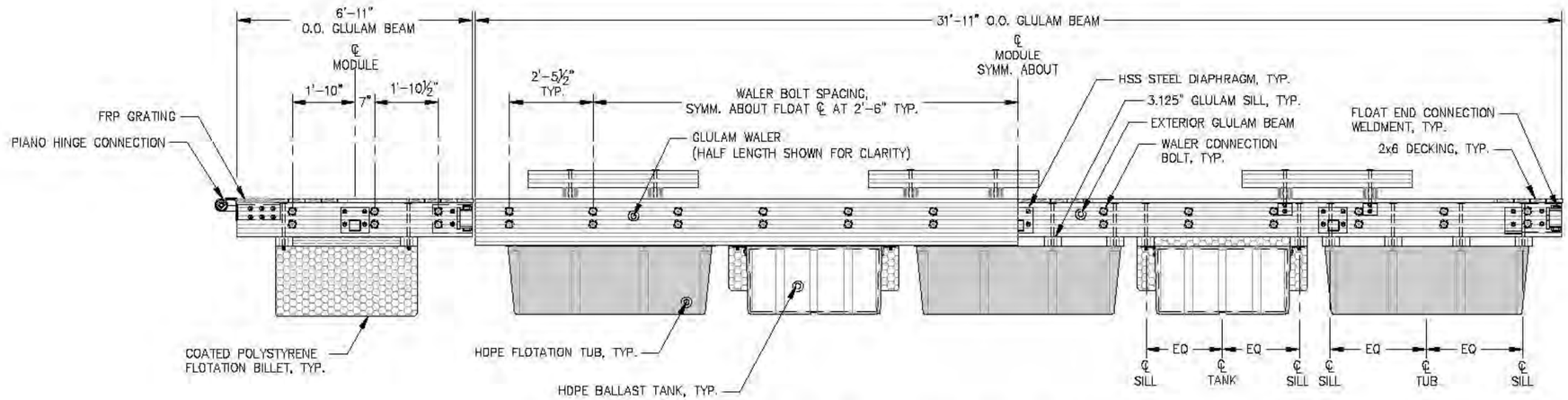

8' x 85' FINGER FLOAT UNIT ELEVATION (PARTIAL)

REVISIONS

REV.	DATE	DESCRIPTION	DWN.	CKD.	APP.

PND ENGINEERS, INC.
9360 Glacier Highway, Ste. 100
Juneau, Alaska 99801
Phone: 907-586-2093
Fax: 907-586-2099
www.pndengineers.com

DESIGN: MS CHECKED: JLD
DRAWN: WRB APPROVED: CRS
SCALE: AS SHOWN
DATE: 2/28/14

CITY & BOROUGH OF JUNEAU, ALASKA
AURORA HARBOR REBUILD - PHASE I
CONTRACT NO. DH 12-160

SHEET TITLE: 8' x 85' FINGER FLOAT UNIT

6.46

PND PROJECT NO.: 122055

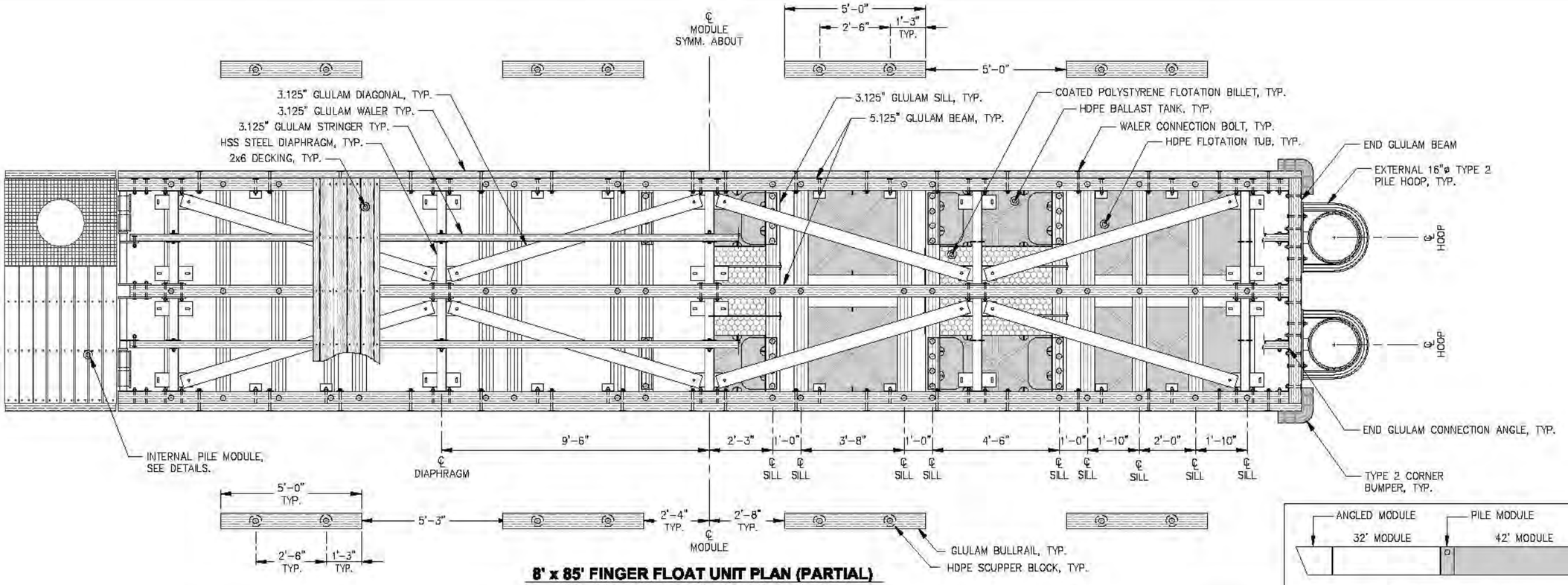

8' x 85' FINGER FLOAT UNIT PLAN (PARTIAL)

NOTE: 85' FINGER FLOAT UNIT CONSIST OF A 32' AND 42' FLOAT MODULE, A 4' INTERNAL PILE HOOP FLOAT MODULE AND A 7' (SHORT SIDE) ANGLED FLOAT UNIT.

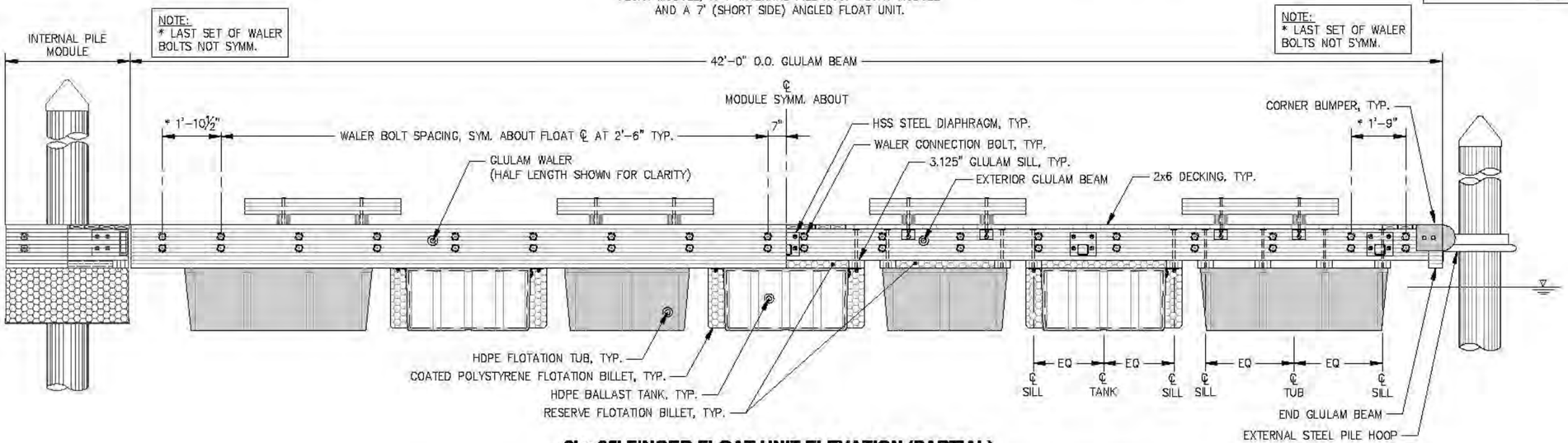

8' x 85' FINGER FLOAT UNIT ELEVATION (PARTIAL)

REVISIONS

REV.	DATE	DESCRIPTION	DWN.	CKD.	APP.

P N D ENGINEERS, INC.
9360 Glacier Highway, Ste. 100
Juneau, Alaska 99801
Phone: 907-586-2093
Fax: 907-586-2099
www.pndengineers.com

DESIGN: MS CHECKED: JLD
DRAWN: WRB APPROVED: CRS
SCALE: AS SHOWN
DATE: 2/28/14

STATE OF ALASKA — John L. Dalrath — CE-8847 — REGISTERED PROFESSIONAL ENGINEER

CITY & BOROUGH OF JUNEAU, ALASKA
AURORA HARBOR REBUILD - PHASE I
CONTRACT NO. DH 12-160

SHEET TITLE: **8' x 85' FINGER FLOAT UNIT**

PND PROJECT NO.: 122055

6.47
SHEET 94 OF 143

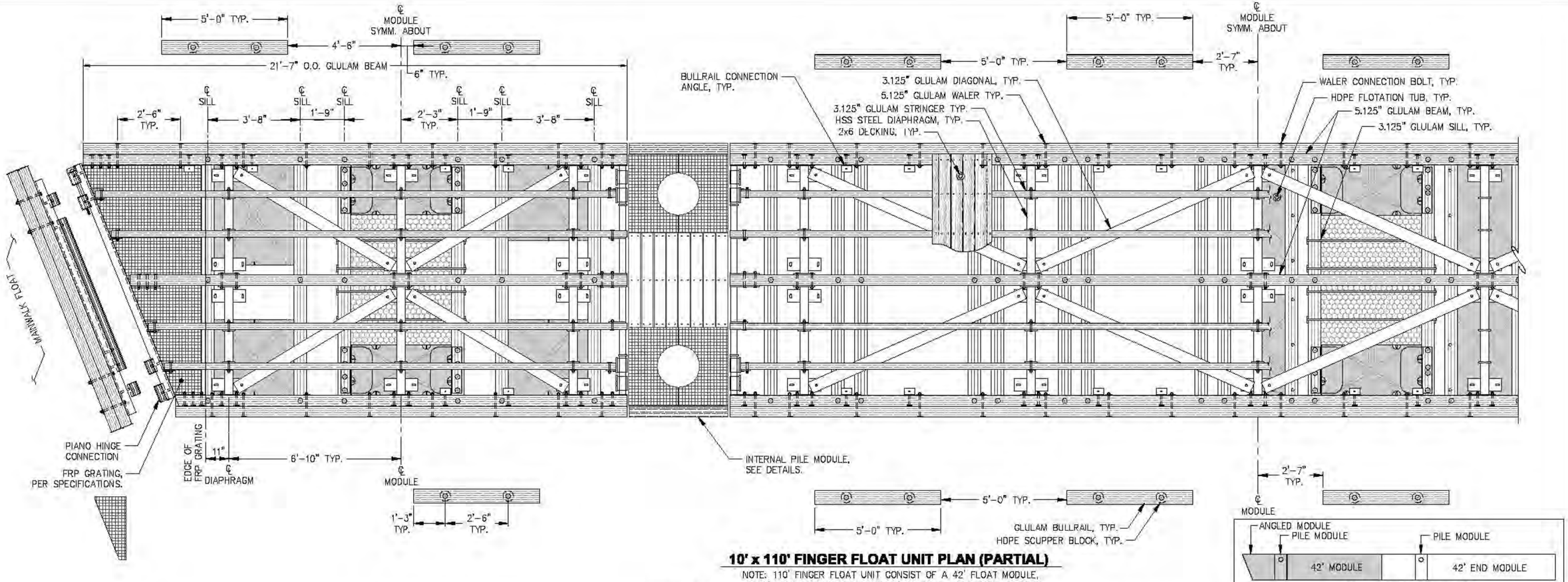

10' x 110' FINGER FLOAT UNIT PLAN (PARTIAL)

NOTE: 110' FINGER FLOAT UNIT CONSIST OF A 42' FLOAT MODULE, A 42' END FLOAT MODULE, TWO 4' INTERNAL PILE MODULES AND A 18' (SHORT SIDE) ANGLED FLOAT MODULE.

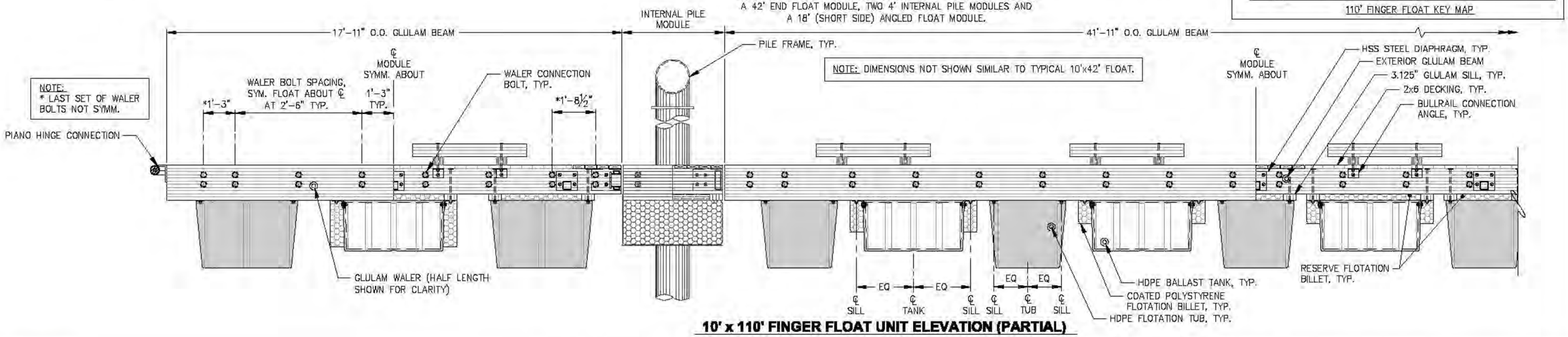

10' x 110' FINGER FLOAT UNIT ELEVATION (PARTIAL)

REVISIONS

REV.	DATE	DESCRIPTION	DWN.	CKD.	APP.

P N D ENGINEERS, INC.
9360 Glacier Highway, Ste. 100
Juneau, Alaska 99801
Phone: 907-586-2093
Fax: 907-586-2099
www.pndengineers.com

DESIGN: MS CHECKED: JLD
DRAWN: WRB APPROVED: CRS
SCALE: AS SHOWN
DATE: 2/28/14

STATE OF ALASKA — John L. Dahlvik — CE-8847 — REGISTERED PROFESSIONAL ENGINEER

CITY & BOROUGH OF JUNEAU, ALASKA
AURORA HARBOR REBUILD - PHASE I
CONTRACT NO. DH 12-160

SHEET TITLE: **10' x 110' FINGER FLOAT UNIT**

PND PROJECT NO.: 122055

6.48
SHEET 95 OF 143

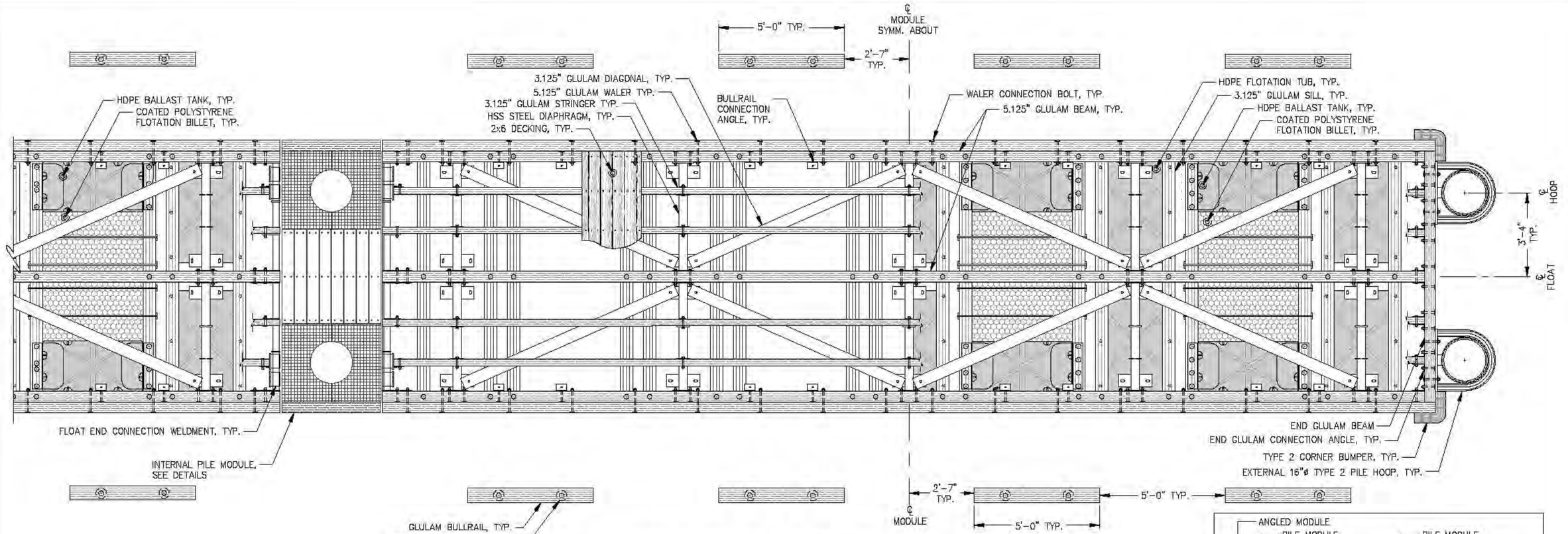

10' x 110' FINGER FLOAT UNIT PLAN (PARTIAL)

NOTE: 110' FINGER FLOAT UNIT CONSIST OF A 42' FLOAT MODULE, A 42' END FLOAT MODULE, TWO 4' INTERNAL PILE MODULES AND A 18' (SHORT SIDE) ANGLED FLOAT MODULE.

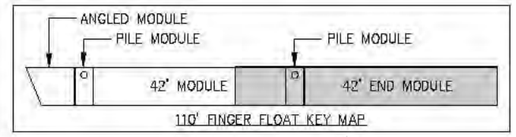

110' FINGER FLOAT KEY MAP

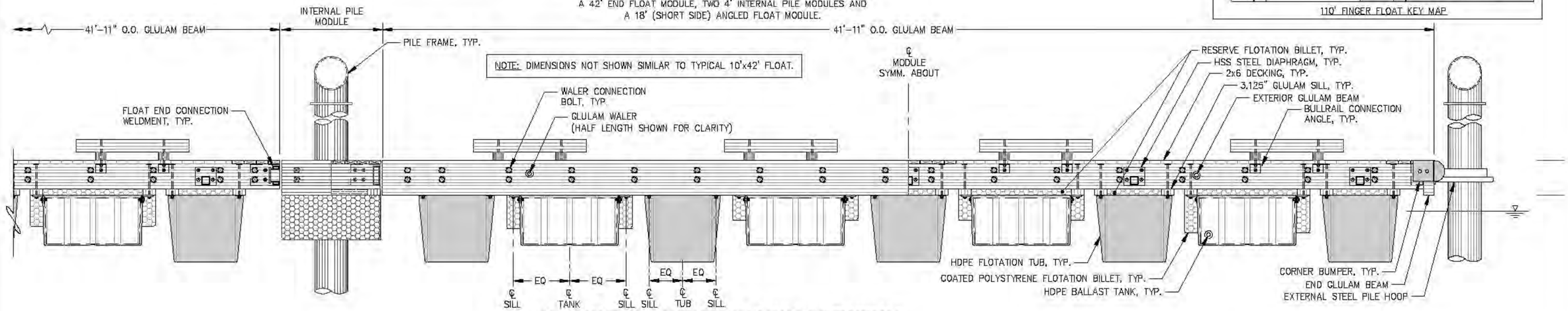

10' x 110' FINGER FLOAT UNIT ELEVATION (PARTIAL)

REVISIONS

REV.	DATE	DESCRIPTION	DWN.	CKD.	APP.

P N D ENGINEERS, INC.
9360 Glacier Highway, Ste. 100
Juneau, Alaska 99801
Phone: 907-586-2093
Fax: 907-586-2099
www.pndengineers.com

DESIGN: MS CHECKED: JLD
DRAWN: WRB APPROVED: CRS
SCALE: AS SHOWN
DATE: 2/28/14

STATE OF ALASKA — John L. Dalrath — CE-8847 — REGISTERED PROFESSIONAL ENGINEER

CITY & BOROUGH OF JUNEAU, ALASKA
AURORA HARBOR REBUILD - PHASE I
CONTRACT NO. DH 12-160

SHEET TITLE: **10' x 110' FINGER FLOAT UNIT**

PND PROJECT NO.: 122055

6.49
SHEET 96 OF 143

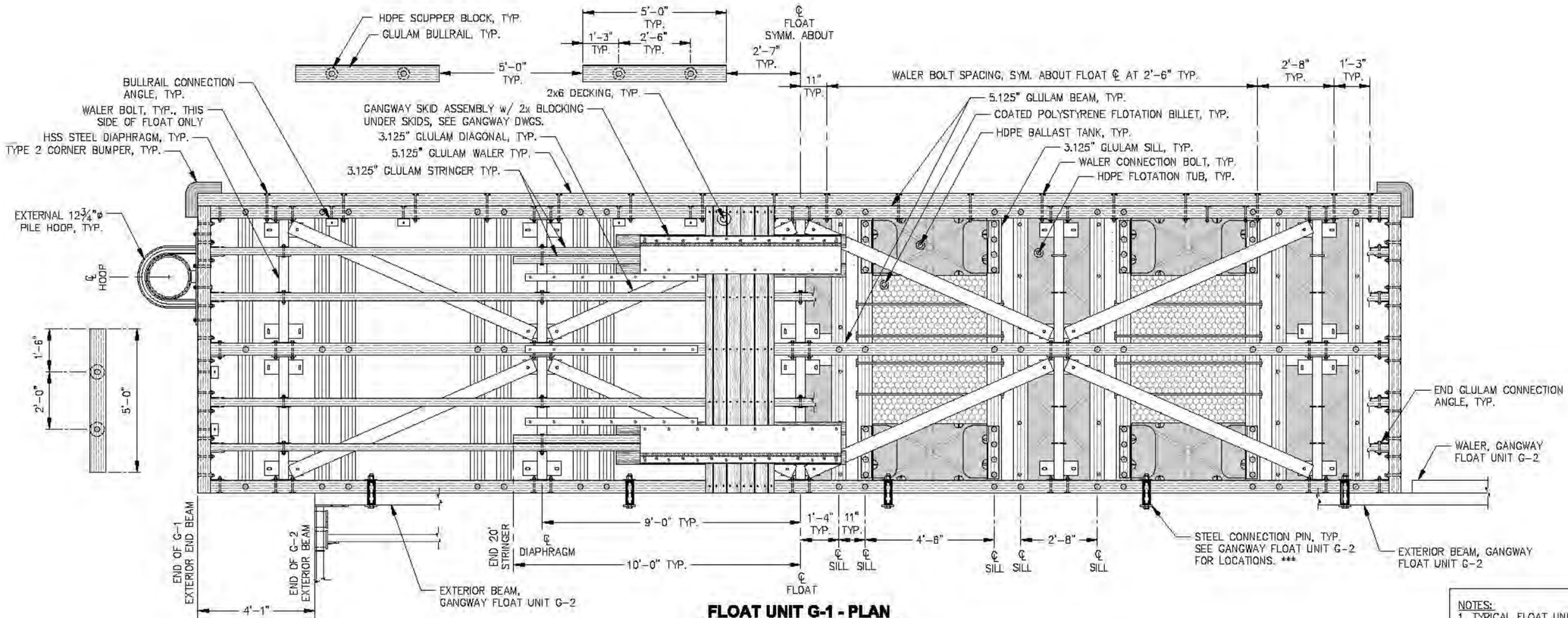

FLOAT UNIT G-1 - PLAN

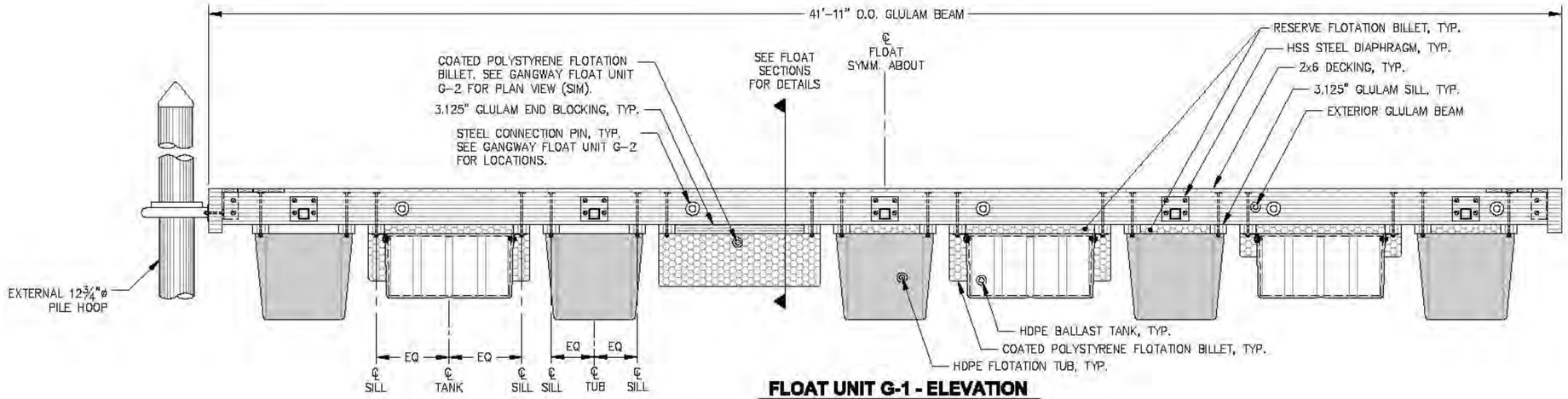

FLOAT UNIT G-1 - ELEVATION

NOTES:
1. TYPICAL FLOAT UNIT COMPONENTS INCLUDING HSS DIAPHRAGMS, GLULAM SILLS, FLOTATION TUBS, FLOTATION BILLETS, BALLAST TANKS, DIAGONALS AND TYPICAL TIMBER FRAMING ARE SYMMETRIC ABOUT CENTERLINE OF FLOAT UNIT UNLESS OTHERWISE NOTED.
2. RESERVE FLOTATION BILLETS NOT SHOWN IN PLAN FOR CLARITY, SEE DETAILS.

*** ADJOINING EXTERIOR GLULAM BEAMS FOR FLOAT UNITS G-1 AND G-2 SHALL BE MATCH-DRILLED TO ASSURE ALIGNMENT OF CONNECTION PIN HOLES.

REVISIONS

REV.	DATE	DESCRIPTION	DWN.	CKD.	APP.

PND ENGINEERS, INC.
9360 Glacier Highway, Ste. 100
Juneau, Alaska 99801
Phone: 907-586-2093
Fax: 907-586-2099
www.pndengineers.com

DESIGN: MS CHECKED: JLD
DRAWN: WRB APPROVED: CRS
SCALE:

STATE OF ALASKA — 49TH — John L. Dekuth CE-8847 — REGISTERED PROFESSIONAL ENGINEER
DATE: 2/28/14

CITY & BOROUGH OF JUNEAU, ALASKA
AURORA HARBOR REBUILD - PHASE I
CONTRACT NO. DH 12-160

SHEET TITLE: GANGWAY FLOAT UNIT G-1

PND PROJECT NO.: 122055

6.50
SHEET 87 OF 143

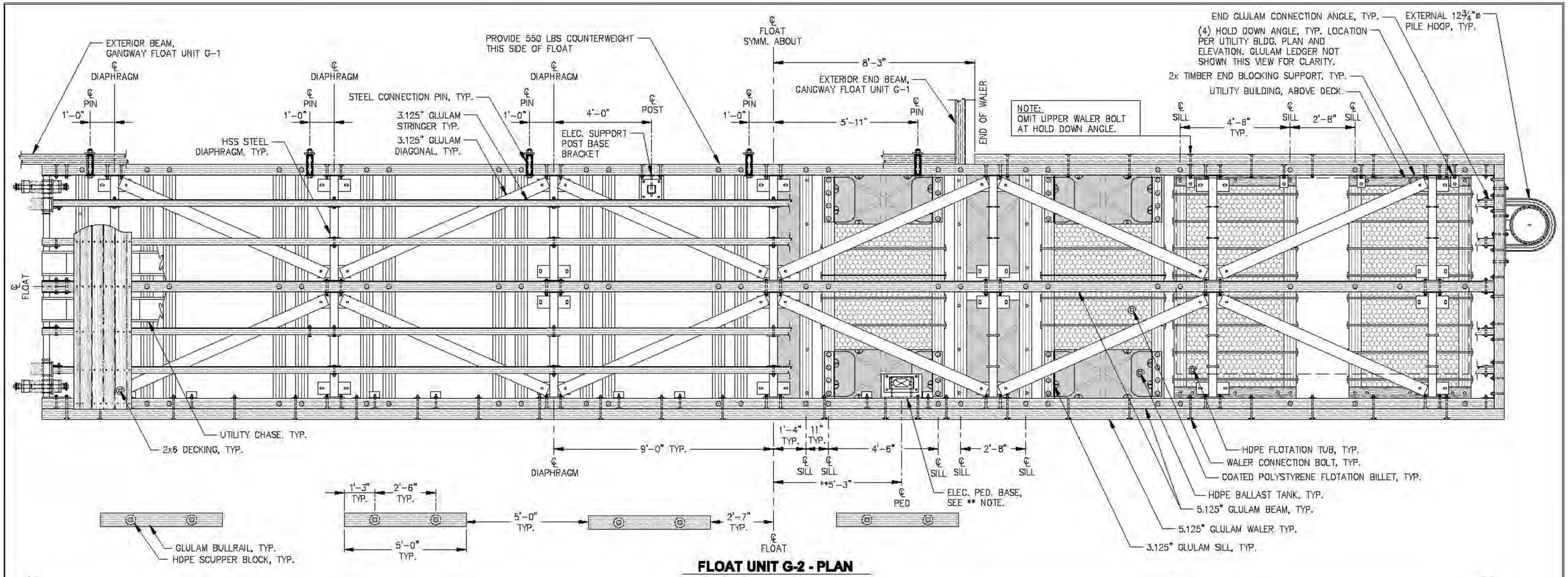

FLOAT UNIT G-2 - PLAN

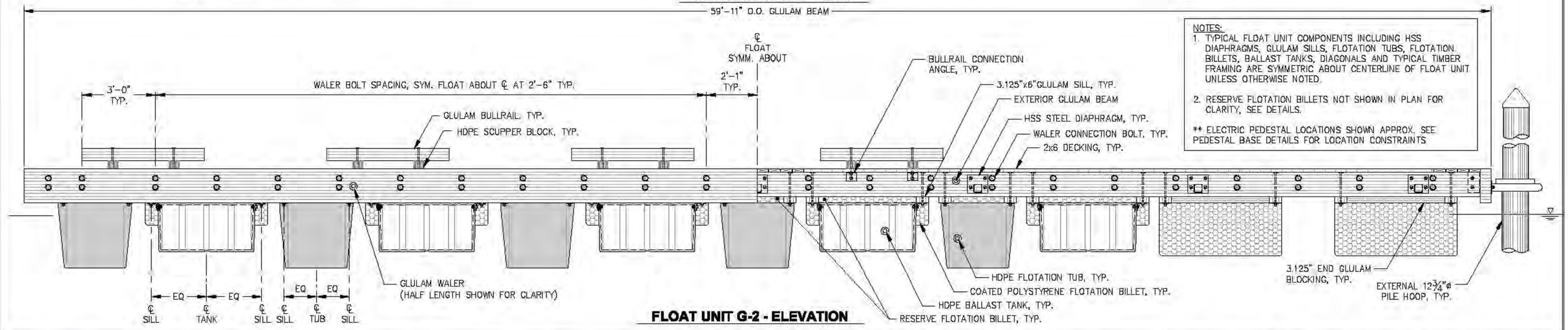

FLOAT UNIT G-2 - ELEVATION

REVISIONS

REV.	DATE	DESCRIPTION	DWN.	CKD.	APP.

P N D ENGINEERS, INC.
9360 Glacier Highway, Ste. 100
Juneau, Alaska 99801
Phone: 907-586-2093
Fax: 907-586-2099
www.pndengineers.com

DESIGN: MS CHECKED: JLD
DRAWN: WRB APPROVED: CRS
SCALE:
DATE: 2/28/14

CITY & BOROUGH OF JUNEAU, ALASKA
AURORA HARBOR REBUILD - PHASE I
CONTRACT NO. DH 12-160

SHEET TITLE: GANGWAY FLOAT UNIT G-2

PND PROJECT NO.: 122055

6.51
SHEET 98 OF 143

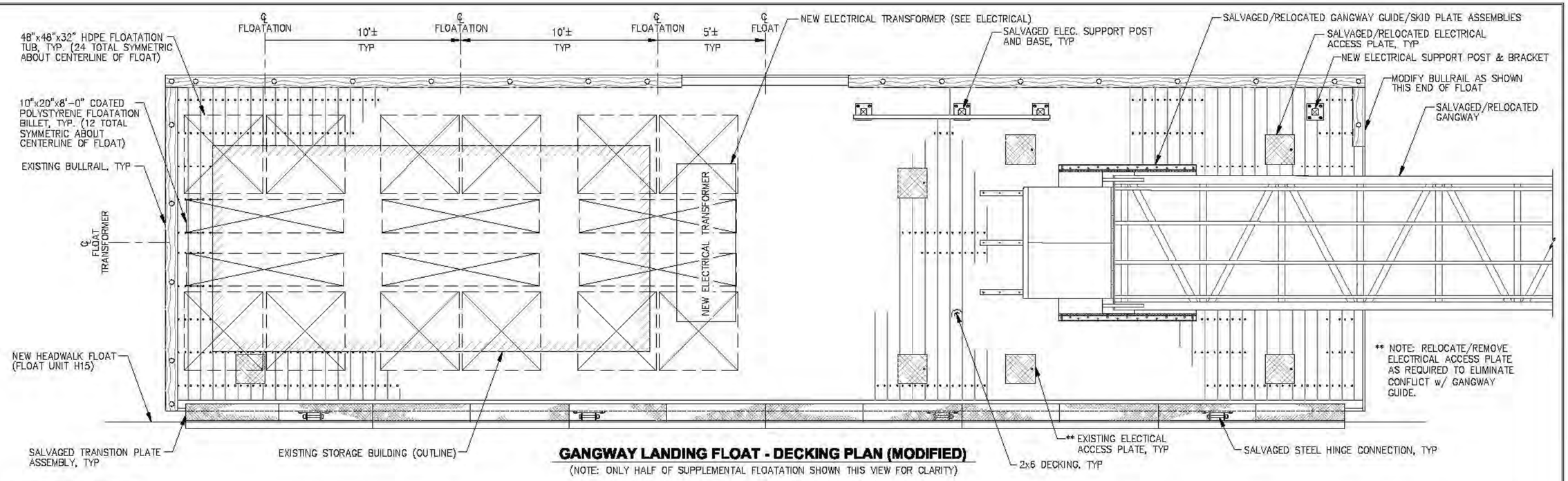

GANGWAY LANDING FLOAT - DECKING PLAN (MODIFIED)

(NOTE: ONLY HALF OF SUPPLEMENTAL FLOATATION SHOWN THIS VIEW FOR CLARITY)

DEMOLITION/SALVAGE WORK SUMMARY

1) REMOVE AND SALVAGE EXISTING GANGWAY AND GUIDE/SKID PLATE ASSEMBLIES.
2) REMOVE AND SALVAGE EXISTING TRANSITION PLATE AND HINGE ASSEMBLIES FROM EXISTING HEADWALK FLOAT.
3) REMOVE EXISTING ELECTRICAL EQUIPMENT AS REQUIRED AND PER ELECT. SPECS.

REFURBISHMENT WORK SUMMARY

1) REMOVE AND SALVAGE EXISTING 2X DECKING AND ACCESS PLATES AS REQUIRED.
2) REMOVE, SALVAGE AND RELOCATE EXISTING ELECTRICAL SUPPORT POST AND BASE ASSEMBLIES. INSTALL NEW POST AND BASE AS SHOWN.
3) REMOVE/MODIFY BULLRAIL (SOUTH END) TO LIMITS SHOWN.
4) MODIFY EXISTING, COATED FLOATATION BILLETS TO WIDEN AND/OR CONSTRUCT NEW UTILITY TRENCHES AS SHOWN. CUT AND RECOAT BILLETS PER SPECIFICATIONS.
5) REINSTALL SALVAGED DECKING, ACCESS PLATES, GANGWAY GUIDES AND SKID PLATES AS SHOWN. PROVIDE (25) PIECES OF ADDITIONAL 2x6x16' LONG DECKING TO REPLACE DECKING THAT MAY BE DAMAGED DURING WORK.
6) INSTALL NEW SUPPLEMENTAL FLOATATION AS SHOWN AND/OR AS DIRECTED IN THE FIELD BY THE ENGINEER.
7) INSTALL SALVAGED STEEL HINGE ASSEMBLIES AND TRANSITION PLATES TO NEW HEADWALK FLOAT PER PLANS.
8) GENERAL CONTRACTOR TO COORDINATE w/ ELECTRICAL FOR INSTALLATION OF ELECTICAL CABLES AND TRANSFORMER.

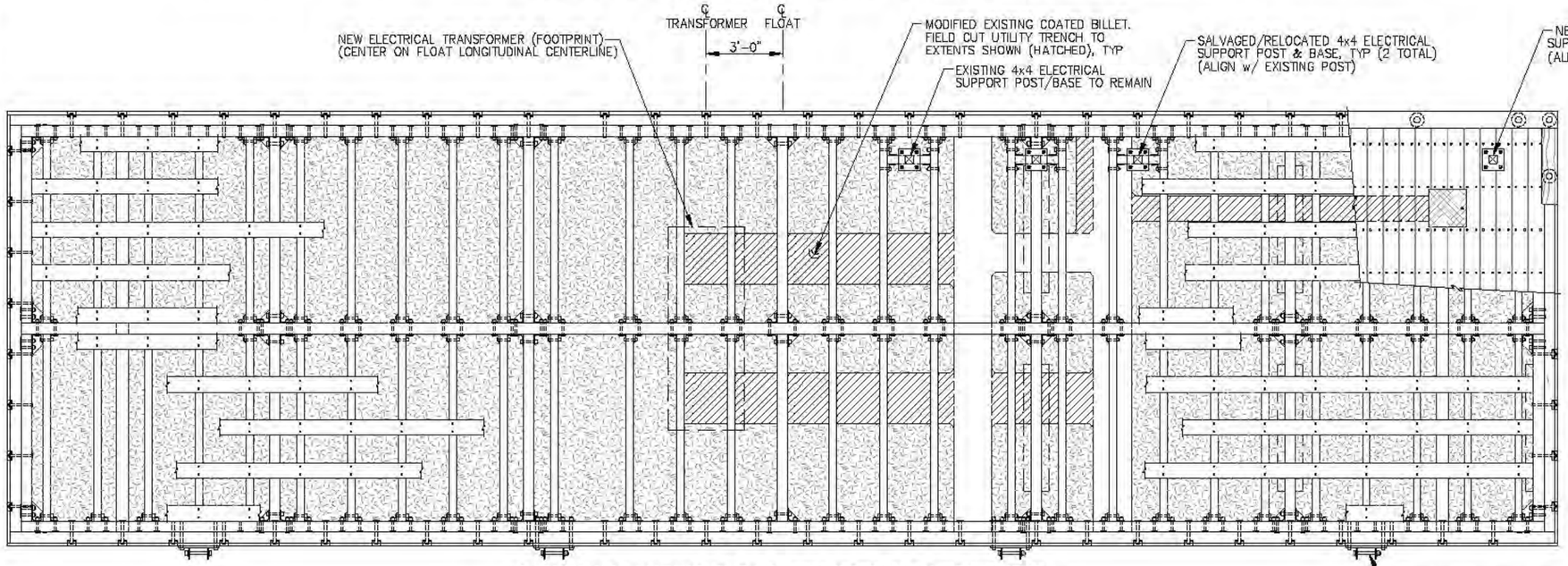

GANGWAY LANDING FLOAT - FRAMING PLAN (MODIFIED)

(NOTE: SEE EXISTING C FLOAT GANGWAY LANDING DESIGN DRAWINGS FOR DETAILS NOT SHOWN)

REVISIONS

REV.	DATE	DESCRIPTION	DWN.	CKD.	APP.

PND ENGINEERS, INC.
9360 Glacier Highway, Ste. 100
Juneau, Alaska 99801
Phone: 907-586-2093
Fax: 907-586-2099
www.pndengineers.com

DESIGN: JLD CHECKED: JLD
DRAWN: WRB APPROVED: CRS
SCALE: AS SHOWN
DATE: 2/28/14

STATE OF ALASKA — John L. DeMuth, CE-8847 — REGISTERED PROFESSIONAL ENGINEER

CITY & BOROUGH OF JUNEAU, ALASKA
AURORA HARBOR REBUILD - PHASE I
CONTRACT NO. DH 12-160

SHEET TITLE:
C FLOAT GANGWAY LANDING FLOAT

PND PROJECT NO.: 122055

6.52
SHEET 99 OF 143

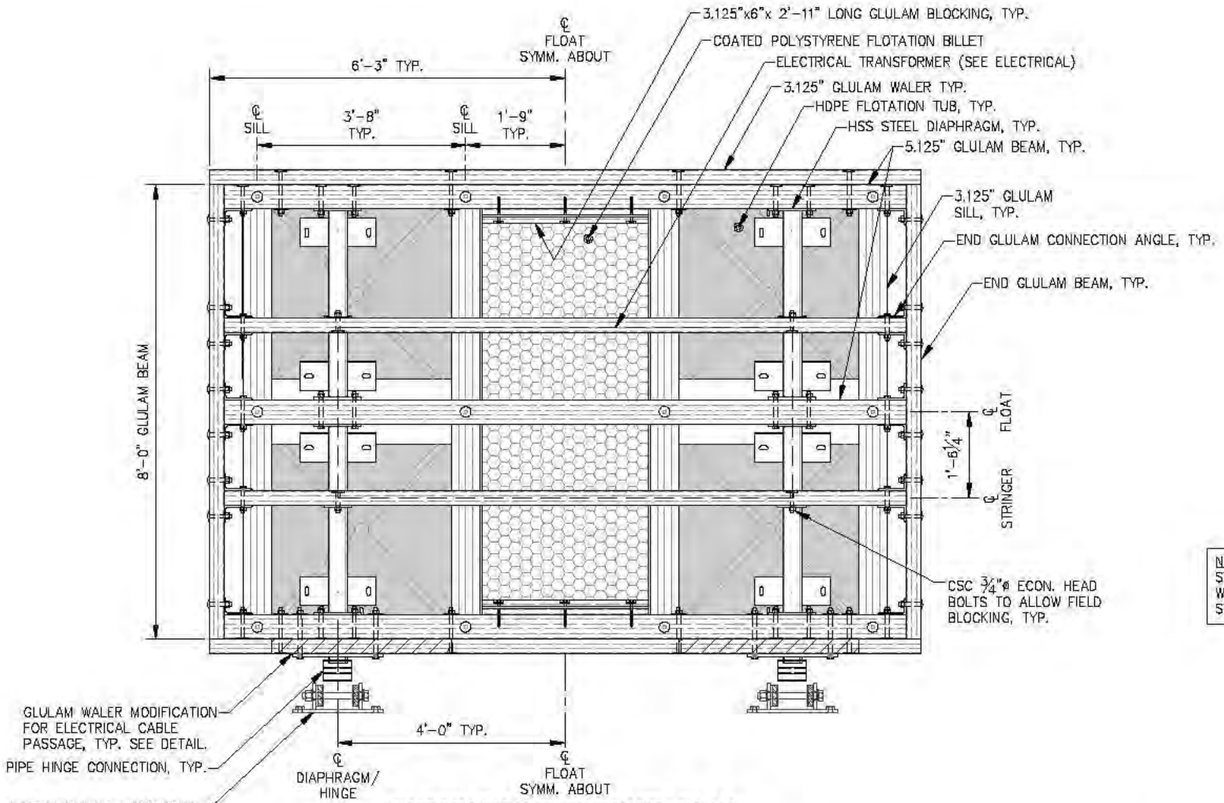

SUBSTATION FLOAT UNIT - PLAN

NOTE: FOR HSS DIAPHRAGMS, USE STANDARD DIAPHRAGM FOR 8 FOOT WIDE MODULES, LOCATE GLULAM STRINGERS AS SHOWN THIS DETAIL.

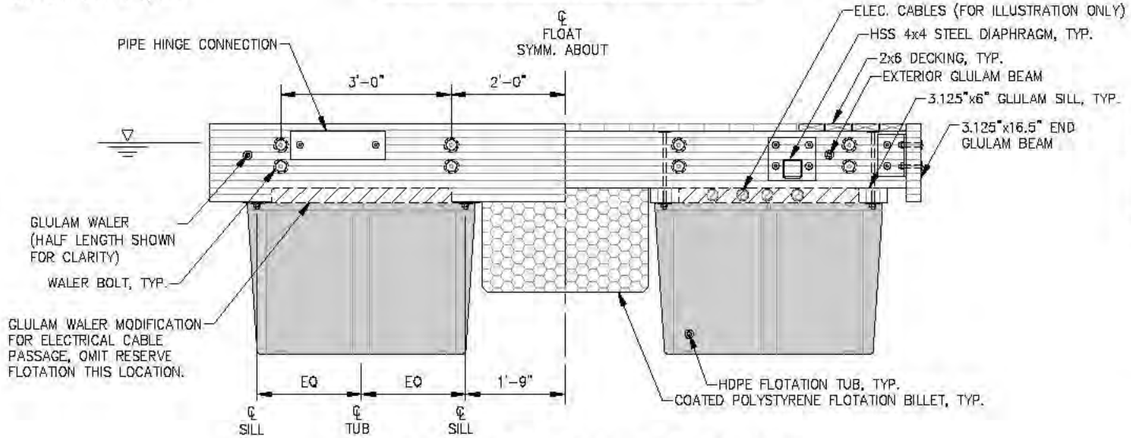

SUBSTATION FLOAT UNIT - ELEVATION

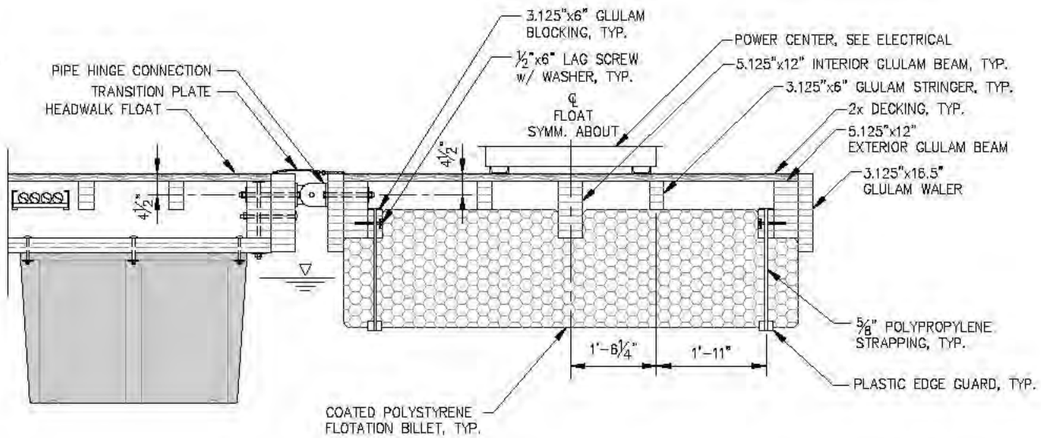

SUBSTATION FLOAT UNIT - SECTION AT BILLET

REVISIONS

REV.	DATE	DESCRIPTION	DWN.	CKD.	APP.

P N D ENGINEERS, INC.
9360 Glacier Highway, Ste. 100
Juneau, Alaska 99801
Phone: 907-586-2093
Fax: 907-586-2099
www.pndengineers.com

DESIGN: MS CHECKED: JLD
DRAWN: WRB APPROVED: CRS
SCALE:

STATE OF ALASKA — John L. Dalrymple — CE-8847 — REGISTERED PROFESSIONAL ENGINEER
DATE: 2/28/14

CITY & BOROUGH OF JUNEAU, ALASKA
AURORA HARBOR REBUILD - PHASE I
CONTRACT NO. DH 12-160

SHEET TITLE: **SUBSTATION FLOAT UNIT**

PND PROJECT NO.: 122055

6.53
SHEET 100 OF 143

NOTE: PROVIDE FRP GRATING IN THREE (3) SECTIONS AS SHOWN. FASTEN TO BEAMS AND STRINGERS USING S.S. HARDWARE PER MANUFACTURERS GUIDELINES.

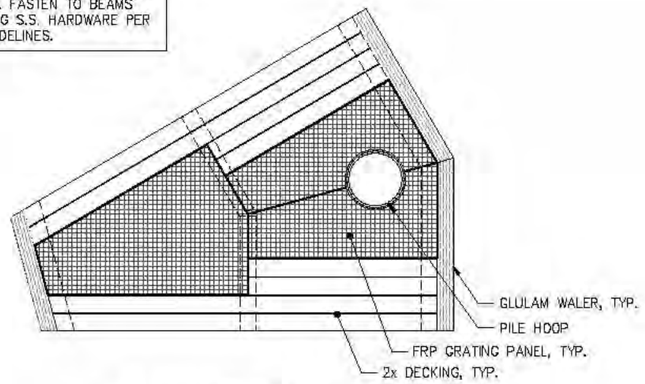

DECKING - PLAN

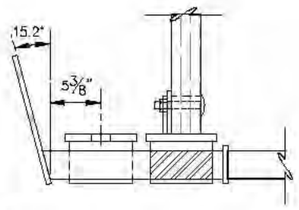

NOTE: ALL CONNECTION WELDMENT DETAILS SIMILAR TO STANDARD WITH THE NOTED EXCEPTIONS.

MODIFIED CONNECTION WELDMENT

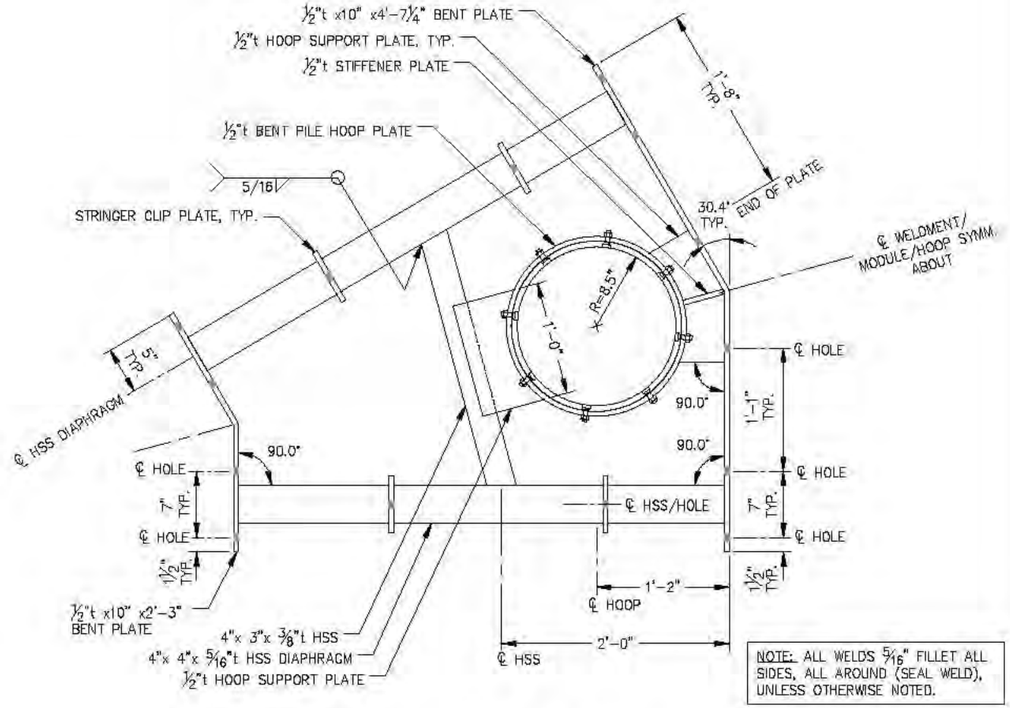

NOTE: ALL WELDS 5/16" FILLET ALL SIDES, ALL AROUND (SEAL WELD), UNLESS OTHERWISE NOTED.

PILE HOOP WELDMENT

NOTE: FOR DETAILS NOT SHOWN, REFER TO 10' FLOAT SECTION.

NOTE: INSTALL UTILITY CHASE AS SHOWN. FASTEN MITERED ENDS PER MANUFACTURER'S RECOMMENDATIONS.

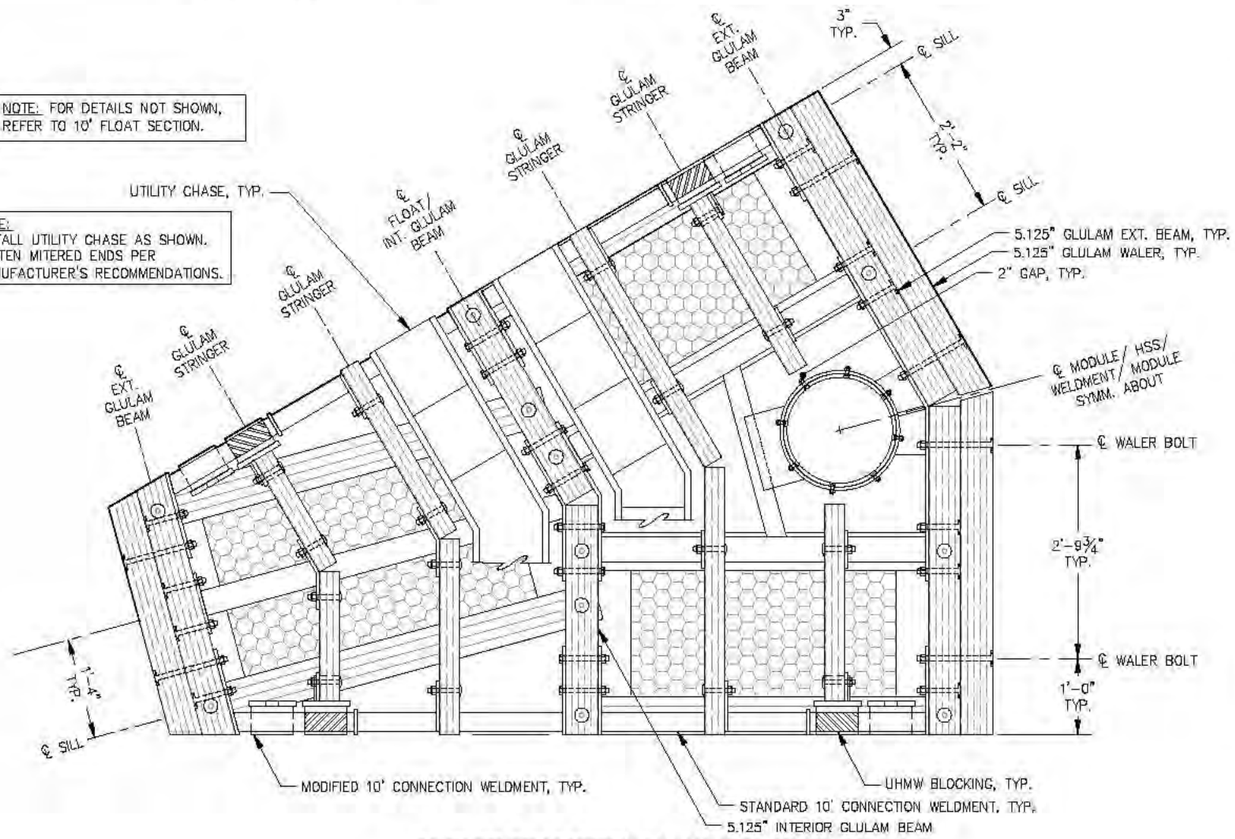

ANGLED TRANSITION MODULE A - PLAN

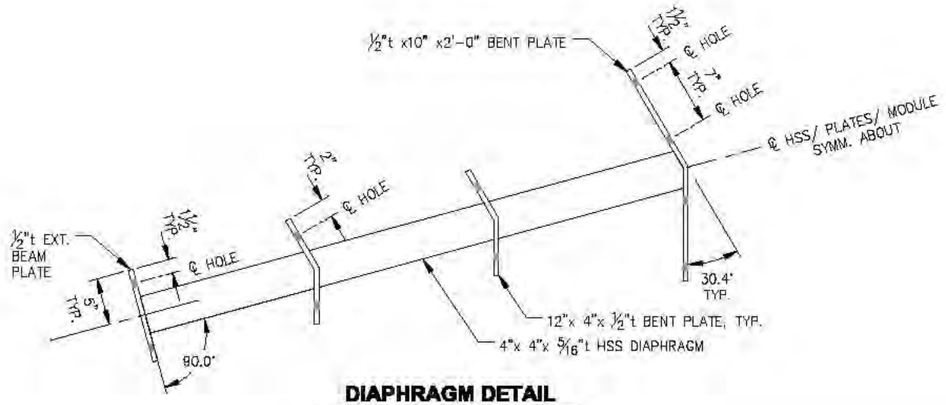

DIAPHRAGM DETAIL

REVISIONS

REV.	DATE	DESCRIPTION	DWN.	CKD.	APP.

P N D ENGINEERS, INC.
9360 Glacier Highway, Ste. 100
Juneau, Alaska 99801
Phone: 907-586-2093
Fax: 907-586-2099
www.pndengineers.com

DESIGN: MS CHECKED: JLD
DRAWN: WRB APPROVED: CRS
SCALE:
DATE: 2/28/14

STATE OF ALASKA — John L. DeMuth — CE-8847 — REGISTERED PROFESSIONAL ENGINEER

CITY & BOROUGH OF JUNEAU, ALASKA
AURORA HARBOR REBUILD - PHASE I
CONTRACT NO. DH 12-160

SHEET TITLE:
ANGLED TRANSITION MODULE A PLAN AND DETAILS

PND PROJECT NO.: 122055

7.01
SHEET 101 OF 143

NOTE: PROVIDE FRP GRATING IN THREE (3) SECTIONS AS SHOWN. FASTEN TO BEAMS AND STRINGERS USING S.S. HARDWARE PER MANUFACTURERS GUIDELINES.

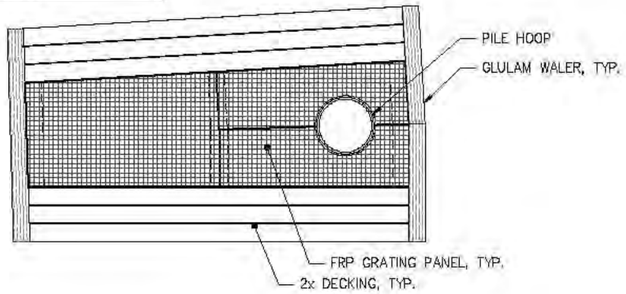

DECKING - PLAN

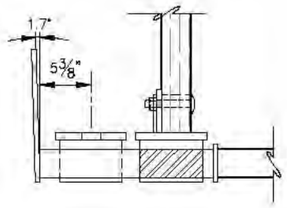

NOTE: ALL CONNECTION WELDMENT DETAILS SIMILAR TO STANDARD WITH THE NOTED EXCEPTIONS.

MODIFIED CONNECTION WELDMENT

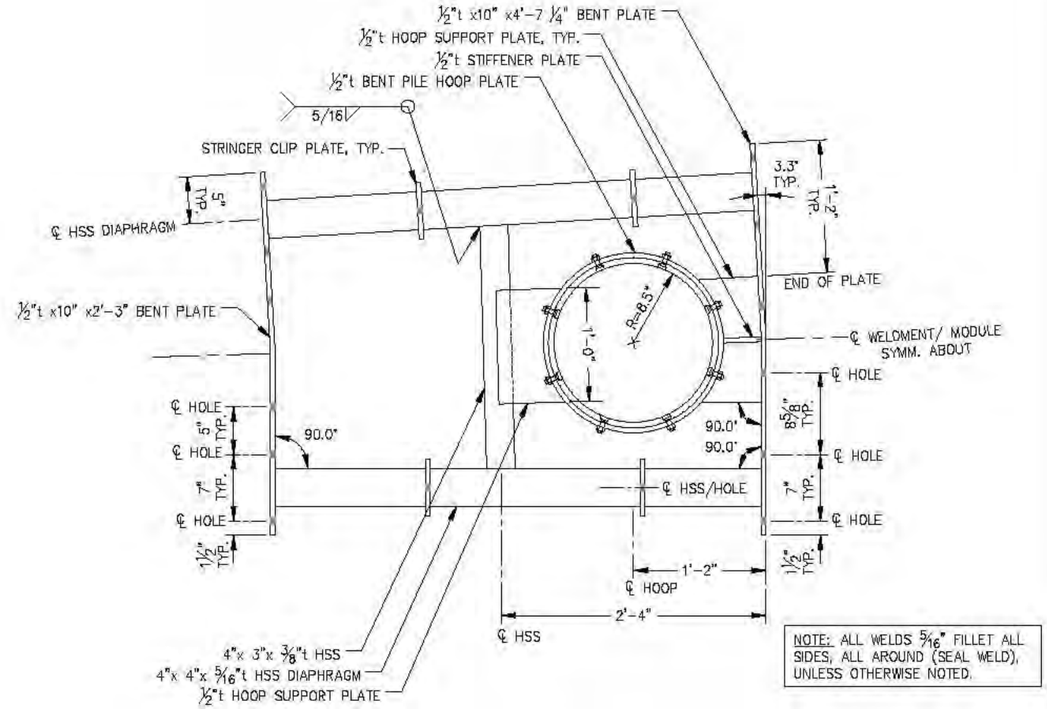

NOTE: ALL WELDS 5/16" FILLET ALL SIDES, ALL AROUND (SEAL WELD), UNLESS OTHERWISE NOTED.

PILE HOOP WELDMENT

NOTE: FOR DETAILS NOT SHOWN, REFER TO 10' FLOAT SECTION.

NOTE: INSTALL UTILITY CHASE AS SHOWN. FASTEN MITERED ENDS PER MANUFACTURER'S RECOMMENDATIONS.

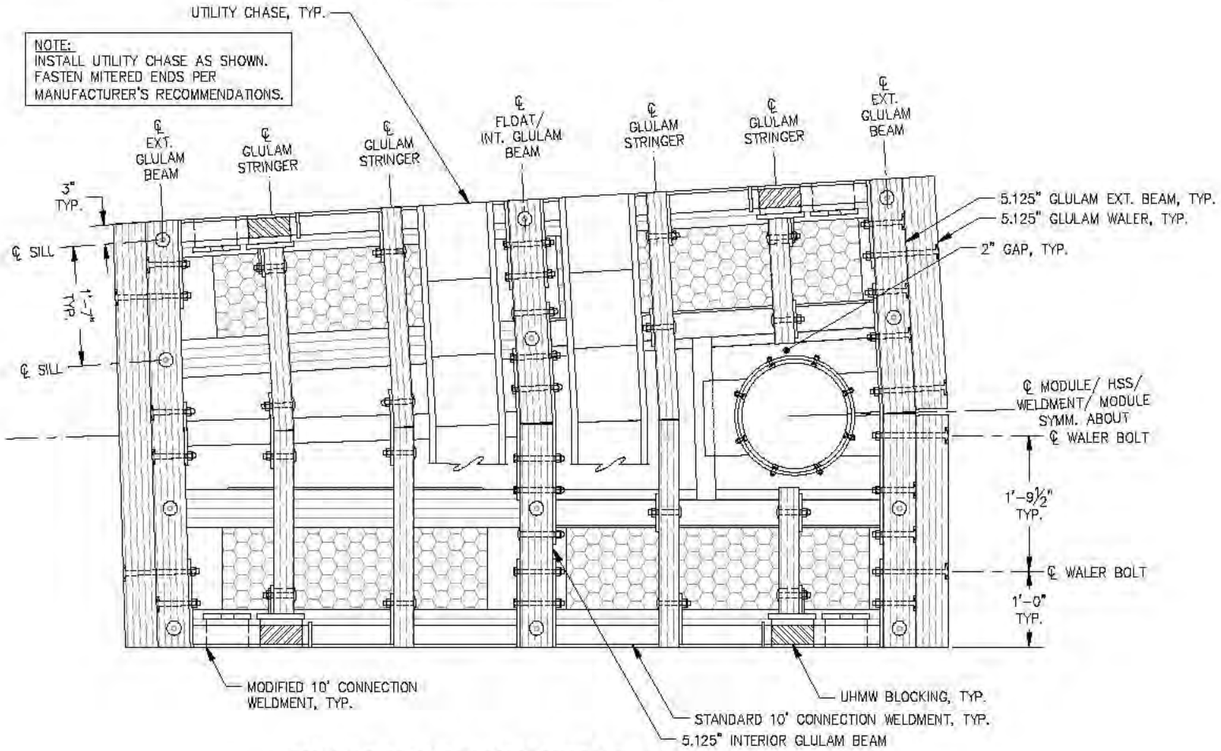

ANGLED TRANSITION MODULE B - PLAN

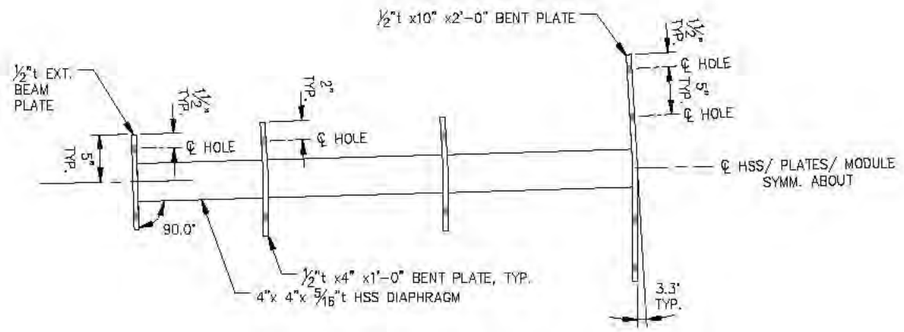

DIAPHRAGM DETAIL

REVISIONS

REV.	DATE	DESCRIPTION	DWN.	CKD.	APP.

PND ENGINEERS, INC.
9360 Glacier Highway, Ste. 100
Juneau, Alaska 99801
Phone: 907-586-2093
Fax: 907-586-2099
www.pndengineers.com

DESIGN: MS CHECKED: JLD
DRAWN: WRB APPROVED: CRS
SCALE:
DATE: 2/28/14

CITY & BOROUGH OF JUNEAU, ALASKA
AURORA HARBOR REBUILD - PHASE I
CONTRACT NO. DH 12-160

SHEET TITLE:
ANGLED TRANSITION MODULE B PLAN AND DETAILS

PND PROJECT NO.: 122055

7.02
SHEET 102 OF 143

NOTE: PROVIDE FRP GRATING IN THREE (3) SECTIONS AS SHOWN. FASTEN TO BEAMS AND STRINGERS USING S.S. HARDWARE PER MANUFACTURERS GUIDELINES.

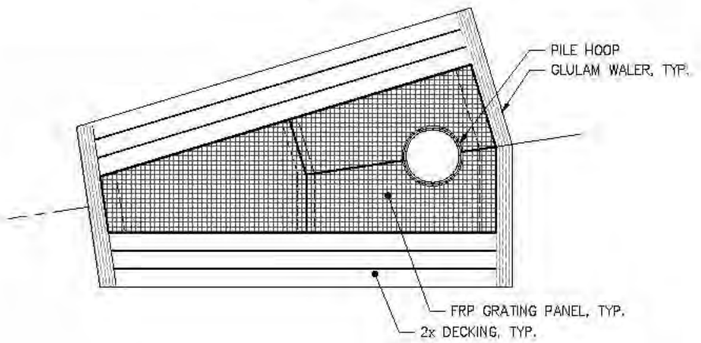

DECKING - PLAN

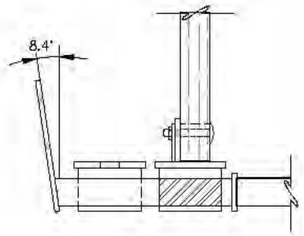

NOTE: ALL CONNECTION WELDMENT DETAILS SIMILAR TO STANDARD WITH THE NOTED EXCEPTIONS.

MODIFIED CONNECTION WELDMENT

NOTE: FOR DETAILS NOT SHOWN, REFER TO 10' FLOAT SECTION.

NOTE:
INSTALL UTILITY CHASE AS SHOWN. FASTEN MITERED ENDS PER MANUFACTURER'S RECOMMENDATIONS.

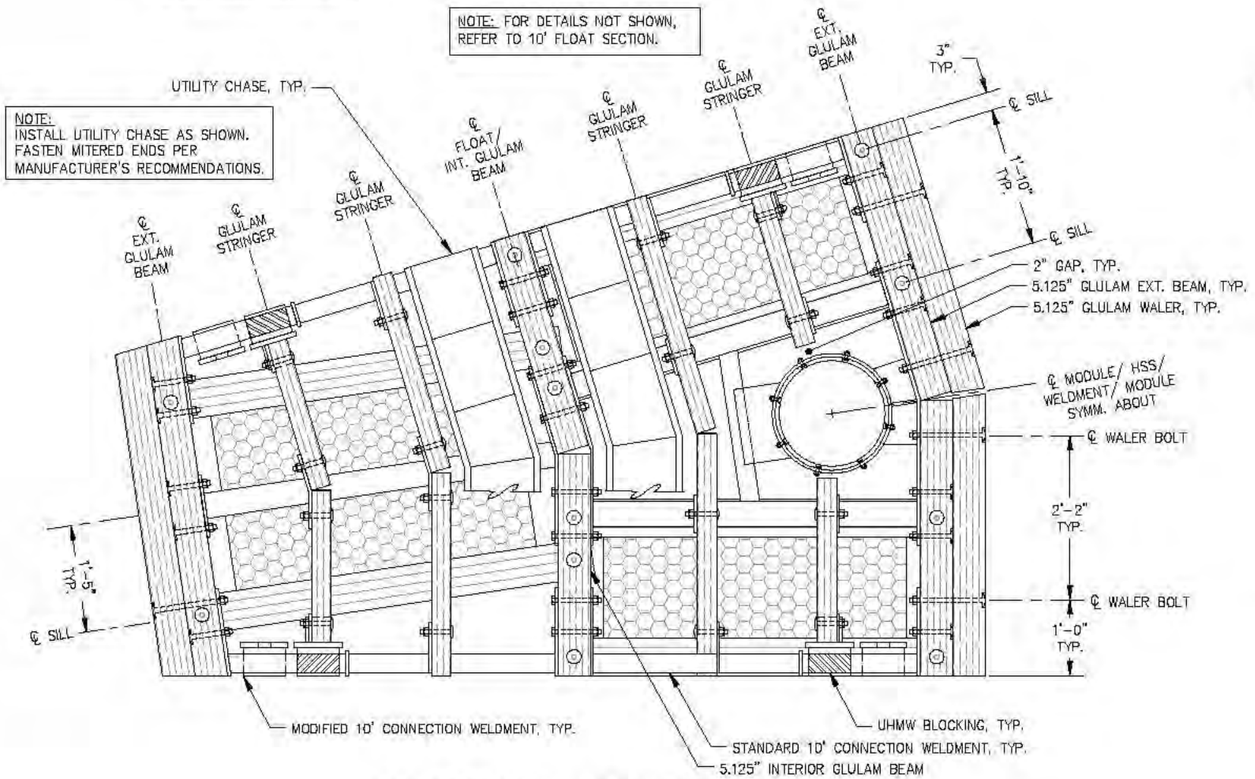

ANGLED TRANSITION MODULE C - PLAN

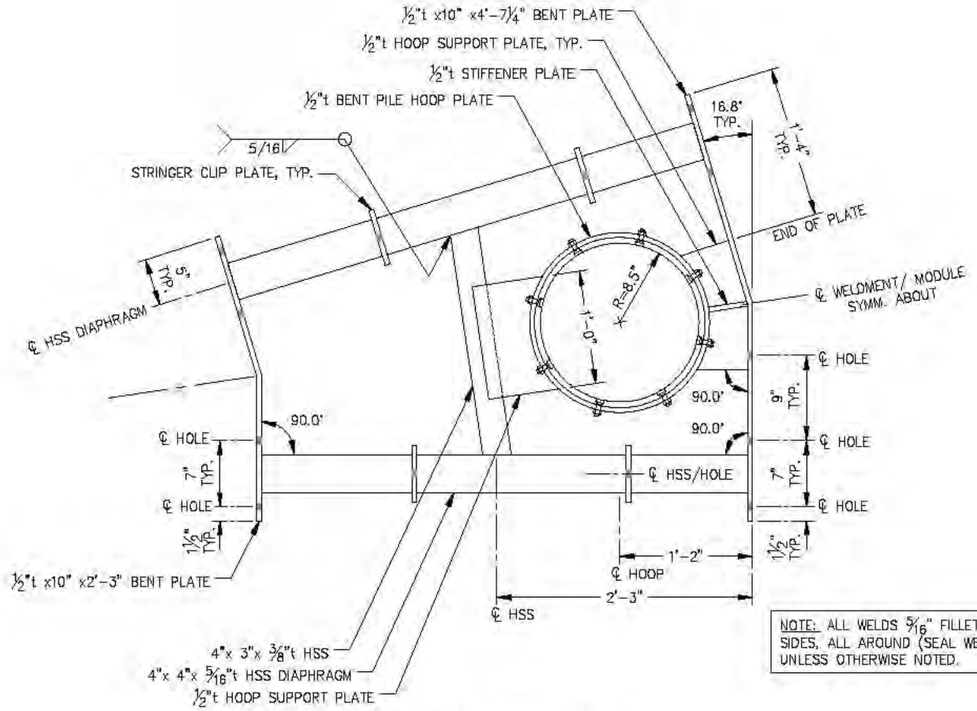

NOTE: ALL WELDS 5/16" FILLET ALL SIDES, ALL AROUND (SEAL WELD), UNLESS OTHERWISE NOTED.

PILE HOOP WELDMENT

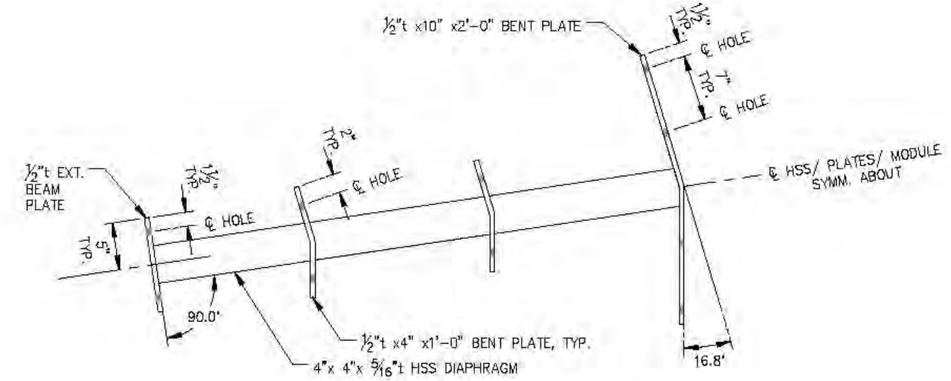

DIAPHRAGM DETAIL

REVISIONS

REV.	DATE	DESCRIPTION	DWN.	CKD.	APP.

PND ENGINEERS, INC.
9360 Glacier Highway, Ste. 100
Juneau, Alaska 99801
Phone: 907-586-2093
Fax: 907-586-2099
www.pndengineers.com

DESIGN: MS CHECKED: JLD
DRAWN: WRB APPROVED: CRS
SCALE:
DATE: 2/28/14

CITY & BOROUGH OF JUNEAU, ALASKA
AURORA HARBOR REBUILD - PHASE I
CONTRACT NO. DH 12-160

SHEET TITLE:
ANGLED TRANSITION MODULE C PLAN AND DETAILS

PND PROJECT NO.: 122055

7.03
SHEET 103 OF 143

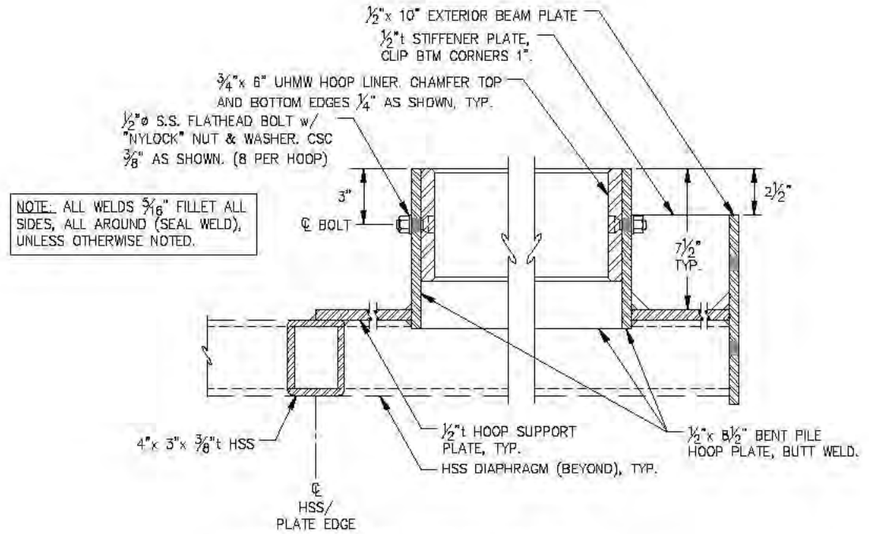

PILE HOOP WELDMENT - SECTION

REVISIONS

REV.	DATE	DESCRIPTION	DWN.	CKD.	APP.

PND ENGINEERS, INC.
9360 Glacier Highway, Ste. 100
Juneau, Alaska 99801
Phone: 907-586-2093
Fax: 907-586-2099
www.pndengineers.com

DESIGN: MS CHECKED: JLD
DRAWN: WRB APPROVED: CRS
SCALE:

STATE OF ALASKA — John L. DeMoh — CE-8847 — REGISTERED PROFESSIONAL ENGINEER
DATE: 2/28/14

CITY & BOROUGH OF JUNEAU, ALASKA
AURORA HARBOR REBUILD - PHASE I
CONTRACT NO. DH 12-160

SHEET TITLE:
ANGLED TRANSITION MODULE SECTION AND DETAILS

PND PROJECT NO.: 122055

7.04
SHEET 104 OF 143

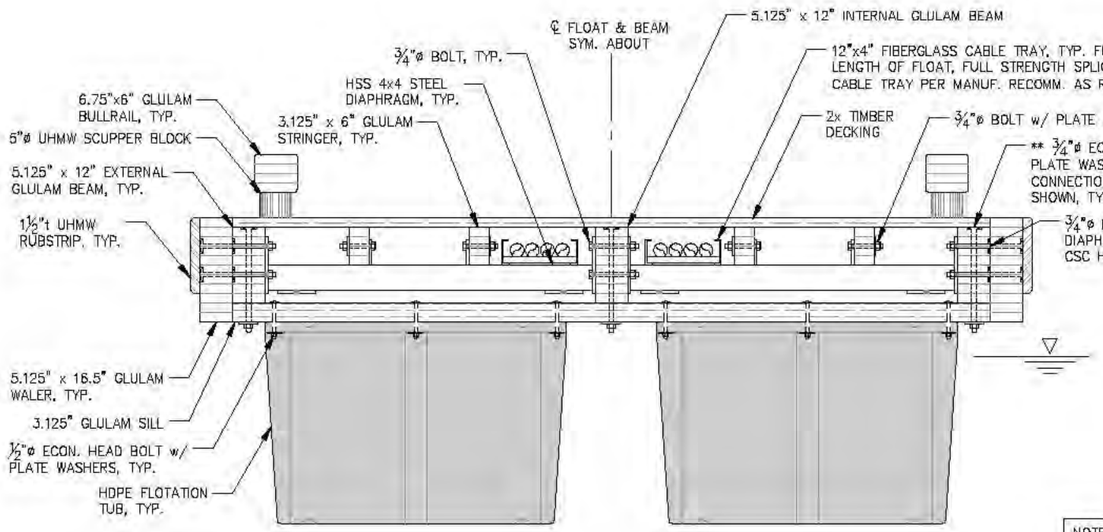

A 10' FLOAT SECTION AT FLOTATION TUBS

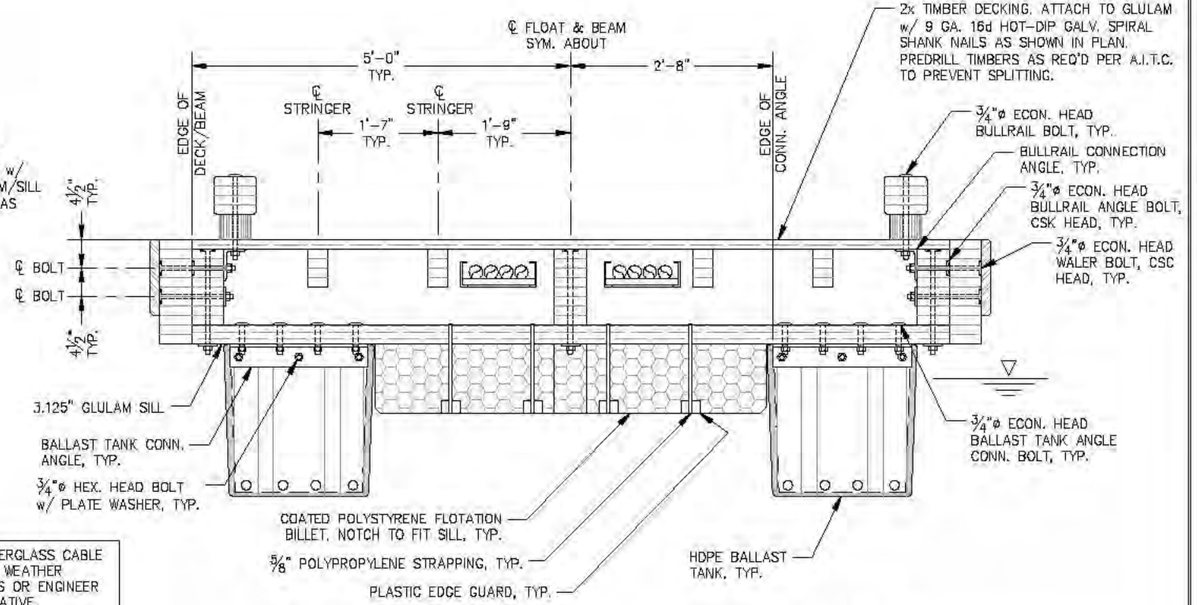

B 10' FLOAT SECTION AT FOAM BILLET / BALLAST TANK

NOTE: DETAILS NOT SHOWN SIMILAR TO SECTION A.

NOTE: SECURE FIBERGLASS CABLE TRAYS WITH UV & WEATHER RESISTANT ZIP TIES OR ENGINEER APPROVED ALTERNATIVE.

**NOTE: BEAM CSC AT ALL SILL CONNECTION BOLTS SHALL BE FILLED FLUSH w/ 3M WOOD FILLER OR APPROVED EQUAL.

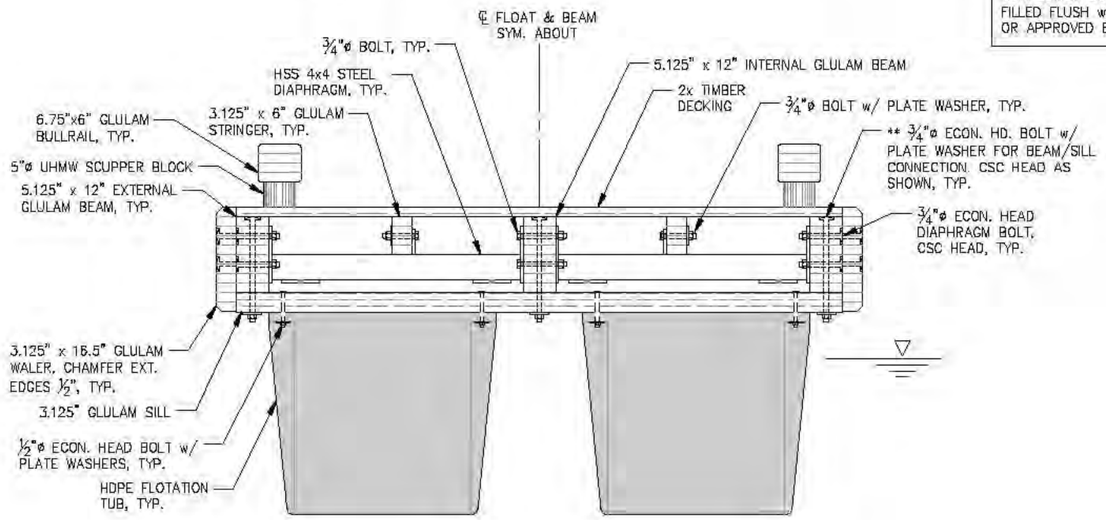

C 8' FINGER SECTION AT FLOTATION TUBS

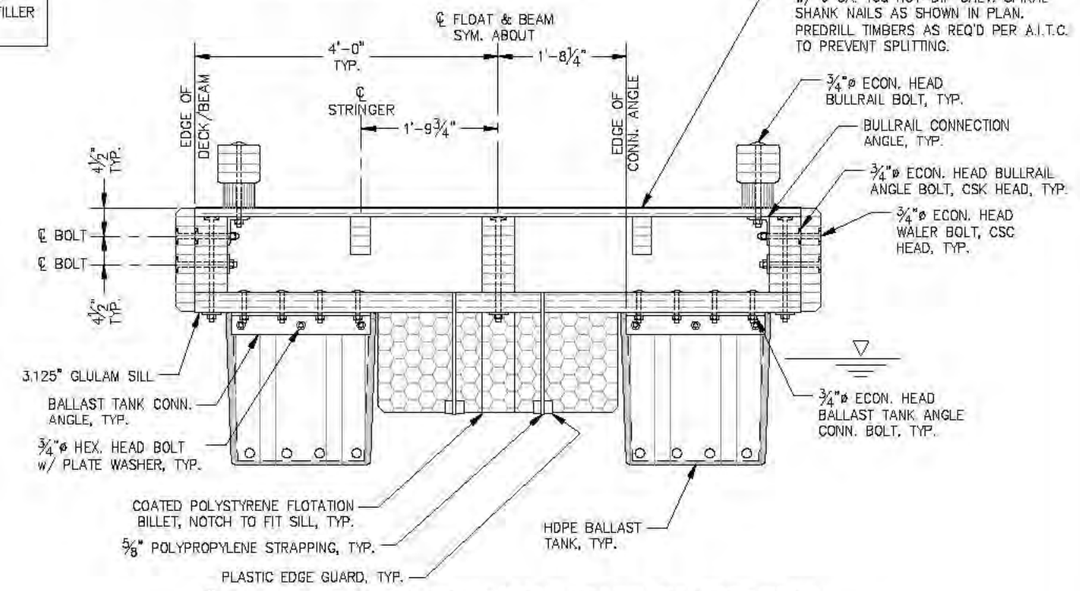

D 8' FINGER SECTION AT FOAM BILLET / BALLAST TANK

NOTE: DETAILS NOT SHOWN SIMILAR TO SECTION C.

CITY & BOROUGH OF JUNEAU DOCKS & HARBORS

REVISIONS

REV.	DATE	DESCRIPTION	DWN.	CKD.	APP.

PND ENGINEERS, INC.
9360 Glacier Highway, Ste. 100
Juneau, Alaska 99801
Phone: 907-586-2093
Fax: 907-586-2099
www.pndengineers.com

DESIGN: MS CHECKED: JLD
DRAWN: MS APPROVED: CRS
SCALE:

STATE OF ALASKA — John L. DeMuth — CE-8547 — REGISTERED PROFESSIONAL ENGINEER
DATE: 2/28/14

CITY & BOROUGH OF JUNEAU, ALASKA
AURORA HARBOR REBUILD - PHASE I
CONTRACT NO. DH 12-160

SHEET TITLE: **FLOAT UNIT SECTIONS**

PND PROJECT NO.: 122055

7.05
SHEET 105 OF 143

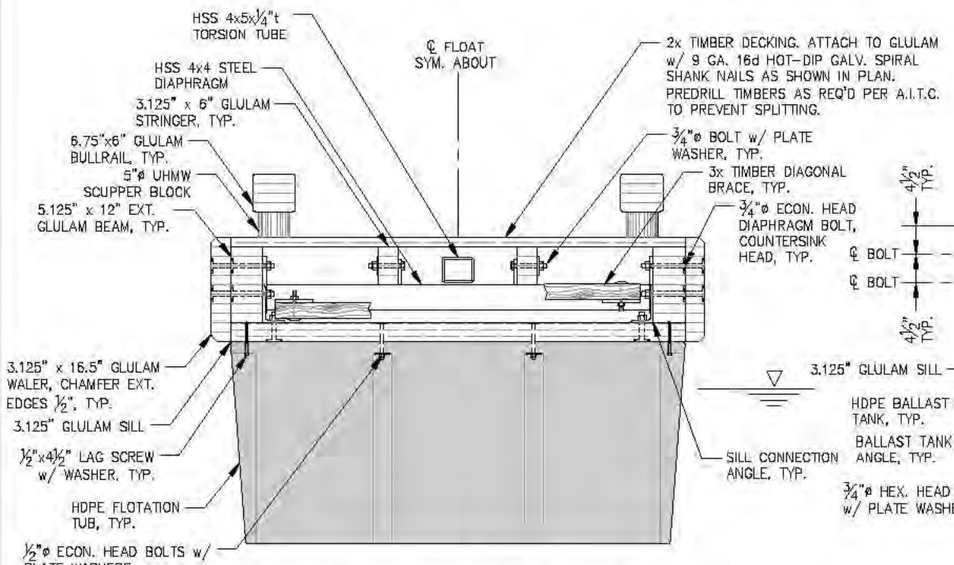

A **6' FINGER SECTION AT FLOTATION TUB**

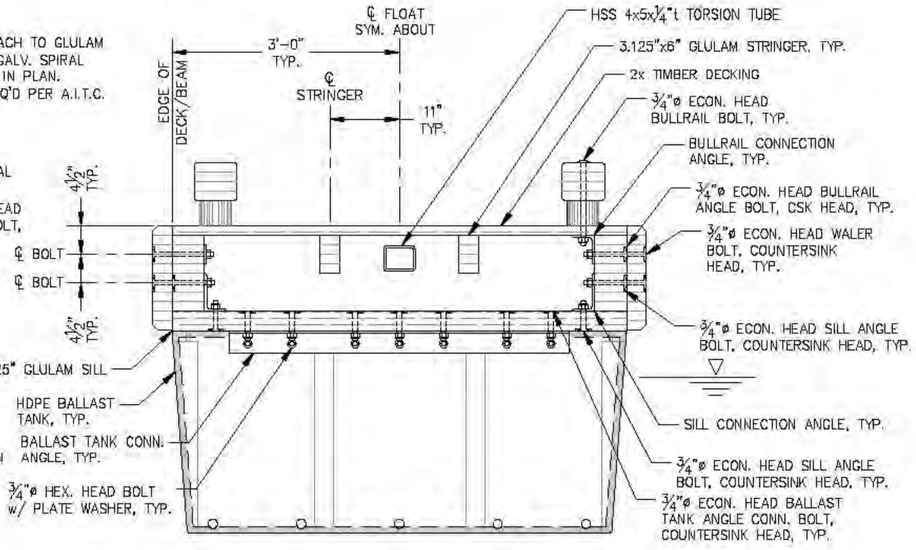

B **6' FINGER SECTION AT BALLAST TANK**
NOTE: DETAILS NOT SHOWN SIMILAR TO SECTION A.

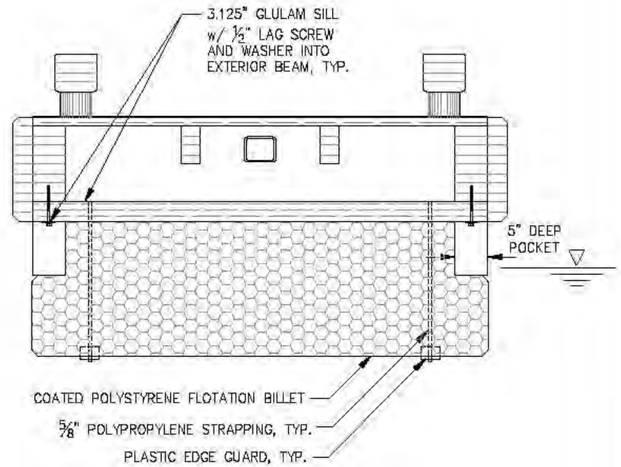

C **6' FINGER SECTION AT FLOTATION BILLET**
NOTE: DETAILS NOT SHOWN SIMILAR TO SECTION A.

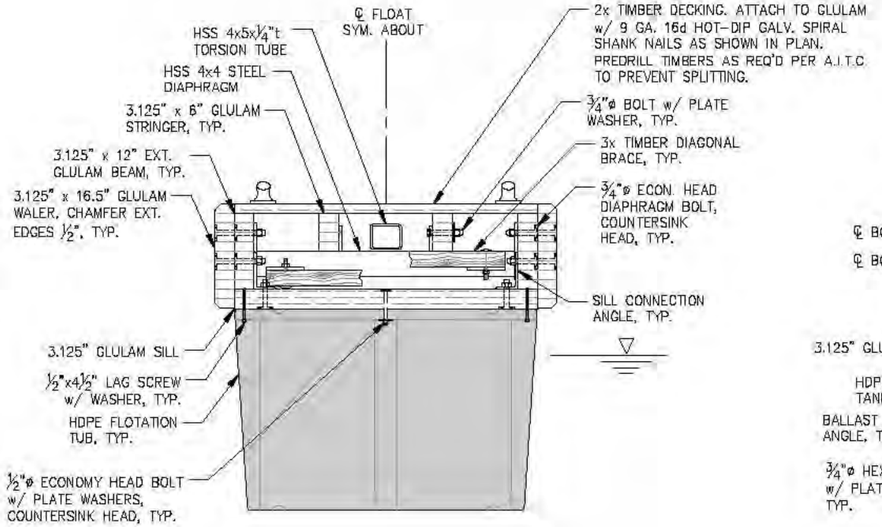

D **4' FINGER SECTION AT FLOTATION TUBS**

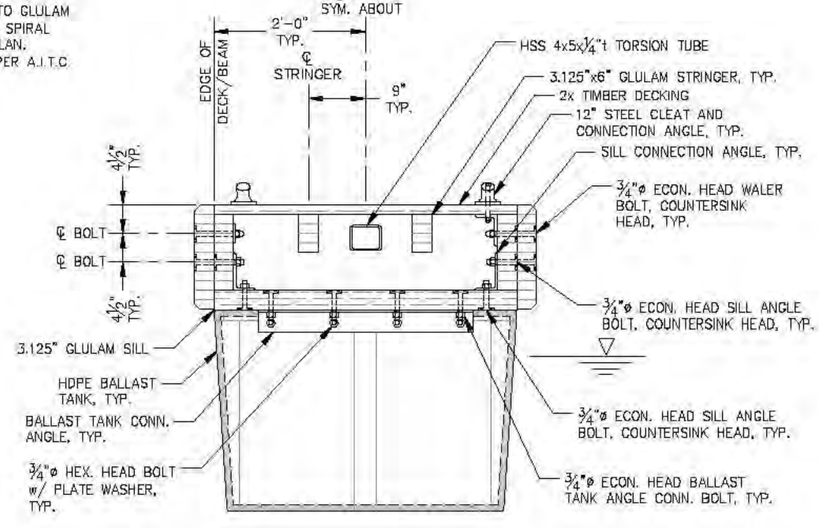

E **4' FINGER SECTION AT BALLAST TANK**
NOTE: DETAILS NOT SHOWN SIMILAR TO SECTION D.

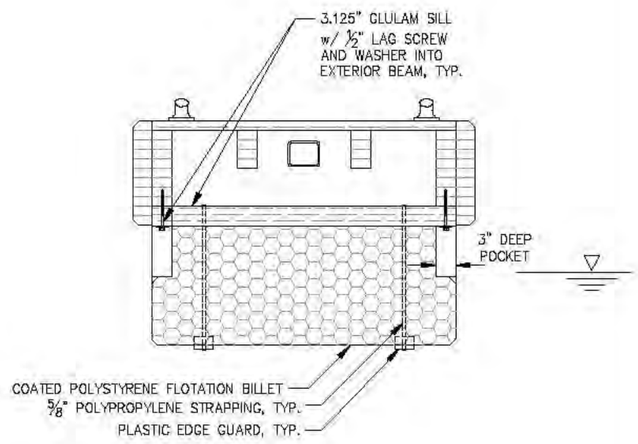

F **4' FINGER SECTION AT FLOTATION BILLET**
NOTE: DETAILS NOT SHOWN SIMILAR TO SECTION D.

CITY & BOROUGH OF JUNEAU DOCKS & HARBORS

REVISIONS

REV.	DATE	DESCRIPTION	DWN.	CKD.	APP.

PND ENGINEERS, INC.
9360 Glacier Highway, Ste. 100
Juneau, Alaska 99801
Phone: 907-586-2093
Fax: 907-586-2099
www.pndengineers.com

DESIGN: MS CHECKED: JLD
DRAWN: MS APPROVED: CRS
SCALE:
DATE: 2/28/14

STATE OF ALASKA — 49TH — John L. DeMuth CC-8847 — REGISTERED PROFESSIONAL CIVIL ENGINEER

CITY & BOROUGH OF JUNEAU, ALASKA
AURORA HARBOR REBUILD - PHASE I
CONTRACT NO. DH 12-160

SHEET TITLE:
FLOAT UNIT SECTIONS

PND PROJECT NO.: 122055

7.06
SHEET 106 OF 143

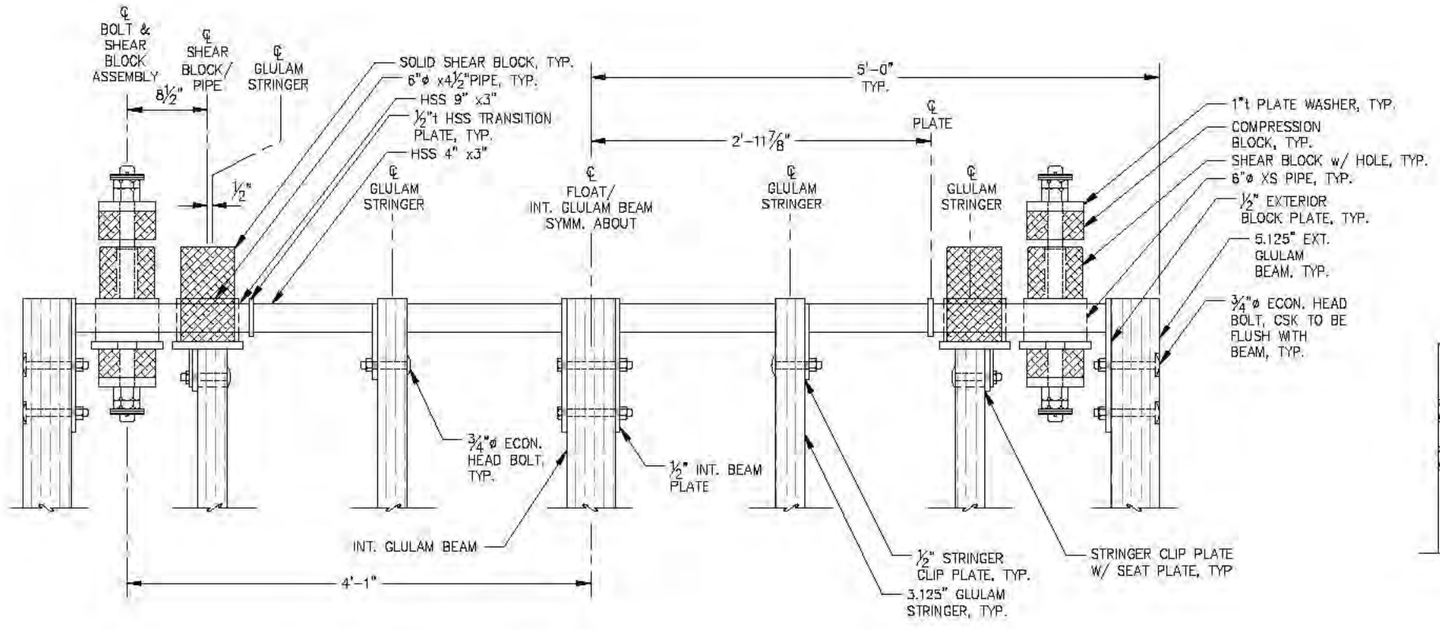

10' STANDARD CONNECTION WELDMENT PLAN

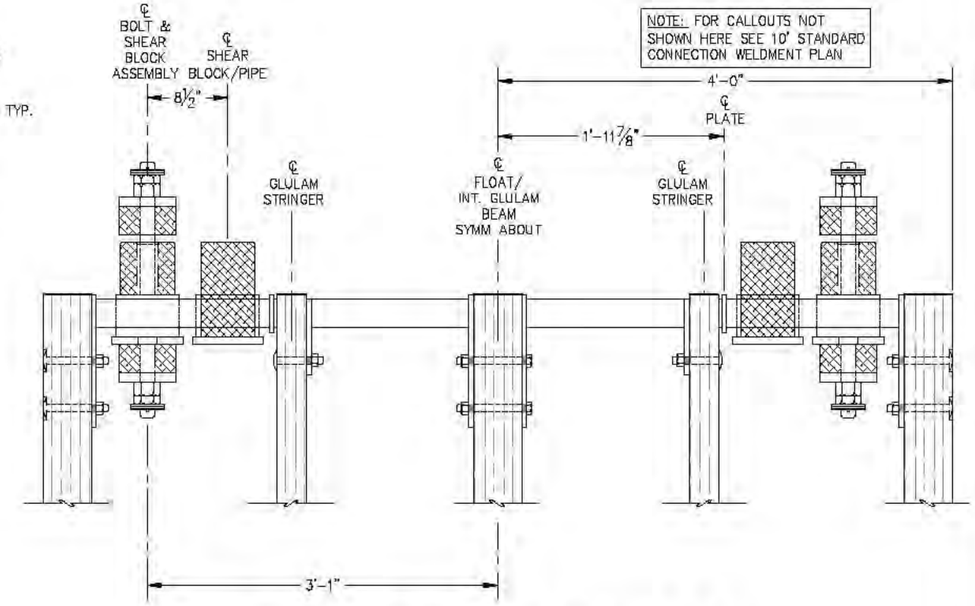

8' STANDARD CONNECTION WELDMENT PLAN

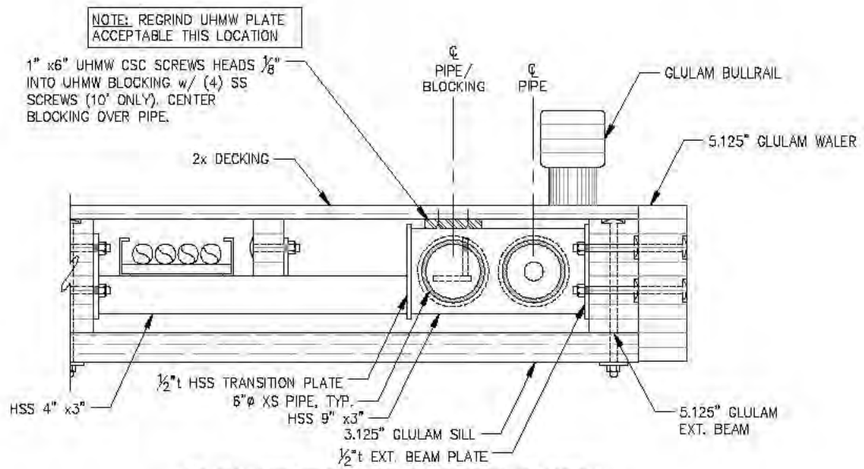

10' CONNECTION WELDMENT ELEVATION

(8' CONN. WELDMENT SIMILAR)

REVISIONS

REV.	DATE	DESCRIPTION	DWN.	CKD.	APP.

P N D ENGINEERS, INC.

9360 Glacier Highway, Ste. 100
Juneau, Alaska 99801
Phone: 907-586-2093
Fax: 907-586-2099
www.pndengineers.com

DESIGN: MS CHECKED: JLD
DRAWN: MS APPROVED: CRS
SCALE:

STATE OF ALASKA — John L. DeWath — CE-8847 — SURVEYED PROFESSIONAL ENGINEER
DATE: 2/28/14

CITY & BOROUGH OF JUNEAU, ALASKA
AURORA HARBOR REBUILD - PHASE I
CONTRACT NO. DH 12-160

SHEET TITLE: **SHEAR BLOCK CONNECTION DETAILS**

PND PROJECT NO.: 122055

7.07
SHEET 107 OF 143

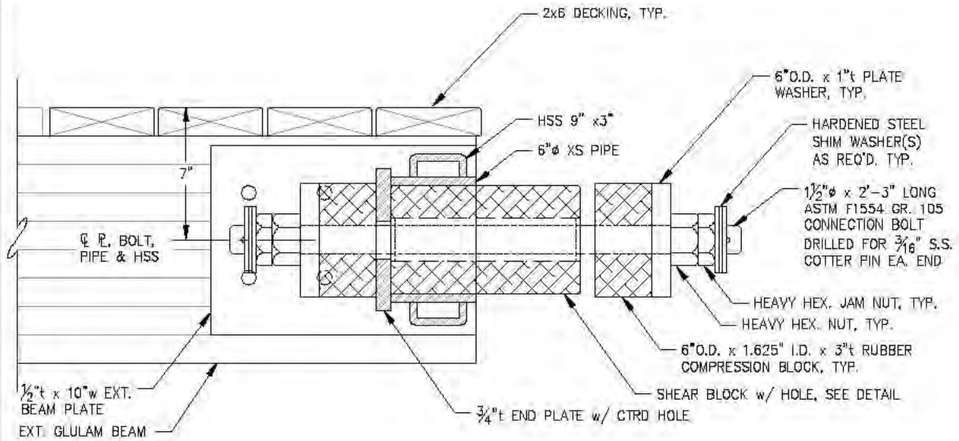

SHEAR BLOCK ASSEMBLY

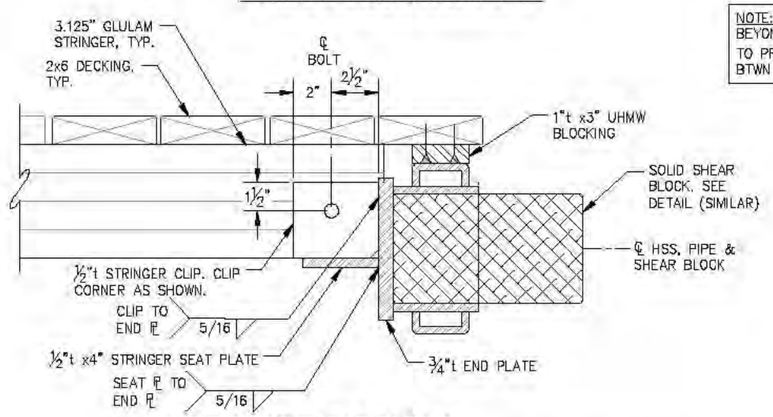

SECTION AT SHEAR BLOCK

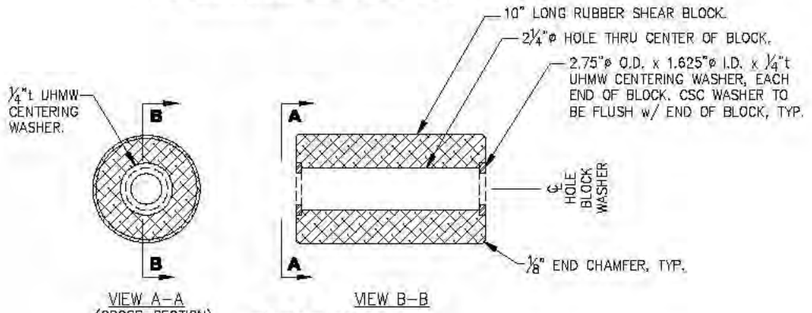

SHEAR BLOCK

NOTE:
SEE SPECIFICATIONS FOR SHEAR BLOCK FABRICATION AND FIT-UP REQUIREMENTS.

NOTE: EXTEND TIMBER DECKING BEYOND WELDMENT AS SHOWN TO PROVIDE MAX. ½" GAP BTWN ADJACENT MODULES.

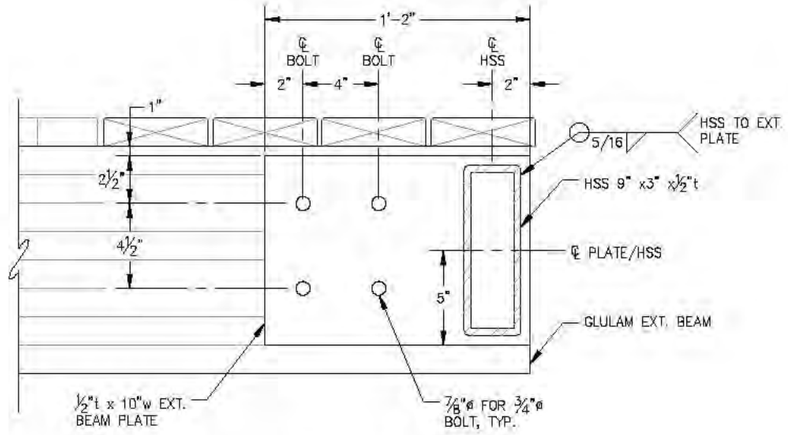

EXTERIOR BEAM PLATE

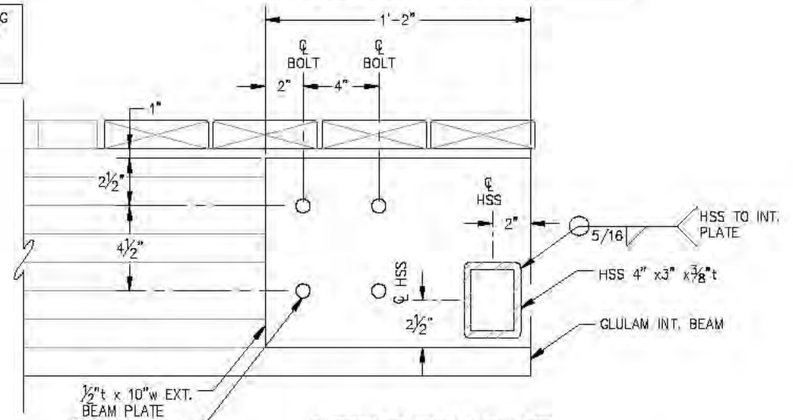

INTERIOR BEAM PLATE

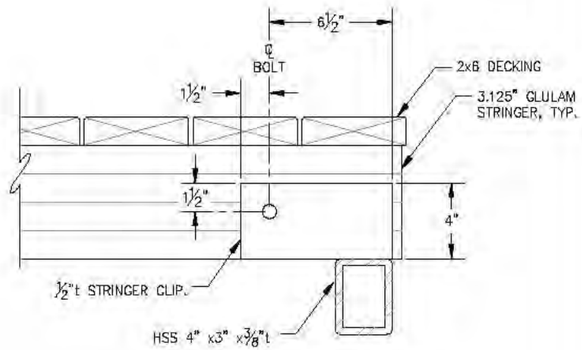

STRINGER CLIP

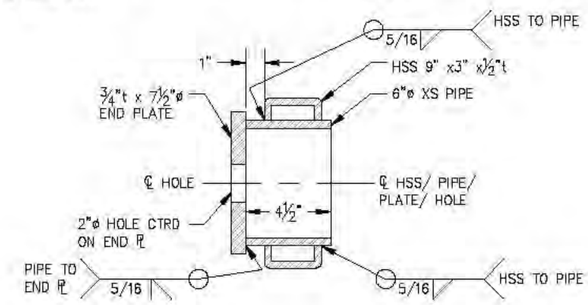

XS PIPE SECTION

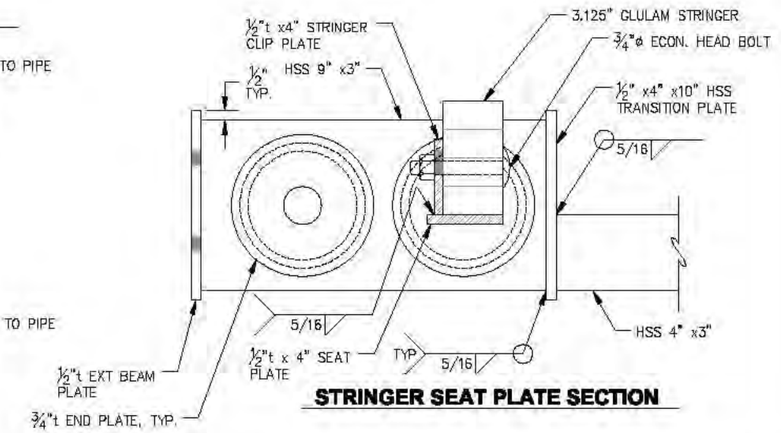

STRINGER SEAT PLATE SECTION

REVISIONS

REV.	DATE	DESCRIPTION	DWN.	CKD.	APP.

P N D ENGINEERS, INC.
9360 Glacier Highway, Ste. 100
Juneau, Alaska 99801
Phone: 907-586-2093
Fax: 907-586-2099
www.pndengineers.com

DESIGN: MS CHECKED: JLD
DRAWN: WRB APPROVED: CRS
SCALE:
DATE: 2/28/14

STATE OF ALASKA — John L. DeWitt — CE-8847 — REGISTERED PROFESSIONAL ENGINEER

CITY & BOROUGH OF JUNEAU, ALASKA
AURORA HARBOR REBUILD - PHASE I
CONTRACT NO. DH 12-160

SHEET TITLE: **SHEAR BLOCK CONNECTION DETAILS**
PND PROJECT NO.: 122055

7.08
SHEET 108 OF 143

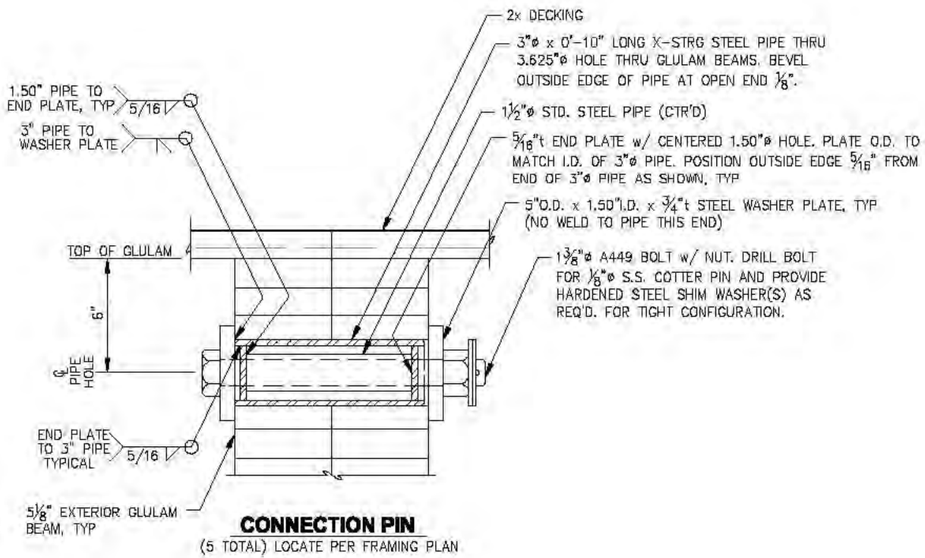

CONNECTION PIN
(5 TOTAL) LOCATE PER FRAMING PLAN

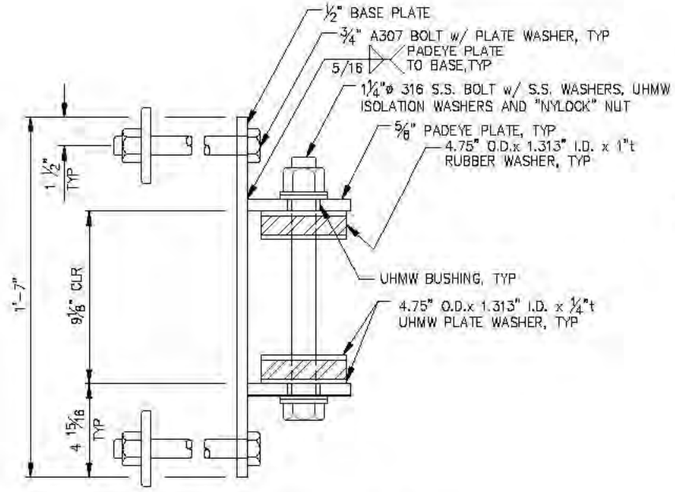

PIPE HINGE CONNECTION - PLAN
(ELECTRICAL SUBSTATION FLOAT)

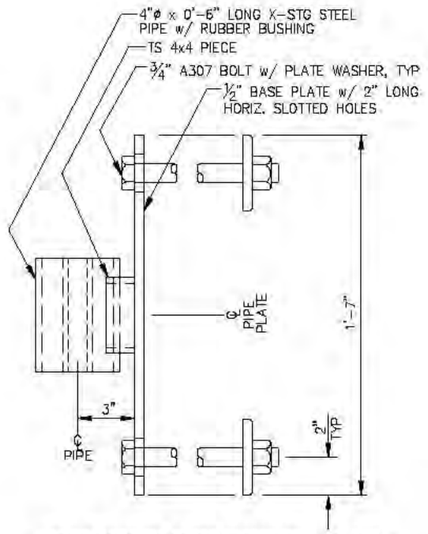

PIPE HINGE CONNECTION - PLAN
(ELECTRICAL SUBSTATION FLOAT)

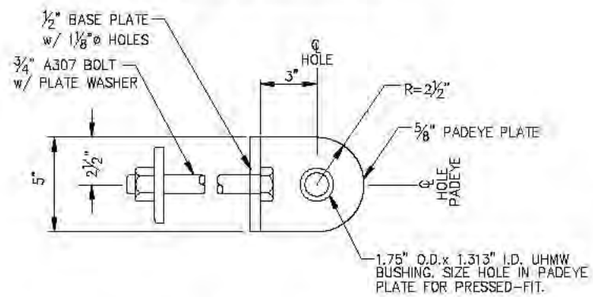

PIPE HINGE CONNECTION - ELEVATION
(ELECTRICAL SUBSTATION FLOAT)

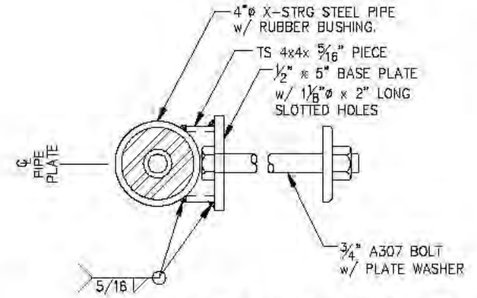

PIPE HINGE CONNECTION - ELEVATION
(ELECTRICAL SUBSTATION FLOAT)

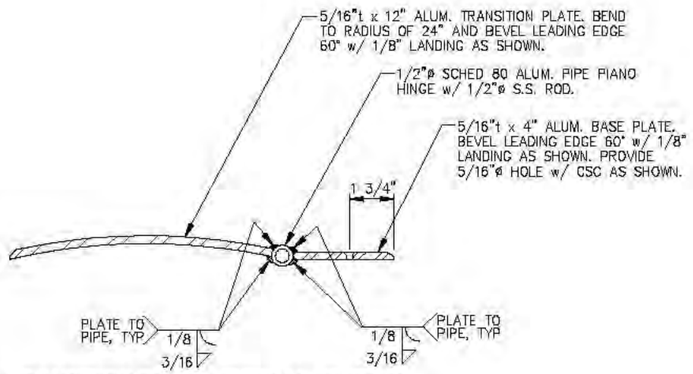

TRANSITION PLATE - TYPICAL SECTION

NOTE: ALL PLATE SHALL BE ALUMINUM DIAMOND PLATE w/ FLAME-SPRAYED TEXTURE PER SPECIFICATIONS.

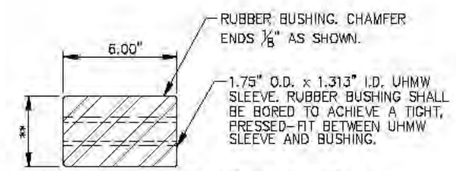

****NOTE:** INITIAL FABRICATION DIAMETER SHALL BE 3.85" MIN. TO 3.90" MAX. SEE SPECIFICATIONS FOR FINAL DIAMETER AND FIT-UP REQMT'S.

TYPICAL PIPE HINGE RUBBER BUSHING

REVISIONS

REV.	DATE	DESCRIPTION	DWN.	CKD.	APP.

P N D ENGINEERS, INC.
9360 Glacier Highway, Ste. 100
Juneau, Alaska 99801
Phone: 907-586-2093
Fax: 907-586-2099
www.pndengineers.com

DESIGN: MS CHECKED: JLD
DRAWN: WRB APPROVED: CRS
SCALE:

STATE OF ALASKA — John L. Dahlin — CE-8847 — REGISTERED PROFESSIONAL ENGINEER
DATE: 2/28/14

CITY & BOROUGH OF JUNEAU, ALASKA
AURORA HARBOR REBUILD - PHASE I
CONTRACT NO. DH 12-160

SHEET TITLE: **MISCELLANEOUS CONNECTION DETAILS**

PND PROJECT NO.: 122055

7.09
SHEET 109 OF 143

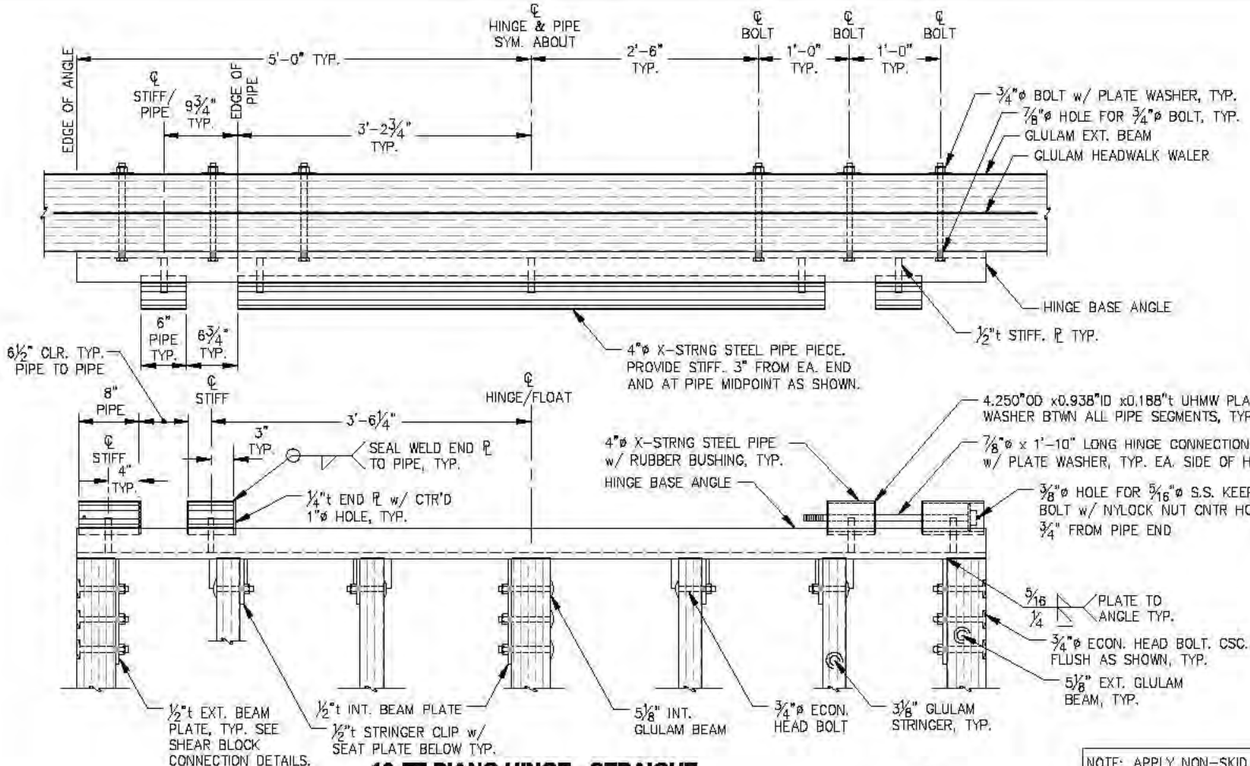

10-FT PIANO HINGE - STRAIGHT

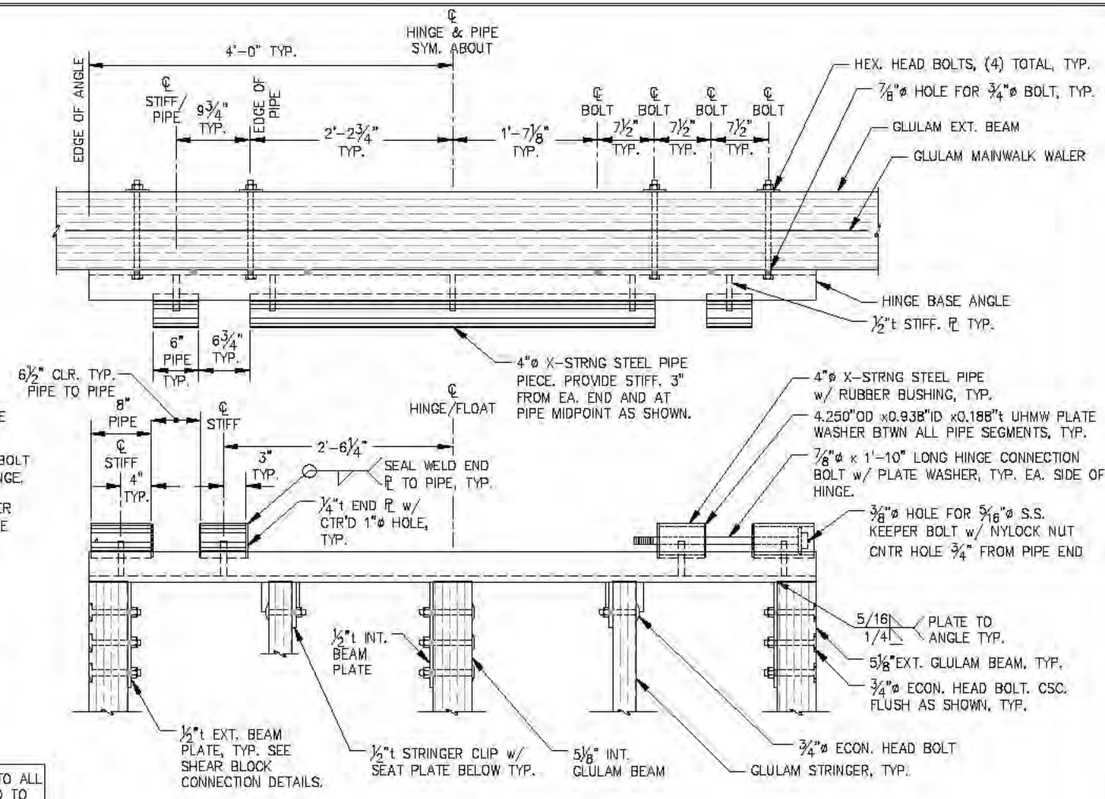

8-FT PIANO HINGE - STRAIGHT

NOTE: APPLY NON-SKID TO ALL HINGE SURFACES EXPOSED TO FOOT TRAFFIC, INCLUDING BASE ANGLES AND PIPE SEGMENTS

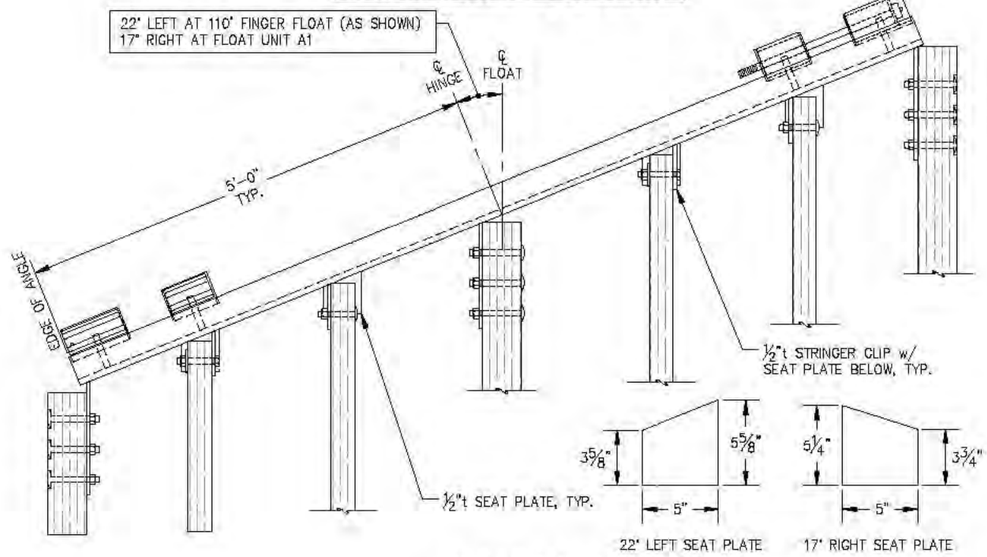

10-FT PIANO HINGE - ANGLED

NOTE: ANGLED HINGE DIMENSIONS AND CALLOUTS NOT SHOWN SIMILAR TO PIANO HINGE – STRAIGHT.

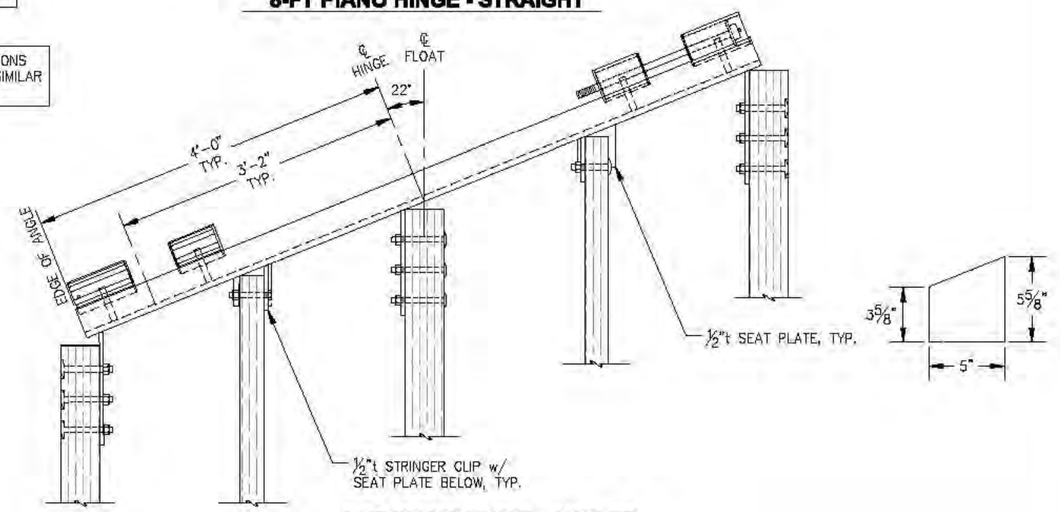

8-FT PIANO HINGE - ANGLED

REVISIONS

REV.	DATE	DESCRIPTION	DWN.	CKD.	APP.

P N D ENGINEERS, INC.
9360 Glacier Highway, Ste. 100
Juneau, Alaska 99801
Phone: 907-586-2093
Fax: 907-586-2099
www.pndengineers.com

DESIGN: MS CHECKED: JLD
DRAWN: WRB APPROVED: CRS
SCALE:
DATE: 2/28/14

STATE OF ALASKA — John L. Dalrymple — CE-8847 — REGISTERED PROFESSIONAL ENGINEER

CITY & BOROUGH OF JUNEAU, ALASKA
AURORA HARBOR REBUILD - PHASE I
CONTRACT NO. DH 12-160

SHEET TITLE: PIANO HINGE DETAILS

PND PROJECT NO.: 122055

7.10
SHEET 110 OF 143

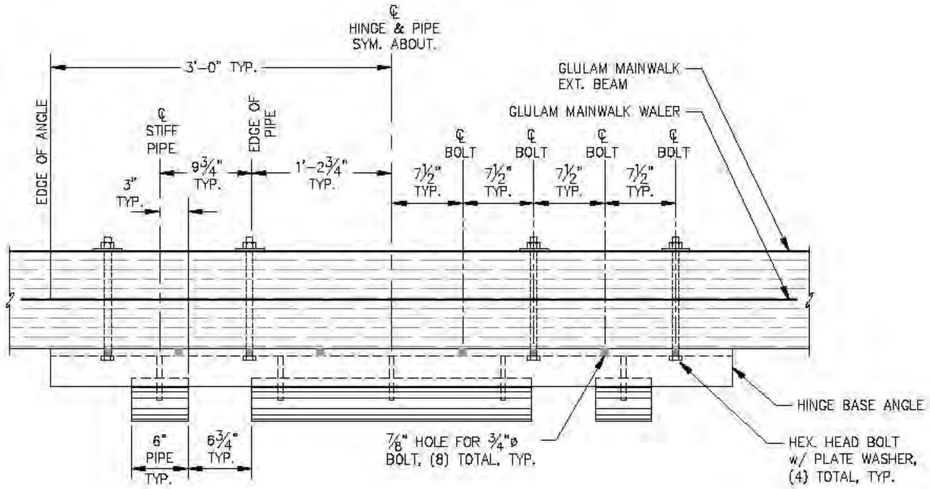

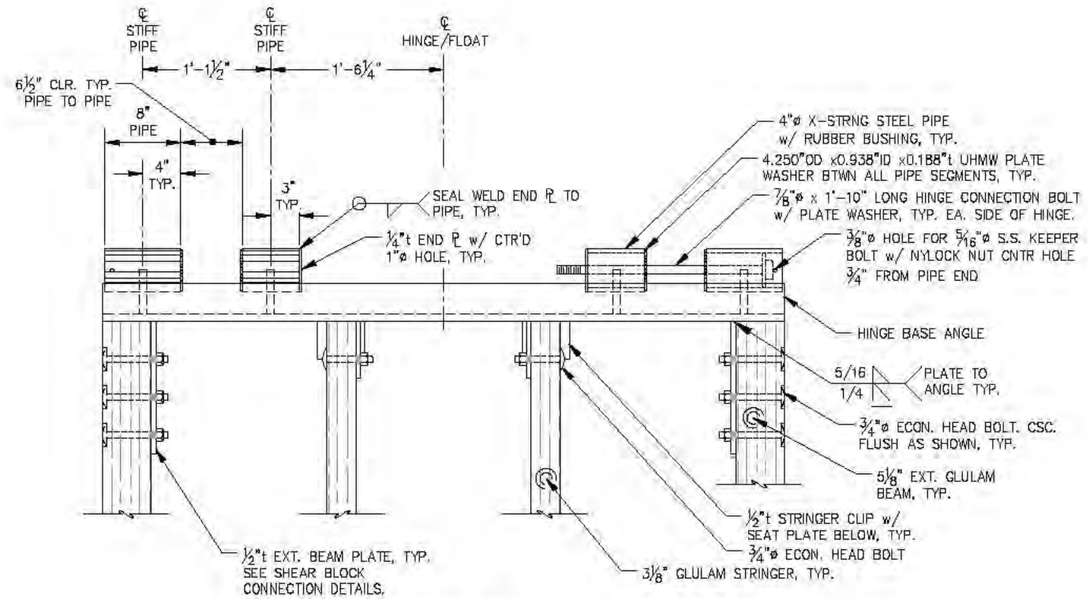

6-FT PIANO HINGE

NOTE: DETAILS NOT SHOWN ON THIS SHEET ARE SIMILAR TO 10-FT PIANO HINGE.

NOTE: HINGES ARE SHOWN WITH 6-8 HOLES TO ALLOW FOR FLEXIBILITY IN AVOIDING OBSTRUCTIONS DURING INSTALLATION.

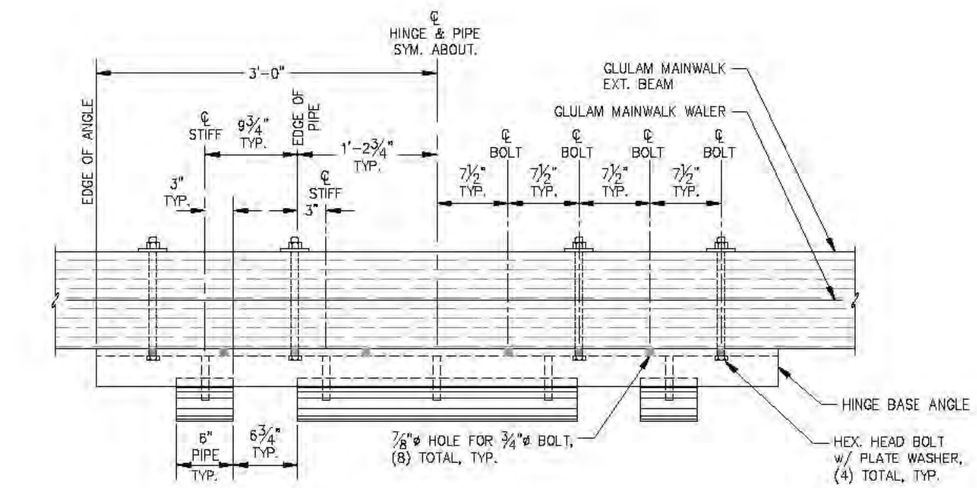

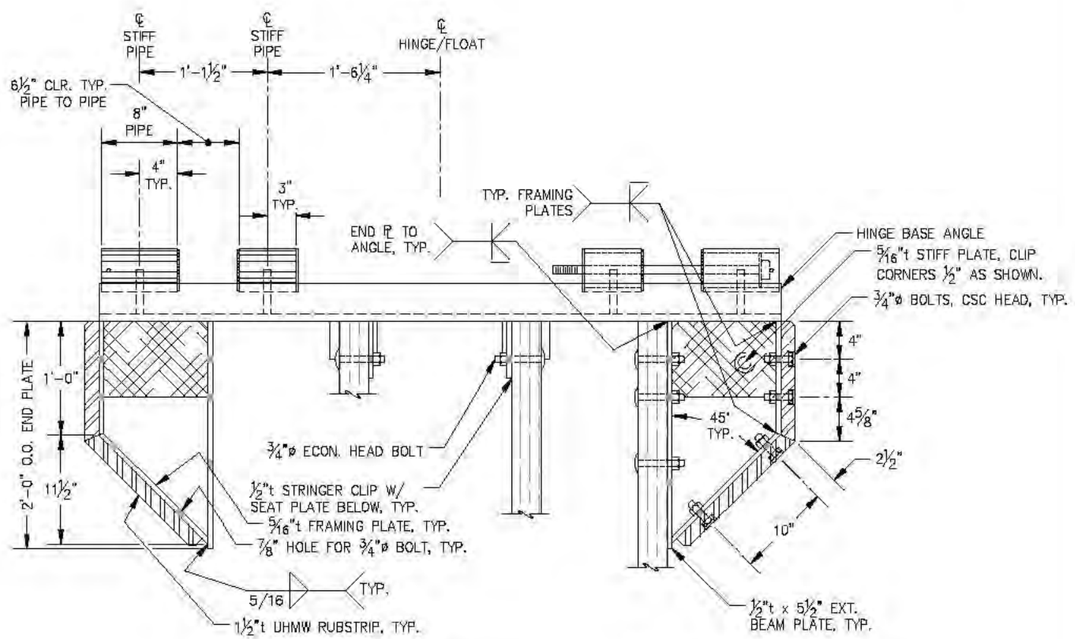

4-FT HINGE WELDMENT

NOTE: END PLATE HOLE SPACING AND LOCATION SHOWN ON GLULAM BEAM SECTION FOR 4-FT PIANO HINGE DETAILS.

RUBSTRIP BOLTS SHOWN ONE SIDE ONLY FOR CLARITY.

REVISIONS

REV.	DATE	DESCRIPTION	DWN.	CKD.	APP.

P N D ENGINEERS, INC.
9360 Glacier Highway, Ste. 100
Juneau, Alaska 99801
Phone: 907-586-2093
Fax: 907-586-2099
www.pndengineers.com

DESIGN: MS CHECKED: JLD
DRAWN: WRB APPROVED: CRS
SCALE:

STATE OF ALASKA — John L. DeWath — CE-8847 — REGISTERED PROFESSIONAL ENGINEER
DATE: 2/28/14

CITY & BOROUGH OF JUNEAU, ALASKA
AURORA HARBOR REBUILD - PHASE I
CONTRACT NO. DH 12-160

SHEET TITLE: PIANO HINGE DETAILS

PND PROJECT NO.: 122055

7.11
SHEET 111 OF 143

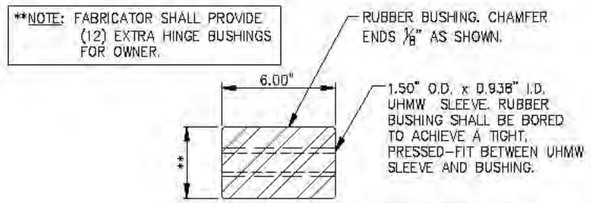

TYPICAL HINGE BUSHING

(BUSHINGS TYPICAL ALL HINGE PIPE SEGMENTS)

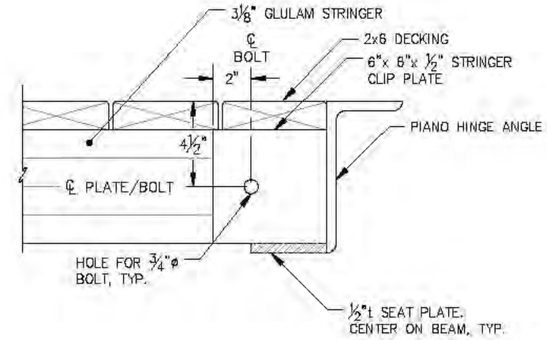

SECTION AT STRINGER CLIP w/ SEAT PLATE

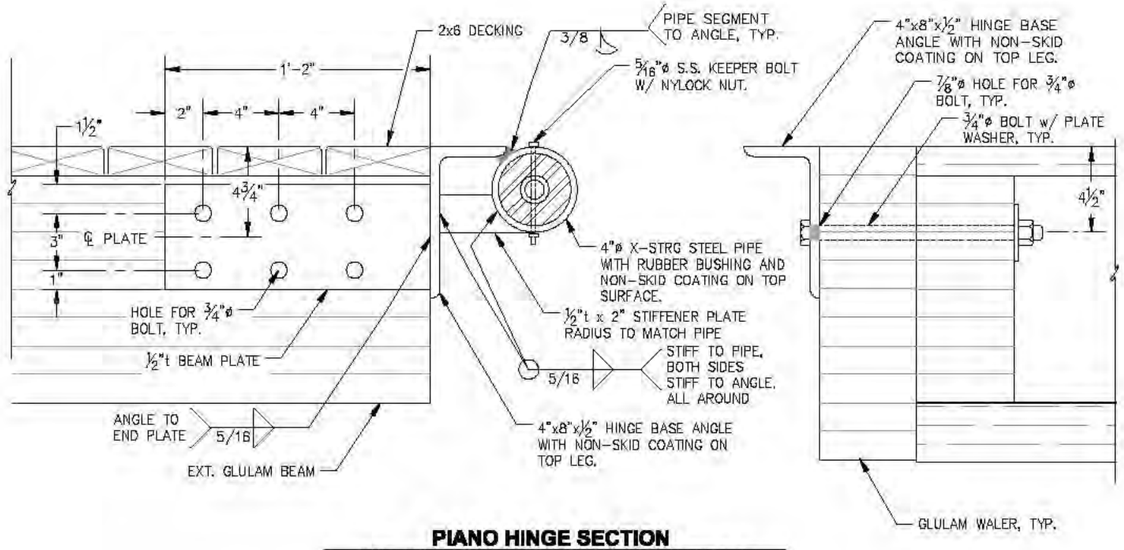

PIANO HINGE SECTION

NOTE: HINGE HALVES SEPARATED FOR CLARITY, SEE PLAN

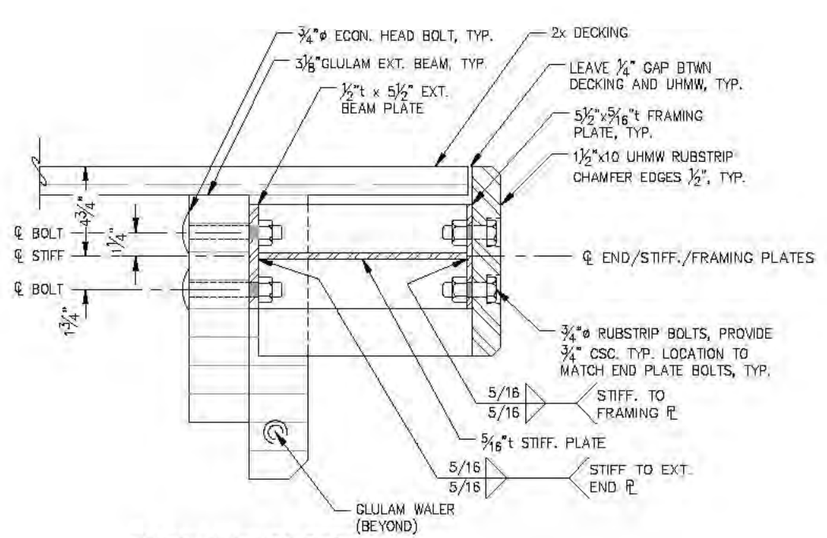

PARTIAL HINGE SECTION

4' WIDE FINGERS ONLY

REVISIONS

REV.	DATE	DESCRIPTION	DWN.	CKD.	APP.

PND ENGINEERS, INC.
9360 Glacier Highway, Ste. 100
Juneau, Alaska 99801
Phone: 907-586-2093
Fax: 907-586-2099
www.pndengineers.com

DESIGN: MS CHECKED: JLD
DRAWN: WRB APPROVED: CRS
SCALE:

STATE OF ALASKA — REGISTERED PROFESSIONAL ENGINEER — John L. DeMuth CE-8847
DATE: 2/28/14

CITY & BOROUGH OF JUNEAU, ALASKA
AURORA HARBOR REBUILD - PHASE I
CONTRACT NO. DH 12-160

SHEET TITLE: **PIANO HINGE DETAILS**

PND PROJECT NO.: 122055

7.12
SHEET 112 OF 143

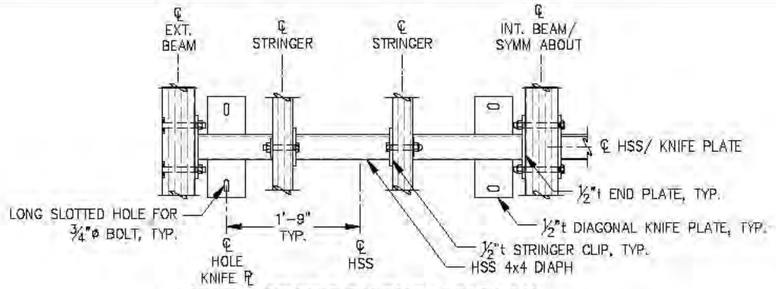

10' FLOAT HSS DIAPHRAGM PLAN

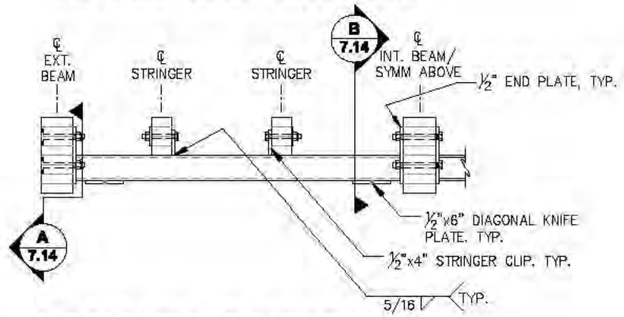

10' FLOAT HSS DIAPHRAGM ELEVATION

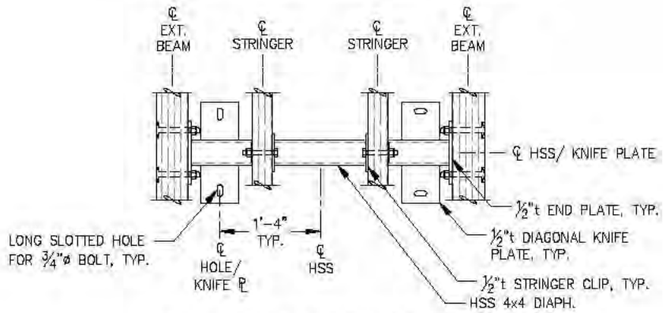

4' FLOAT HSS DIAPHRAGM PLAN

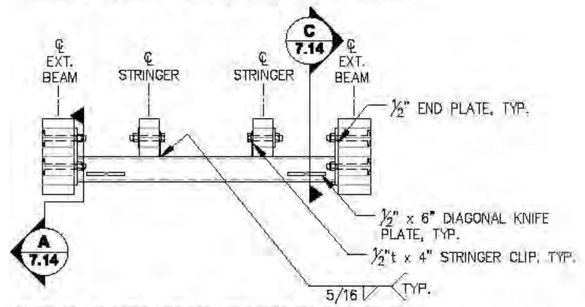

4' FLOAT HSS DIAPHRAGM ELEVATION

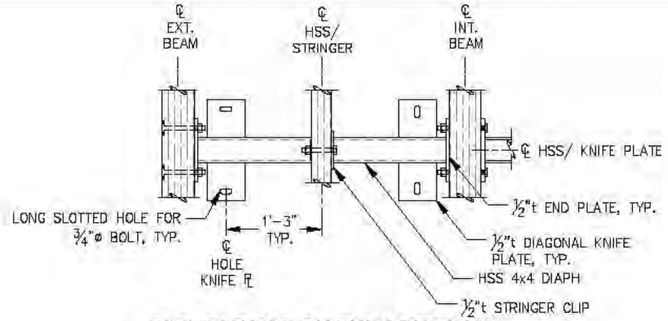

8' FLOAT HSS DIAPHRAGM PLAN

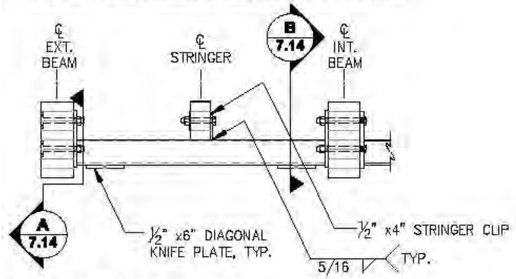

8' FLOAT HSS DIAPHRAGM ELEVATION

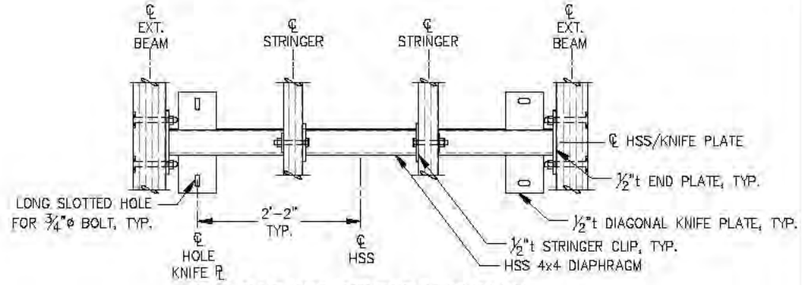

8' FLOAT HSS DIAPHRAGM PLAN

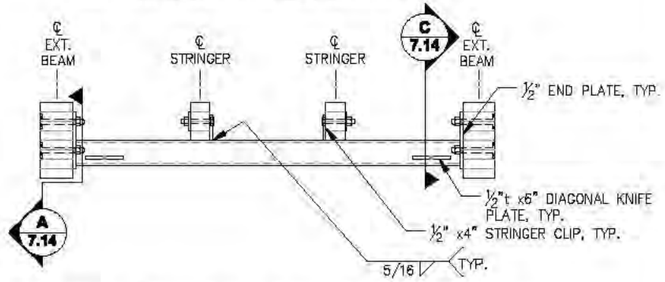

6' FLOAT FLOAT HSS DIAPHRAGM ELEVATION

NOTE:
ALL DIAPHRAGM WELDS TO BE 5/16" FILLET ALL AROUND UNLESS OTHERWISE NOTED.

NOTE:
DETAILS NOT SHOWN SIMILAR TO 10ft FLOAT.

REVISIONS

REV.	DATE	DESCRIPTION	DWN.	CKD.	APP.

P N D ENGINEERS, INC.
9360 Glacier Highway, Ste. 100
Juneau, Alaska 99801
Phone: 907-586-2093
Fax: 907-586-2099
www.pndengineers.com

DESIGN: MS CHECKED: JLD
DRAWN: WRB APPROVED: CRS
SCALE:
DATE: 2/28/14

CITY & BOROUGH OF JUNEAU, ALASKA
AURORA HARBOR REBUILD - PHASE I
CONTRACT NO. DH 12-160

SHEET TITLE: DIAPHRAGM DETAILS

PND PROJECT NO.: 122055

7.13
SHEET 113 OF 143

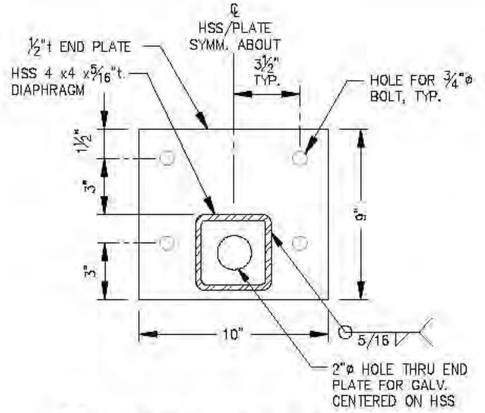

A - DIAPHRAGM END PLATE

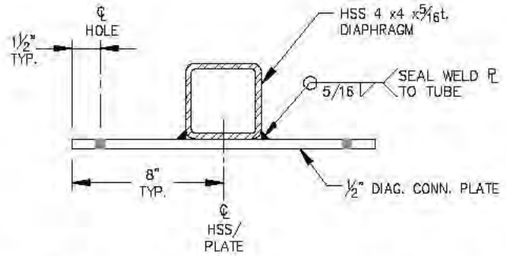

B - DIAPHRAGM SECTION AT DIAG. CONN. PLATE

(TYPICAL FOR 10' FLOATS AND 8' FINGERS)

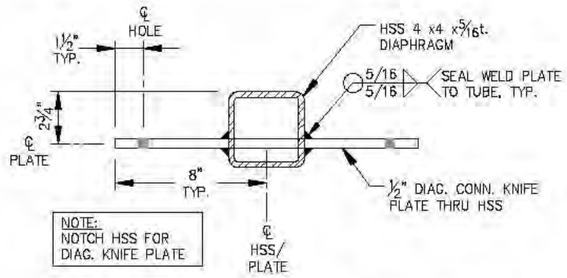

C - DIAPHRAGM SECTION AT KNIFE PLATE

(TYPICAL FOR 6', 4' FINGERS)

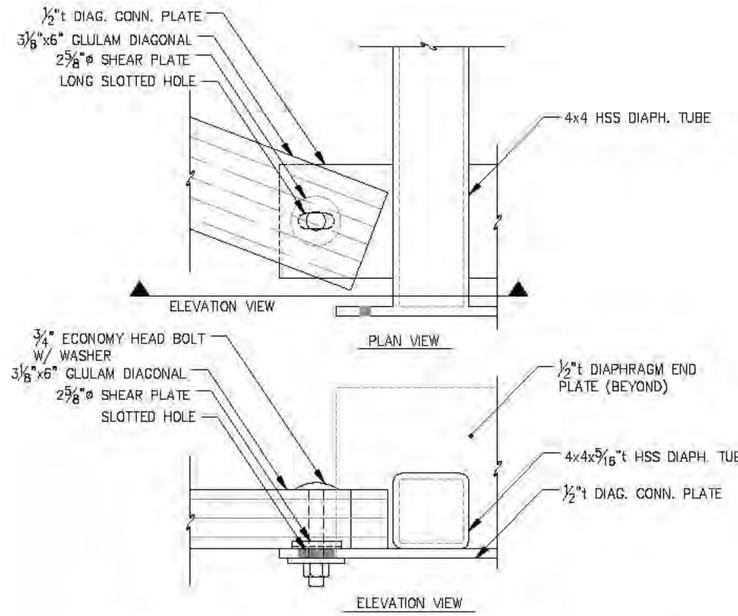

DIAPHRAGM - DIAGONAL BRACING CONNECTION DETAIL

(TYPICAL FOR 10' FLOATS AND 8' FINGERS)

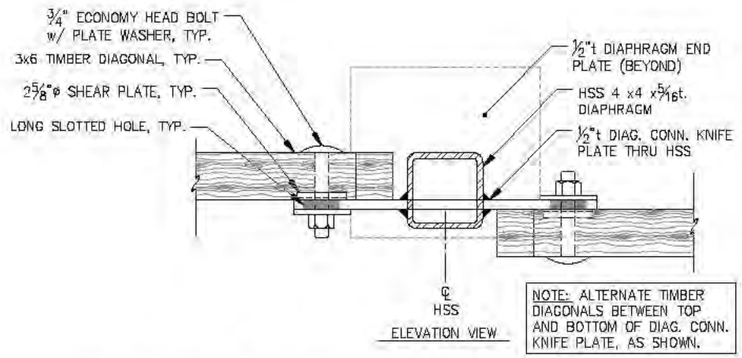

DIAPHRAGM - DIAGONAL BRACING CONNECTION DETAIL

(TYPICAL FOR 6', 4' FINGERS)

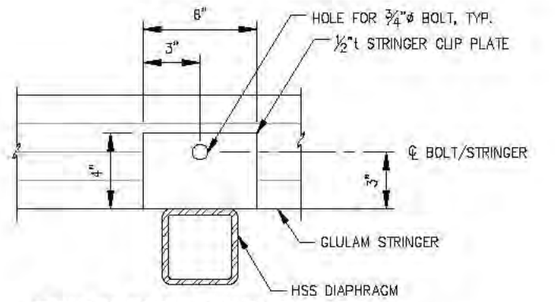

TYPICAL STRINGER CLIP PLATE

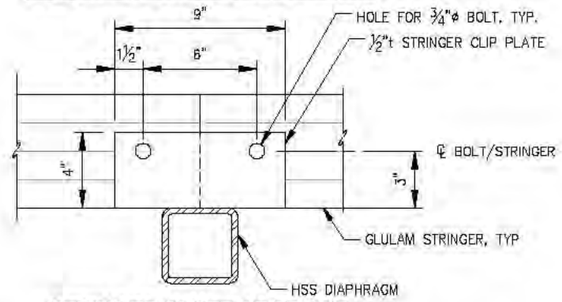

STRINGER PLATE AT SPLICE

NOTE: 3⅛"x6" GLULAM STRINGERS MAY ONLY BE SPLICED IN CASES WHERE DESIGN LENGTH PRECLUDES SAFE HANDLING. SPLICE LOCATIONS AND GLULAM LENGTH SHALL BE SUBMITTED FOR ENGINEER APPROVAL.

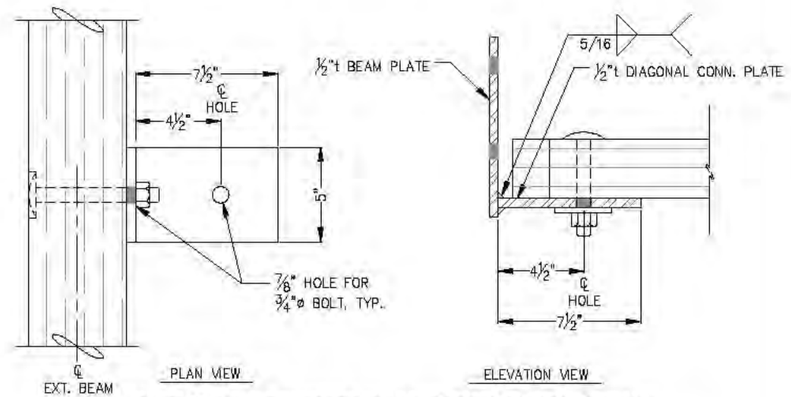

DIAGONAL EXTERIOR BEAM CONNECTION DETAIL

(60' AND 85' FINGER)

REVISIONS

REV.	DATE	DESCRIPTION	DWN.	CKD.	APP.

P N D ENGINEERS, INC.
9360 Glacier Highway, Ste. 100
Juneau, Alaska 99801
Phone: 907-586-2093
Fax: 907-586-2099
www.pndengineers.com

DESIGN: MS CHECKED: JLD
DRAWN: MS/WRB APPROVED: CRS
SCALE:
DATE: 2/28/14

STATE OF ALASKA — John L. Dekuh — GC-8847 — REGISTERED PROFESSIONAL CIVIL ENGINEER

CITY & BOROUGH OF JUNEAU, ALASKA
AURORA HARBOR REBUILD - PHASE I
CONTRACT NO. DH 12-160

SHEET TITLE: **DIAPHRAGM DETAILS**

PND PROJECT NO.: 122055

7.14
SHEET 114 OF 143

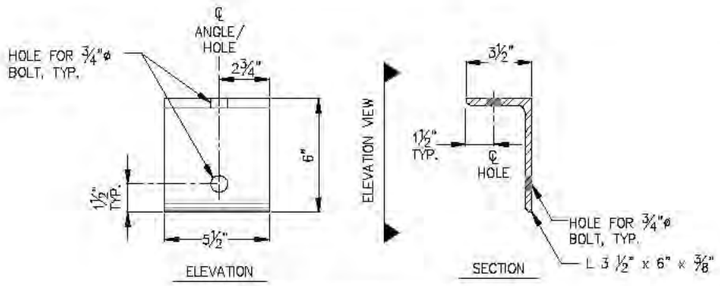

SILL CONNECTION ANGLE

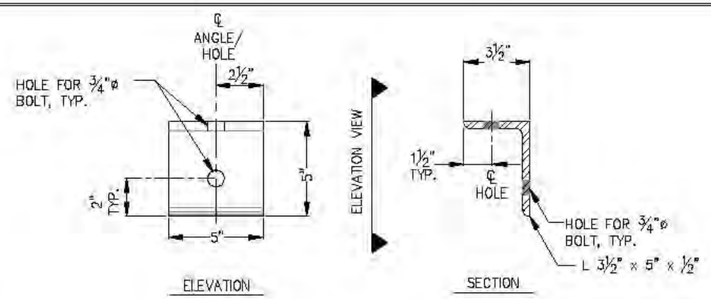

BULLRAIL CONNECTION ANGLE

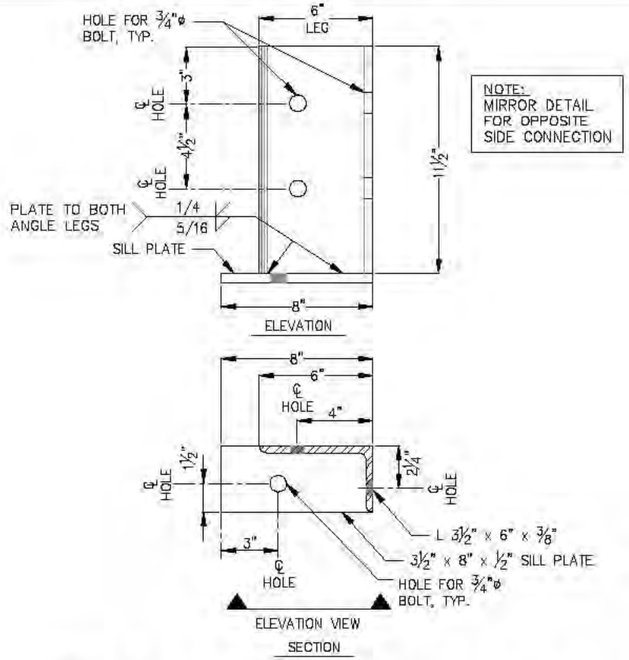

END GLULAM CONNECTION ANGLE WITH PLATE

(32' FINGER ONLY)

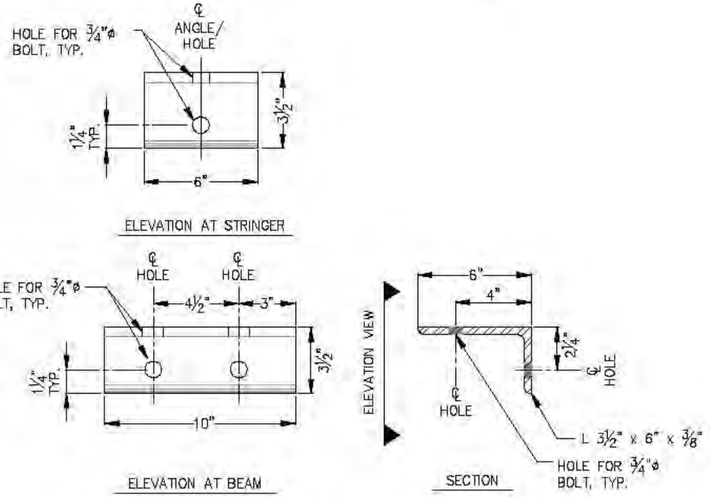

END GLULAM CONNECTION ANGLE

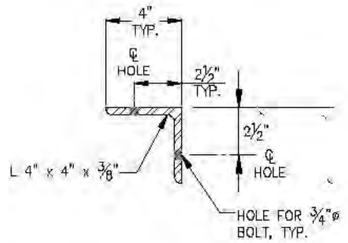

BALLAST TANK CONNECTION ANGLE

(LENGTH VARIES, SEE BALLAST TANK DETAILS)

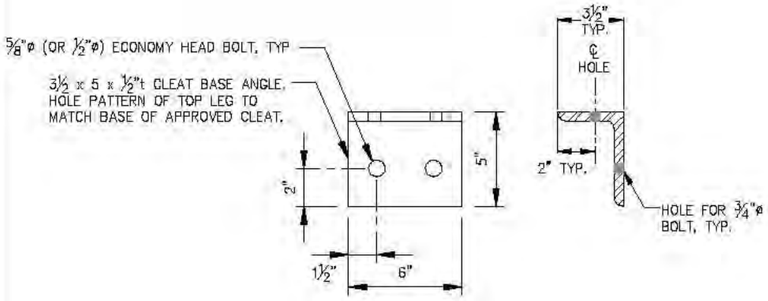

CLEAT BASE / STRINGER CONN. - ELEV

(32' FINGER ONLY)

REVISIONS

REV.	DATE	DESCRIPTION	DWN.	CKD.	APP.

P N D ENGINEERS, INC.
9360 Glacier Highway, Ste. 100
Juneau, Alaska 99801
Phone: 907-586-2093
Fax: 907-586-2099
www.pndengineers.com

DESIGN: MS CHECKED: JLD
DRAWN: MS/WRB APPROVED: CRS
SCALE:
DATE: 2/28/14

CITY & BOROUGH OF JUNEAU, ALASKA
AURORA HARBOR REBUILD - PHASE I
CONTRACT NO. DH 12-160

SHEET TITLE: ANGLE PLATE DETAILS

PND PROJECT NO.: 122055

7.15
SHEET 115 OF 143

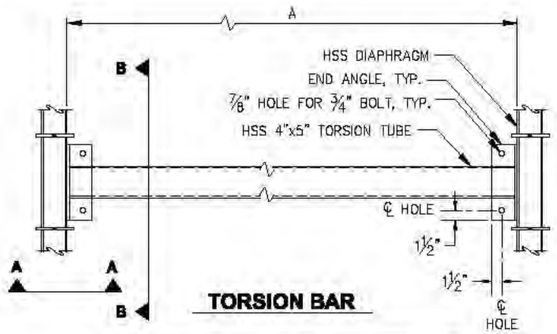

TORSION BAR

TORSION BAR SCHEDULE

FLOAT SIZE	A
6'x48'	19'-8"
6'x42'	17'-8"
4'x32'	12'-8"

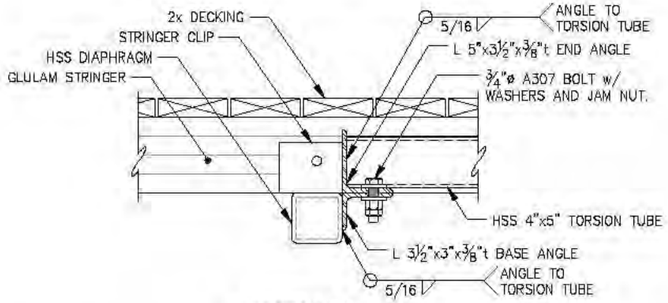

SECTION A-A

NOTE: GLULAM STRINGERS SHOWN IN 32 FOOT FINGER LOCATION. 42 FOOT AND 48 FOOT FINGER GLULAM STRINGERS HAVE ADDITIONAL CLEARANCE.

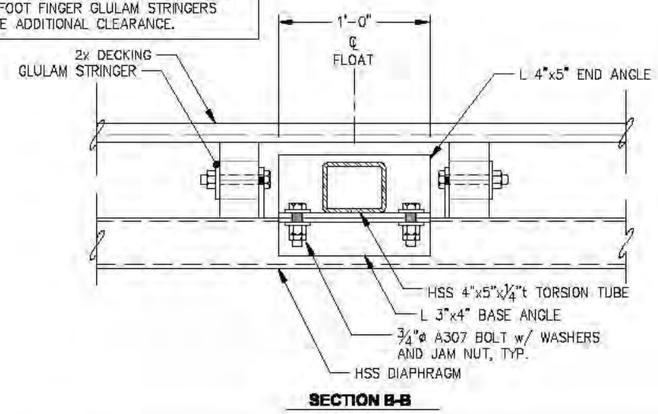

SECTION B-B

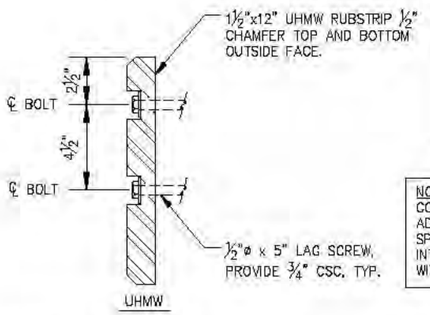

RUBSTRIP STANDARD LOCATION
(U.N.O. ON FLOAT PLAN)

FINGER SIZE	DIST. FROM HINGE (±)
85' & 110'	9'-0"
60' & 62'	6'-0"
48'	5'-0"
42'	4'-0"
32'	3'-0"

NOTE:
CONTRACTOR SHALL ADJUST STANDARD LAG SPACING TO MISS INTERNAL HARDWARE WITH IN FLOAT.

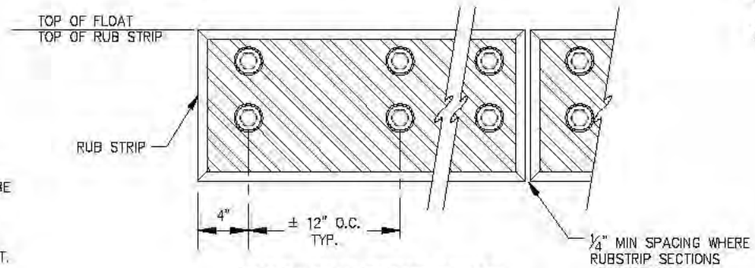

UHMW RUB STRIP DETAIL

(GLULAM RUBSTRIP SHOWN FOR FLOAT M1-1 AND HEADWALK FLOATS ONLY)

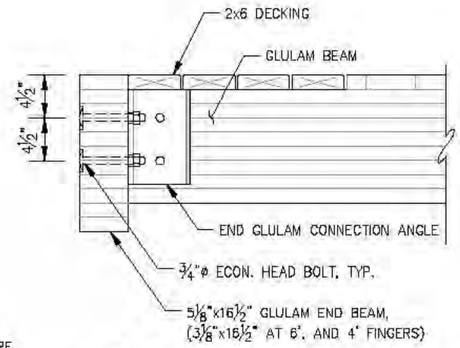

FLOAT END GLULAM SECTION

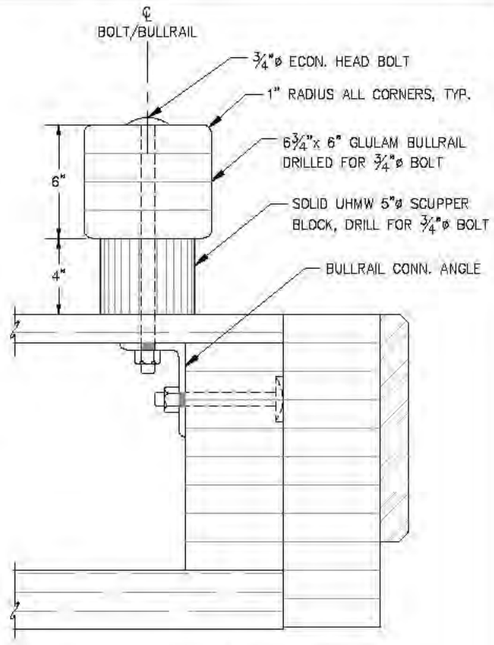

BULLRAIL & SCUPPER BLOCK

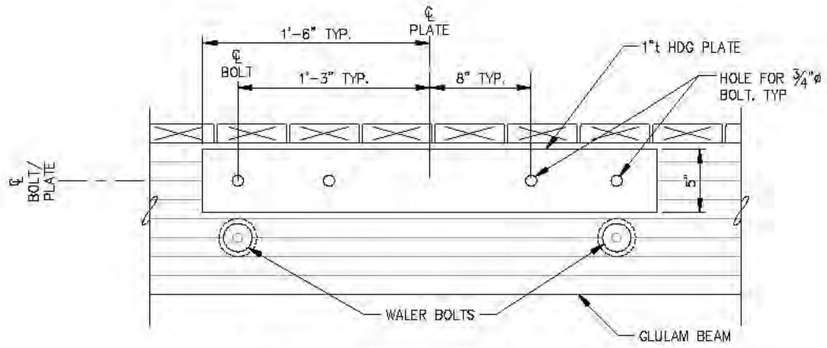

TYPICAL FLOAT COUNTERWEIGHT
(LOCATION AND NUMBER OF PLATES PER INDIVIDUAL FLOAT UNIT PLANS)

NOTE: LOCATE ON INSIDE OF EXTERIOR BEAM, USE WALER BOLTS TO FASTEN TO BEAM, PLATE WEIGHT IS 50 POUNDS. PROVIDE ADEQUATE BOLT LENGTH TO ACCOMMODATE INSTALLATION OF COUNTERWEIGHT PLATE(S).

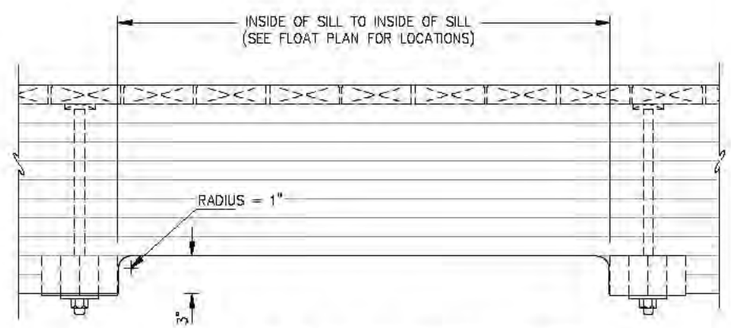

GLULAM WALER MODIFICATION FOR ELEC. CABLE PASSAGE

REVISIONS

REV.	DATE	DESCRIPTION	DWN.	CKD.	APP.

P N D ENGINEERS, INC.
9360 Glacier Highway, Ste. 100
Juneau, Alaska 99801
Phone: 907-586-2093
Fax: 907-586-2099
www.pndengineers.com

DESIGN: MS CHECKED: JLD
DRAWN: MS/WRB APPROVED: CRS
SCALE:
DATE: 2/28/14

STATE OF ALASKA — John L. Dekuth — CC-8847 — REGISTERED PROFESSIONAL ENGINEER

CITY & BOROUGH OF JUNEAU, ALASKA
AURORA HARBOR REBUILD - PHASE I
CONTRACT NO. DH 12-160

SHEET TITLE:
MISCELLANEOUS FLOAT UNIT DETAILS

PND PROJECT NO.: 122055

7.16
SHEET 116 OF 143

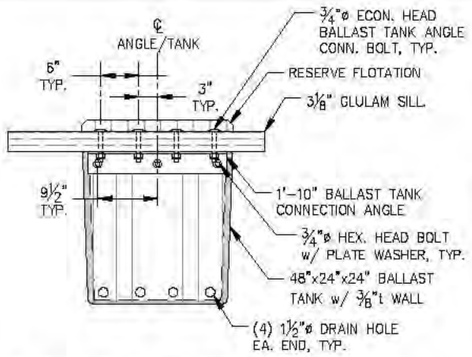

10ft & 8ft WIDE MODULE BALLAST TANK

(FLOAT SECTION VIEW)

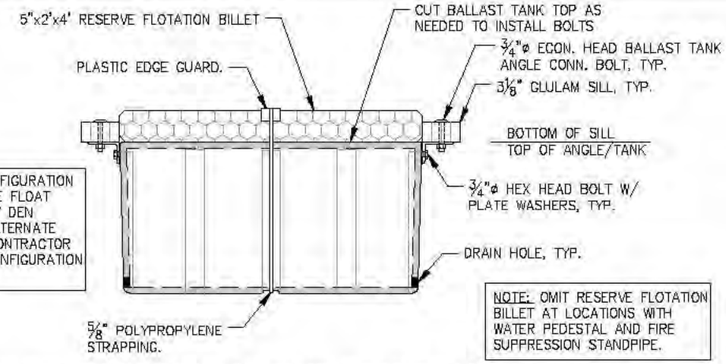

NOTE: BALLAST TANK CONFIGURATION ASSUMES THE USE OF ACE FLOAT DRUMS MANUFACTURED BY DEN HARTOG INDUSTRIES. IF ALTERNATE UNITES ARE PROPOSED, CONTRACTOR SHALL SUBMIT REVISED CONFIGURATION FOR ENGINEER APPROVAL.

NOTE: OMIT RESERVE FLOTATION BILLET AT LOCATIONS WITH WATER PEDESTAL AND FIRE SUPPRESSION STANDPIPE.

10ft & 8ft MODULE BALLAST TANK & RESERVE FLOTATION

(TANK ELEVATION VIEW)

NOTE: SEE FLOTATION SCHEDULE FOR DEPTH AND LENGTH OF BILLETS.

NOTE: CUT POCKETS IN CORNERS OF BILLET ONLY AT FULL WIDTH BILLETS FOUND ON FLOATS G1 AND G2

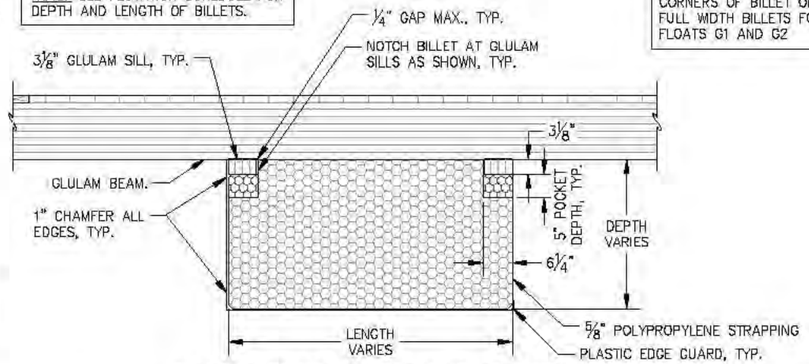

10ft & 8ft FLOTATION BILLET - SECTION

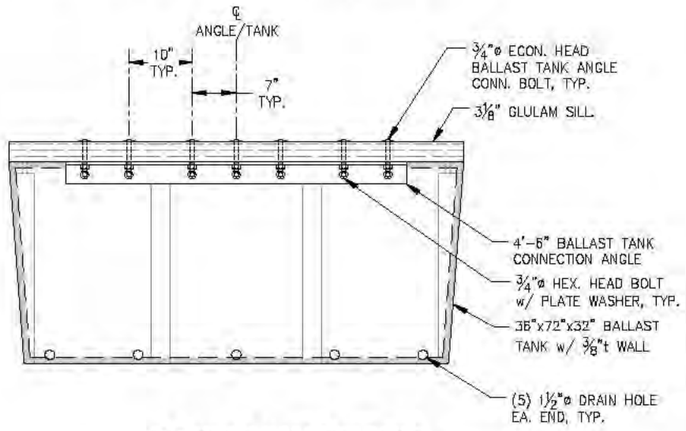

6ft FINGER BALLAST TANK

(FLOAT SECTION VIEW)

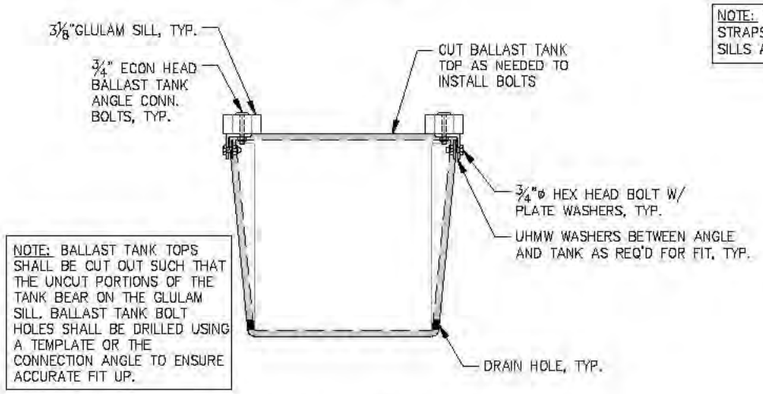

NOTE: BALLAST TANK TOPS SHALL BE CUT OUT SUCH THAT THE UNCUT PORTIONS OF THE TANK BEAR ON THE GLULAM SILL. BALLAST TANK BOLT HOLES SHALL BE DRILLED USING A TEMPLATE OR THE CONNECTION ANGLE TO ENSURE ACCURATE FIT UP.

6ft FINGER BALLAST TANK

(TANK ELEVATION VIEW)

NOTE: STRAP SHOWN FOR ILLUSTRATION ONLY. STRAPS ARE TO LAY ATOP/ OVER GLULAM SILLS AS SHOWN IN TYPICAL FLOAT SECTIONS.

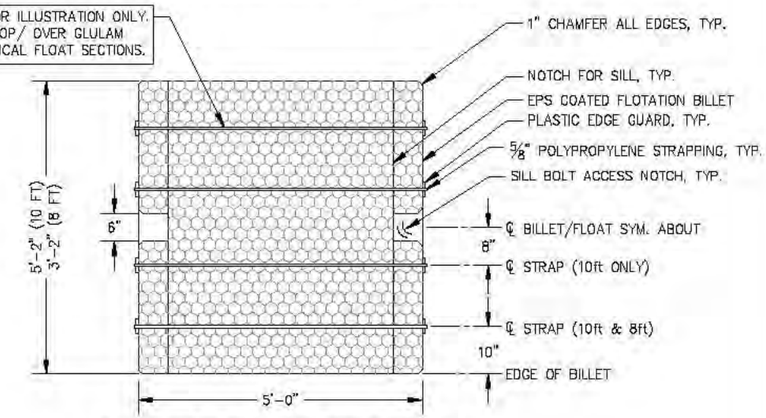

10ft & 8ft FLOTATION BILLET - PLAN

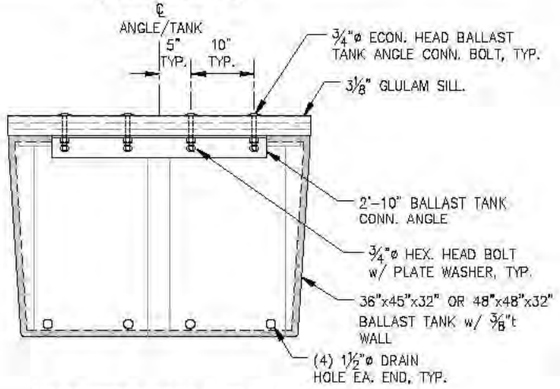

4ft FINGER BALLAST TANK

(FLOAT SECTION VIEW)

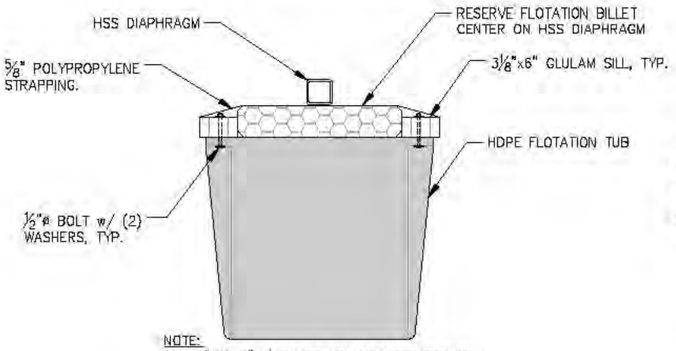

NOTE:
USE 5'x2'-2"x3' BILLET AT 4x3 FLOTATION TUB AND 5'x3'-2"x3' BILLET AT 4x4 FLOTATION TUB

10ft MODULE FLOTATION TUB AND RESERVE FLOTATION (8ft SIM.)

(TUB ELEVATION VIEW)

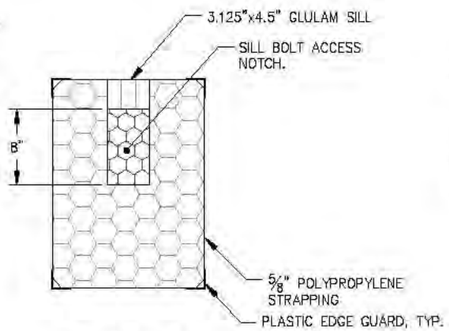

FINGER FLOTATION BILLET

(32', 42' AND 48' FINGERS)

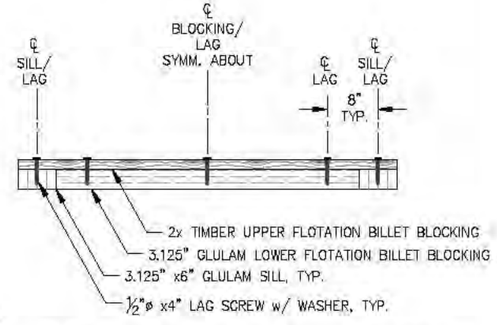

FLOTATION BILLET BLOCKING SECTION

REVISIONS

REV.	DATE	DESCRIPTION	DWN.	CKD.	APP.

P N D ENGINEERS, INC.
9360 Glacier Highway, Ste. 100
Juneau, Alaska 99801
Phone: 907-586-2093
Fax: 907-586-2099
www.pndengineers.com

DESIGN: MS CHECKED: JLD
DRAWN: WRB APPROVED: CRS
SCALE:
DATE: 2/28/14

STATE OF ALASKA — 49TH — REGISTERED PROFESSIONAL CIVIL ENGINEER — John L. Dahlvik CE-8847

CITY & BOROUGH OF JUNEAU, ALASKA
AURORA HARBOR REBUILD - PHASE I
CONTRACT NO. DH 12-160

SHEET TITLE:
BALLAST TANK AND FLOTATION BILLET DETAILS

PND PROJECT NO.: 122055

7.17
SHEET 117 OF 143

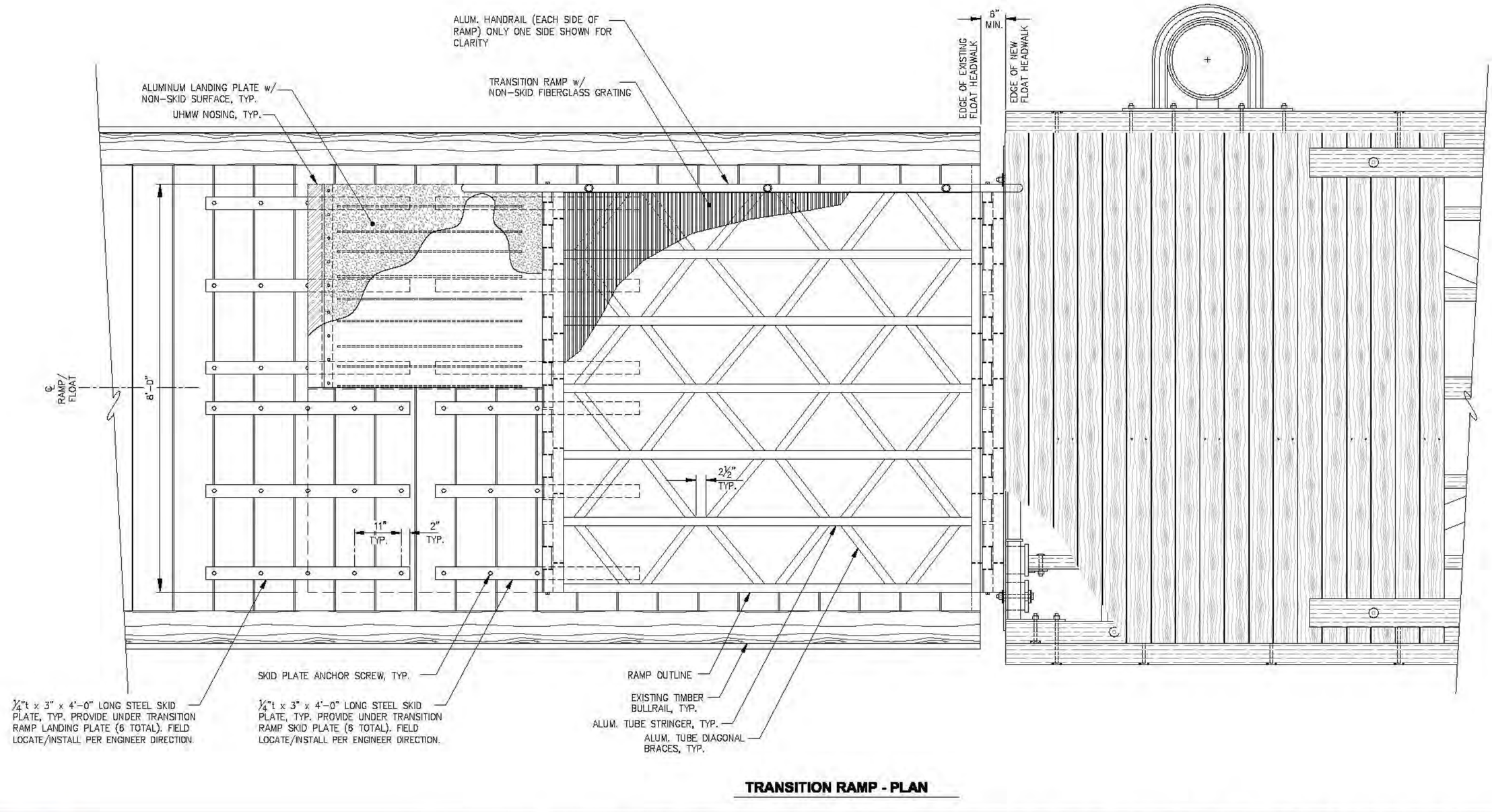

TRANSITION RAMP - PLAN

REVISIONS

REV.	DATE	DESCRIPTION	DWN.	CKD.	APP.

PND ENGINEERS, INC.
9360 Glacier Highway, Ste. 100
Juneau, Alaska 99801
Phone: 907-586-2093
Fax: 907-586-2099
www.pndengineers.com

DESIGN: MS CHECKED: JLD
DRAWN: WRB APPROVED: CRS
SCALE: NTS
DATE: 2/28/14

CITY & BOROUGH OF JUNEAU, ALASKA
AURORA HARBOR REBUILD - PHASE I
CONTRACT NO. DH 12-160

SHEET TITLE: TRANSITION RAMP PLAN
PND PROJECT NO.: 122055
7.18
SHEET 118 OF 143

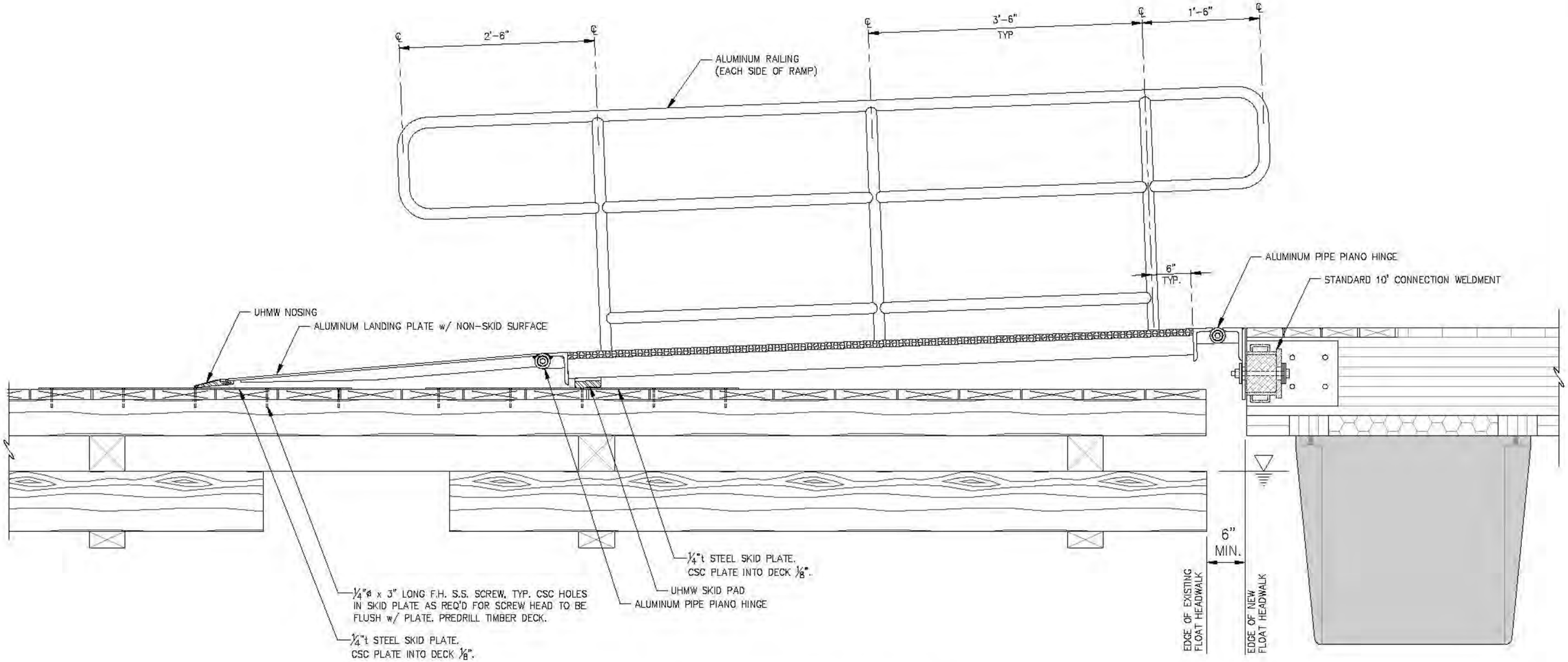

TRANSITION RAMP - ELEVATION

REVISIONS

REV.	DATE	DESCRIPTION	DWN.	CKD.	APP.

PND ENGINEERS, INC.
9360 Glacier Highway, Ste. 100
Juneau, Alaska 99801
Phone: 907-586-2093
Fax: 907-586-2099
www.pndengineers.com

DESIGN: MS CHECKED: JLD
DRAWN: WRB APPROVED: CRS
SCALE: NTS
DATE: 2/28/14

STATE OF ALASKA — John L. Dellath CE-8847 — REGISTERED PROFESSIONAL CIVIL ENGINEER

CITY & BOROUGH OF JUNEAU, ALASKA
AURORA HARBOR REBUILD - PHASE I
CONTRACT NO. DH 12-160

SHEET TITLE: **TRANSITION RAMP ELEVATION**

PND PROJECT NO.: 122055

SHEET 7.19
119 OF 143

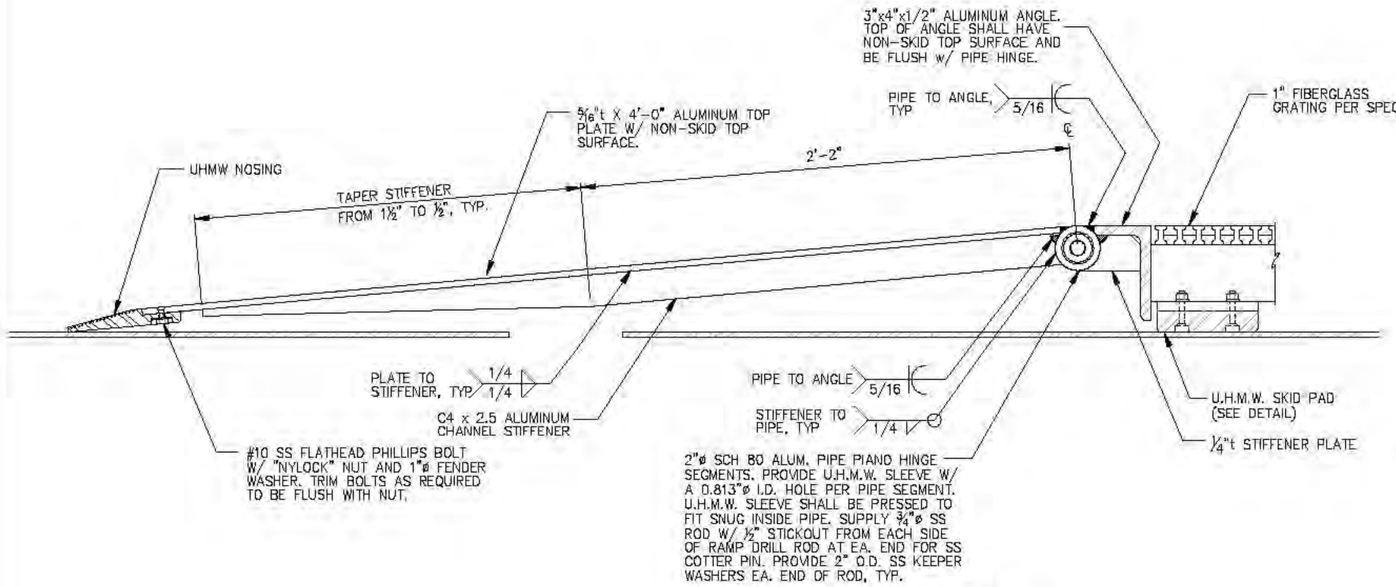

LANDING PLATE - SECTION

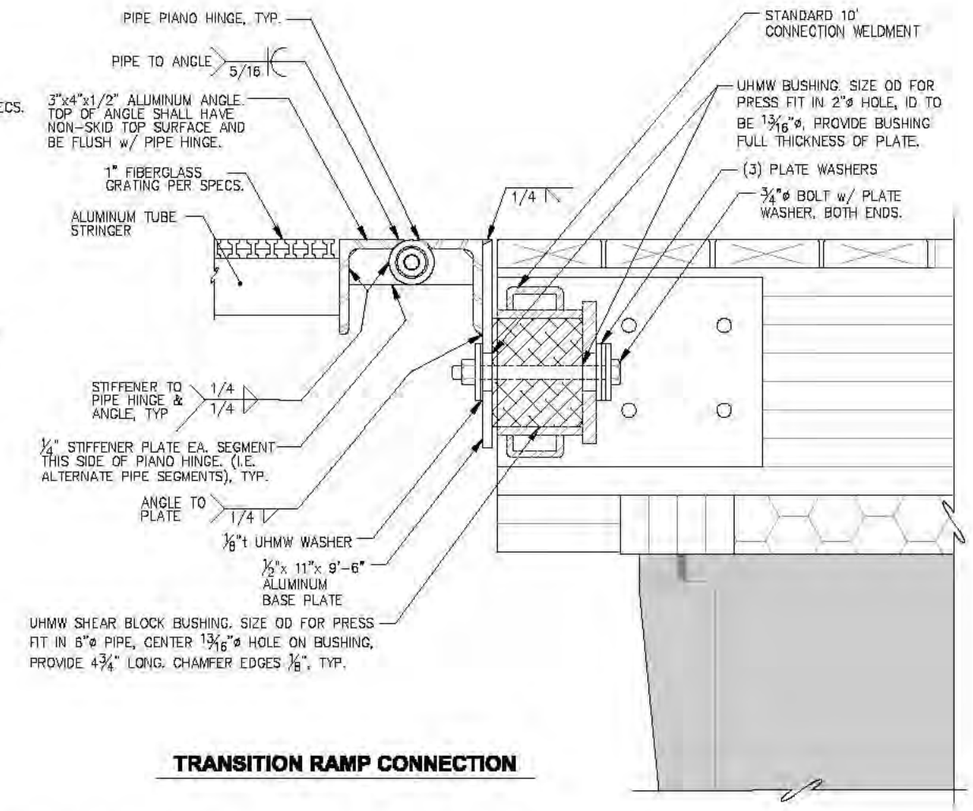

TRANSITION RAMP CONNECTION

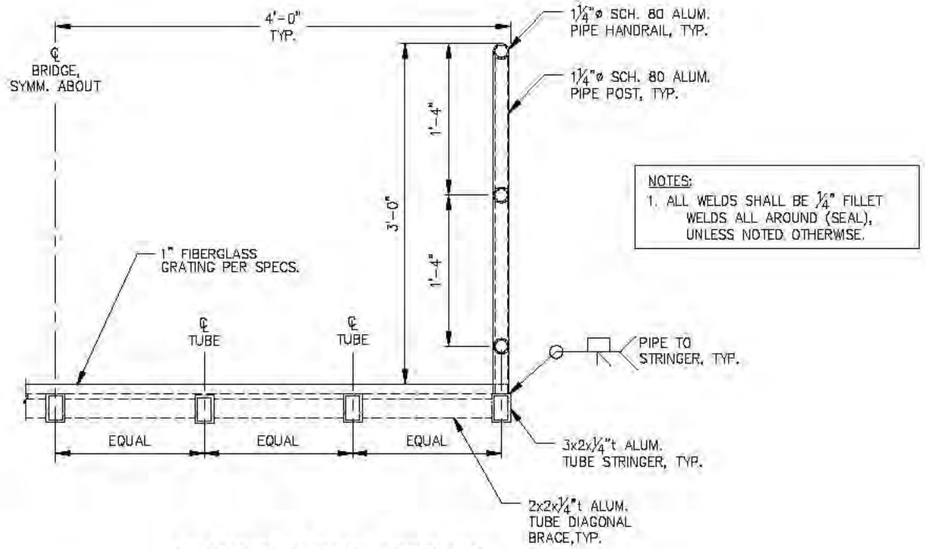

NOTES:
1. ALL WELDS SHALL BE ¼" FILLET WELDS ALL AROUND (SEAL), UNLESS NOTED OTHERWISE.

TRANSITION RAMP - SECTION

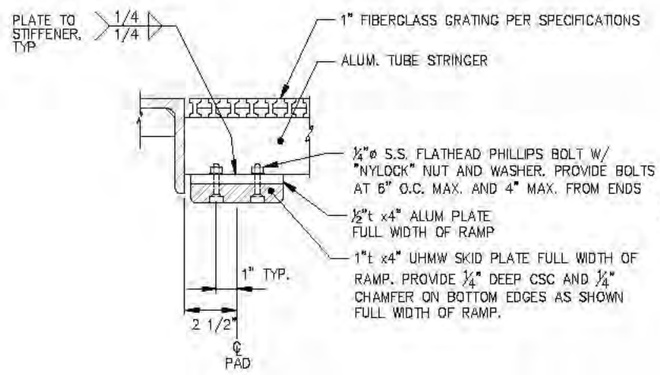

SKID PAD

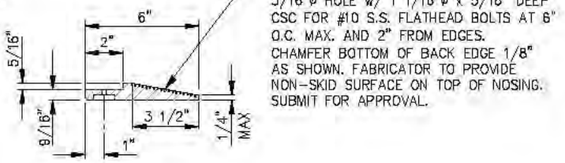

UHMW NOSING

REVISIONS

REV.	DATE	DESCRIPTION	DWN.	CKD.	APP.

PND ENGINEERS, INC.
9360 Glacier Highway, Ste. 100
Juneau, Alaska 99801
Phone: 907-586-2093
Fax: 907-586-2099
www.pndengineers.com

DESIGN: MS CHECKED: JLD
DRAWN: WRB APPROVED: CRS
SCALE: NTS
DATE: 2/28/14

STATE OF ALASKA — JOHN L. DeMOTT — 49TH — REGISTERED PROFESSIONAL CIVIL ENGINEER — CE-8547

CITY & BOROUGH OF JUNEAU, ALASKA
AURORA HARBOR REBUILD - PHASE I
CONTRACT NO. DH 12-160

SHEET TITLE: **TRANSITION RAMP DETAILS**

PND PROJECT NO.: 122055

7.20
SHEET 120 OF 143

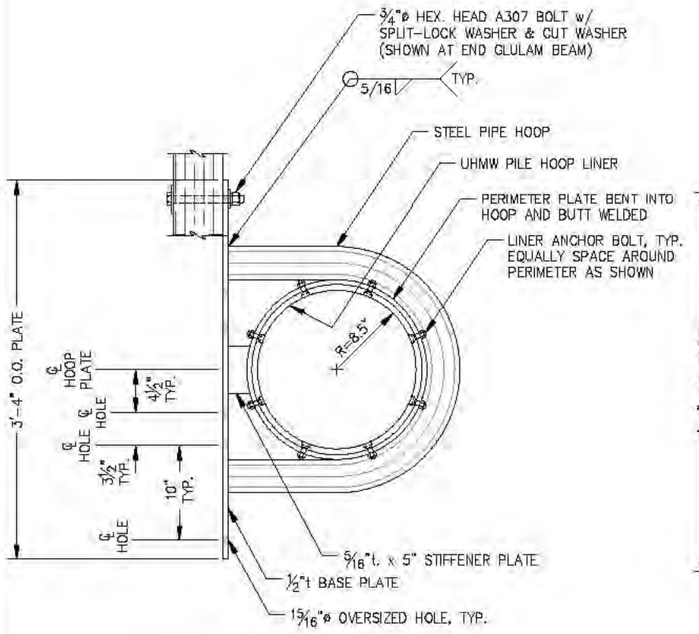

EXTERNAL 12.75"Ø PILE HOOP PLAN

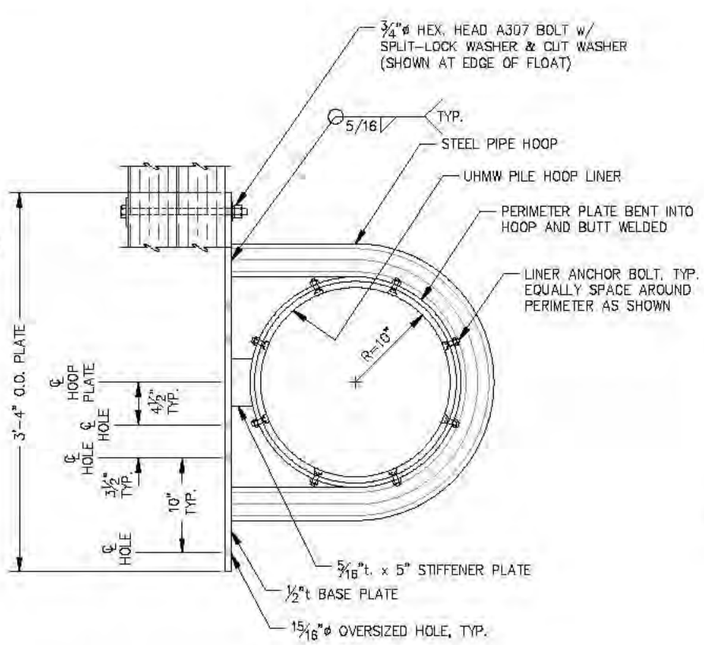

EXTERNAL 16"Ø PILE HOOP PLAN - TYPE 1

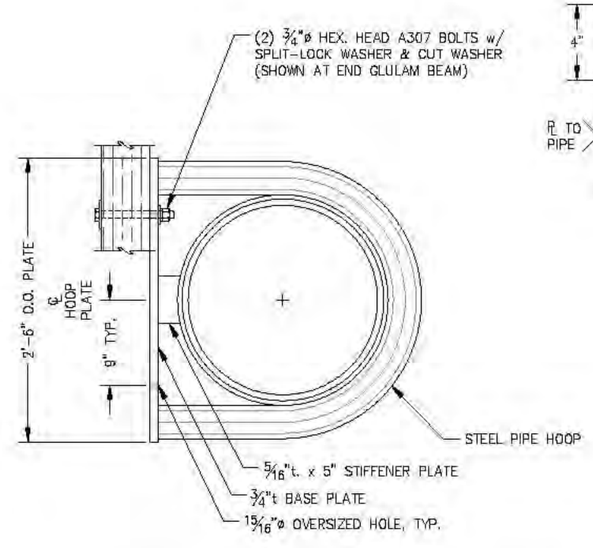

EXTERNAL 16"Ø PILE HOOP PLAN - TYPE 2
(DETAILS NOT SHOWN SIM. TO TYPE 1)

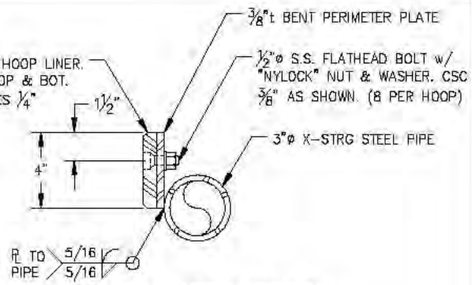

TYPICAL HOOP SECTION

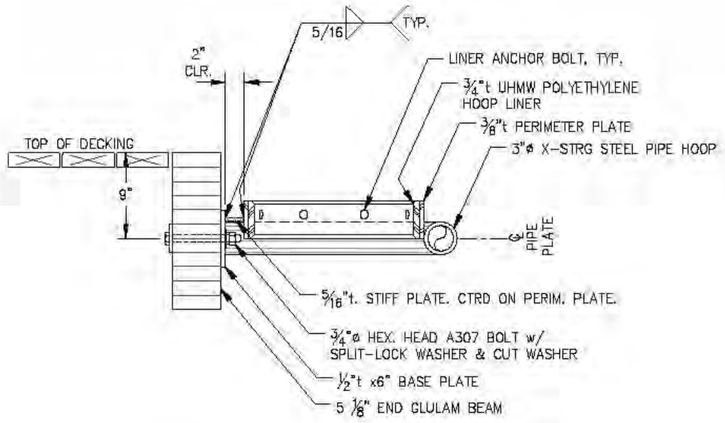

EXTERNAL PILE HOOP ELEVATION
END GLULAM MAINWALK / FINGER

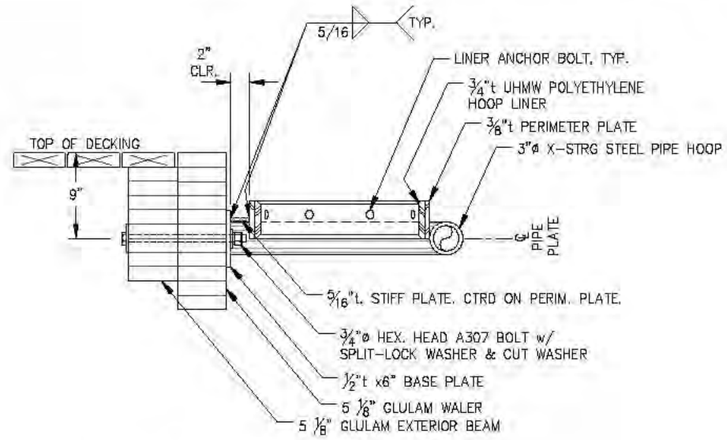

EXTERNAL PILE HOOP ELEVATION
EDGE OF FLOAT

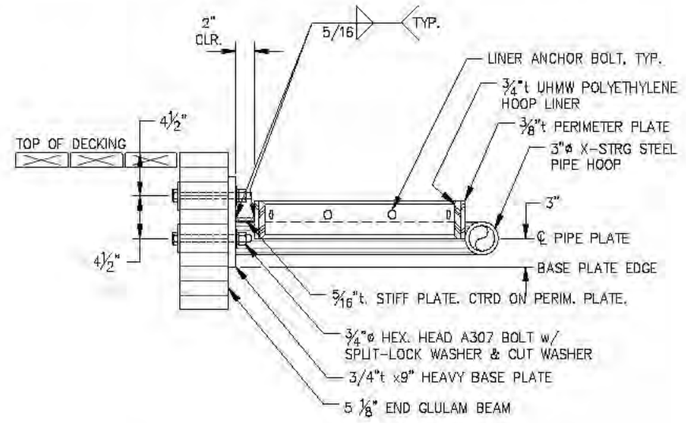

EXTERNAL PILE HOOP ELEVATION - TYPE 2
10FT AND 8FT FINGERS ONLY

REVISIONS

REV.	DATE	DESCRIPTION	DWN.	CKD.	APP.

P N D ENGINEERS, INC.
9360 Glacier Highway, Ste. 100
Juneau, Alaska 99801
Phone: 907-586-2093
Fax: 907-586-2099
www.pndengineers.com

DESIGN: MS CHECKED: JLD
DRAWN: WRB APPROVED: CRS
SCALE:
DATE: 2/28/14

STATE OF ALASKA — 49TH — John L. Dalrymple CE-8847 — REGISTERED PROFESSIONAL ENGINEER

CITY & BOROUGH OF JUNEAU, ALASKA
AURORA HARBOR REBUILD - PHASE I
CONTRACT NO. DH 12-160

SHEET TITLE:
EXTERNAL PILE HOOP DETAILS

PND PROJECT NO.: 122055

7.21
SHEET 121 OF 143

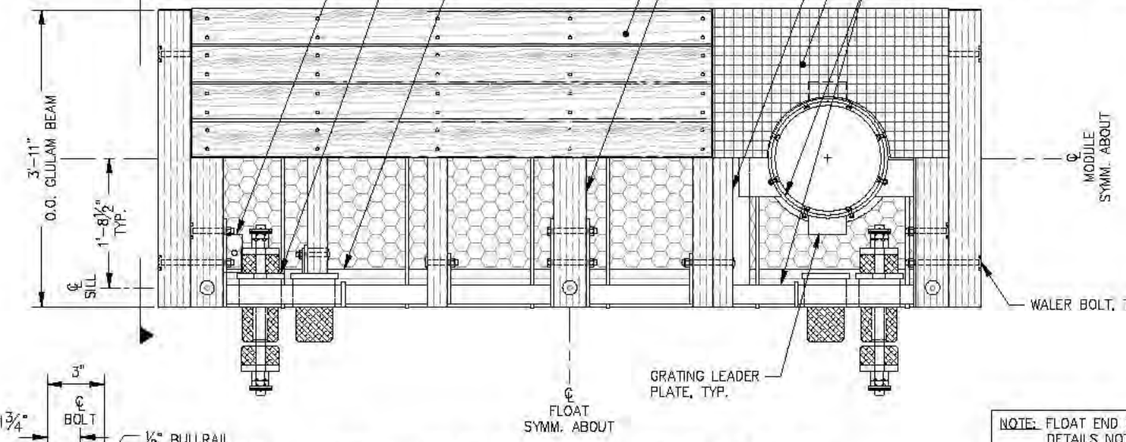

10' INTERNAL PILE MODULE PLAN - 12¾"Ø PILE

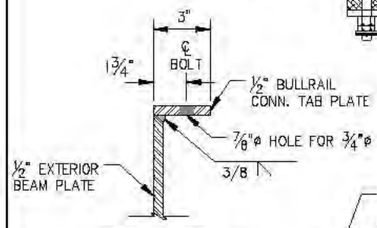

BULLRAIL CONNECTION TAB

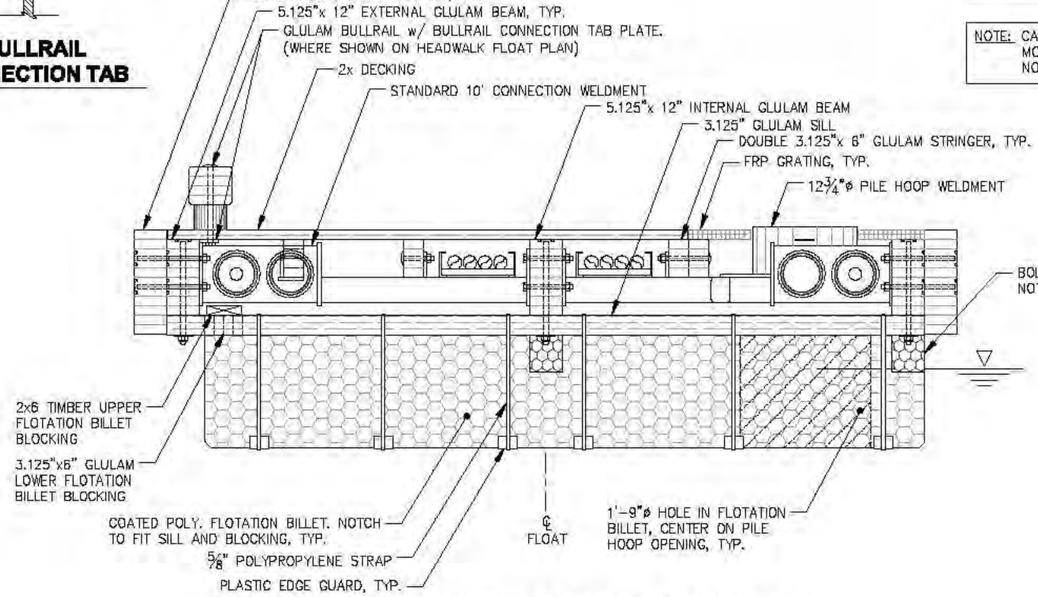

10' INTERNAL PILE MODULE SECTION - 12¾"Ø PILE

NOTE: PROVIDE FRP GRATING IN TWO (2) SECTIONS AS SHOWN. FASTEN TO BEAMS AND STRINGERS USING S.S. HARDWARE PER MANUFACTURERS GUIDELINES, TYP.

NOTE: FLOAT END CONNECTION WELDMENT DETAILS NOT SHOWN SIMILAR TO 10' CONNECTION WELDMENT PLAN.

NOTE: FLOTATION BILLET BLOCKING NOT SHOWN IN PLAN FOR CLARITY. SEE SECTION FOR DETAILS.

NOTE: CAUTION – PRIOR TO CONNECTING PILE MODULE TO FLOATS, PILE MODULE WILL NOT BE STABLE.

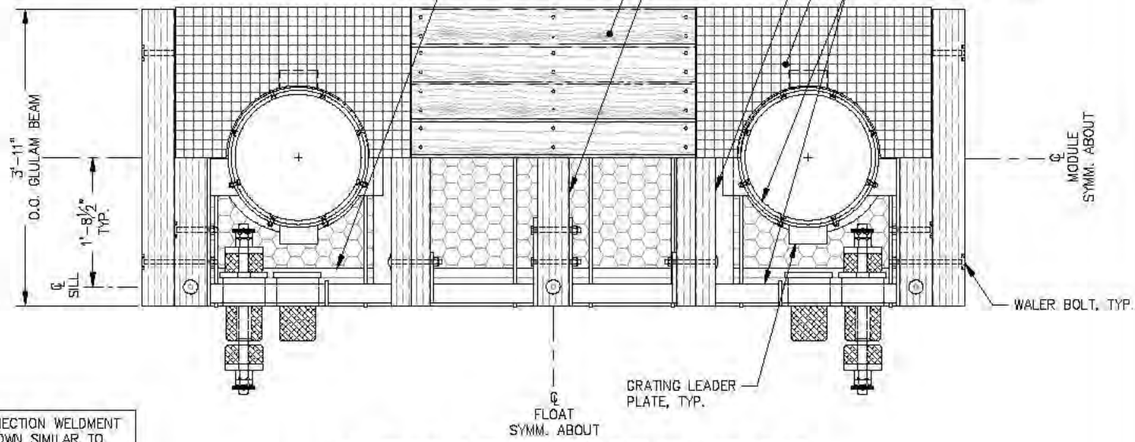

10' INTERNAL PILE MODULE PLAN - 16"Ø PILE

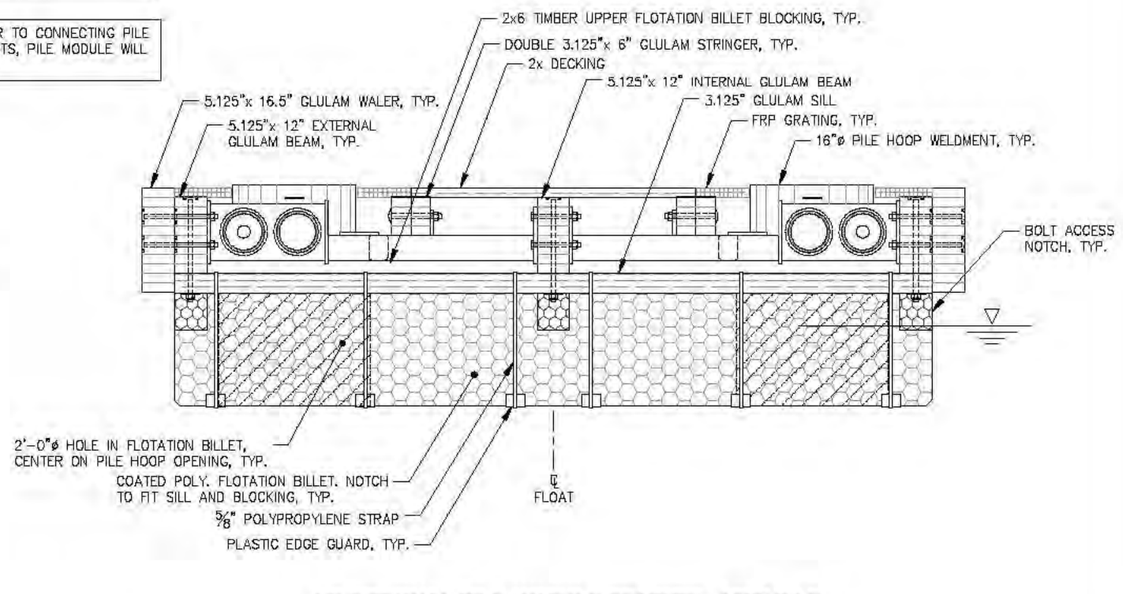

10' INTERNAL PILE MODULE SECTION - 16"Ø PILE

REVISIONS

REV.	DATE	DESCRIPTION	DWN.	CKD.	APP.

PND ENGINEERS, INC.
9360 Glacier Highway, Ste. 100
Juneau, Alaska 99801
Phone: 907-586-2093
Fax: 907-586-2099
www.pndengineers.com

DESIGN: MS CHECKED: JLD
DRAWN: WRB APPROVED: CRS
SCALE:
DATE: 2/28/14

STATE OF ALASKA — 49TH — John L. Dekuyla CC-8847 — REGISTERED PROFESSIONAL ENGINEER

CITY & BOROUGH OF JUNEAU, ALASKA
AURORA HARBOR REBUILD - PHASE I
CONTRACT NO. DH 12-160

SHEET TITLE: **INTERNAL PILE MODULE DETAILS**

PND PROJECT NO: 122055

7.22
SHEET 122 OF 143

NOTE: FLOATATION BILLET BLOCKING NOT SHOWN IN PLAN FOR CLARITY. SEE SECTION FOR DETAILS.

NOTE: CAUTION – PRIOR TO CONNECTING PILE MODULE TO FLOATS, PILE MODULE WILL NOT BE STABLE.

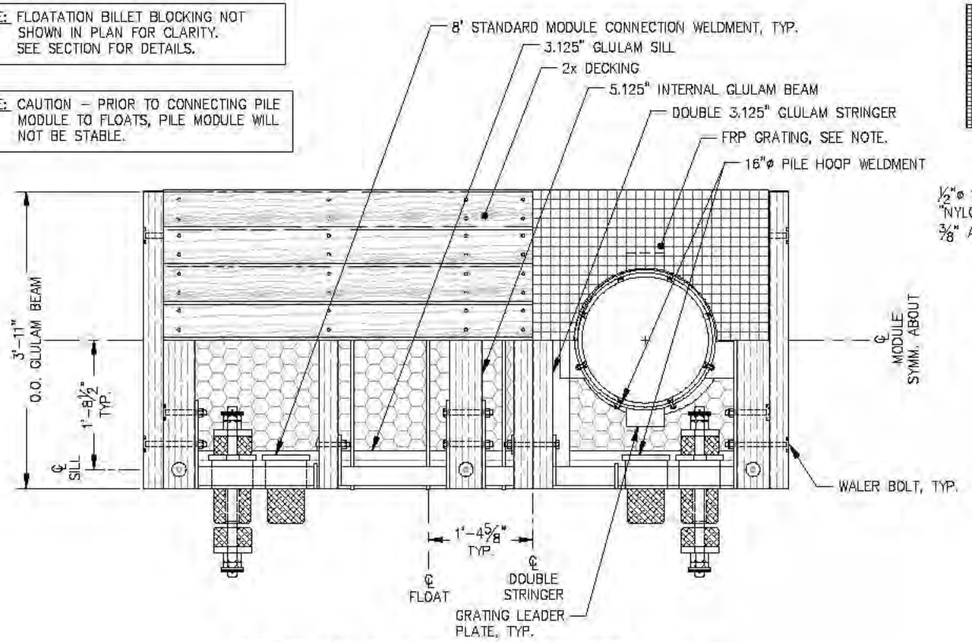

8' INTERNAL PILE MODULE PLAN - 16"Ø PILE

NOTE: PROVIDE FRP GRATING IN TWO (2) SECTIONS AS SHOWN. FASTEN TO BEAMS AND STRINGERS USING S.S. HARDWARE PER MANUFACTURERS GUIDELINES, TYP.

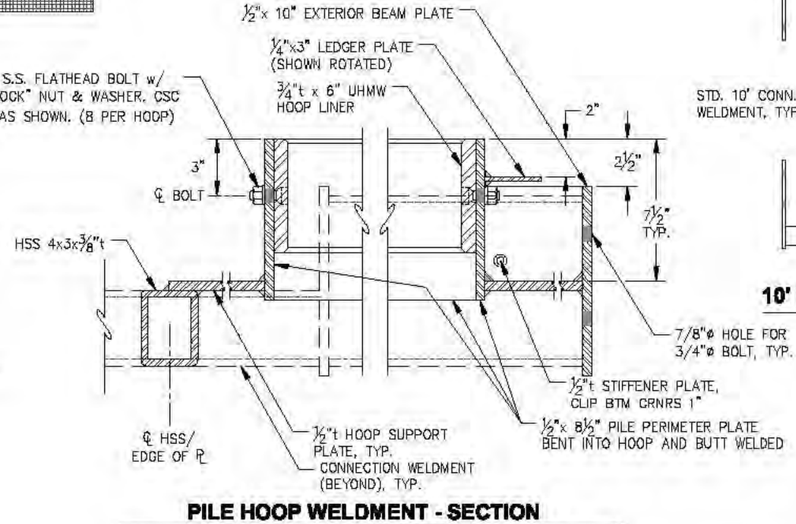

PILE HOOP WELDMENT - SECTION

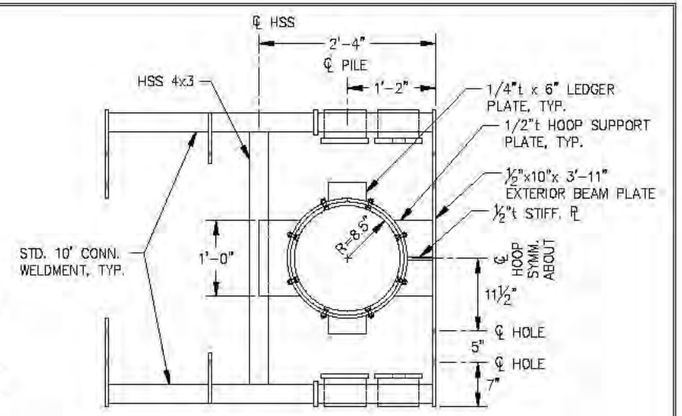

10' PILE HOOP WELDMENT - 12¾"Ø PILE

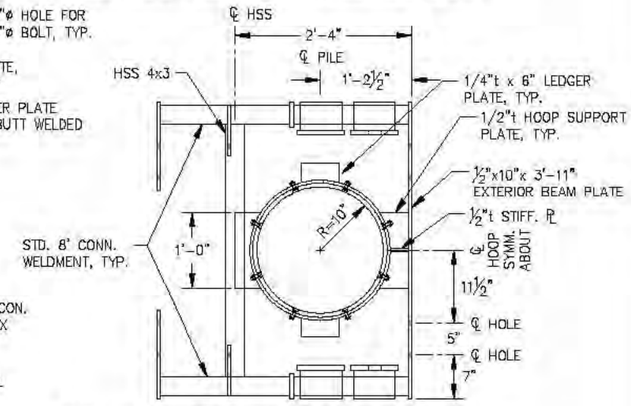

8' PILE HOOP WELDMENT - 16"Ø PILE

NOTE: FLOAT END CONNECTION WELDMENT DETAILS NOT SHOWN SIMILAR TO 10' CONNECTION WELDMENT PLAN.

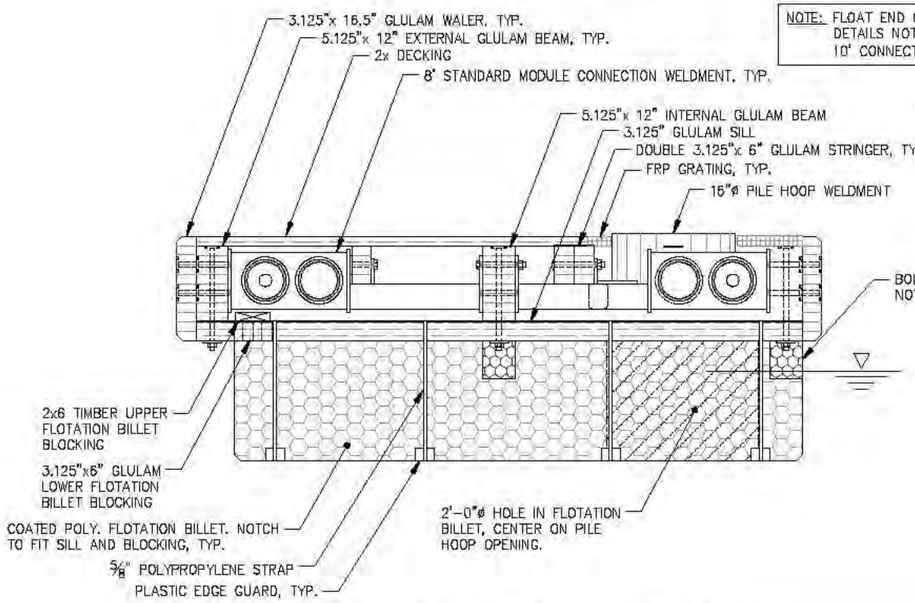

8' INTERNAL PILE MODULE SECTION - 16"Ø PILE

NOTE: ALL WELDS 5/16" FILLETS ALL AROUND UNLESS OTHERWISE NOTED.

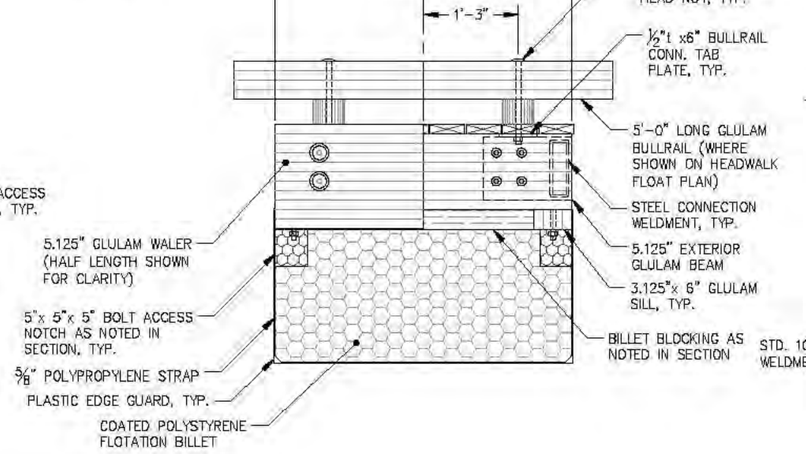

INTERNAL PILE HOOP MODULE - ELEVATION

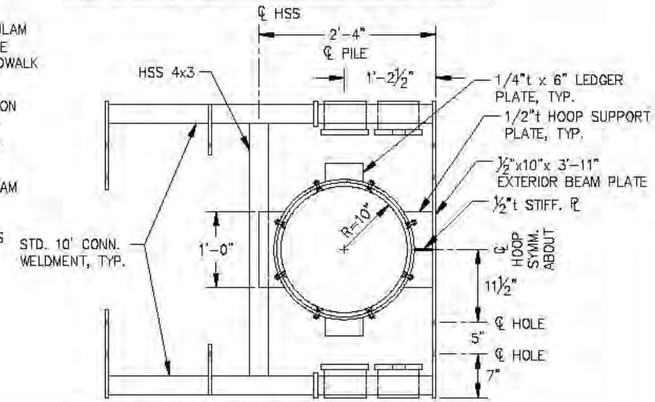

10' PILE HOOP WELDMENT - 16"Ø PILE

REVISIONS

REV.	DATE	DESCRIPTION	DWN.	CKD.	APP.

P N D ENGINEERS, INC.
9360 Glacier Highway, Ste. 100
Juneau, Alaska 99801
Phone: 907-586-2093
Fax: 907-586-2099
www.pndengineers.com

DESIGN: MS CHECKED: JLD
DRAWN: WRB APPROVED: CRS
SCALE:

STATE OF ALASKA — John L. Dekuh CC-8847 — REGISTERED PROFESSIONAL ENGINEER
DATE: 2/28/14

CITY & BOROUGH OF JUNEAU, ALASKA
AURORA HARBOR REBUILD - PHASE I
CONTRACT NO. DH 12-160

SHEET TITLE: **INTERNAL PILE MODULE DETAILS**

PND PROJECT NO.: 122055

7.23
SHEET 123 OF 143

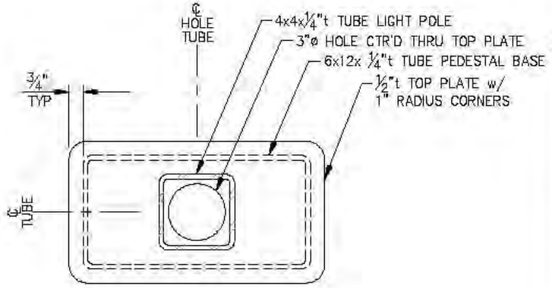

A - SECTION

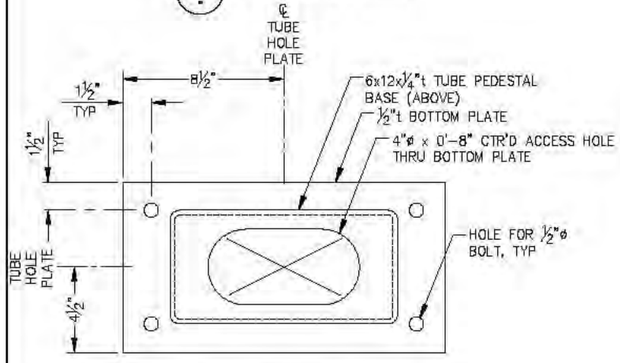

B - SECTION

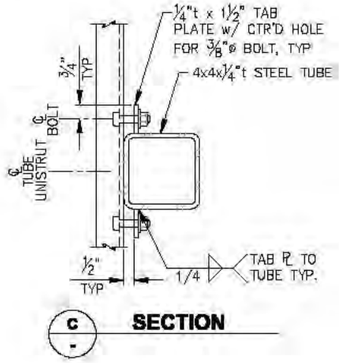

C - SECTION

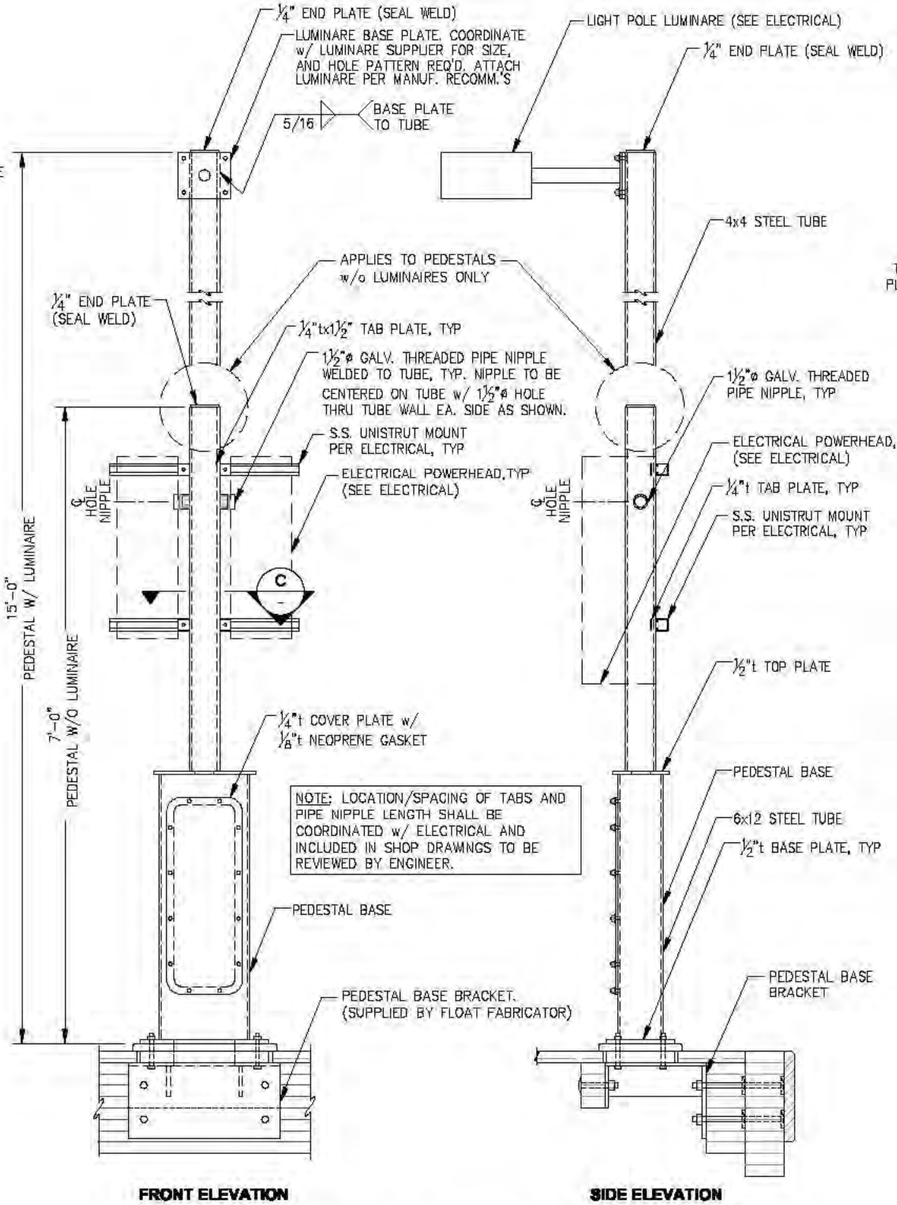

FRONT ELEVATION

SIDE ELEVATION

LIGHT POLE w/ PEDESTAL BASE

NOTE:
1. SEE FLOAT PLANS FOR LOCATION. ADJUST LOCATION AS REQUIRED TO CLEAR STRINGER LOCATIONS INDICATED ON FLOAT FRAMING PLANS.
2. PEDESTAL BASE BRACKET AT MAINWALK FLOAT ENDS DIFFER FROM ELEVATION SHOWN, SEE DETAILS.

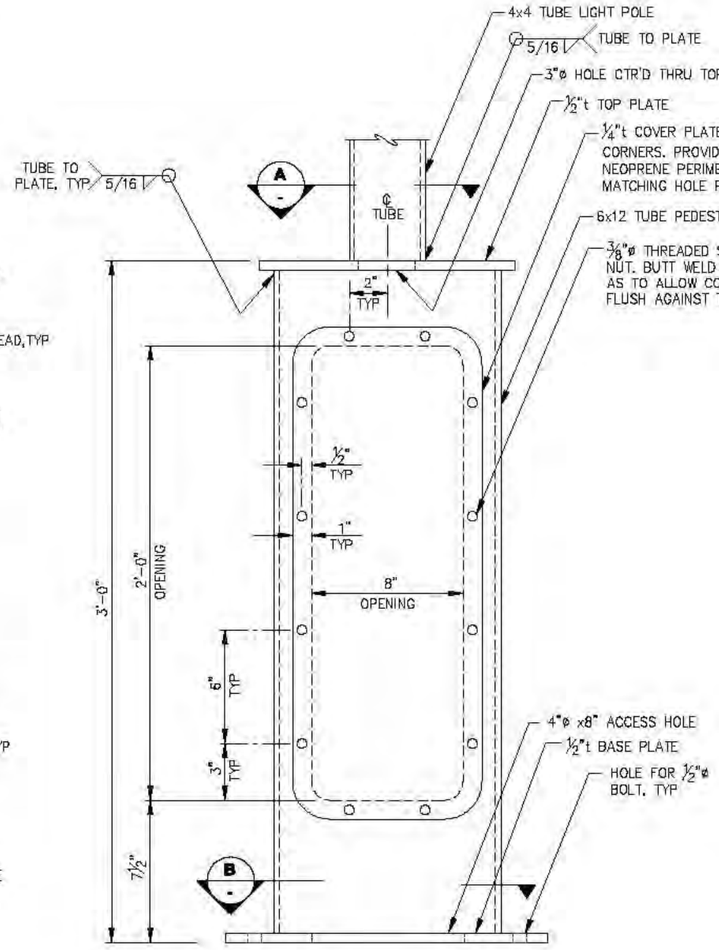

PEDESTAL BASE DETAIL

REVISIONS

REV.	DATE	DESCRIPTION	DWN.	CKD.	APP.

P N D ENGINEERS, INC.
9360 Glacier Highway, Ste. 100
Juneau, Alaska 99801
Phone: 907-586-2093
Fax: 907-586-2099
www.pndengineers.com

DESIGN: MS CHECKED: JLD
DRAWN: MS APPROVED: CRS
SCALE: NOT TO SCALE
DATE: 2/28/14

STATE OF ALASKA — John L. DeMuth CE-8847 — REGISTERED PROFESSIONAL ENGINEER

CITY & BOROUGH OF JUNEAU, ALASKA
AURORA HARBOR REBUILD - PHASE I
CONTRACT NO. DH 12-160

SHEET TITLE:
ELECTRICAL EQUIPMENT SUPPORT DETAILS

PND PROJECT NO.: 122055

7.24
SHEET 124 OF 143

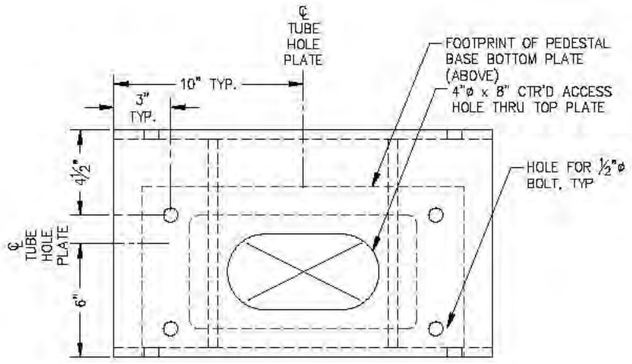

PEDESTAL BASE BRACKET - PLAN

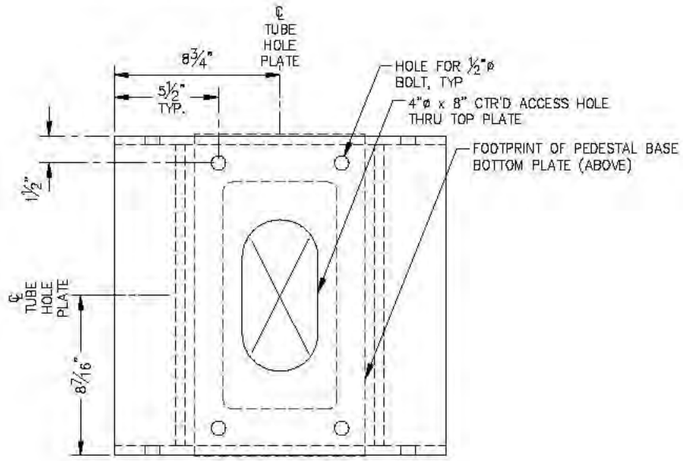

PEDESTAL BASE BRACKET - PLAN
MAINWALK END LOCATION

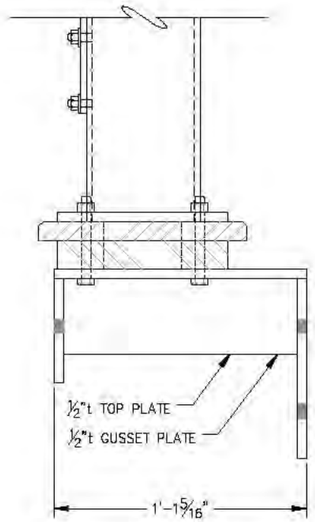

PEDESTAL BASE BRACKET - SECTION

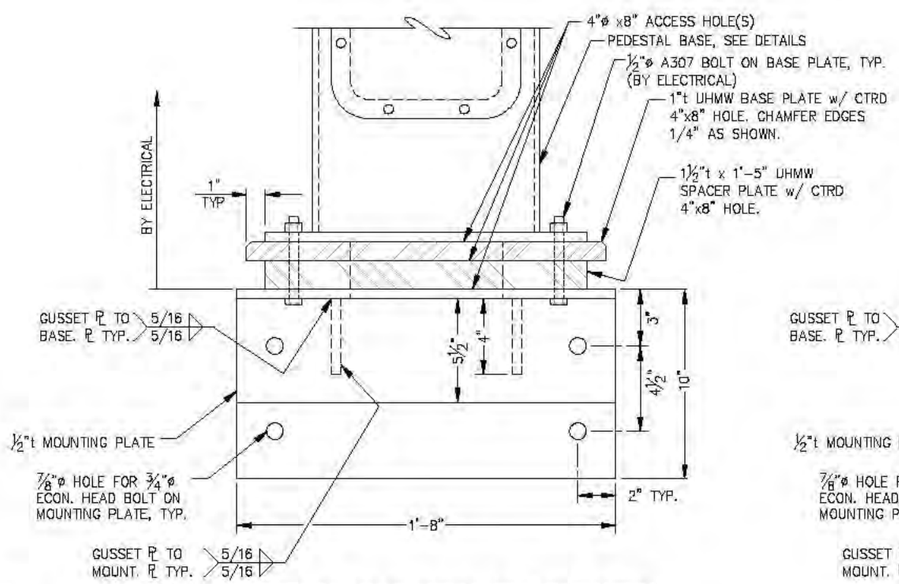

PEDESTAL BASE BRACKET - ELEVATION

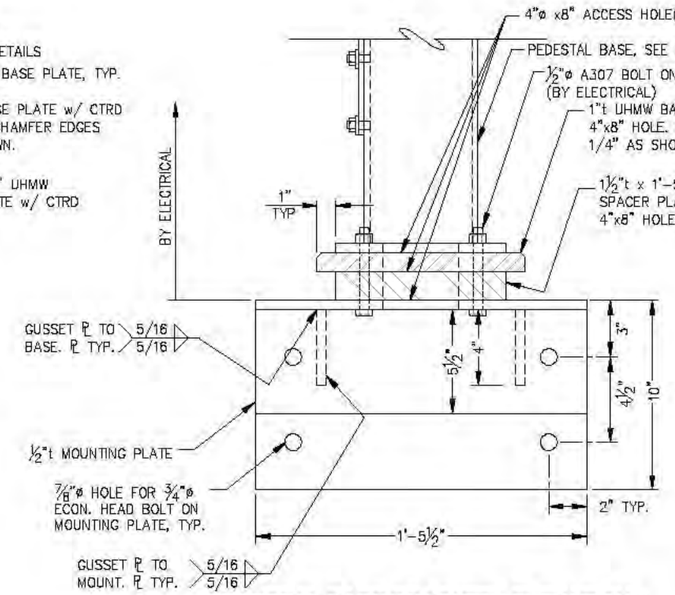

PEDESTAL BASE BRACKET - ELEVATION
MAINWALK END LOCATION

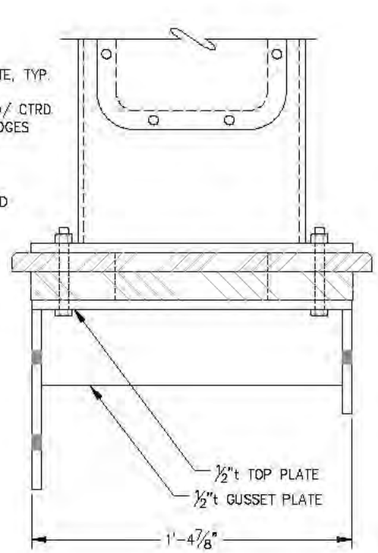

PEDESTAL BASE BRACKET - SECTION
MAINWALK END LOCATION

REVISIONS

REV.	DATE	DESCRIPTION	DWN.	CKD.	APP.

PND ENGINEERS, INC.
9360 Glacier Highway, Ste. 100
Juneau, Alaska 99801
Phone: 907-586-2093
Fax: 907-586-2099
www.pndengineers.com

DESIGN: MS CHECKED: JLD
DRAWN: MS/WRB APPROVED: CRS
SCALE: NOT TO SCALE
DATE: 2/28/14

CITY & BOROUGH OF JUNEAU, ALASKA
AURORA HARBOR REBUILD - PHASE I
CONTRACT NO. DH 12-160

SHEET TITLE:
ELECTRICAL EQUIPMENT SUPPORT DETAILS

PND PROJECT NO.: 122055

7.25
SHEET 125 OF 143

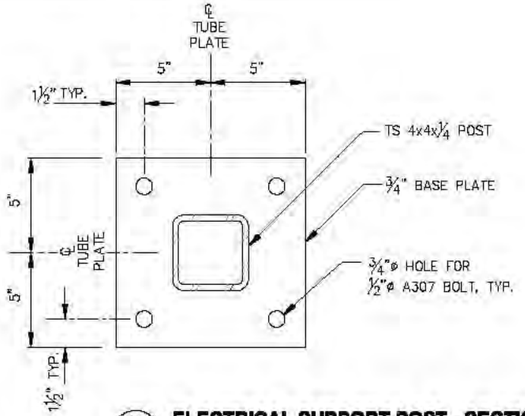

B
-

ELECTRICAL SUPPORT POST - SECTION

(G-2 AND C-FLOAT GANGWAY LANDING FLOAT)

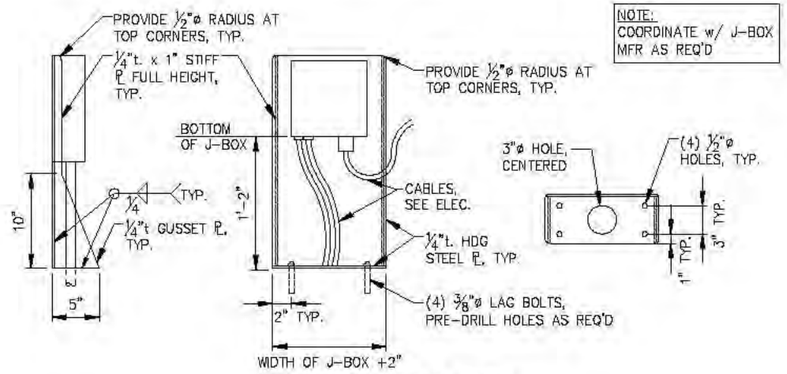

NOTE:
COORDINATE w/ J-BOX MFR AS REQ'D

HEAT TRACE J-BOX STAND DETAIL

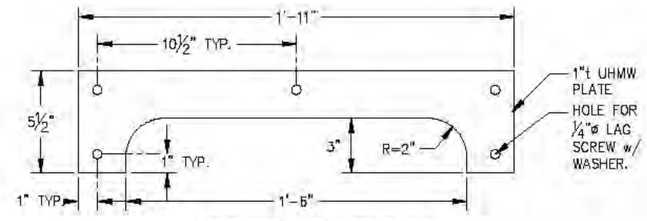

UHMW CABLE GUARD

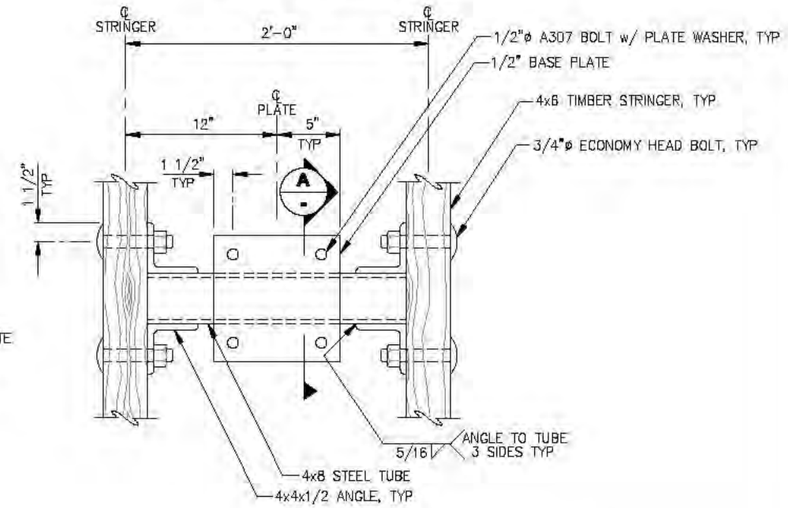

PLAN

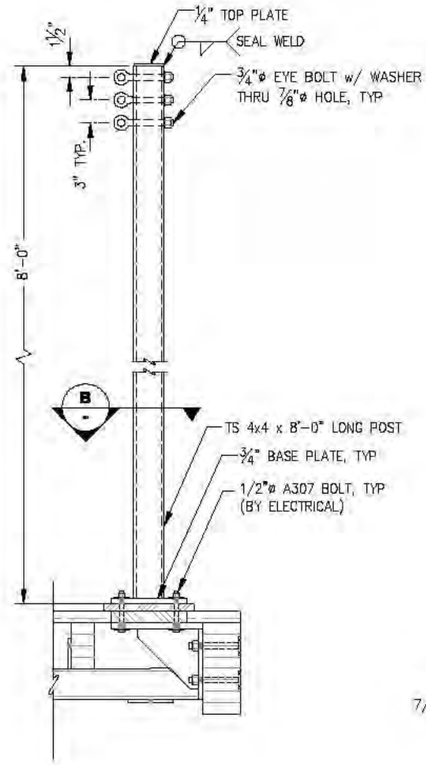

A
-

ELECTRICAL SUPPORT POST ELEVATION

(GANGWAY FLOAT UNIT G-2 LOCATION)

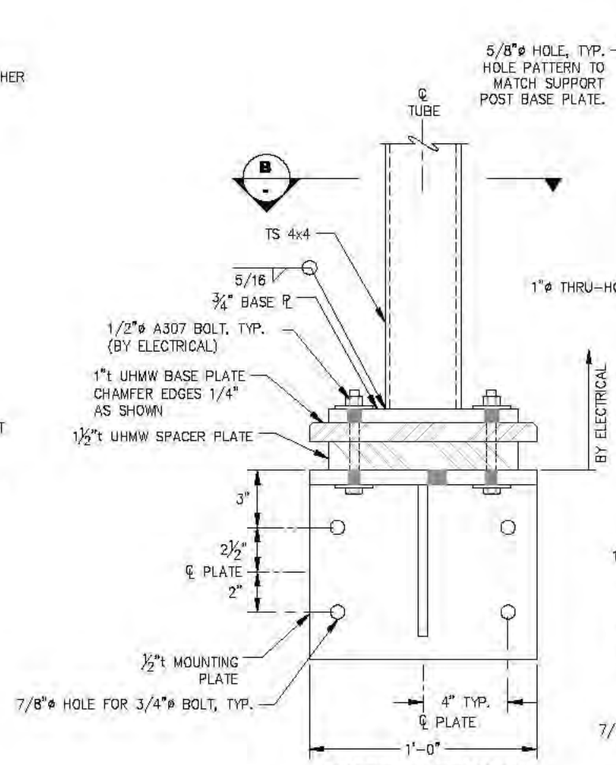

FRONT ELEVATION

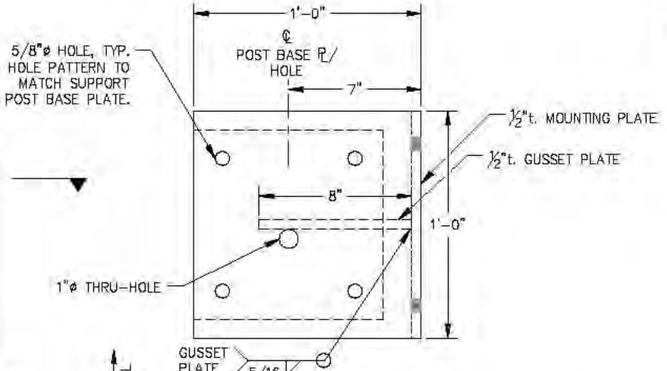

PLAN

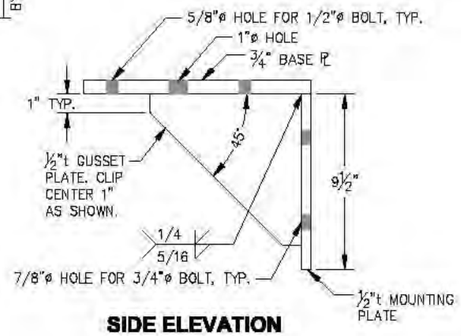

SIDE ELEVATION

ELECTRICAL SUPPORT POST BASE BRACKET

(GANGWAY FLOAT UNIT G-2 LOCATION AND WASTEWATER HOSE SUPPORT POST)

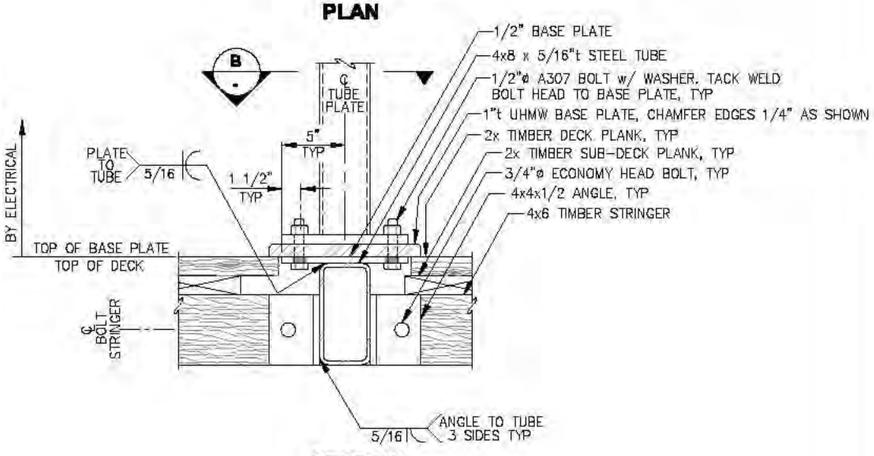

SECTION

ELECTRICAL SUPPORT POST BASE BRACKET

(C FLOAT GANGWAY LANDING FLOAT UNIT LOCATION)

REVISIONS

REV.	DATE	DESCRIPTION	DWN.	CKD.	APP.

P N D ENGINEERS, INC.
9360 Glacier Highway, Ste. 100
Juneau, Alaska 99801
Phone: 907-586-2093
Fax: 907-586-2099
www.pndengineers.com

DESIGN: MS CHECKED: JLD
DRAWN: WRB APPROVED: CRS
SCALE: NOT TO SCALE
DATE: 2/28/14

STATE OF ALASKA — REGISTERED PROFESSIONAL ENGINEER — John L. DeMuth CE-8847

CITY & BOROUGH OF JUNEAU, ALASKA
AURORA HARBOR REBUILD - PHASE I
CONTRACT NO. DH 12-160

SHEET TITLE:
ELECTRICAL EQUIPMENT SUPPORT DETAILS

PND PROJECT NO.: 122055

7.26
SHEET 126 OF 143

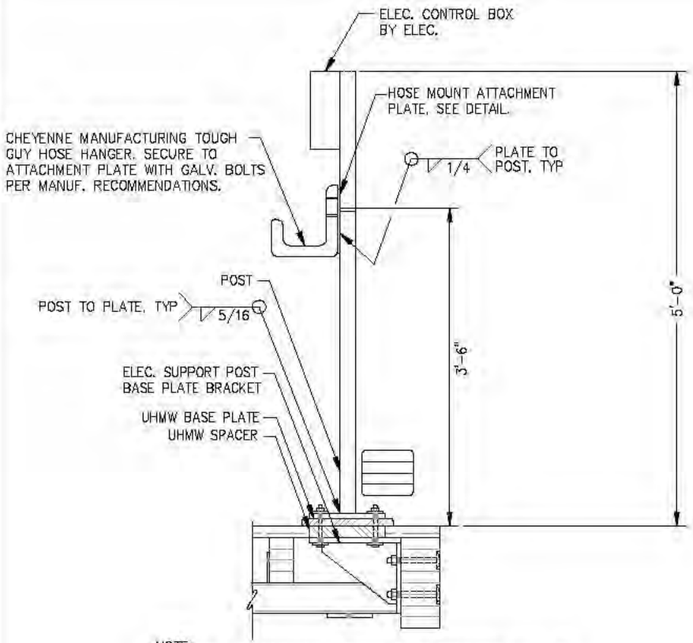

NOTE:
1. BASE AND CONNECTION DETAILS NOT SPECIFIED SHALL BE SIMILAR TO ELECTRICAL SUPPORT POST (G-2 LOCATION)
2. FINAL LOCATION PER FLOAT PLANS AND ENGINEER DIRECTION.

WASTE WATER HOSE MOUNT - ELEVATION

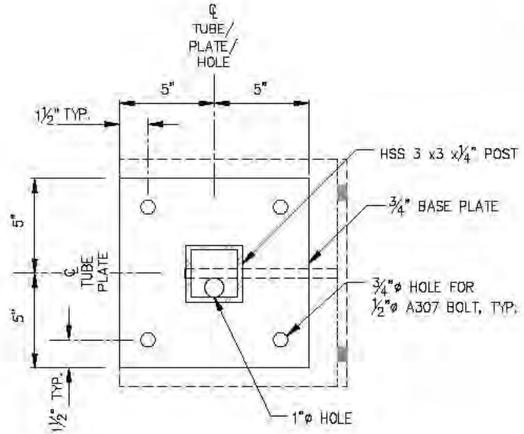

WASTEWATER HOSE MOUNT BASE PLATE - PLAN

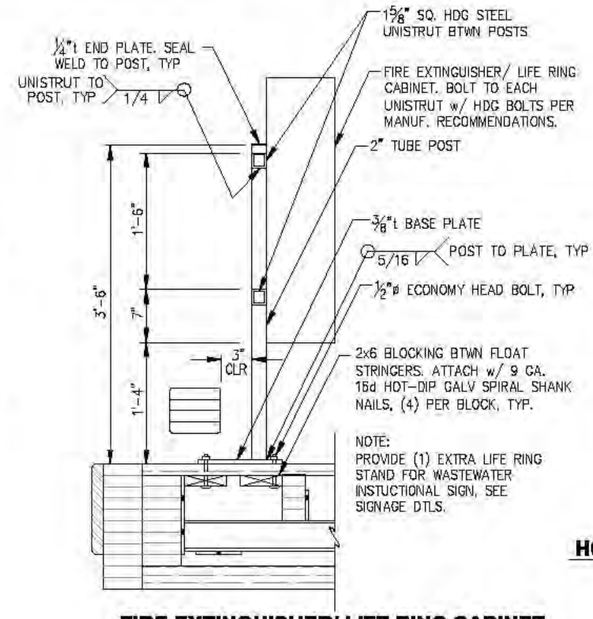

FIRE EXTINGUISHER/ LIFE RING CABINET

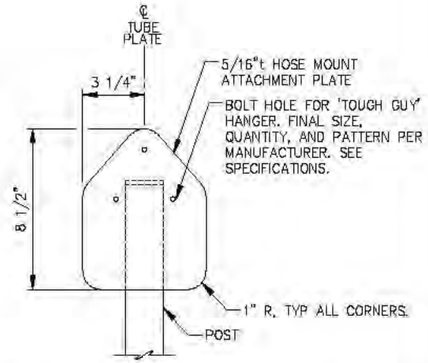

HOSE MOUNT ATTACHMENT PLATE - ELEVATION

FIRE EXTING. BASE - PLAN

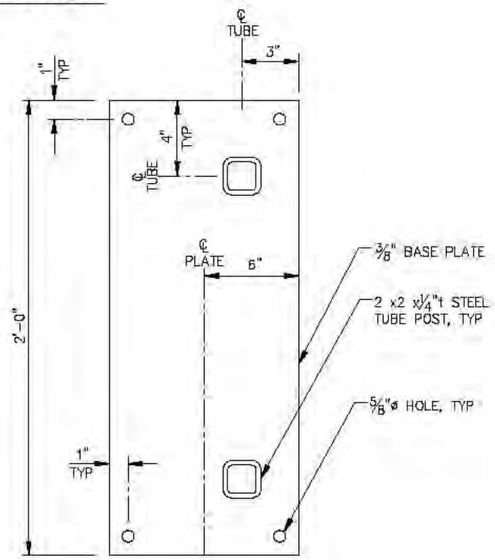

LIFE RING BASE - PLAN

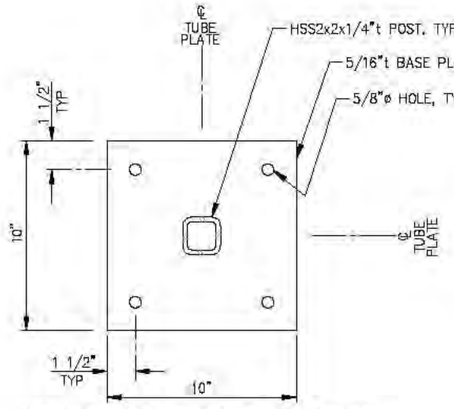

HOSE MOUNT BASE PLATE - PLAN

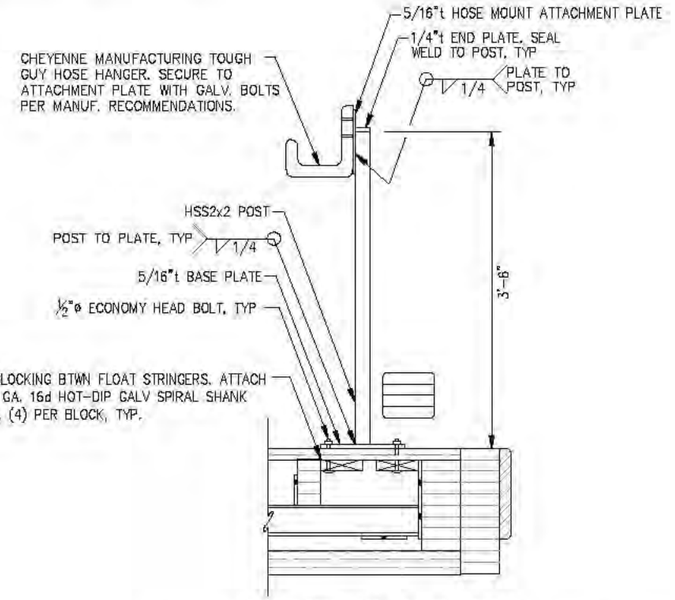

HOSE MOUNT - ELEVATION

NOTE: FINAL LOCATION PER FLOAT PLANS AND ENGINEER DIRECTION.

REVISIONS

REV.	DATE	DESCRIPTION	DWN.	CKD.	APP.

PND ENGINEERS, INC.
9360 Glacier Highway, Ste. 100
Juneau, Alaska 99801
Phone: 907-586-2093
Fax: 907-586-2099
www.pndengineers.com

DESIGN: MS CHECKED: JLD
DRAWN: MS/WRB APPROVED: CRS
SCALE: NOT TO SCALE
DATE: 2/28/14

STATE OF ALASKA — John L. DeMuth — CE-8647 — REGISTERED PROFESSIONAL ENGINEER

CITY & BOROUGH OF JUNEAU, ALASKA
AURORA HARBOR REBUILD - PHASE I
CONTRACT NO. DH 12-160

SHEET TITLE:
SAFETY EQUIPMENT SUPPORT DETAILS

PND PROJECT NO.: 122055

7.27
SHEET 127 OF 143

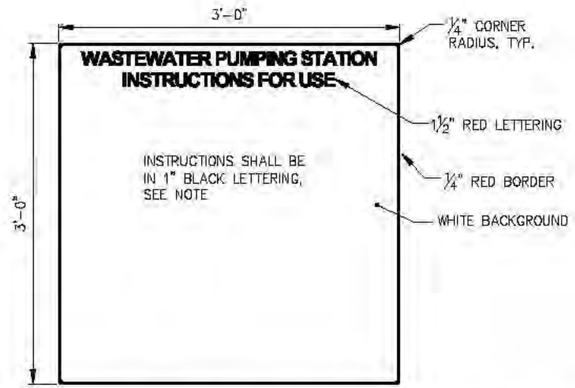

NOTE:
1. PROVIDE (2) IDENTICAL SIGNS TO BE MOUNTED BACK TO BACK.
2. INSTRUCTIONS SHALL BE COORDINATED WITH THE PUMP MANUFACTURER AND THE OWNER. SUBMIT SIGN DESIGN FOR ENGINEER APPROVAL.
3. SIGNS SHALL BE MOUNTED NEAR THE REMOTE PUMPING CENTER, FINAL LOCATION PER ENGINEER DIRECTION.
4. SIGNS STAND SHALL BE SIMILAR TO THE LIFE RING STAND, SEE DTL. INSTALL SIGNS WITH (4) MIN. ⅜"ø 316 SS MOUNTING BOLTS WITH NYLOCK NUTS AND WASHER

WASTEWATER SYSTEM SIGNAGE

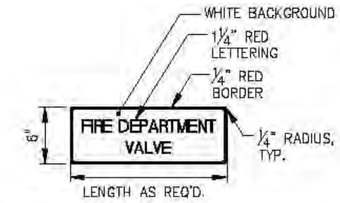

NOTE:
TYP. OF (5), MOUNT ON BULLRAIL ADJACENT TO DRY FIRE LINE VALVES w/ ¼" x 3" S.S. SCREWS w/WASHERS. FINAL LOCATION PER ENGINEER DIRECTION.

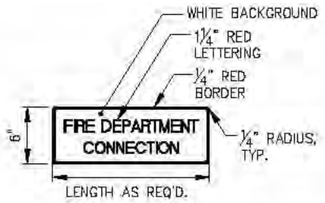

NOTE:
TYP. OF (1), MOUNT ON BULLRAIL ADJACENT TO DRY FIRE LINE INLET w/ ¼" x 3" S.S. SCREWS w/WASHERS. FINAL LOCATION PER ENGINEER DIRECTION.

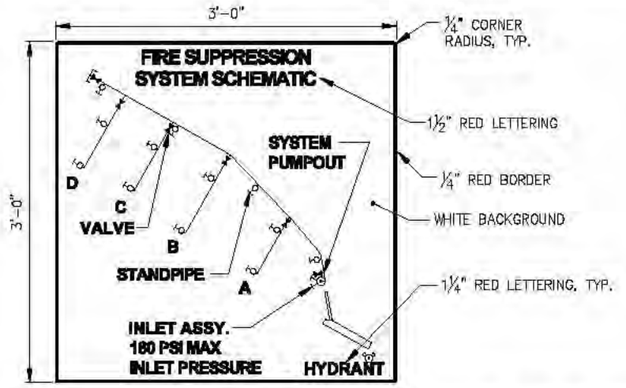

NOTE: PROVIDE (4) TO BE MOUNTED NEAR EVERY GANGWAY. FINAL LOCATIONS AND MOUNTING INSTRUCTIONS SHALL BE PER ENGINNER DIRECTION. CONTRACTOR SHALL BE PREPARED TO MOUNT SIGN TO TIMBER, STEEL OR CONCRETE.

DRY FIRE LINE SYSTEM SIGNAGE

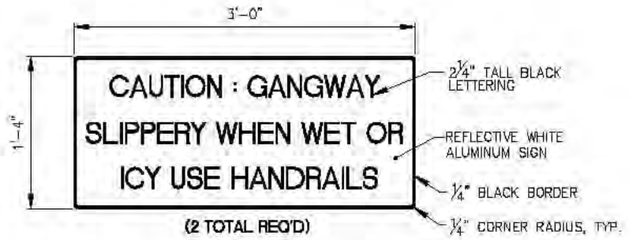

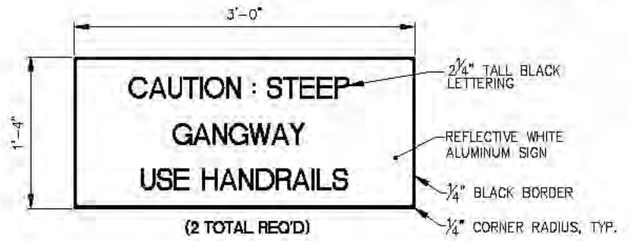

GANGWAY SIGNAGE

NOTE: MOUNT GANGWAY CAUTION SIGNS TO APPROACH DOCK SAFETY RAILS w/(3) HDG U-BOLTS, OR SIMILAR.
FINAL LOCATION PER OWNER/ENGINEER

REVISIONS

REV.	DATE	DESCRIPTION	DWN.	CKD.	APP.

PND ENGINEERS, INC.
9360 Glacier Highway, Ste. 100
Juneau, Alaska 99801
Phone: 907-586-2093
Fax: 907-586-2099
www.pndengineers.com

DESIGN: MS CHECKED: JLD
DRAWN: MS/WRB APPROVED: CRS
SCALE: NOT TO SCALE
DATE: 2/28/14

CITY & BOROUGH OF JUNEAU, ALASKA
AURORA HARBOR REBUILD - PHASE I
CONTRACT NO. DH 12-160

SHEET TITLE: SIGNAGE
PND PROJECT NO.: 122055
7.28
SHEET 128 OF 143

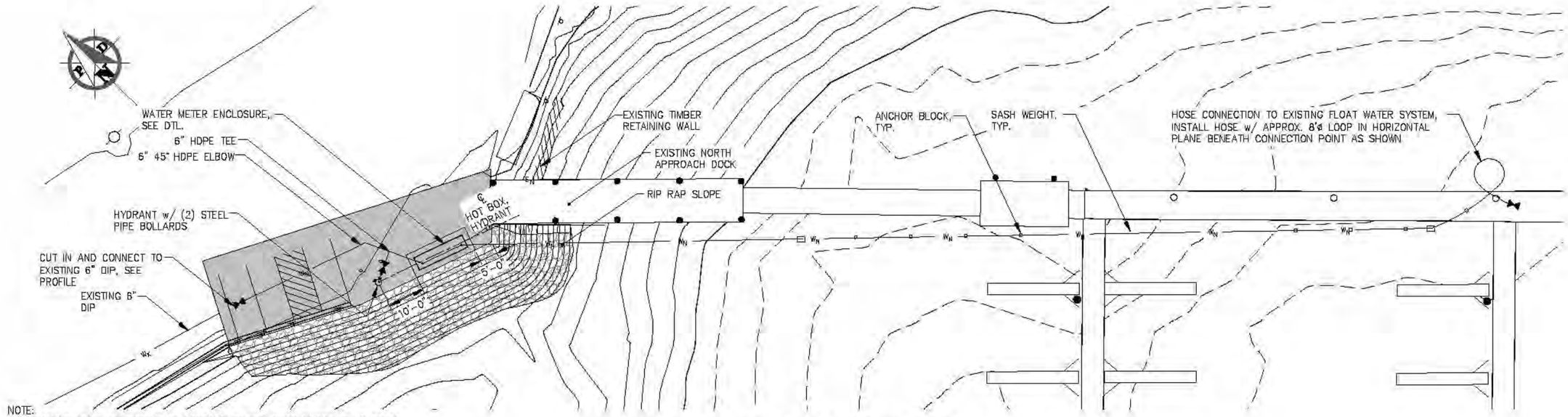

NOTE:
1. NEAREST SHUT-OFF VALVE IS LOCATED IN THE 2700 BLOCK OF GLACIER AVENUE COORDINATE WITH CBJ WATER UTILITY AS REQUIRED.
2. HYDRANT AND HYDRANT VALVE SHALL HAVE FLANGED CONNECTIONS TO THE HDPE PIPE ALL OTHER DETAILS SHALL BE IAW CBJ STD 403 AND 407.
3. HYDRANT BOLLARDS SHALL BE IAW CBJ STD. 404

NORTH APPROACH DOCK WATER SERVICE PLAN

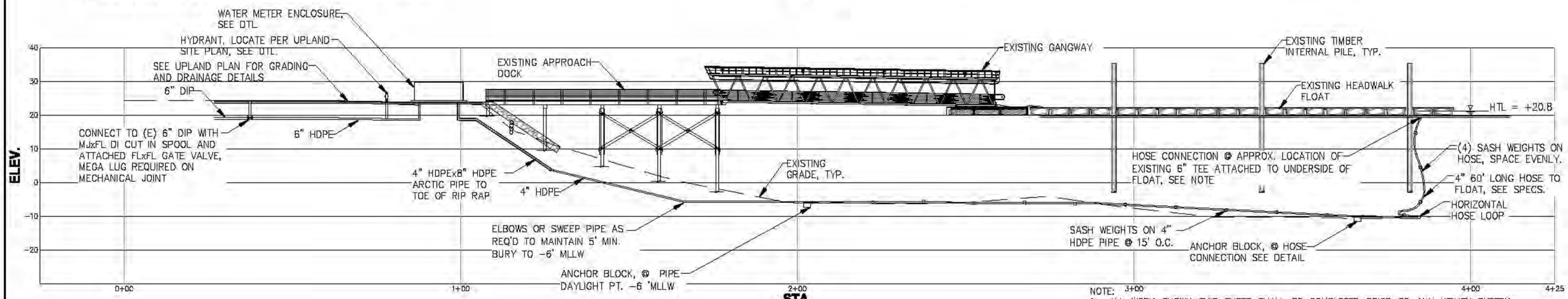

NORTH APPROACH DOCK WATER SERVICE PROFILE

NOTE:
1. ALL WORK SHOWN THIS SHEET SHALL BE COMPLETED PRIOR TO ANY UTILITY SYSTEM DEMO. ACTIVITIES.
2. EXISTING PIPE IS CONNECTED TO UNDERSIDE OF CONCRETE FLOAT WITH STEEL HANGERS AND IS SUBSTANTIALLY OBSCURED BY MARINE GROWTH. CONTRACTOR SHALL FIELD LOCATE EXISTING TEE AND REMOVE HANGERS AND PIPE AS NECESSARY TO REPLACE TEE AND APPROX. 60LF OF PE PIPE ATTACHED TO THE CONCRETE FLOAT SYSTEM.
3. CONNECTION TO HOSE ASSY. SHALL BE VIA 6x6x4 HDPE TEE w/ FLANGE ADAPTER AND 316 SS BACK UP RING. ORIENT TEE SUCH THAT HOSE CONNECTS VERTICALLY.
4. CONTRACTOR SHALL FIELD DETERMINE APPROPRIATE PIPE HANGING PLAN FOR THIS AREA AND SHALL SUBMIT HANGER PLAN TO ENGINEER FOR APPROVAL. HANGERS SHALL BE ⅜"t. HDG STEEL UNLESS OTHERWISE APPROVED. CONTRACTOR SHALL ANTICIPATE PROVIDING HANGERS @ 5' O.C.
5. HOSE SHALL BE MONITORED THROUGH MULTIPLE TIDAL CYCLES TO ENSURE NO BINDING, STRETCHING OR OTHERWISE DAMAGING CONDITIONS EXIST. UNSATISFACTORY HOSES SHALL BE RECONFIGURED OR REPLACED TO THE SATISFACTION OF THE ENGINEER AT NO COST TO THE OWNER.

DIAL BEFORE YOU DIG!
586-1333
UNDERGROUND POWER, TELEPHONE, T.V., COMMUNICATIONS, WATER AND WASTEWATER LINES ARE IN THE AREA. UTILITIES SHOWN HERE DO NOT SUBSTITUTE FOR FIELD LOCATES.

REVISIONS

REV.	DATE	DESCRIPTION	DWN.	CKD.	APP.

PND ENGINEERS, INC.
9360 Glacier Highway, Ste. 100
Juneau, Alaska 99801
Phone: 907-586-2093
Fax: 907-586-2099
www.pndengineers.com

DESIGN: TCB CHECKED: JLD
DRAWN: TCB APPROVED: CRS
SCALE: SCALE IN FEET 0 15 30 FT.
DATE: 2/28/14

STATE OF ALASKA — John L. Dekuth — 12-8547 — REGISTERED PROFESSIONAL ENGINEER

CITY & BOROUGH OF JUNEAU, ALASKA
AURORA HARBOR REBUILD - PHASE I
CONTRACT NO. DH 12-160

SHEET TITLE:
NORTH APPROACH DOCK WATERLINE PLAN AND PROFILE

PND PROJECT NO.: 122055

8.01
SHEET 129 OF 143

LEGEND		
SYMBOL	DESCRIPTION	QUANTITY
⋈	VALVE	SEE DETAILS
●—	WATER PEDESTAL	19
⊘—	FIRE STANDPIPE	12
⊠	FIRE EXTINGUISHER & LIFE RING	17 & 15
FW_N	4" FIRE LINE	1900 LF
W_N	WATERLINE (SIZE VARIES)	2700 LF
W_X	EXISTING WATER MAIN	N/A
EXP.	EXPANSION LOOP	8

GENERAL UTILITY NOTES:

1. WATER AND FIRE SYSTEM APPURTENANCES SHOWN APPROXIMATE LOCATE UTILITIES ACCORDING TO FLOAT DRAWINGS AND PER ENGINEER DIRECTION.
2. QUANTITIES ARE ESTIMATED FOR REFERENCE PURPOSES ONLY, IT IS THE RESPONSIBILITY OF THE CONTRACTOR TO VERIFY ALL QUANTITIES PRIOR TO MATERIAL ORDER.
3. NOT ALL FITTINGS AND VARIOUS PLUMBING APPURTENANCES ARE SHOWN IN THESE DRAWINGS. CONTRACTOR SHALL USE INDUSTRY STANDARD PRACTICES TO ACHIEVE ALL CONNECTIONS AND TRANSITIONS NOT SPECIFIED CONSISTENT WITH LOCAL, STATE AND FEDERAL REGULATIONS, AND PER ENGINEER DIRECTION.
4. FIRE EXTINGUISHER AND LIFE RING CABINETS SHALL BE MOUNTED TOGETHER TO THE EXTENT PRACTICABLE PER ENGINEER DIRECTION.

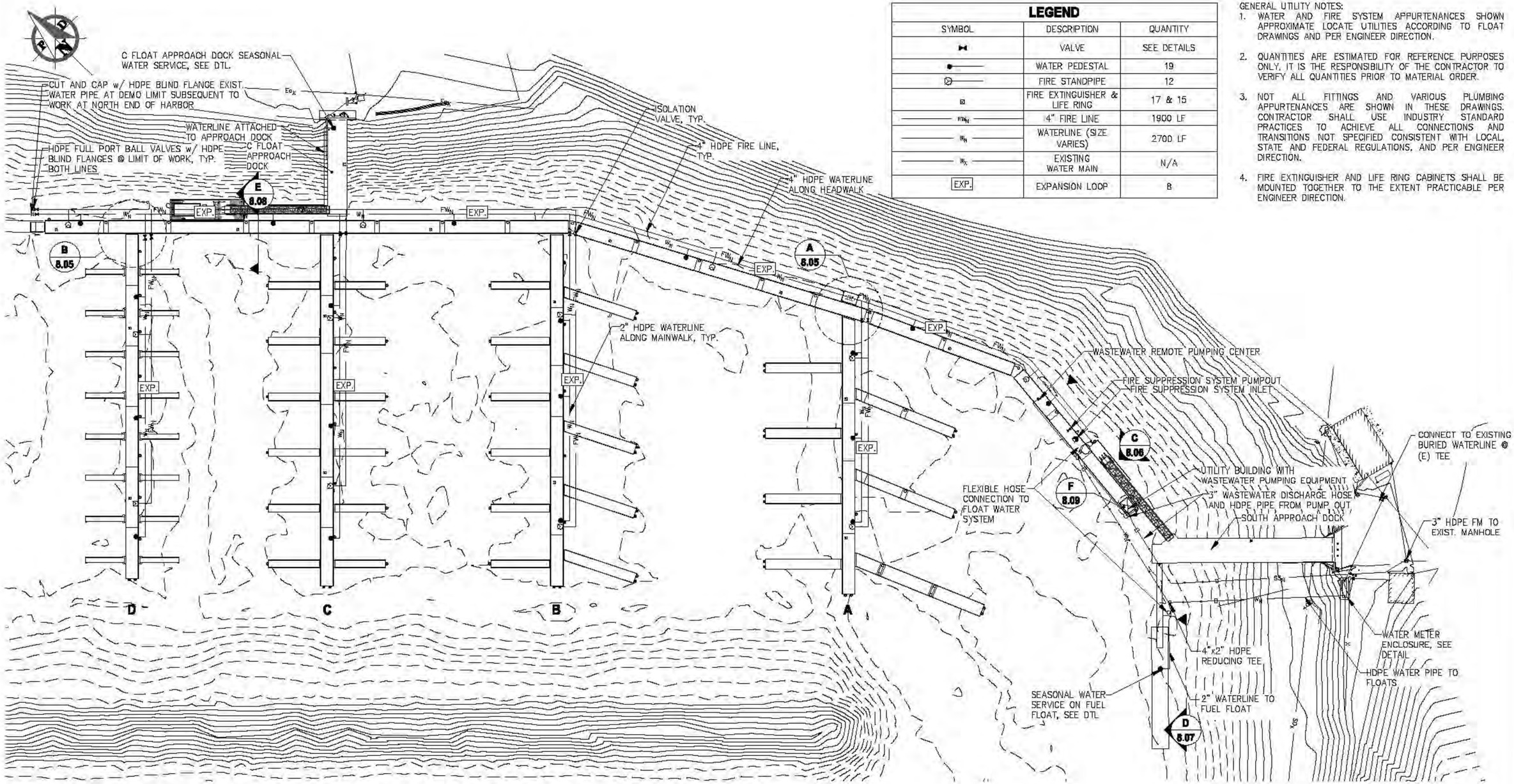

UTILITIES GENERAL SITE PLAN

REVISIONS

REV.	DATE	DESCRIPTION	DWN.	CKD.	APP.

PND ENGINEERS, INC.
9360 Glacier Highway, Ste. 100
Juneau, Alaska 99801
Phone: 907-586-2093
Fax: 907-586-2099
www.pndengineers.com

DESIGN: TCB CHECKED: JLD
DRAWN: TCB APPROVED: CRS
SCALE: SCALE IN FEET 0 40 80 FT.
DATE: 2/28/14

CITY & BOROUGH OF JUNEAU, ALASKA
AURORA HARBOR REBUILD - PHASE I
CONTRACT NO. DH 12-160

SHEET TITLE: UTILITY SYSTEMS SOUTH GENERAL SITE PLAN
PND PROJECT NO.: 122055
8.02
SHEET 130 OF 143

NOTE:
1. AS-BUILT DATA ON THE CONFIGURATION OF WATER PIPING IN THIS AREA VARIES, FIELD VERIFY PIPING CONFIGURATION AND MAKE CONNECTION TO EXISTING PIPES PER ENGINEER DIRECTION.
2. UPLAND VALVES SHALL BE IAW CBJ STD 407 EXCEPT AS NOTED.
3. PROFILE VIEW DISPLAYS 4" WATERLINE IN FOREGROUND, 3" WASTEWATER LINE IN BACK GROUND SHALL BE SIMILAR EXCEPT AS NOTED.
4. 2" FLEXIBLE WATER HOSE SHALL BE 65' LONG AND SHALL BE INSTALLED WITH 4 SASH WEIGHTS EVENLY SPACED ON HOSE DETAILS NOT SPECIFIED SHALL BE SIMILAR TO 4" WATER HOSE.
5. HYDRANT AND HYDRANT VALVE SHALL HAVE FLANGED CONNECTIONS TO THE HDPE PIPE ALL OTHER DETAILS SHALL BE IAW CBJ STD 403 AND 407.
6. HYDRANT BOLLARDS SHALL BE IAW CBJ STD. 404
7. *DIMENSION SHOWN IS RELATIVE TO THE VIEW, ANCHOR BLOCK SHALL BE APPROX. 20' HORIZONALLY FROM FLOAT CONNECTION FOR ALL HOSE CONNECTIONS.
8. HOSES SHALL BE MONITORED THROUGH MULTIPLE TIDAL CYCLES TO ENSURE NO BINDING, STRETCHING OR OTHERWISE DAMAGING CONDITIONS EXIST. UNSATISFACTORY HOSES SHALL BE RECONFIGURED OR REPLACED TO THE SATISFACTION OF THE ENGINEER AT NO COST TO THE OWNER.

DIAL BEFORE YOU DIG!
586-1333
UNDERGROUND POWER, TELEPHONE, T.V., COMMUNICATIONS, WATER AND WASTEWATER LINES ARE IN THE AREA. UTILITIES SHOWN HERE DO NOT SUBSTITUTE FOR FIELD LOCATES.

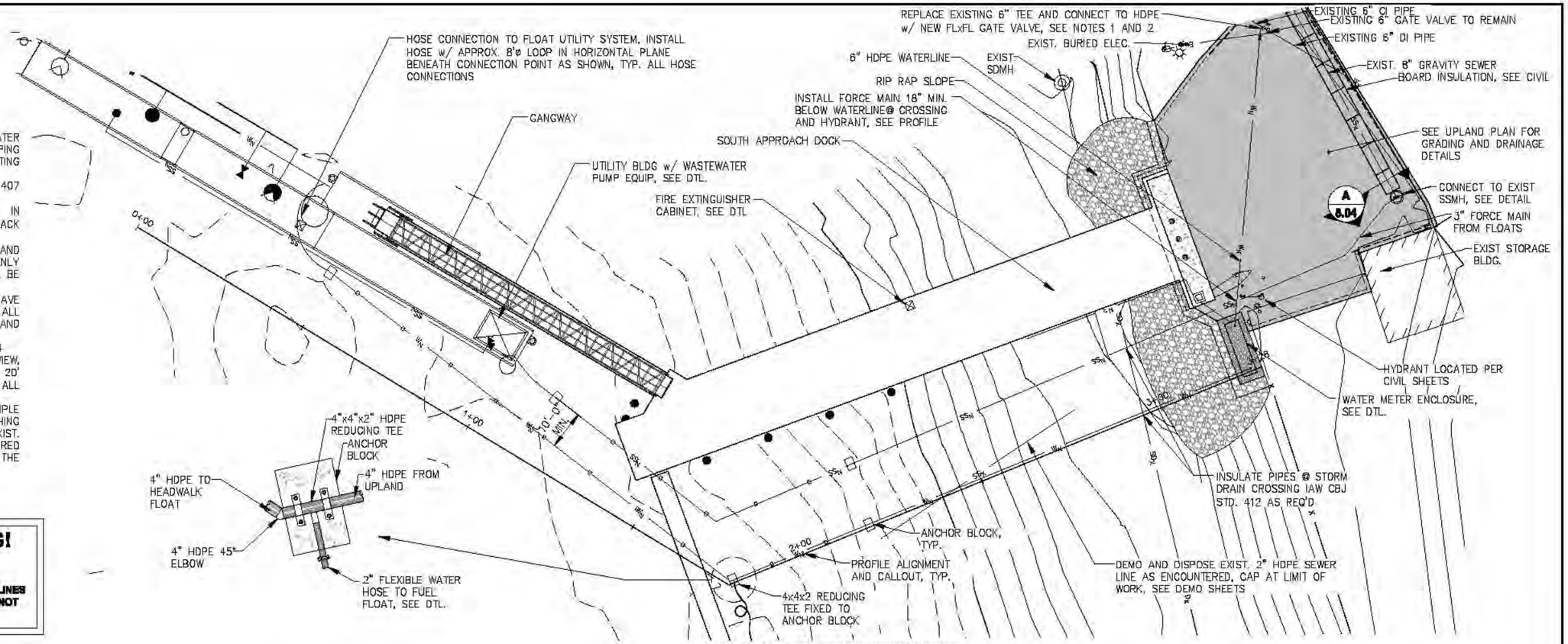

SOUTH APPROACH DOCK UTILITIES
PLAN

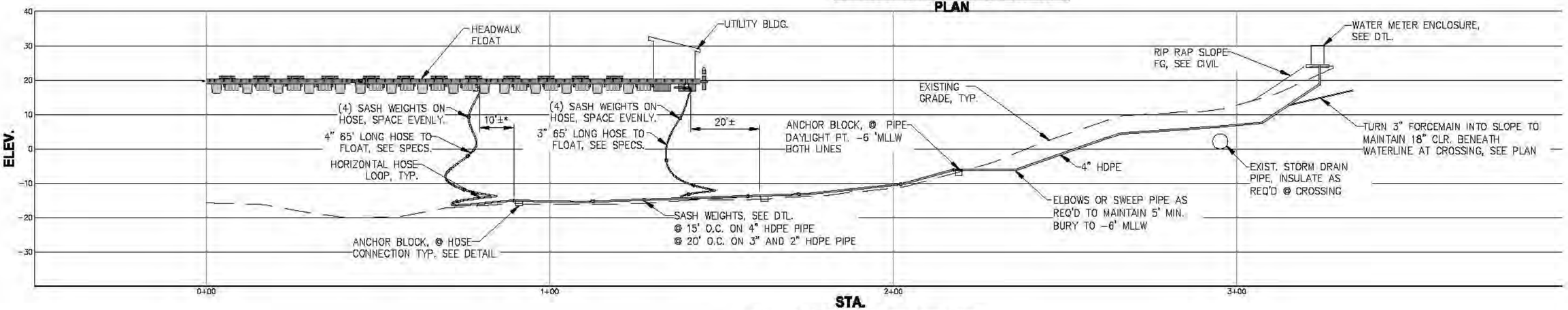

SOUTH APPROACH DOCK UTILITIES
PROFILE

REVISIONS

REV.	DATE	DESCRIPTION	DWN.	CKD.	APP.

PND ENGINEERS, INC.
9360 Glacier Highway, Ste. 100
Juneau, Alaska 99801
Phone: 907-586-2093
Fax: 907-586-2099
www.pndengineers.com

DESIGN: TCB CHECKED: JLD
DRAWN: TCB APPROVED: CRS
SCALE: SCALE IN FEET 0 15 30 FT.
DATE: 2/28/14

STATE OF ALASKA — 49TH — John L. Dekuth CC-8847 — REGISTERED PROFESSIONAL CIVIL ENGINEER

CITY & BOROUGH OF JUNEAU, ALASKA
AURORA HARBOR REBUILD - PHASE I
CONTRACT NO. DH 12-160

SHEET TITLE:
SOUTH APPROACH UTILITIES PLAN AND PROFILE
PND PROJECT NO.: 122055

8.03
SHEET 131 OF 143

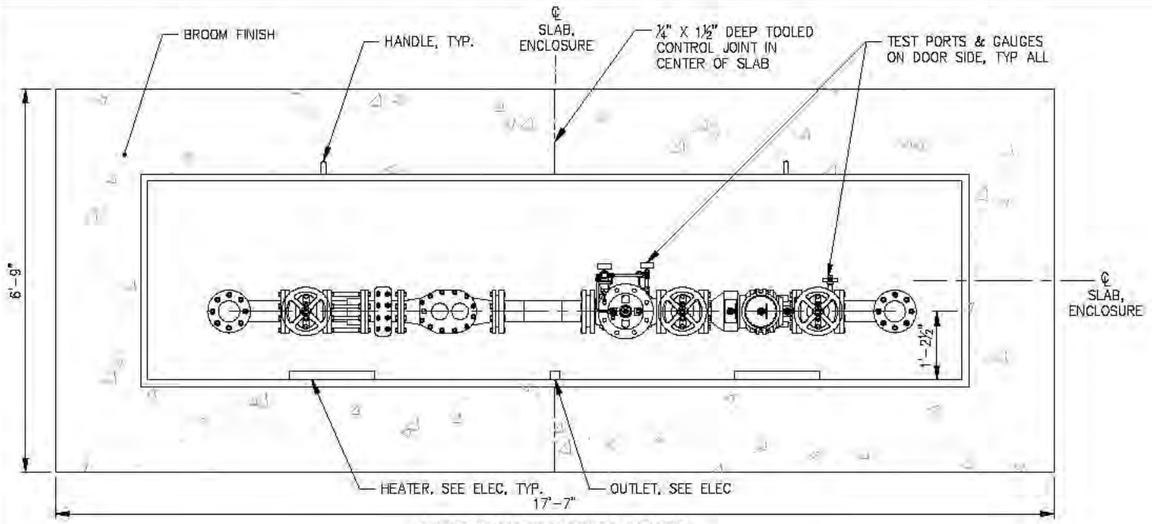

WATER METER ENCLOSURE PLAN

DESIGNATION	COMPONENT DESCRIPTION
A	4" HDPE 90° ELBOW w/ FLANGE ADAPTERS & HDG BACKUP RING
B	4" NRS GATE VALVE
C	4" DISMANTLING JOINT, SET TO 8" ±
D	4" METER w/ STRAINER
E	4" HDPE PIPE SPOOL
F	4" AUTOMATIC CONTROL VALVE
G	4" REDUCED PRESSURE ZONE ASSY. BACKFLOW PREVENTOR

NOTE:
SEE SPECIFICATIONS FOR COMPONENT REQUIREMENTS

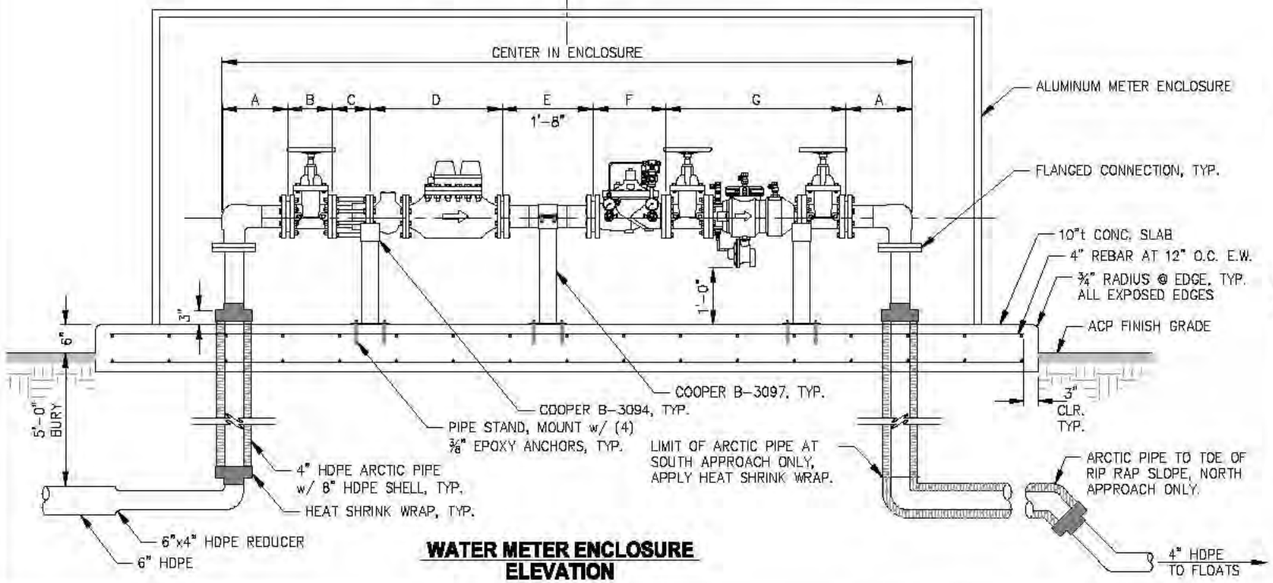

WATER METER ENCLOSURE ELEVATION

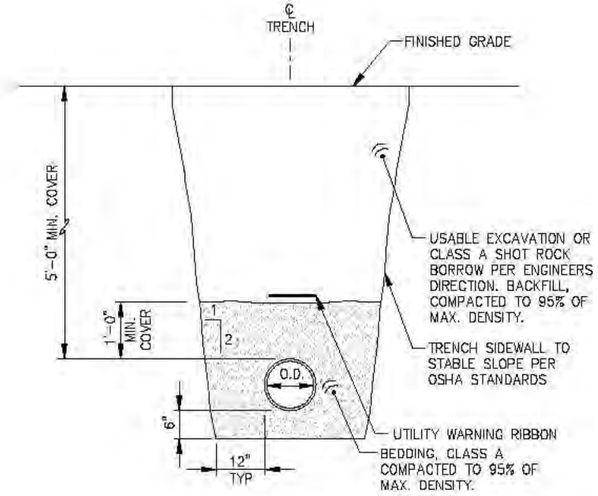

PIPE TRENCH TYPICAL SECTION

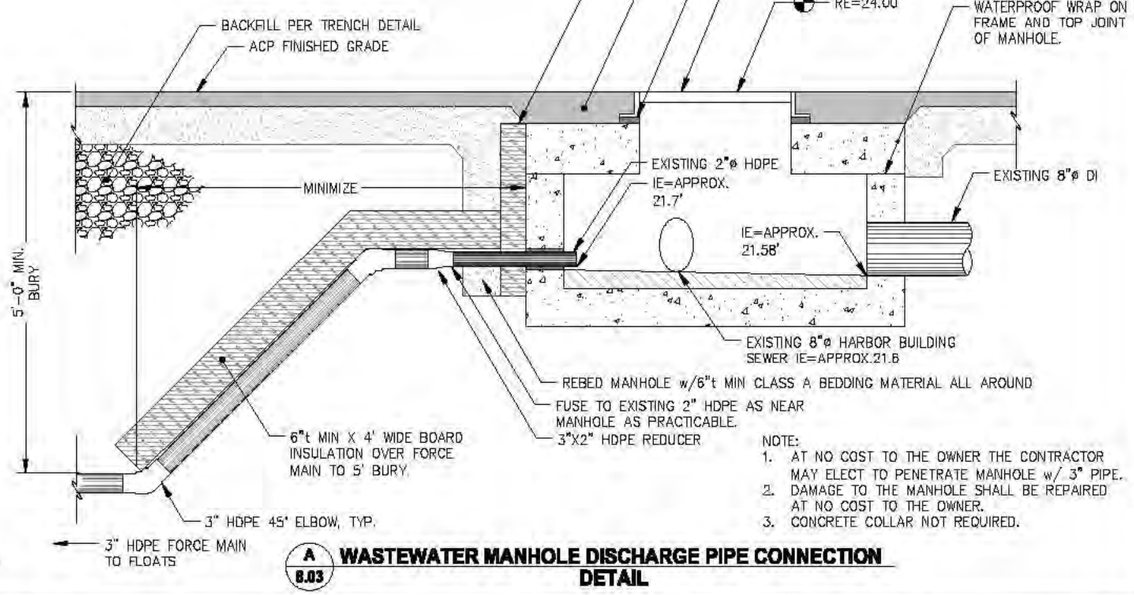

NOTE:
1. AT NO COST TO THE OWNER THE CONTRACTOR MAY ELECT TO PENETRATE MANHOLE w/ 3" PIPE.
2. DAMAGE TO THE MANHOLE SHALL BE REPAIRED AT NO COST TO THE OWNER.
3. CONCRETE COLLAR NOT REQUIRED.

A 8.03 **WASTEWATER MANHOLE DISCHARGE PIPE CONNECTION DETAIL**

REVISIONS

REV.	DATE	DESCRIPTION	DWN.	CKD.	APP.

P N D ENGINEERS, INC.
9360 Glacier Highway, Ste. 100
Juneau, Alaska 99801
Phone: 907-586-2093
Fax: 907-586-2099
www.pndengineers.com

DESIGN: TCB CHECKED: JLD
DRAWN: WRB APPROVED: CRS
SCALE: NTS
DATE: 2/28/14

STATE OF ALASKA — REGISTERED PROFESSIONAL ENGINEER — John L. DeMuth CE-8847

CITY & BOROUGH OF JUNEAU, ALASKA
AURORA HARBOR REBUILD - PHASE I
CONTRACT NO. DH 12-160

SHEET TITLE: **UTILITY SYSTEMS UPLAND DETAILS**

PND PROJECT NO.: 122055

8.04

SHEET 132 OF 143

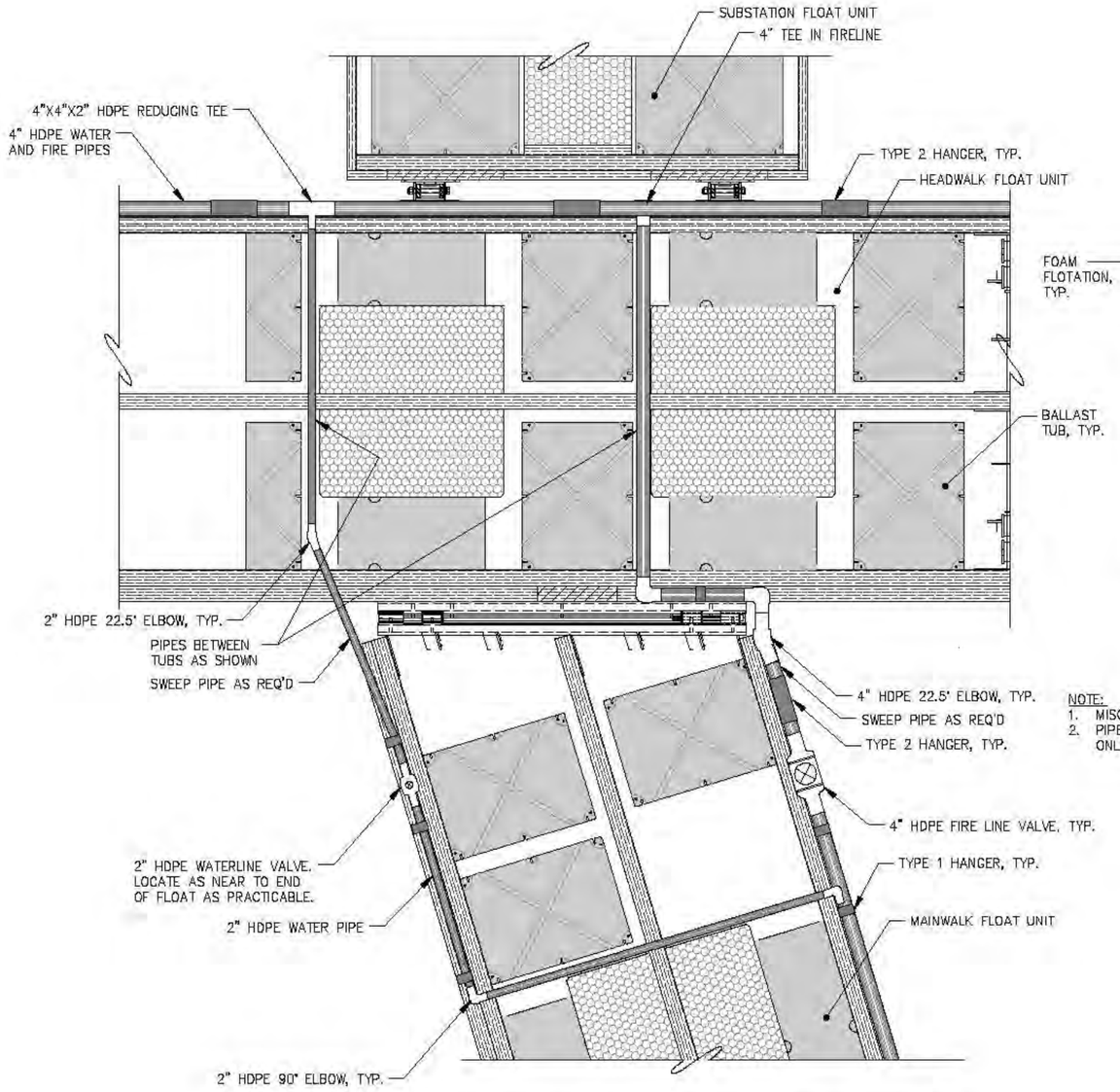

NOTE:
1. MISC. FLOAT HARDWARE NOT SHOWN FOR CLARITY.
2. PIPES SHOWN ON TOP OF FLOATS FOR CLARITY ONLY, SEE PIPE MOUNTING DETAIL.

A 8.02 HEADWALK/MAINWALK A INTERSECTION UTILITY ROUTING DETAIL

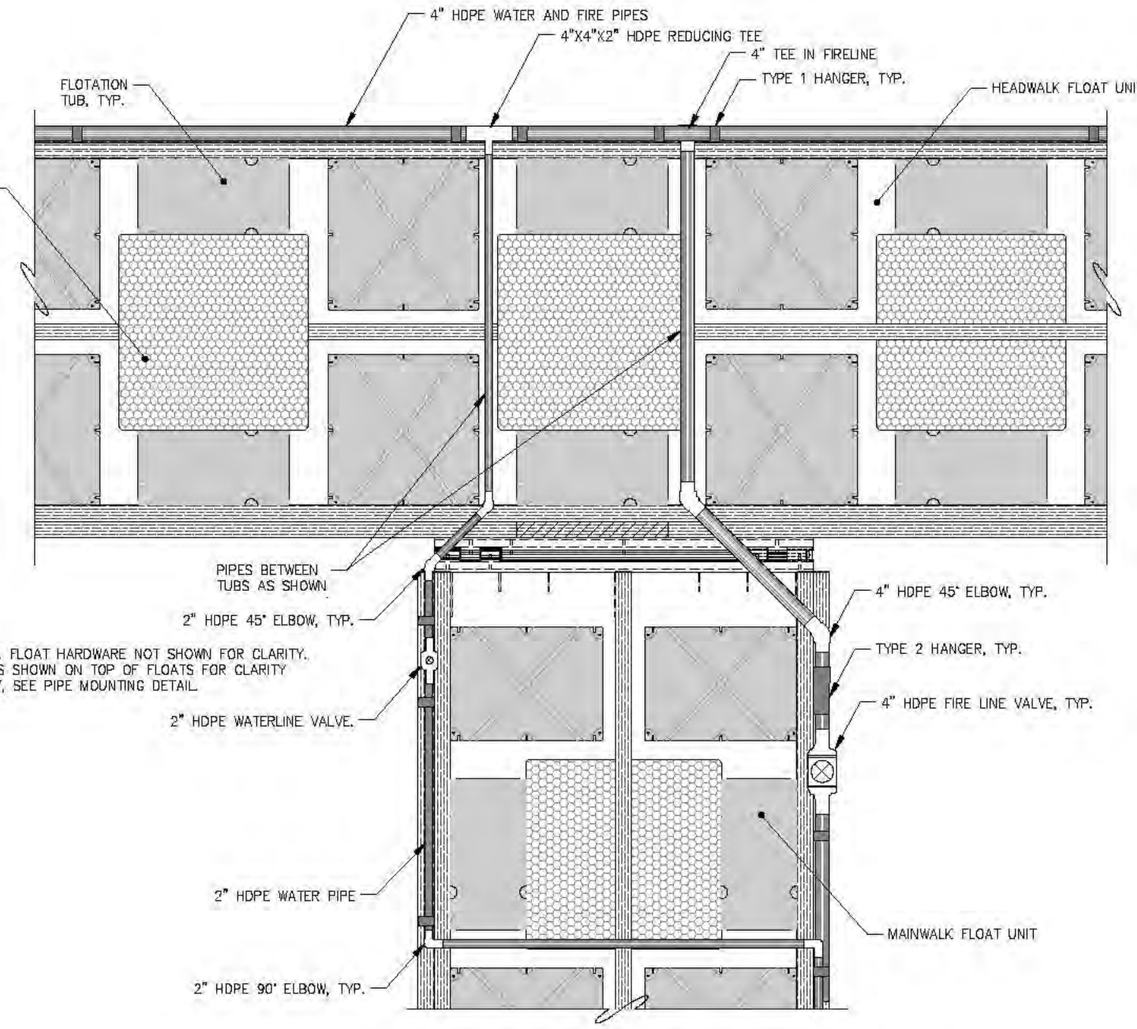

B 8.02 HEADWALK/MAINWALK D INTERSECTION UTILITY ROUTING DETAIL

NOTE:
MAINWALK D SHOWN, MAINWALKS B AND C SHALL BE SIMILAR.

REVISIONS

REV.	DATE	DESCRIPTION	DWN.	CKD.	APP.

PND ENGINEERS, INC.
9360 Glacier Highway, Ste. 100
Juneau, Alaska 99801
Phone: 907-586-2093
Fax: 907-586-2099
www.pndengineers.com

DESIGN: TCB CHECKED: JLD
DRAWN: TCB APPROVED: CRS
SCALE: NTS
DATE: 2/28/14

STATE OF ALASKA — 49TH — John L. Dellaria — CE-8847 — REGISTERED PROFESSIONAL ENGINEER

CITY & BOROUGH OF JUNEAU, ALASKA
AURORA HARBOR REBUILD - PHASE I
CONTRACT NO. DH 12-160

SHEET TITLE: UTILITY ROUTING DETAILS

PND PROJECT NO.: 122055

8.05
SHEET 133 OF 143

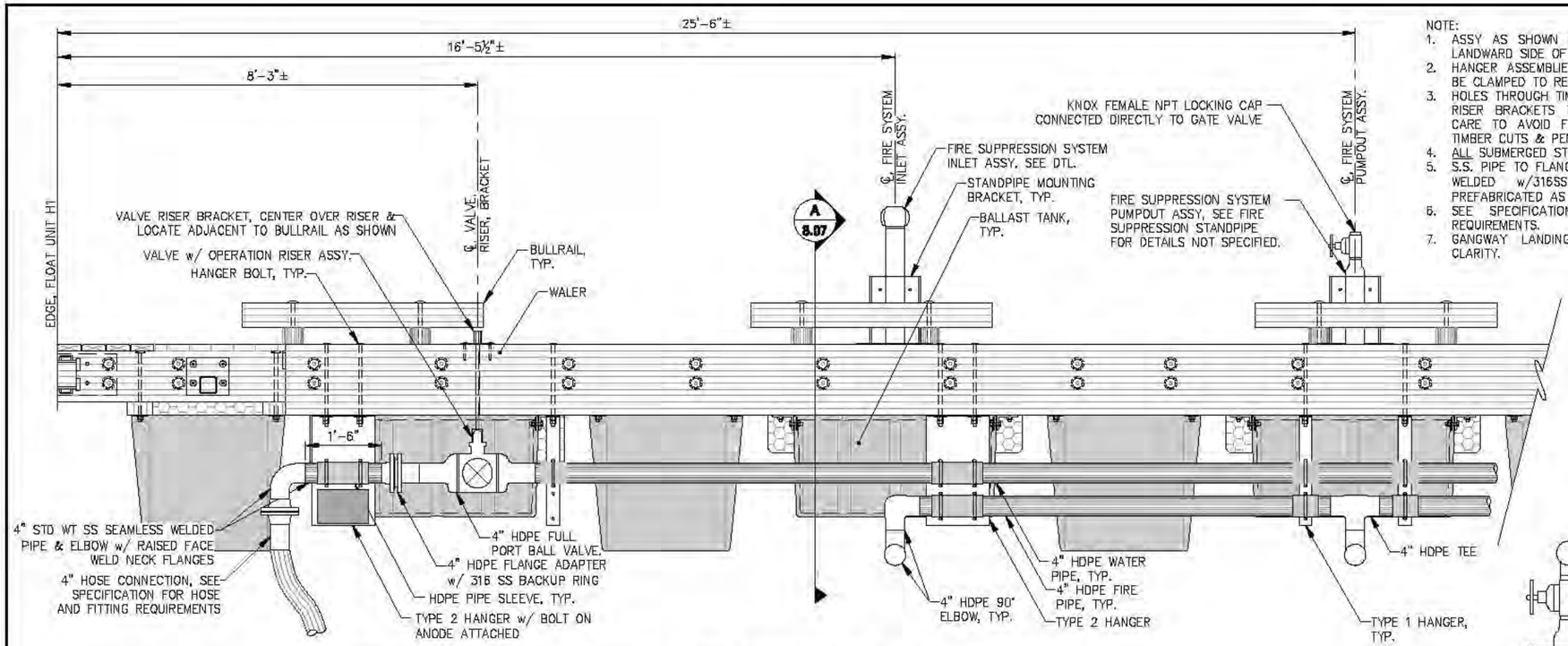

NOTE:
1. ASSY AS SHOWN SHALL BE LOCATED ON THE LANDWARD SIDE OF FLOAT UNIT H-1.
2. HANGER ASSEMBLIES SHOWN THIS DETAIL SHALL BE CLAMPED TO RESTRICT PIPE MOVEMENT.
3. HOLES THROUGH TIMBER FOR HANGER BOLTS AND RISER BRACKETS TO BE FIELD DRILLED, TAKE CARE TO AVOID FLOAT HARDWARE, TREAT ALL TIMBER CUTS & PENETRATIONS SPECIFICATIONS.
4. ALL SUBMERGED STEEL SHALL BE 316 S.S. UNO.
5. S.S. PIPE TO FLANGE JOINTS SHALL BE FACTORY WELDED w/316SS ROD. PROVIDE SPOOLS PREFABRICATED AS SHOWN.
6. SEE SPECIFICATIONS FOR HOSE & FITTING REQUIREMENTS.
7. GANGWAY LANDING FLOAT NOT SHOWN FOR CLARITY.

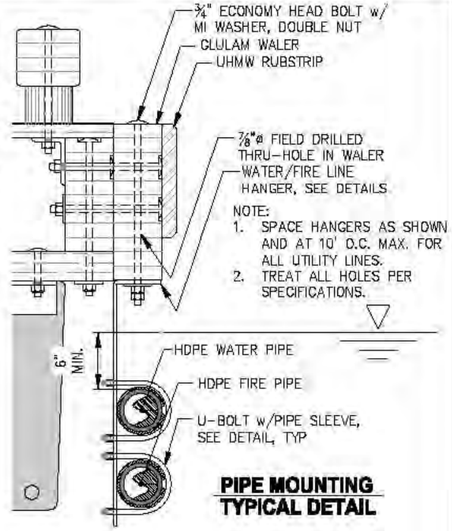

NOTE:
1. SPACE HANGERS AS SHOWN AND AT 10' O.C. MAX. FOR ALL UTILITY LINES.
2. TREAT ALL HOLES PER SPECIFICATIONS.

PIPE MOUNTING TYPICAL DETAIL

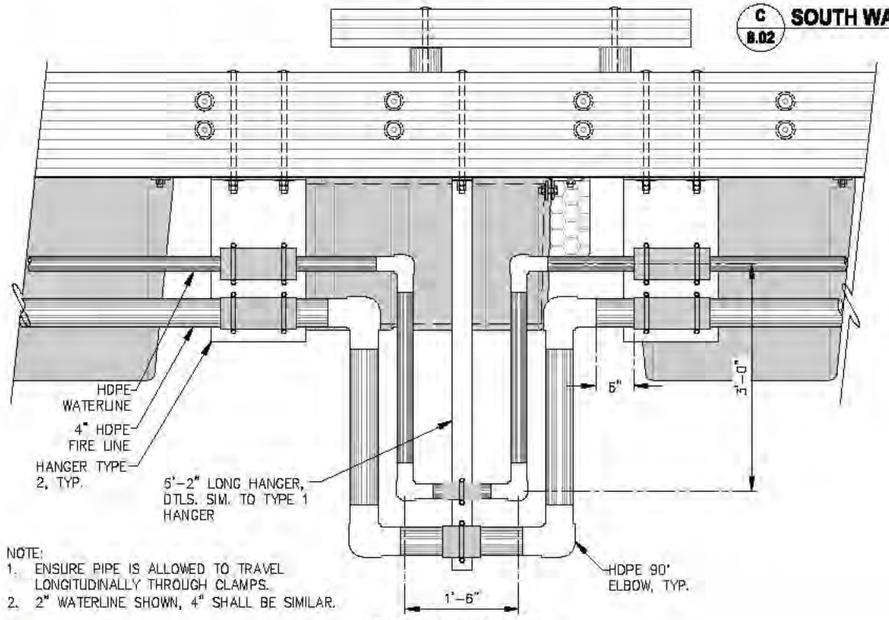

NOTE:
1. ENSURE PIPE IS ALLOWED TO TRAVEL LONGITUDINALLY THROUGH CLAMPS.
2. 2" WATERLINE SHOWN, 4" SHALL BE SIMILAR.

EXPANSION LOOP TYPICAL DETAIL

C 8.02 **SOUTH WATERLINE HOSE CONNECTION DETAIL**

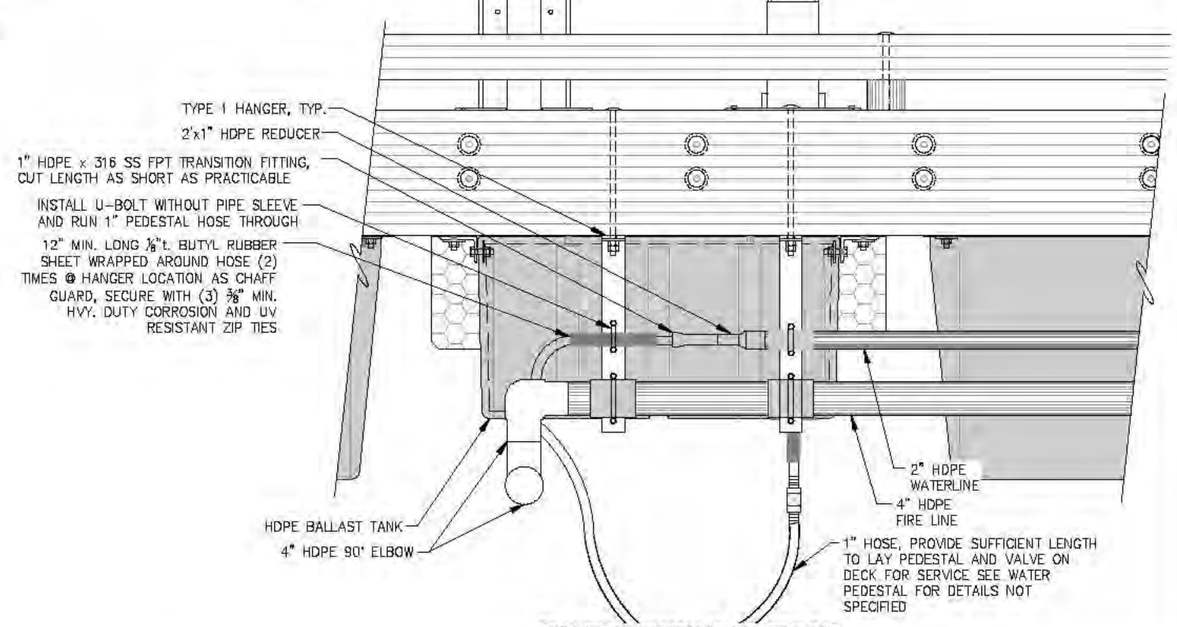

END OF MAINWALK WATERLINE TYPICAL DETAIL

CITY & BOROUGH OF JUNEAU DOCKS & HARBORS

REVISIONS

REV.	DATE	DESCRIPTION	DWN.	CKD.	APP.

PND ENGINEERS, INC.
9360 Glacier Highway, Ste. 100
Juneau, Alaska 99801
Phone: 907-586-2093
Fax: 907-586-2099
www.pndengineers.com

DESIGN: TCB CHECKED: JLD
DRAWN: TCB APPROVED: CRS
SCALE: NTS
DATE: 2/28/14

STATE OF ALASKA — JOHN L. DeMOTH — CE-8847 — REGISTERED PROFESSIONAL ENGINEER

CITY & BOROUGH OF JUNEAU, ALASKA
AURORA HARBOR REBUILD - PHASE I
CONTRACT NO. DH 12-160

SHEET TITLE: **UTILITY DETAILS**

PND PROJECT NO.: 122055

8.06
SHEET 134 OF 143

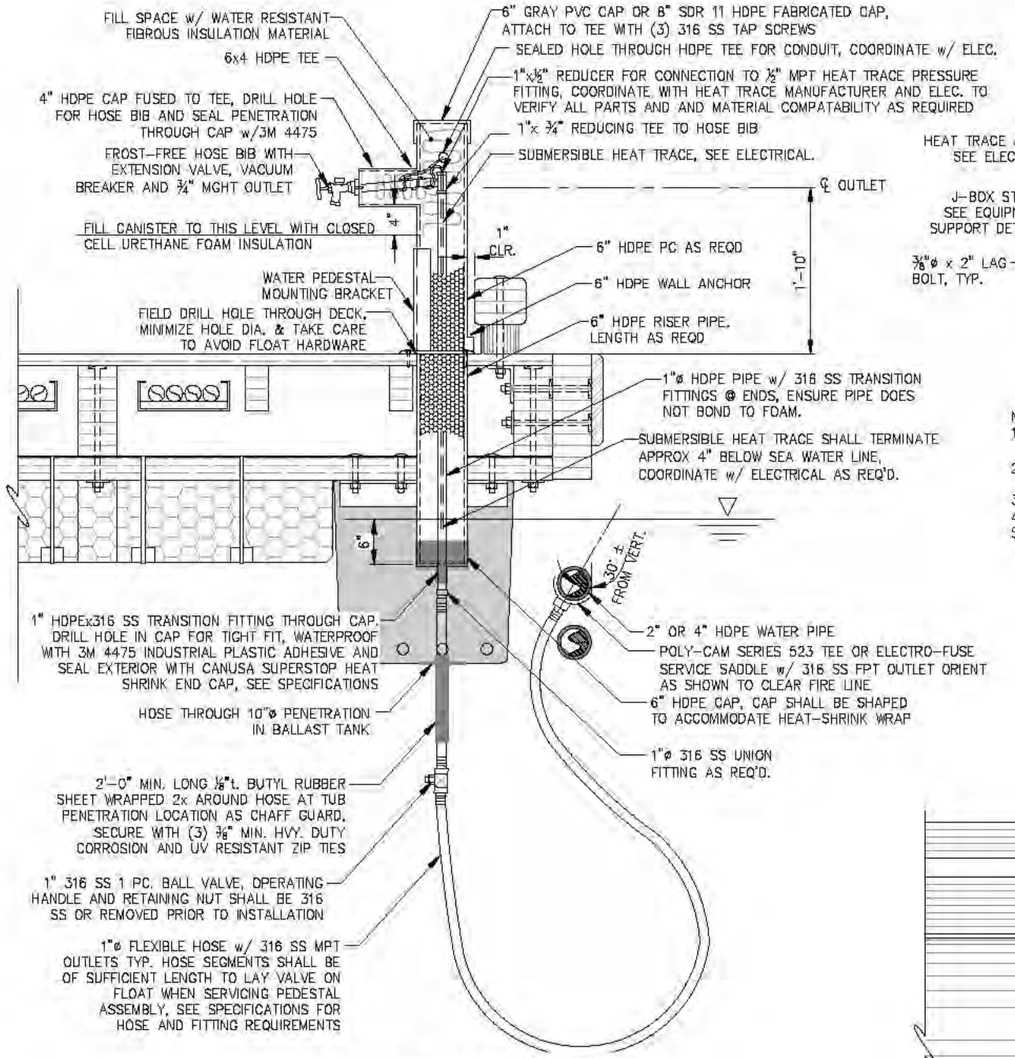

WATER PEDESTAL TYPICAL DETAIL

NOTE:
1. HOSE BIB SHOWN IN PROFILE FOR ILLUSTRATIVE PURPOSES ONLY, ORIENT HOSE BIB PARALLEL WITH BULLRAIL.
2. HANGER AND CONNECTION HARDWARE NOT SHOWN FOR CLARITY.
3. ALL SUBMERGED STEEL HARDWARE SHALL BE CONSTRUCTED OF 316 SS, UNO.
4. PRESSURE TESTS SHALL BE COMPLETED AFTER HEAT TRACE HAS BEEN INSTALLED, VERIFY 150 PSI MIN HEAT TRACE PRESSURE FITTING w/ ELECTRIC.
5. LOCATE PEDESTALS PER FLOAT PLAN.

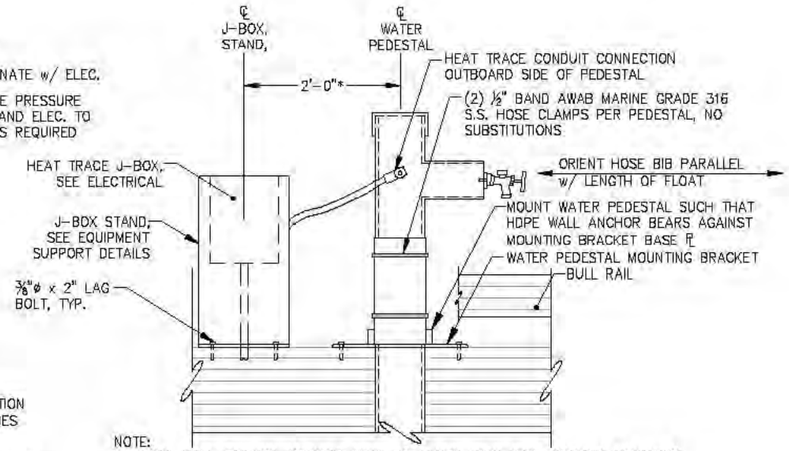

NOTE:
1. TRIM WALL ANCHOR BEARING RING TO FLUSH WITH PIPE AROUND MOUNTING BRACKET VERT. ℄.
2. 1"x1" SEMI-RING MAY BE WELDED TO RISER PIPE IN LIEU OF HDPE WALL ANCHOR, SUBMIT WELDING METHOD FOR ENGINEER APPROVAL.
3. EF FLEX RESTRAINT MAY BE BE USED FOR BEARING IN LIEU OF WALL ANCHOR.
4. TRIM JOINT BEADS AS REQ'D.
5. *DISTANCE MAY VARY, LOCATE J-BOX TO SIDE AWAY FROM NEAREST STALL UNLESS OTHERWISE RESTRICTED AND PER ENGINEER DIRECTION

WATER PEDESTAL MOUNTING TYPICAL DETAIL

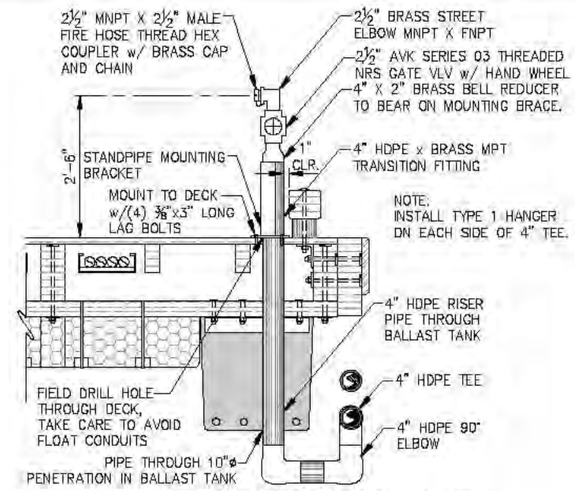

FIRE SUPPRESSION STANDPIPE TYPICAL DETAIL

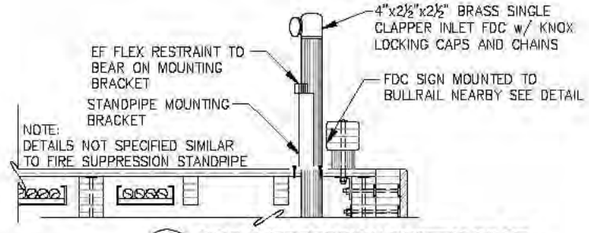

A 8.08 FIRE SUPPRESSION SYSTEM INLET DETAIL

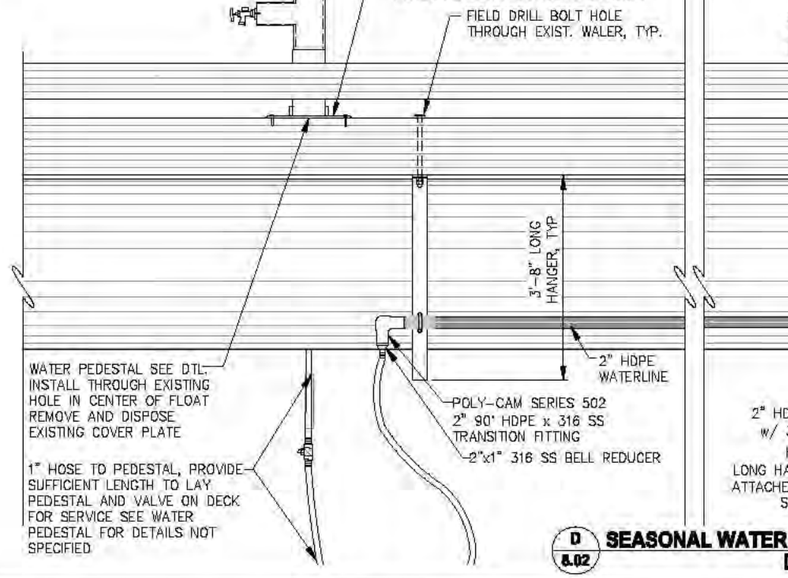

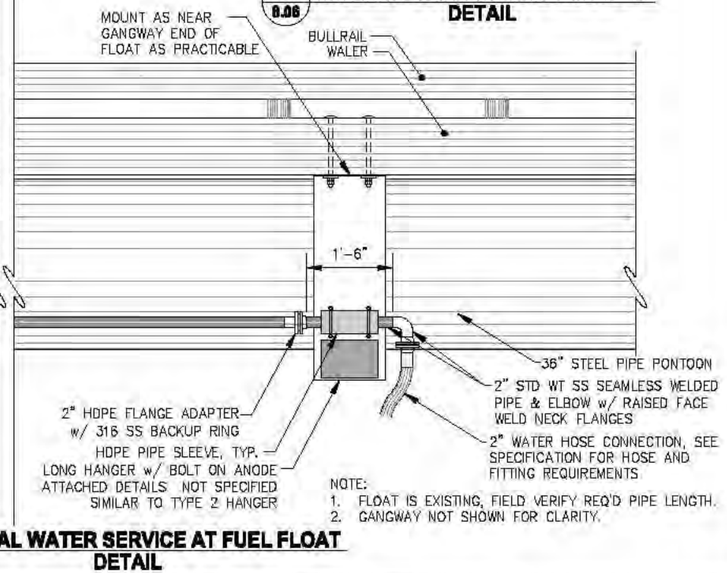

NOTE:
1. FLOAT IS EXISTING, FIELD VERIFY REQ'D PIPE LENGTH.
2. GANGWAY NOT SHOWN FOR CLARITY.

D 8.02 SEASONAL WATER SERVICE AT FUEL FLOAT DETAIL

REVISIONS

REV.	DATE	DESCRIPTION	DWN.	CKD.	APP.

PND ENGINEERS, INC.
9360 Glacier Highway, Ste. 100
Juneau, Alaska 99801
Phone: 907-586-2093
Fax: 907-586-2099
www.pndengineers.com

DESIGN: TCB CHECKED: JLD
DRAWN: TCB APPROVED: CRS
SCALE: NTS

STATE OF ALASKA — John L. Dekuyper — CC-8847 — REGISTERED PROFESSIONAL ENGINEER
DATE: 2/28/14

CITY & BOROUGH OF JUNEAU, ALASKA
AURORA HARBOR REBUILD - PHASE I
CONTRACT NO. DH 12-160

SHEET TITLE: **UTILITY DETAILS**

PND PROJECT NO.: 122055

8.07

SHEET 135 OF 143

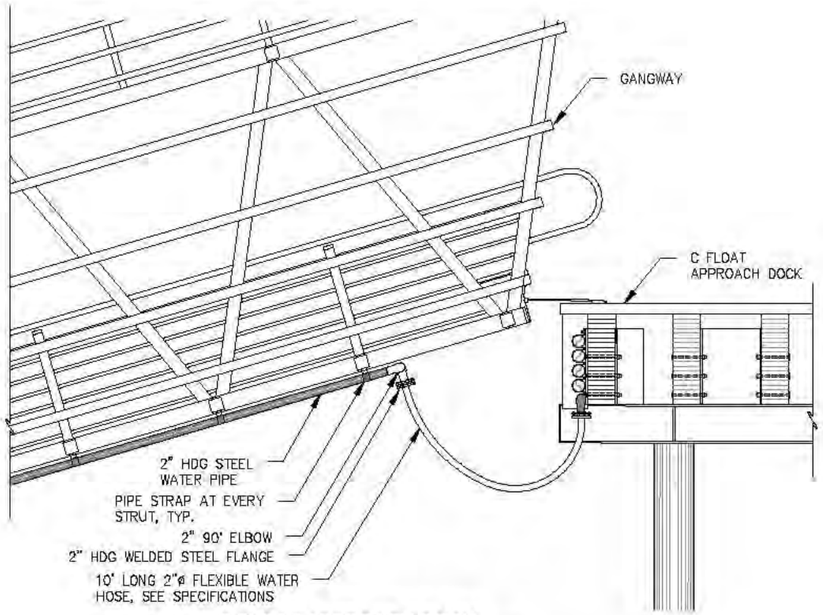

C FLOAT APPROACH DOCK HOSE CONNECTION DETAIL

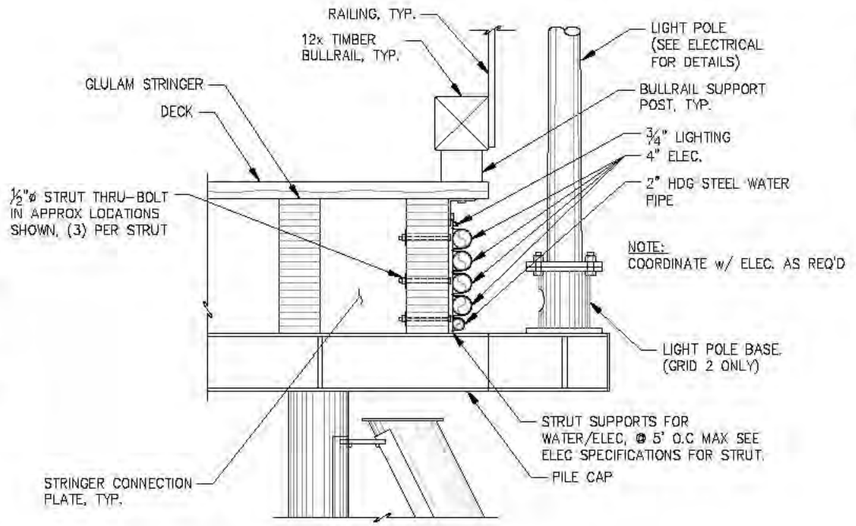

C FLOAT APPROACH DOCK TYPICAL UTILITY SUPPORT DETAIL

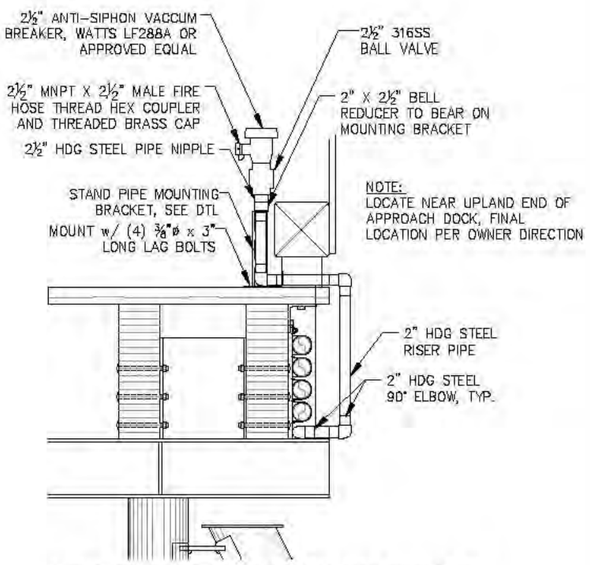

C FLOAT APPROACH DOCK WATER SERVICE DETAIL

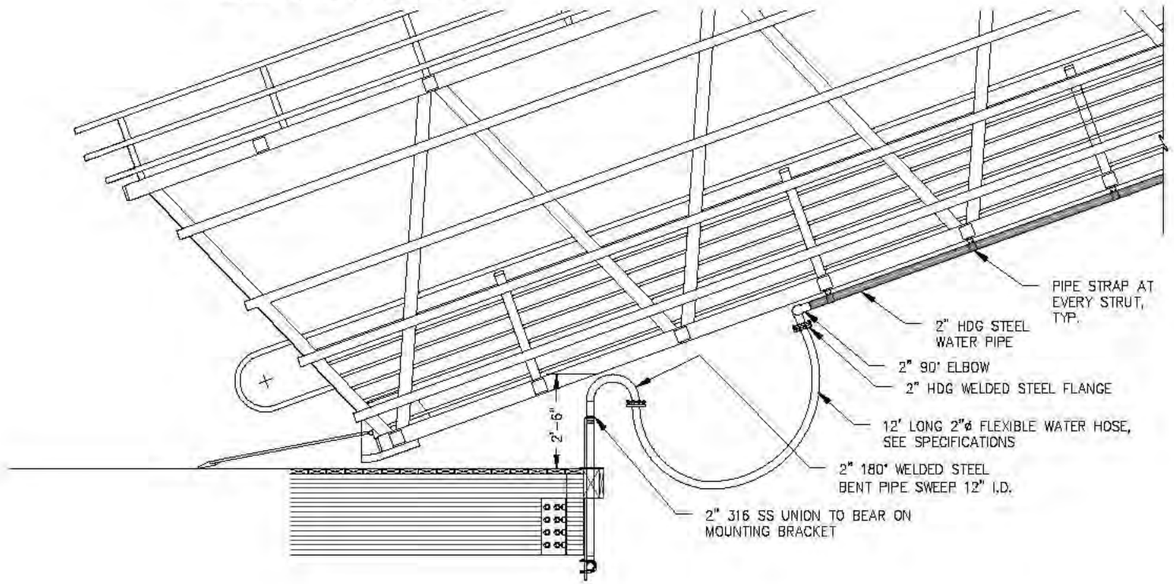

A - **HOSE CONNECTION DETAIL AT C FLOAT GANGWAY LANDING FLOAT**

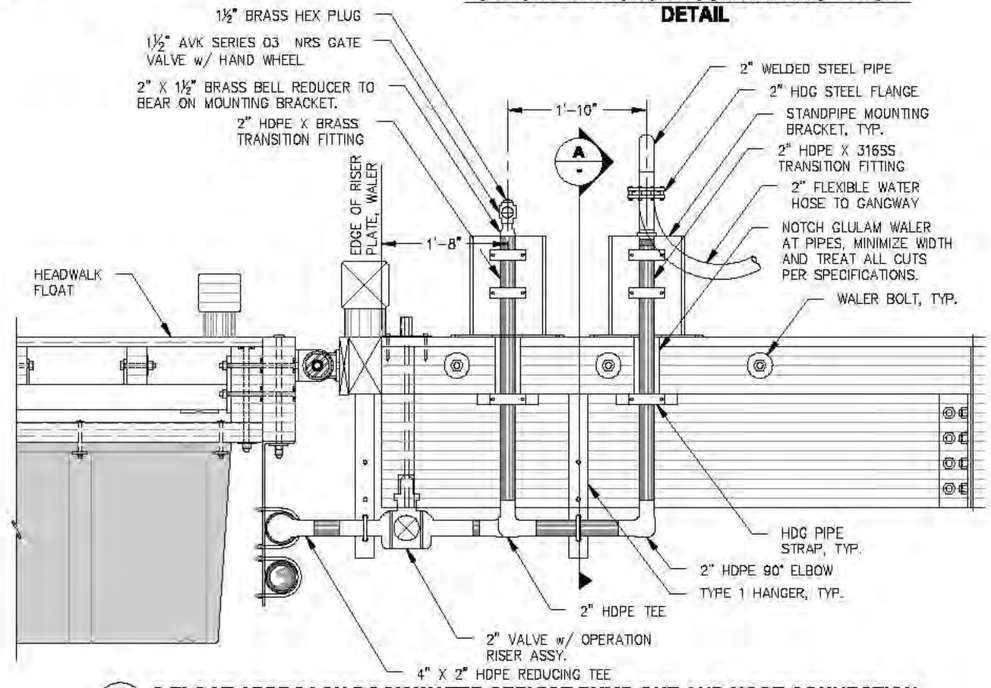

E 8.02 **C FLOAT APPROACH DOCK WATER SERVICE PUMP OUT AND HOSE CONNECTION DETAIL**

REVISIONS

REV.	DATE	DESCRIPTION	DWN.	CKD.	APP.

PND ENGINEERS, INC.
9360 Glacier Highway, Ste. 100
Juneau, Alaska 99801
Phone: 907-586-2093
Fax: 907-586-2099
www.pndengineers.com

DESIGN: TCB CHECKED: JLD
DRAWN: WRB APPROVED: CRS
SCALE: NTS
DATE: 2/28/14

STATE OF ALASKA — John L. DeMuth CE-8847 — REGISTERED PROFESSIONAL ENGINEER

CITY & BOROUGH OF JUNEAU, ALASKA
AURORA HARBOR REBUILD - PHASE I
CONTRACT NO. DH 12-160

SHEET TITLE: **C FLOAT APPROACH DOCK WATER SERVICE DETAILS**

PND PROJECT NO.: 122055

8.08

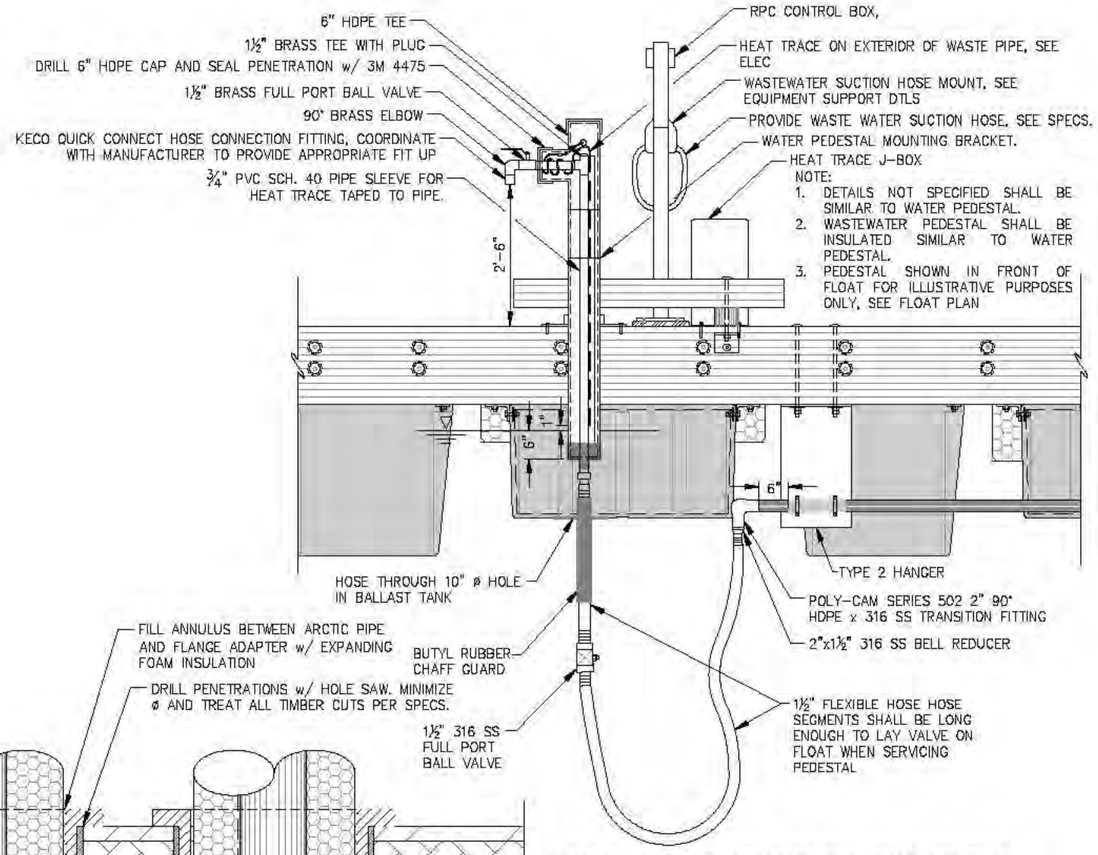

WASTEWATER REMOTE PUMPING CENTER ELEVATION

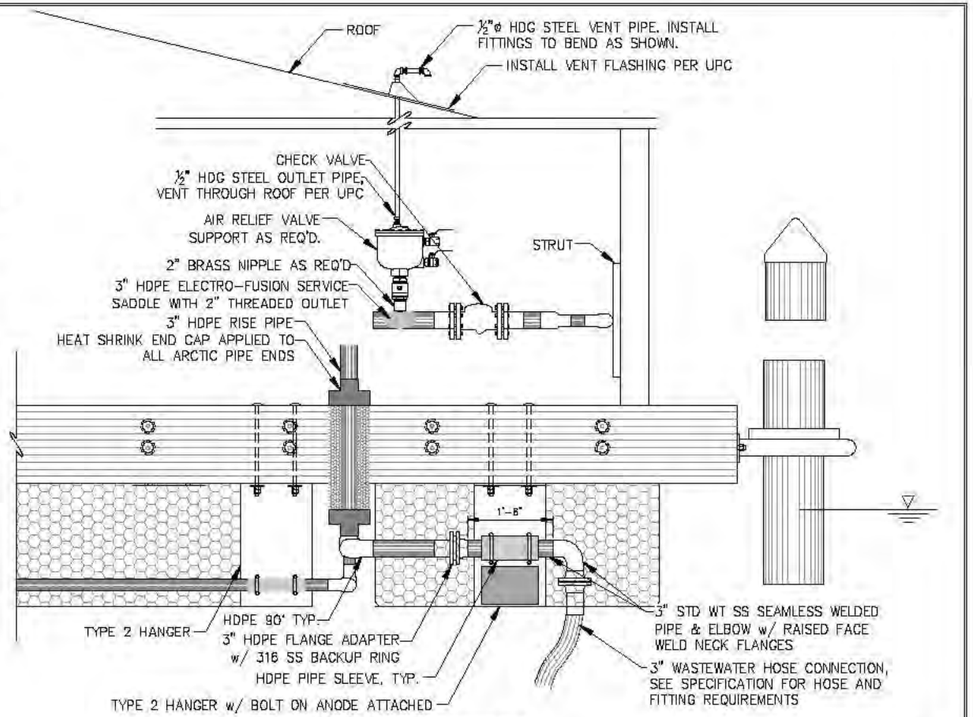

A - UTILITY BUILDING PLUMBING ELEVATION

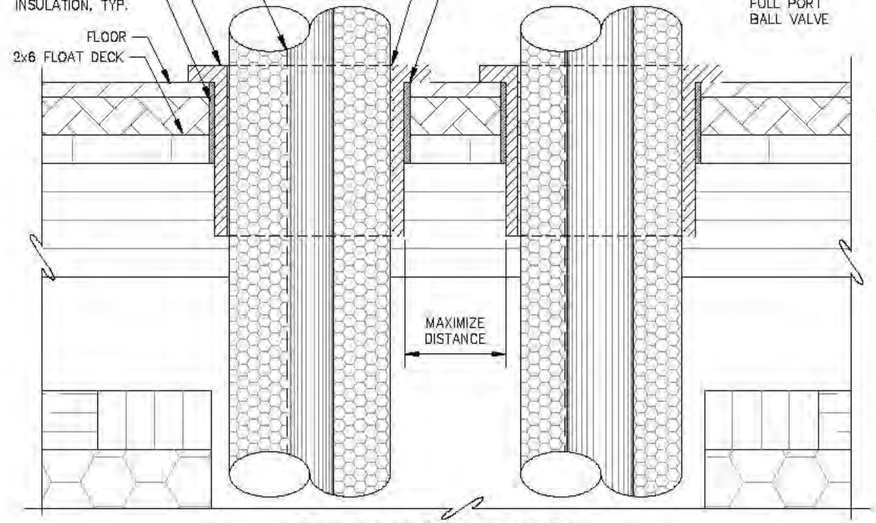

B - FLOOR PENETRATION SECTION

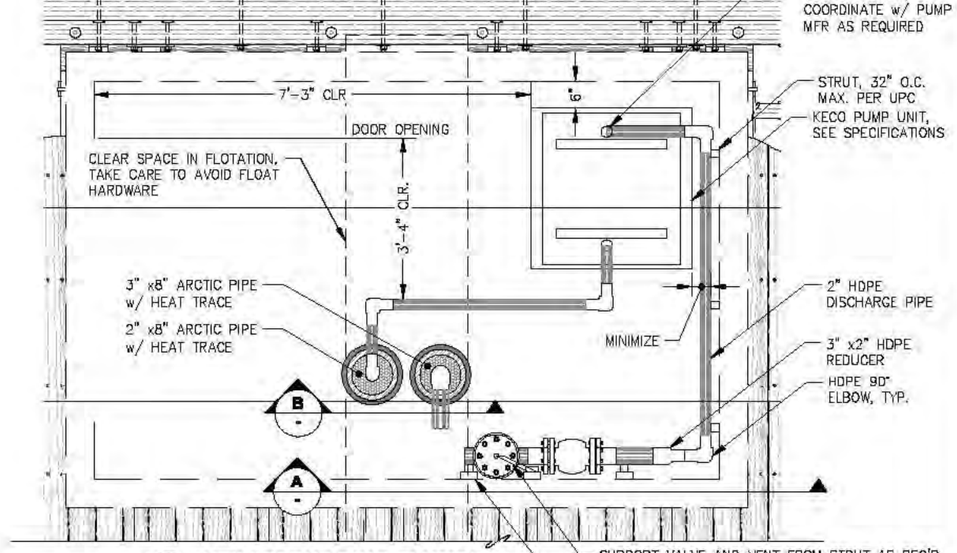

F 8.02 - UTILITY BUILDING PLUMBING PLAN

REVISIONS

REV.	DATE	DESCRIPTION	DWN.	CKD.	APP.

PND ENGINEERS, INC.
9360 Glacier Highway, Ste. 100
Juneau, Alaska 99801
Phone: 907-586-2093
Fax: 907-586-2099
www.pndengineers.com

DESIGN: TCB CHECKED: JLD
DRAWN: TCB APPROVED: CRS
SCALE: NTS
DATE: 2/28/14

STATE OF ALASKA — John L. Dellath CE-8847 — REGISTERED PROFESSIONAL CIVIL ENGINEER

CITY & BOROUGH OF JUNEAU, ALASKA
AURORA HARBOR REBUILD - PHASE I
CONTRACT NO. DH 12-160

SHEET TITLE: **WASTEWATER SYSTEM DETAILS**

8.09

PND PROJECT NO.: 122055

SHEET 137 OF 143

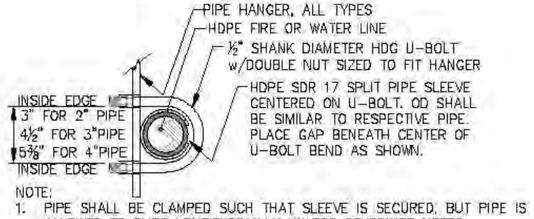

NOTE:
1. PIPE SHALL BE CLAMPED SUCH THAT SLEEVE IS SECURED, BUT PIPE IS ALLOWED TO SLIDE LONGITUDINALLY UNLESS OTHERWISE NOTED.
2. PIPE SLEEVE SHALL BE 6" LONG FOR TYPE 1 HANGERS AND 12" LONG FOR TYPE 2 HANGERS.
3. HANGER SHOWN OR CALLED OUT AS ADJACENT TO FITTINGS SHALL PROVIDE 6" CLEARANCE BETWEEN SLEEVE AND PIPE WELD.

PIPE MOUNTING DETAIL

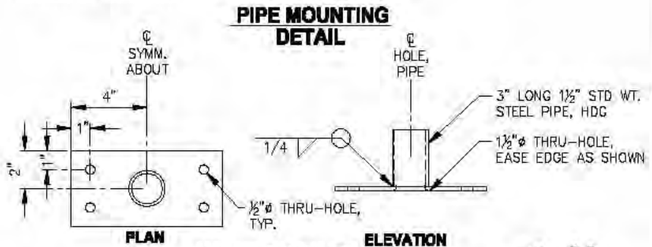

VALVE RISER BRACKET DETAIL

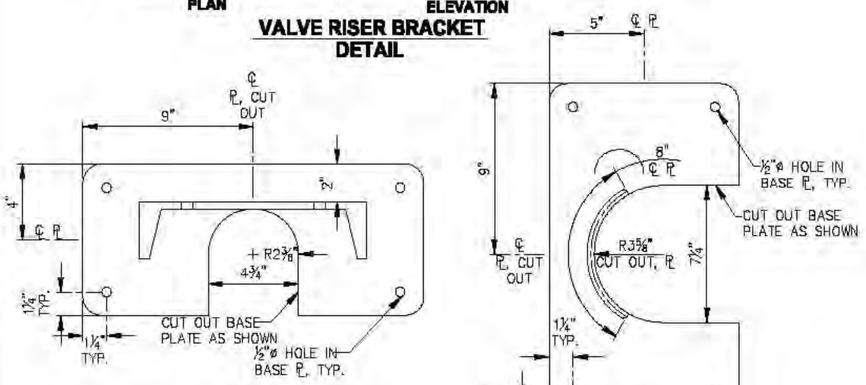

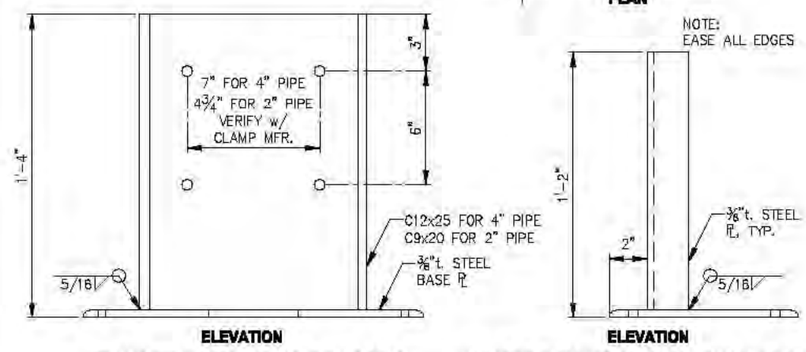

STANDPIPE MOUNTING BRACKET DETAIL

WATER PEDESTAL MOUNTING BRACKET DETAIL

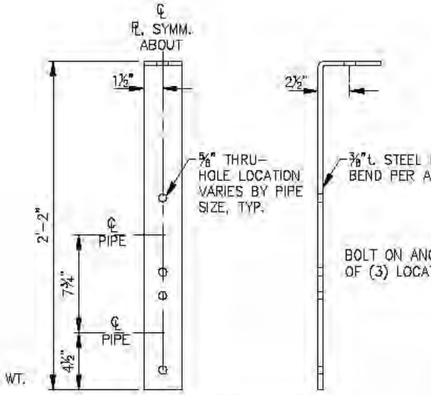

TYPE 1 PIPE HANGER DETAIL

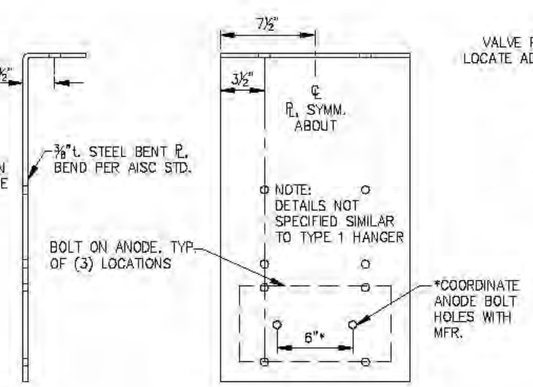

TYPE 2 PIPE HANGER DETAIL

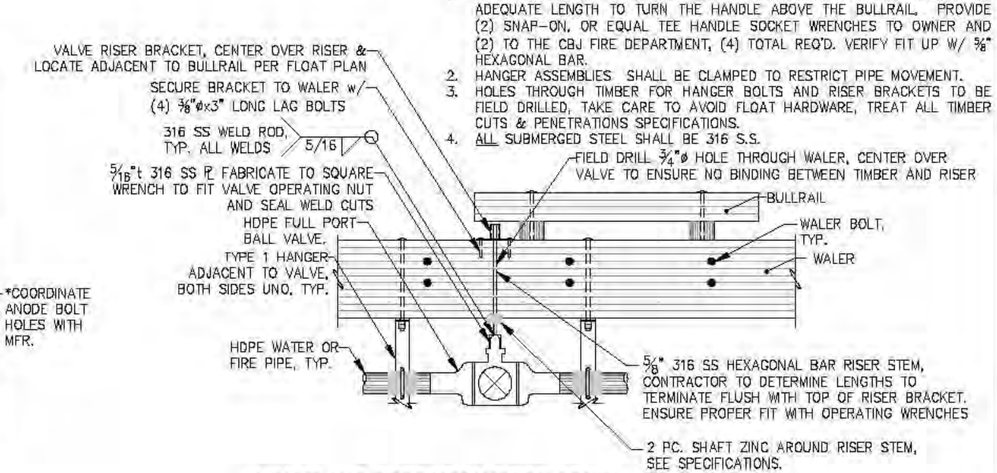

NOTE:
1. VALVES SHALL BE OPERATED WITH A TEE-HANDLE SOCKET WRENCH OF ADEQUATE LENGTH TO TURN THE HANDLE ABOVE THE BULLRAIL. PROVIDE (2) SNAP-ON, OR EQUAL TEE HANDLE SOCKET WRENCHES TO OWNER AND (2) TO THE CBJ FIRE DEPARTMENT, (4) TOTAL REQ'D. VERIFY FIT UP W/ ⅝" HEXAGONAL BAR.
2. HANGER ASSEMBLIES SHALL BE CLAMPED TO RESTRICT PIPE MOVEMENT.
3. HOLES THROUGH TIMBER FOR HANGER BOLTS AND RISER BRACKETS TO BE FIELD DRILLED, TAKE CARE TO AVOID FLOAT HARDWARE, TREAT ALL TIMBER CUTS & PENETRATIONS SPECIFICATIONS.
4. ALL SUBMERGED STEEL SHALL BE 316 S.S.

VALVE AND OPERATION RISER ASSY. DETAIL

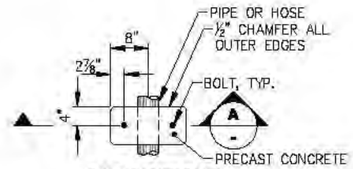

SASH WEIGHT PLAN

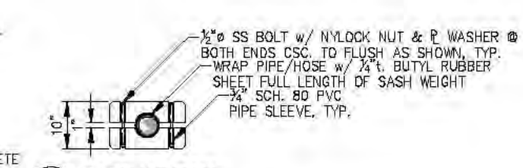

SASH WEIGHT SECTION

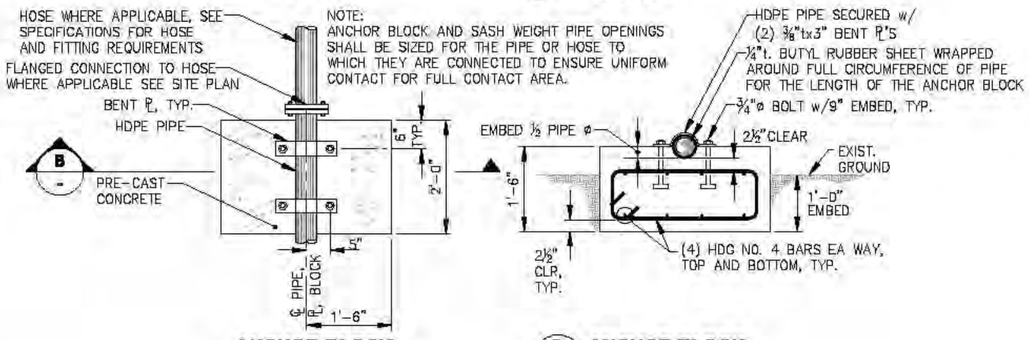

ANCHOR BLOCK PLAN

ANCHOR BLOCK SECTION

REVISIONS

REV.	DATE	DESCRIPTION	DWN.	CKD.	APP.

PND ENGINEERS, INC.
9360 Glacier Highway, Ste. 100
Juneau, Alaska 99801
Phone: 907-586-2093
Fax: 907-586-2099
www.pndengineers.com

DESIGN: TCB CHECKED: JLD
DRAWN: TCB APPROVED: CRS
SCALE: NTS
DATE: 2/28/14

STATE OF ALASKA — 49TH — John L. Dekuth CC-8847 — REGISTERED PROFESSIONAL ENGINEER

CITY & BOROUGH OF JUNEAU, ALASKA
AURORA HARBOR REBUILD - PHASE I
CONTRACT NO. DH 12-160

SHEET TITLE: UTILITY DETAILS

8.10

PND PROJECT NO.: 122055

SHEET 138 OF 143

NOTES:

1. EDGE NAIL ALL ROOF & WALL SHEATHING @ 6" O.C., IN FIELD NAIL @ 12"O.C. w/10d HOT-DIP GALVANIZED COMMON NAILS. BLOCKING REQUIRED @ ALL PANEL EDGES.
2. ALL FRAMING NAILS TO BE 16d HOT-DIP GALVANIZED COMMON NAILS.
3. INTERIOR WALLS AND CEILING SHALL BE PAINTED w/100% ACRYLIC PAINT. SEE SPECS FOR PAINT DETAILS AND COLOR.
4. ALL FLASHING SHALL BE SIMILAR MATERIAL AND GAGE AS METAL ROOFING.

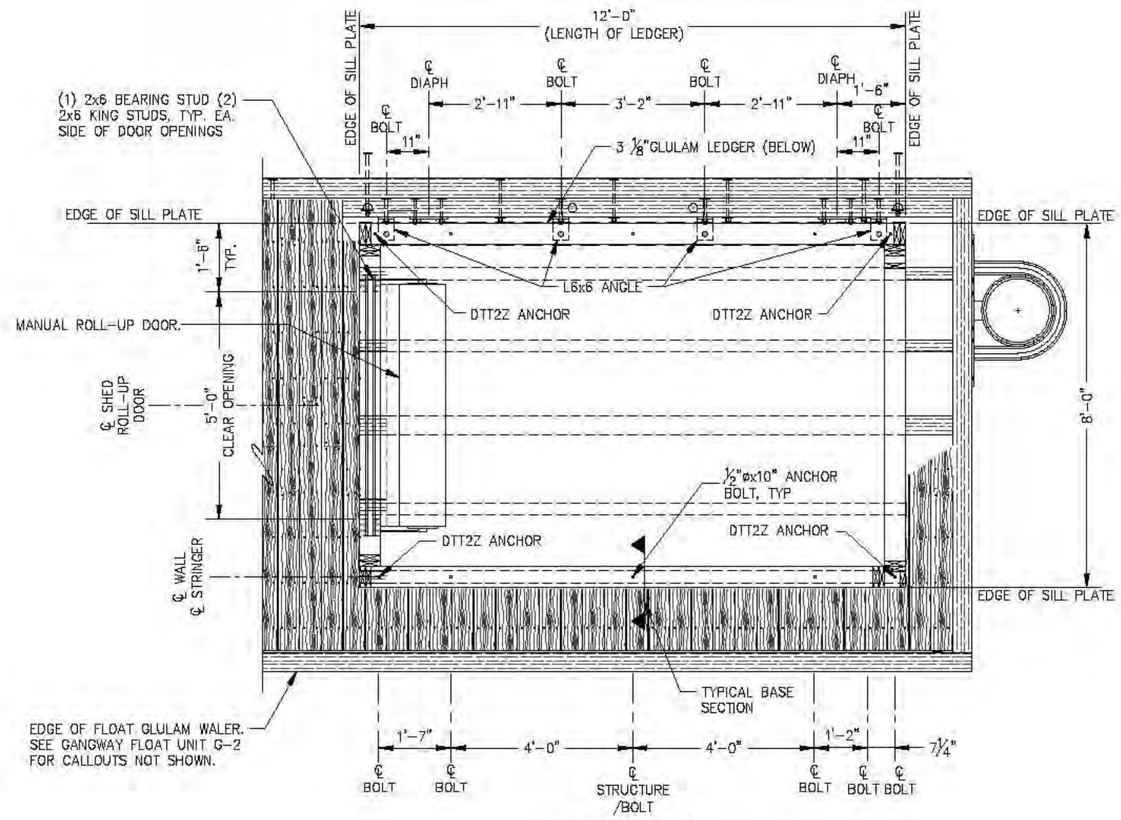

FLOOR PLAN

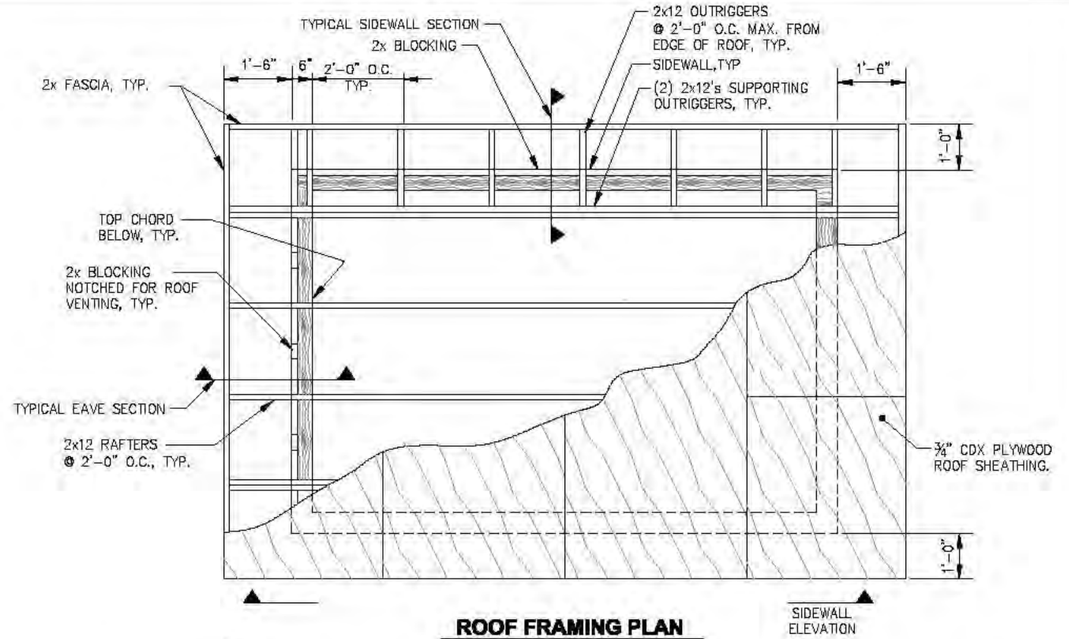

ROOF FRAMING PLAN

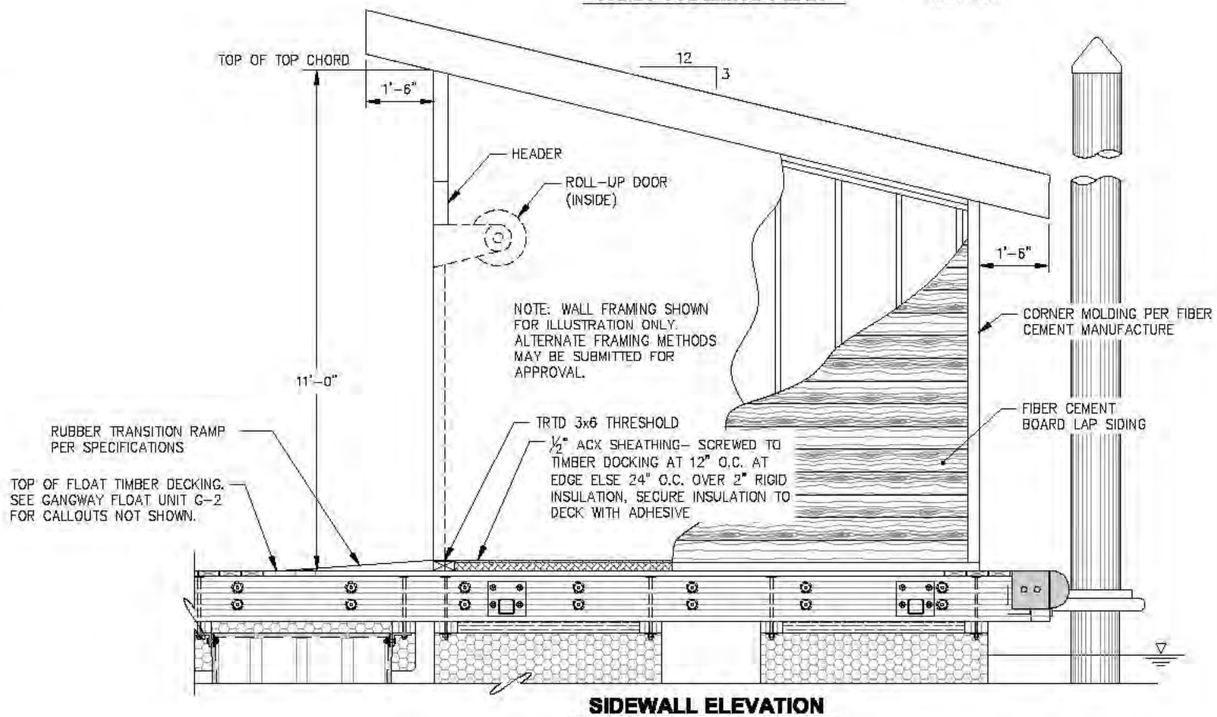

SIDEWALL ELEVATION

REVISIONS

REV.	DATE	DESCRIPTION	DWN.	CKD.	APP.

P N D ENGINEERS, INC.
9360 Glacier Highway, Ste. 100
Juneau, Alaska 99801
Phone: 907-586-2093
Fax: 907-586-2099
www.pndengineers.com

DESIGN: MDS CHECKED: JLD
DRAWN: WRB APPROVED: CRS
SCALE: NTS
DATE: 2/28/14

CITY & BOROUGH OF JUNEAU, ALASKA
AURORA HARBOR REBUILD - PHASE I
CONTRACT NO. DH 12-160

SHEET TITLE: UTILITY BUILDING PLAN AND ELEVATION

PND PROJECT NO.: 122055

9.01

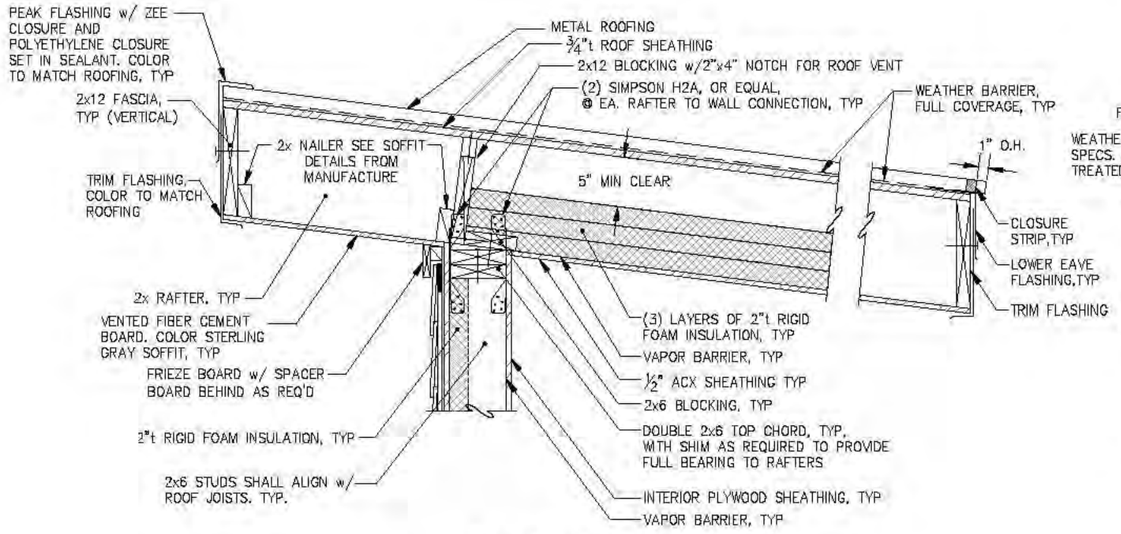

TYPICAL EAVE SECTION

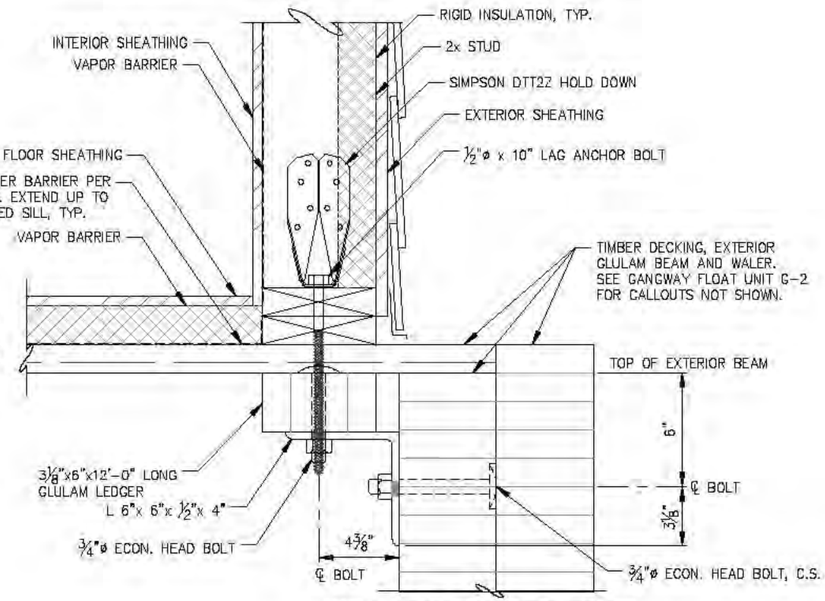

HOLD DOWN ANGLE SECTION

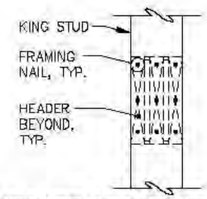

HEADER ATTACHMENT DETAIL

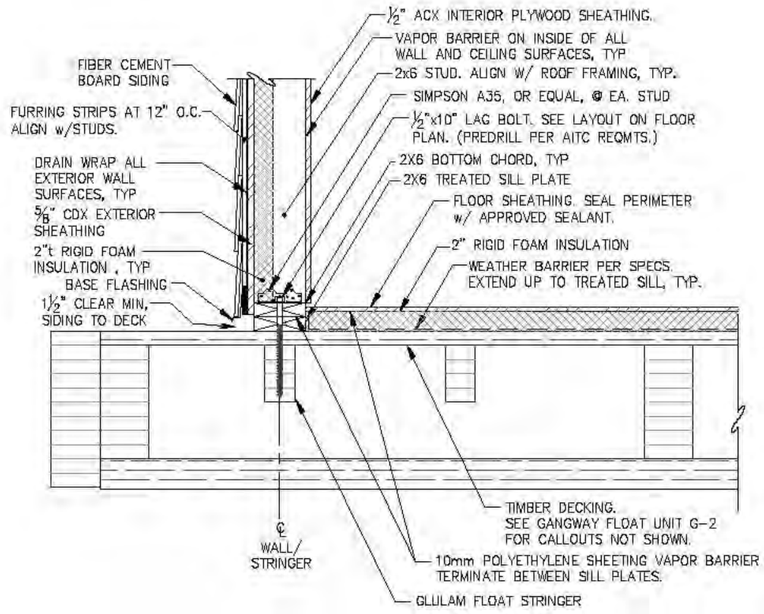

TYPICAL BASE SECTION

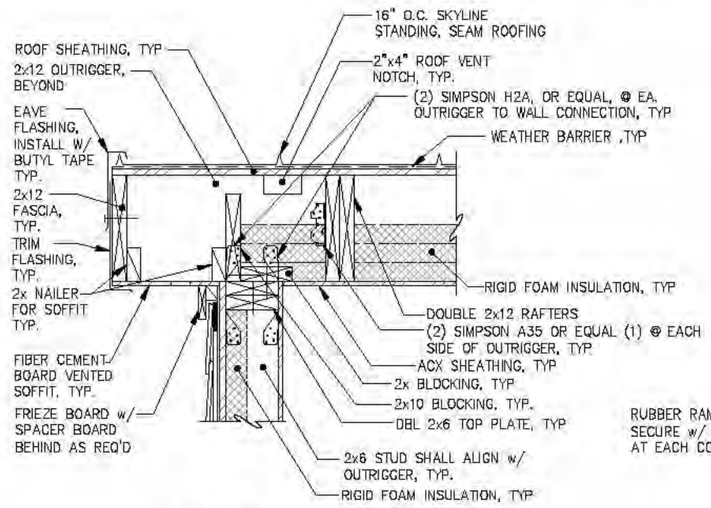

TYPICAL SIDEWALL SECTION

NOTE: SEE TYPICAL EAVE SECTION FOR DETAILS NOT CALLED OUT

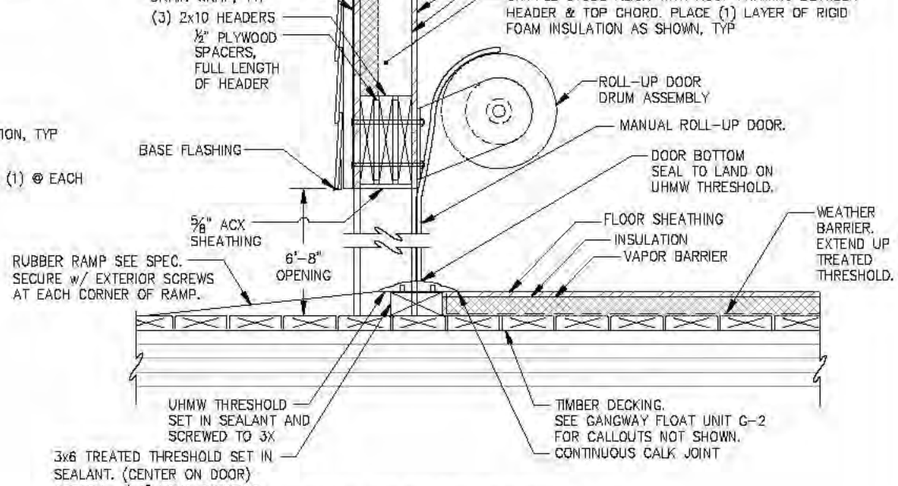

ROLL-UP DOOR HEADER SECTION

REVISIONS

REV.	DATE	DESCRIPTION	DWN.	CKD.	APP.

P N D ENGINEERS, INC.
9360 Glacier Highway, Ste. 100
Juneau, Alaska 99801
Phone: 907-586-2093
Fax: 907-586-2099
www.pndengineers.com

DESIGN: MDS CHECKED: JLD
DRAWN: WRB APPROVED: CRS
SCALE: NTS
DATE: 2/28/14

STATE OF ALASKA — John L. Dalrymple — CE-8847 — REGISTERED PROFESSIONAL ENGINEER

CITY & BOROUGH OF JUNEAU, ALASKA
AURORA HARBOR REBUILD - PHASE I
CONTRACT NO. DH 12-160

SHEET TITLE: **UTILITY BUILDING DETAILS**

PND PROJECT NO.: 122055

9.02
SHEET 140 OF 143

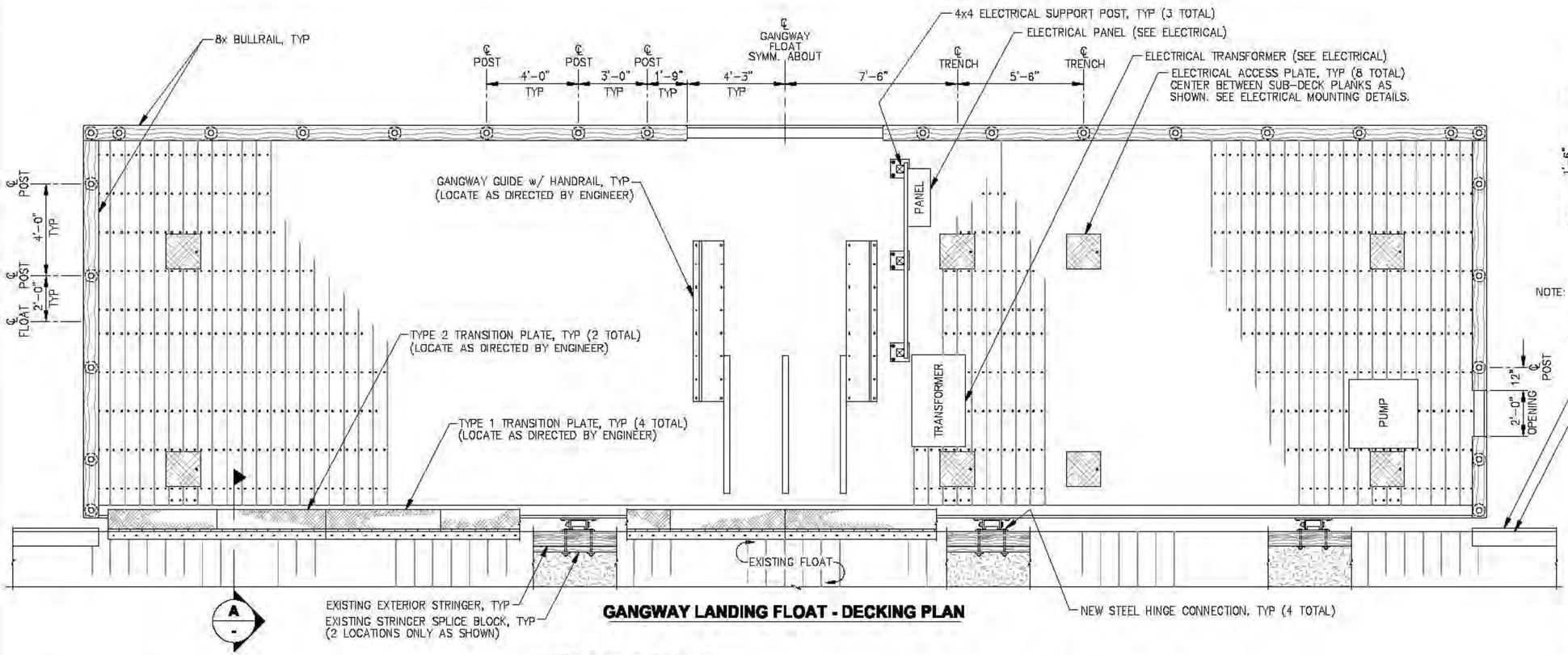

GANGWAY LANDING FLOAT - DECKING PLAN

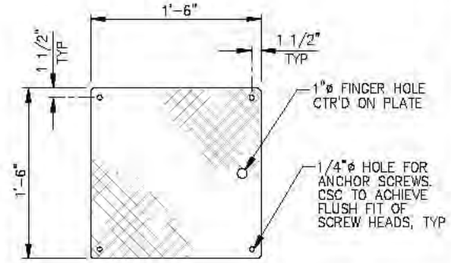

ELECTRICAL ACCESS PLATE

NOTE: PLATE SHALL BE 1/4" ALUMINUM DIAMOND PLATE w/ FLAME-SPRAYED TEXTURE PER SPECIFICATIONS. SEE ELECTRICAL MOUNTING DETAILS FOR ATTACHMENT REQUIREMENTS. LOCATE PER FLOAT PLAN. CLIP CRNRS. 1/4" AS SHOWN.

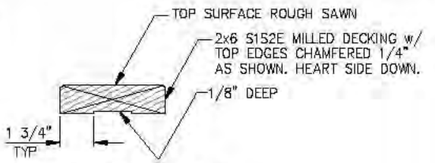

TYPICAL DECK PLANK

NOTE: SEE SPECIFICATIONS FOR DECKING REQMT'S

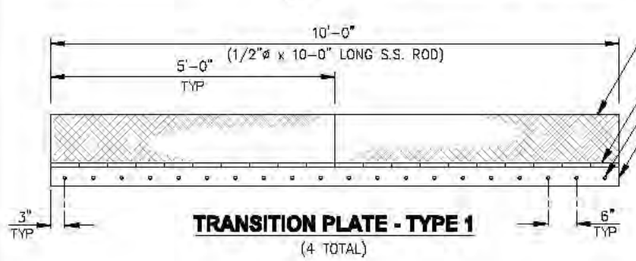

TRANSITION PLATE - TYPE 1

(4 TOTAL)

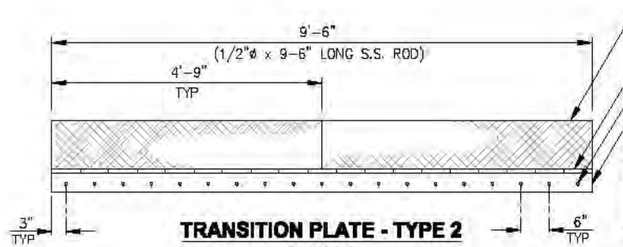

TRANSITION PLATE - TYPE 2

(2 TOTAL)

NOTE: PROVIDE END CAP (WELD) ON LAST HINGE PIPE SEGMENT (EXTERIOR, ONE END ONLY) TO PROVIDE CONTAINMENT FOR S.S. ROD ON TYPE 2 TRANSITION PLATES ONLY.

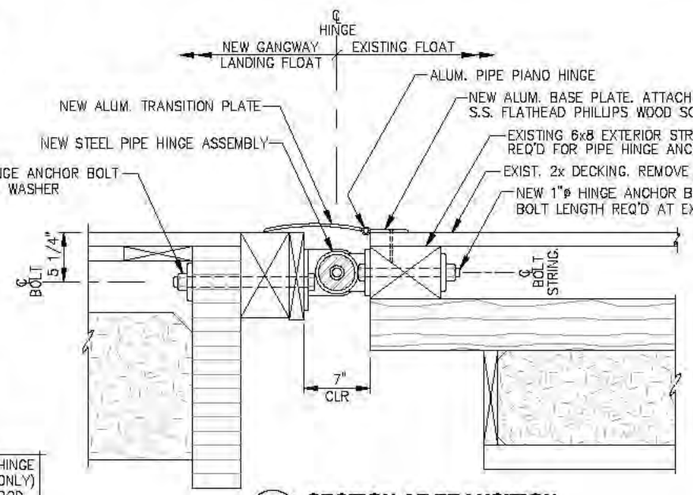

SECTION AT TRANSITION

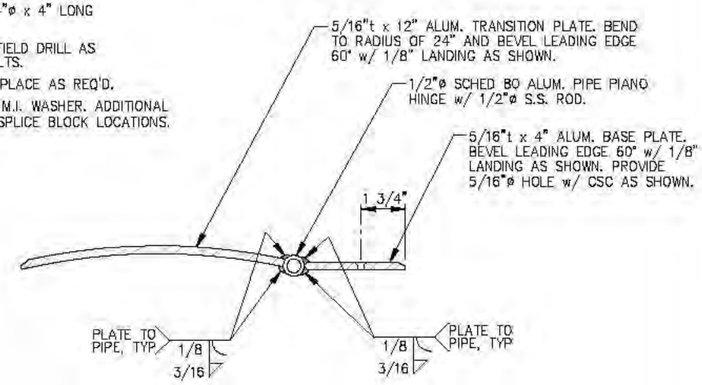

TRANSITION PLATE - TYPICAL SECTION

NOTE: ALL PLATE SHALL BE ALUMINUM DIAMOND PLATE w/ FLAME-SPRAYED TEXTURE PER SPECIFICATIONS.

CITY & BOROUGH OF JUNEAU - DOCKS & HARBORS

REVISIONS

REV.	DATE	DESCRIPTION	DWN.	CKD.	APP.

PND ENGINEERS, INC.
9360 Glacier Highway, Ste. 100
Juneau, Alaska 99801
Phone: 907-586-2093
Fax: 907-586-2099
www.pndengineers.com

STATE OF ALASKA — John L. Dellath — CE-8547 — REGISTERED PROFESSIONAL ENGINEER

DESIGN: JLD CHECKED: JLD
DRAWN: JLD APPROVED: CRS
SCALE: AS SHOWN
DATE: 2/28/14

CITY & BOROUGH OF JUNEAU, ALASKA
AURORA HARBOR REBUILD - PHASE I
CONTRACT NO. DH 12-160

SHEET TITLE: **C - GANGWAY LANDING FLOAT DETAILS**

PND PROJECT NO.: 122055

SHEET 10.01
SHEET 141 OF 143

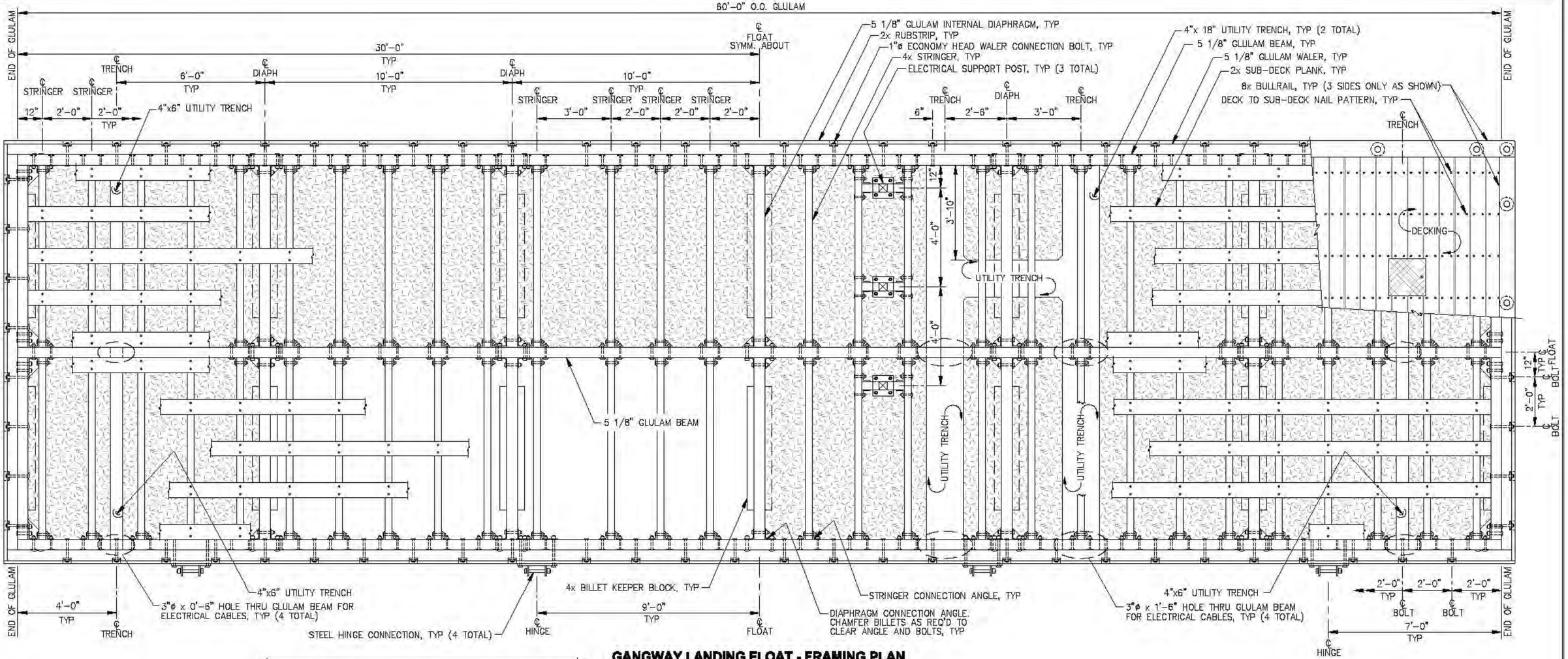

GANGWAY LANDING FLOAT - FRAMING PLAN

NOTE: NOT ALL FLOATATION BILLETS SHOWN FOR CLARITY.

NOTE: DETAILS NOT SHOWN SIMILAR TO N-GANGWAY LANDING FLOAT.

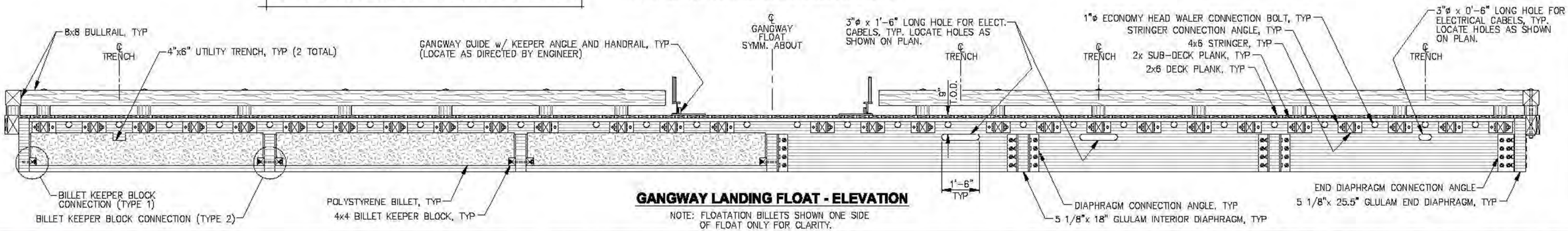

GANGWAY LANDING FLOAT - ELEVATION

NOTE: FLOATATION BILLETS SHOWN ONE SIDE OF FLOAT ONLY FOR CLARITY.

REVISIONS

REV.	DATE	DESCRIPTION	DWN.	CKD.	APP.

P N D ENGINEERS, INC.
9360 Glacier Highway, Ste. 100
Juneau, Alaska 99801
Phone: 907-586-2093
Fax: 907-586-2099
www.pndengineers.com

DESIGN: JLD CHECKED: JLD
DRAWN: JLD APPROVED: CRS
SCALE: AS SHOWN

STATE OF ALASKA — John L. DeMuth — CE-8847 — REGISTERED PROFESSIONAL ENGINEER
DATE: 2/28/14

CITY & BOROUGH OF JUNEAU, ALASKA
AURORA HARBOR REBUILD - PHASE I
CONTRACT NO. DH 12-160

SHEET TITLE:
C - GANGWAY LANDING FLOAT DETAILS

PND PROJECT NO.: 122055

10.02
SHEET 142 OF 143

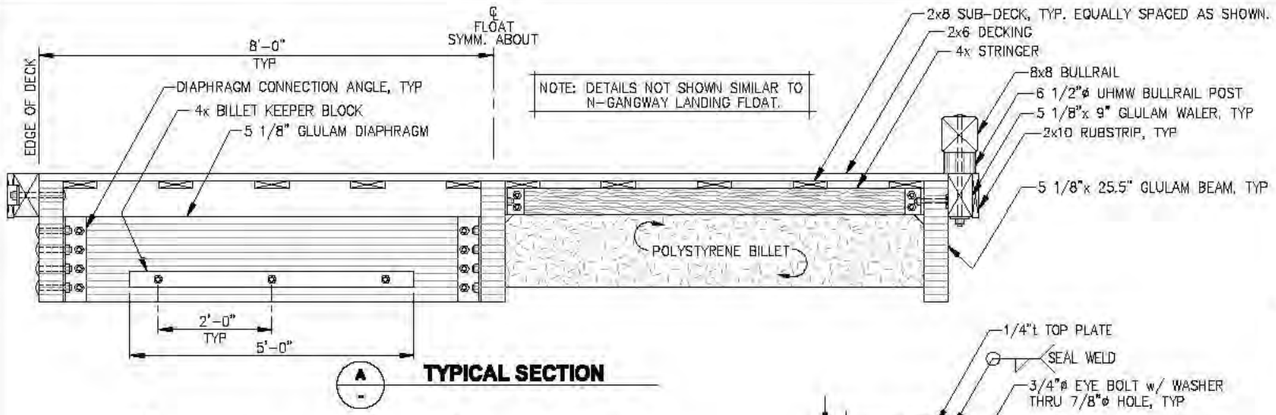

TYPICAL SECTION

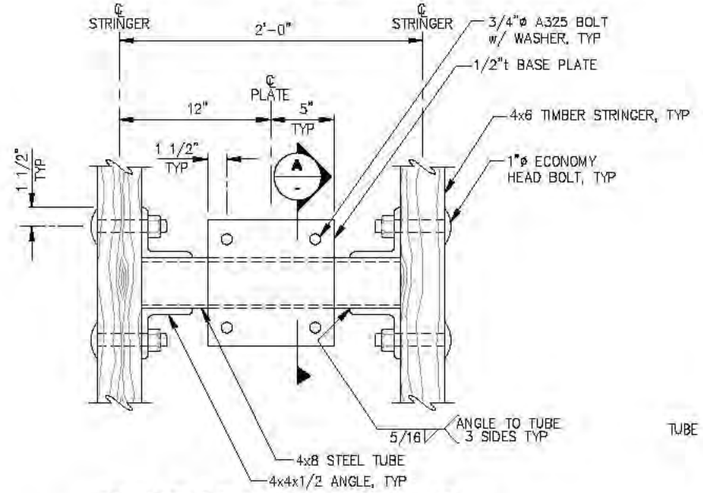

SUPPORT POST BASE PLATE - PLAN

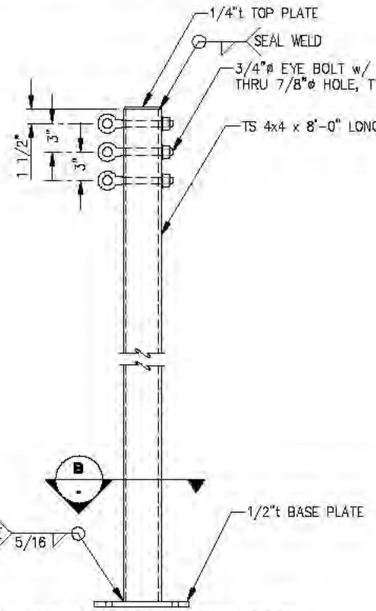

ELECTRICAL SUPPORT POST

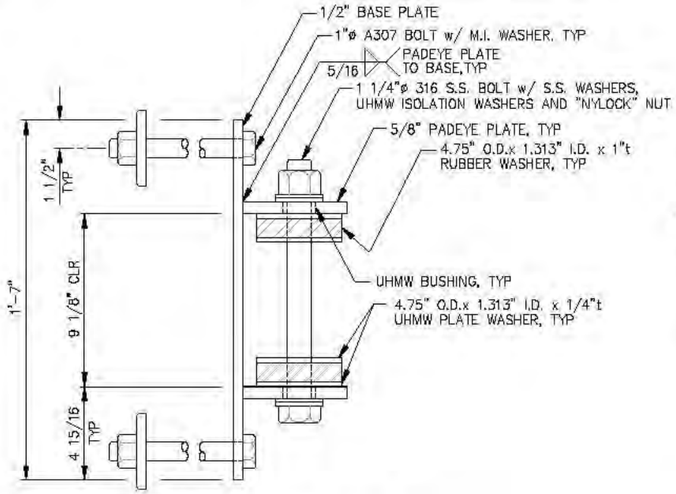

HINGE CONNECTION - PLAN

(GANGWAY LANDING FLOAT)

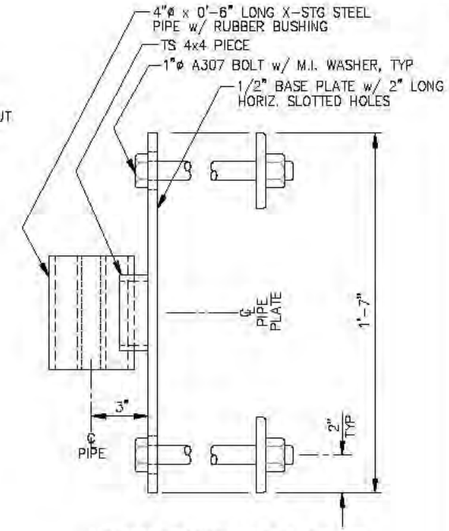

HINGE CONNECTION - PLAN

(EXISTING TIMBER MAINWALK FLOAT)

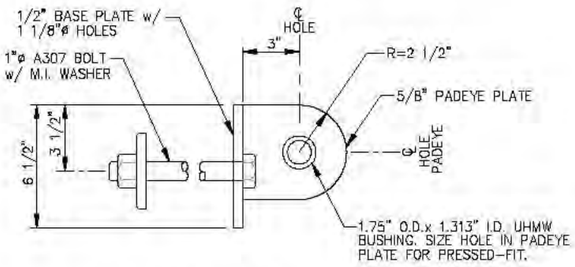

HINGE CONNECTION - ELEVATION

(GANGWAY LANDING FLOAT)

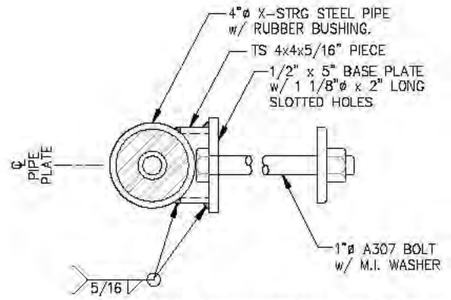

HINGE CONNECTION - ELEVATION

(EXISTING TIMBER MAINWALK FLOAT)

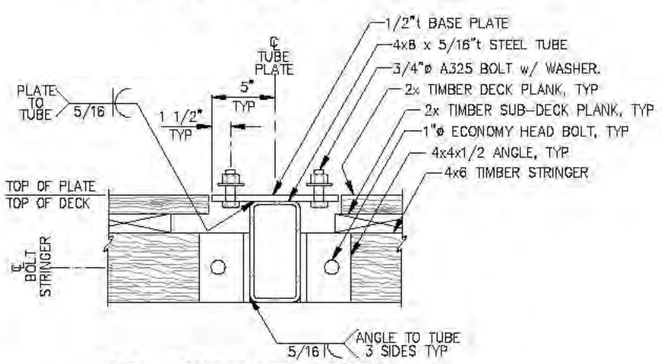

A - **BASE PLATE - SECTION**

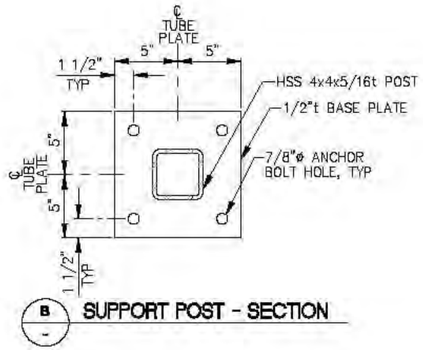

B - **SUPPORT POST - SECTION**

REVISIONS

REV.	DATE	DESCRIPTION	DWN.	CKD.	APP.

P N D ENGINEERS, INC.
9360 Glacier Highway, Ste. 100
Juneau, Alaska 99801
Phone: 907-586-2093
Fax: 907-586-2099
www.pndengineers.com

DESIGN: JLD CHECKED: JLD
DRAWN: JLD APPROVED: CRS
SCALE: AS SHOWN
DATE: 2/28/14

STATE OF ALASKA — John L. DeMuth — CC-8847 — REGISTERED PROFESSIONAL ENGINEER

CITY & BOROUGH OF JUNEAU, ALASKA
AURORA HARBOR REBUILD - PHASE I
CONTRACT NO. DH 12-160

SHEET TITLE:
C - GANGWAY LANDING FLOAT DETAILS

PND PROJECT NO.: 122055

10.03
SHEET 143 OF 143

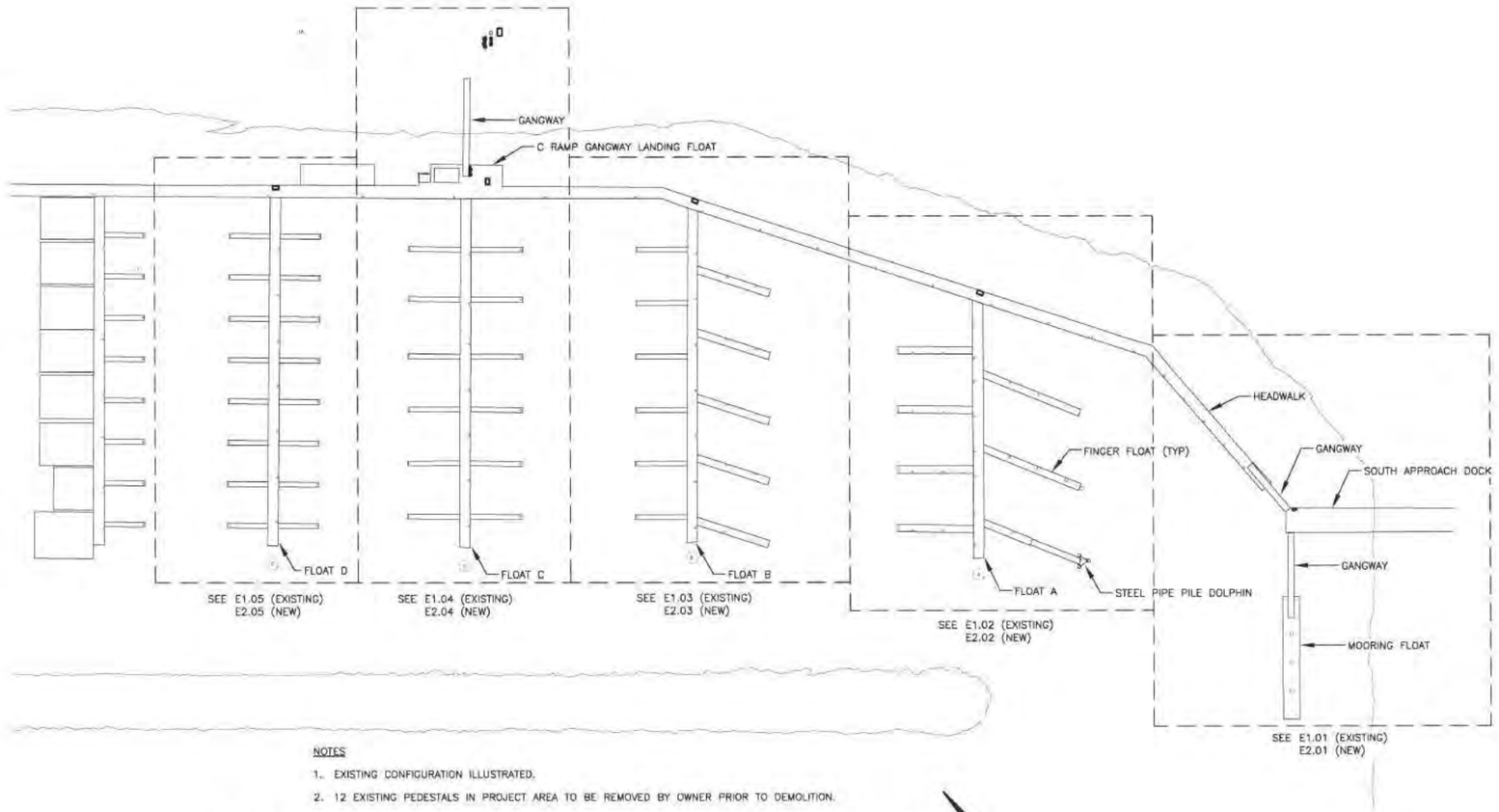

NOTES

1. EXISTING CONFIGURATION ILLUSTRATED.
2. 12 EXISTING PEDESTALS IN PROJECT AREA TO BE REMOVED BY OWNER PRIOR TO DEMOLITION.

1 SITE PLAN - AURORA HARBOR

SCALE IN FEET
0 60 120 FT.

LEGEND

ABBREVIATIONS:

GFI	GROUND FAULT INTERRUPTED
UON	UNLESS OTHERWISE NOTED
WP	WEATHERPROOF
XFMR	TRANSFORMER
HDG	HOT-DIPPED GALVANIZED
GRS	GALVANIZED RIGID SOLID
AFF	ABOVE FIXED FLOOR
GFR	GROUND FAULT RELAY
(E)	EXISTING TO REMAIN
(N)	NEW
(R)	EXISTING TO BE RELOCATED
(X)	EXISTING TO BE REMOVED

SWITCHING:

S	SINGLE POLE SWITCH, 48" AFF
PEC	PHOTOELECTRIC CELL

LIGHTING:

	EXTERIOR SOFFIT MOUNTED LUMINAIRE
	EXTERIOR WALL MOUNTED LUMINAIRE
	EXTERIOR POLE MOUNTED LUMINAIRE

POWER:

	DUPLEX RECEPTACLE
	SPECIAL RECEPTACLE
	EQUIPMENT CONNECTION
J	JUNCTION BOX
C	CONDULET
	PANELBOARD
	MOTOR CONNECTION
	MOTOR STARTER
	COMBINATION STARTER/DISCONNECT
	DISCONNECT
	GROUND ROD
T	THERMOSTAT, 48" AFF
	CIRCUIT BREAKER
	SWITCH OR DISCONNECT
	CONTACT
	FUSE
	DUPLEX SHORE-TIE PEDESTAL, X = TYPE PER SCHEDULE
	SHORE-TIE PEDESTAL WITH LIGHTING
	SINGLE SIDE SHORE-TIE PEDESTAL
	LIGHTING ONLY PEDESTAL
	AERIAL CABLE
	FLEXIBLE CONDUIT

LOW VOLTAGE:

C	TELECOM PEDESTAL

Mar 13, 2014 - 8:10am
F:\Projects\137 PH&D\35 Aurora Harbor Rebuild Phase I\Drawings\Working\E1.00.dwg (E1.00 tab)

CITY & BOROUGH OF JUNEAU DOCKS & HARBORS

HAIGHT & ASSOCIATES
526 Main Street, Juneau, AK 99801
(907) 586-9788

REVISIONS

REV.	DATE	DESCRIPTION	DWN.	CKD.	APP.

PND ENGINEERS, INC.
9360 Glacier Highway, Ste. 100
Juneau, Alaska 99801
Phone: 907-586-2093
Fax: 907-586-2099
www.pndengineers.com

DESIGN: KHD/BCH CHECKED: BCH
DRAWN: KHD APPROVED: BCH
SCALE: AS SHOWN

STATE OF ALASKA B.C. HAIGHT EE 4800 REGISTERED PROFESSIONAL ENGINEER
DATE: Mar 13, 2014

CITY & BOROUGH OF JUNEAU, ALASKA
AURORA HARBOR REBUILD - PHASE I
CONTRACT NO. DH 12-160

SHEET TITLE: **OVERALL SITE PLAN**

PND PROJECT NO.: 122055 DWG. FILE:

E1.00
SHEET 1 OF 28

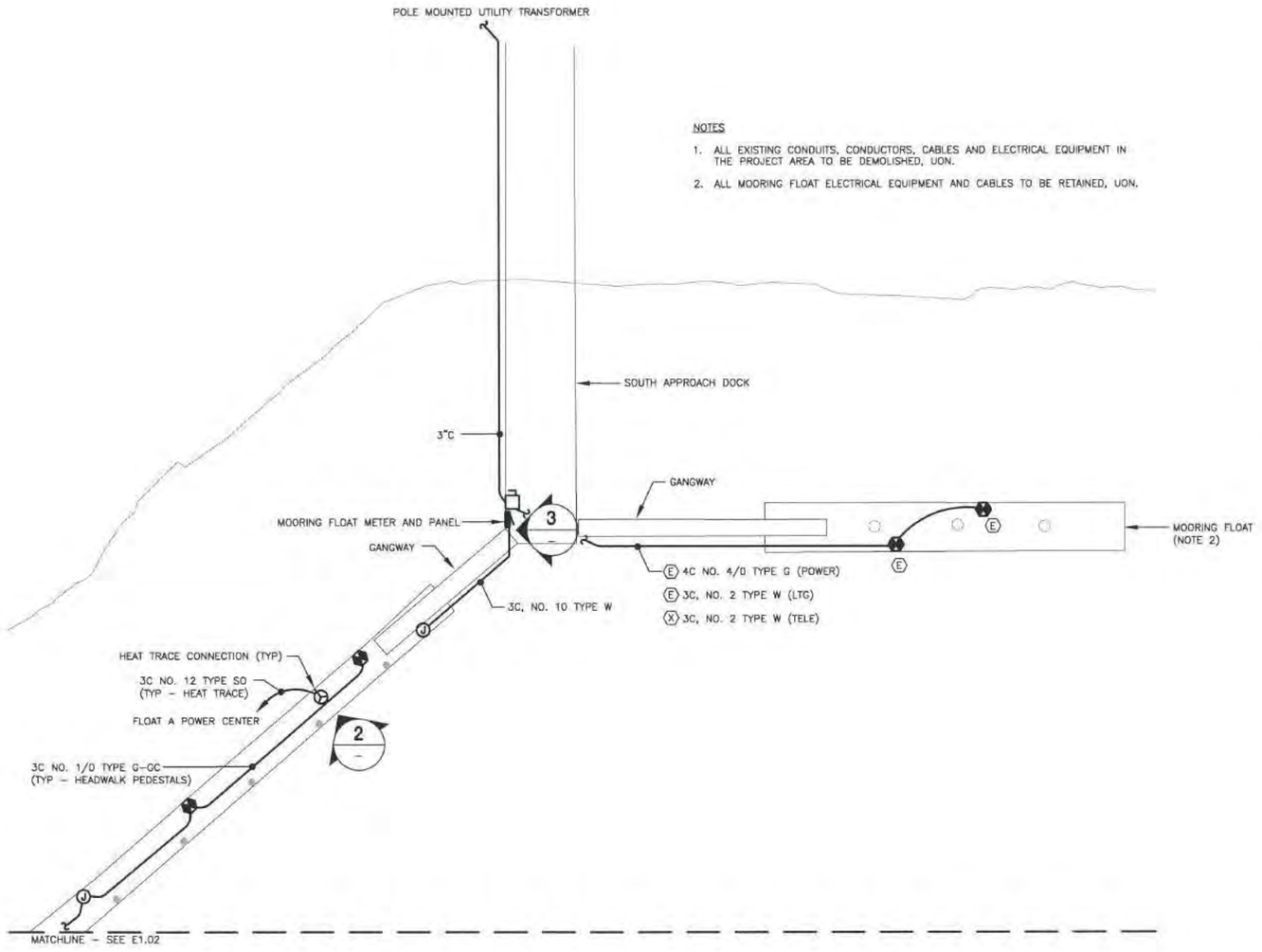

1 SITE PLAN - SOUTH APPROACH DOCK

SCALE IN FEET
0 20 40 FT.



2 PHOTO - HEAT TRACE CONNECTION
NO SCALE



3 PHOTO - MOORING FLOAT METER AND PANEL
NO SCALE

Mar 13, 2014 - 8:10am
F:\Projects\137 PND\35 Aurora Harbor Rebuild Phase I\Drawings\Working\E1.01.dwg (E1.00 tab)

CITY & BOROUGH OF JUNEAU DOCKS & HARBORS

HAIGHT & ASSOCIATES
526 Main Street, Juneau, AK 99801
(907) 586-9788

REVISIONS

REV.	DATE	DESCRIPTION	DWN.	CKD.	APP.

PND ENGINEERS, INC.
9360 Glacier Highway, Ste. 100
Juneau, Alaska 99801
Phone: 907-586-2093
Fax: 907-586-2099
www.pndengineers.com

DESIGN: KHD/BCH CHECKED: BCH
DRAWN: KHD APPROVED: BCH
SCALE: AS SHOWN
DATE: Mar 13, 2014

STATE OF ALASKA B.C. HAIGHT EE 4800 REGISTERED PROFESSIONAL ENGINEER

CITY & BOROUGH OF JUNEAU, ALASKA
AURORA HARBOR REBUILD - PHASE I
CONTRACT NO. DH 12-160

SHEET TITLE:
SITE PLAN - SOUTH APPROACH DOCK EXISTING

PND PROJECT NO.: 122055 DWG. FILE:

E1.01
SHEET 2 OF 28

NOTES

1. ALL EXISTING CONDUITS, CONDUCTORS, CABLES AND ELECTRICAL EQUIPMENT IN THE PROJECT AREA TO BE DEMOLISHED, UON.
2. POWER CENTER TO BE SALVAGED AND DELIVERED TO THE OWNER.

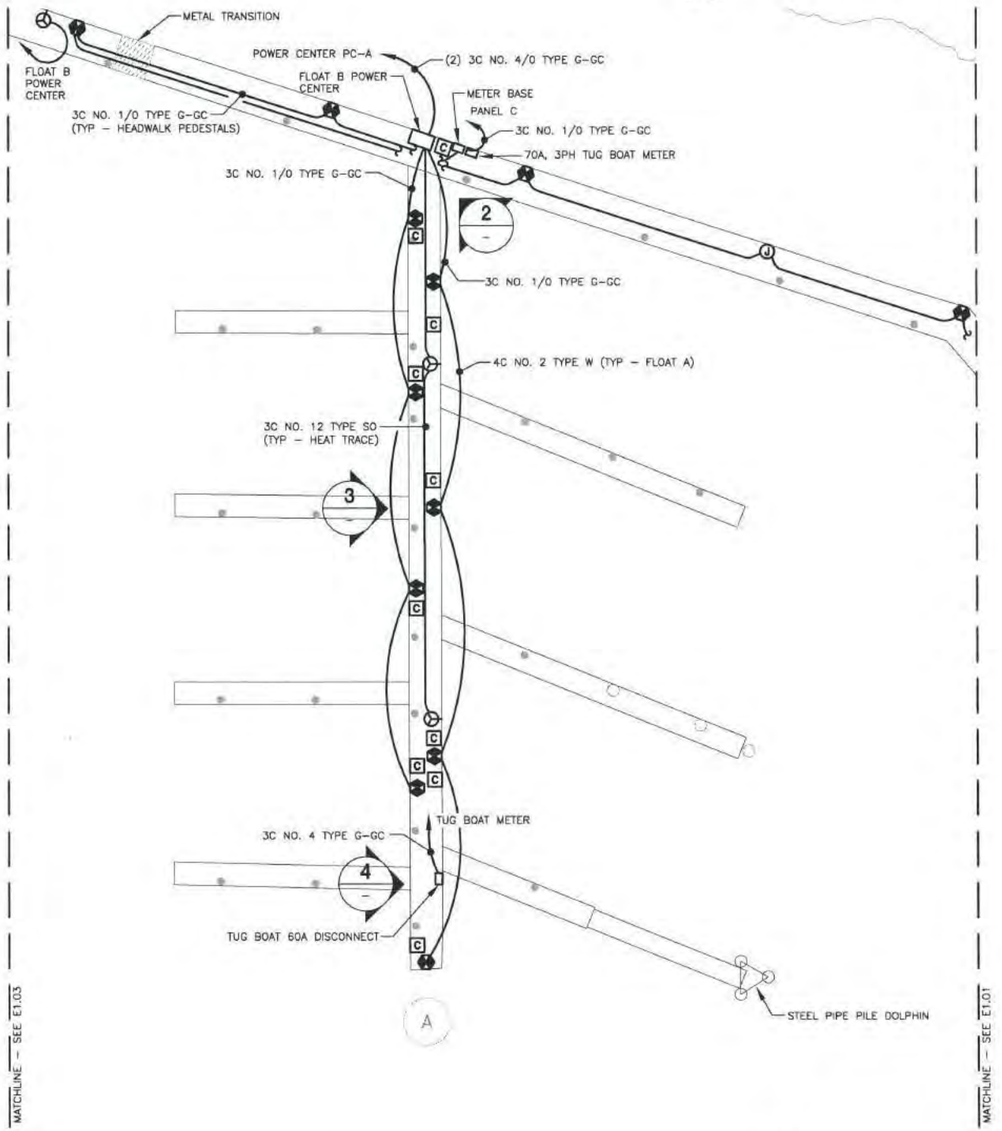

1 SITE PLAN - FLOAT A

SCALE IN FEET
0 20 40 FT.



2 PHOTO - FLOAT A POWER CENTER
NO SCALE



3 PHOTO - FLOAT A SHORE-TIE PEDESTAL
NO SCALE



4 PHOTO - 60A DISCONNECT
NO SCALE

Mar 13, 2014 - 8:10am
F:\Projects\137 PND\95 Aurora Harbor Rebuild Phase I\Drawings\Working\E1.02.dwg (E1.00 tab)

CITY & BOROUGH OF JUNEAU DOCKS & HARBORS

HAIGHT & ASSOCIATES
526 Main Street, Juneau, AK 99801
(907) 586-9788

REVISIONS

REV.	DATE	DESCRIPTION	DWN.	CKD.	APP.

P N D ENGINEERS, INC.
9360 Glacier Highway, Ste. 100
Juneau, Alaska 99801
Phone: 907-586-2093
Fax: 907-586-2099
www.pndengineers.com

DESIGN: KHD/BCH CHECKED: BCH
DRAWN: KHD APPROVED: BCH
SCALE: AS SHOWN

STATE OF ALASKA B.C. HAIGHT EE 4800 REGISTERED PROFESSIONAL ENGINEER
DATE: Mar 13, 2014

CITY & BOROUGH OF JUNEAU, ALASKA
AURORA HARBOR REBUILD - PHASE I
CONTRACT NO. DH 12-160

SHEET TITLE: SITE PLAN - FLOAT A EXISTING
PND PROJECT NO.: 122055 DWG. FILE:

E1.02
SHEET 3 OF 28

MATCHLINE – SEE E1.04

NOTES

1. ALL EXISTING CONDUITS, CONDUCTORS, CABLES AND ELECTRICAL EQUIPMENT IN THE PROJECT AREA TO BE DEMOLISHED, UON.
2. POWER CENTER TO BE SALVAGED AND DELIVERED TO THE OWNER.

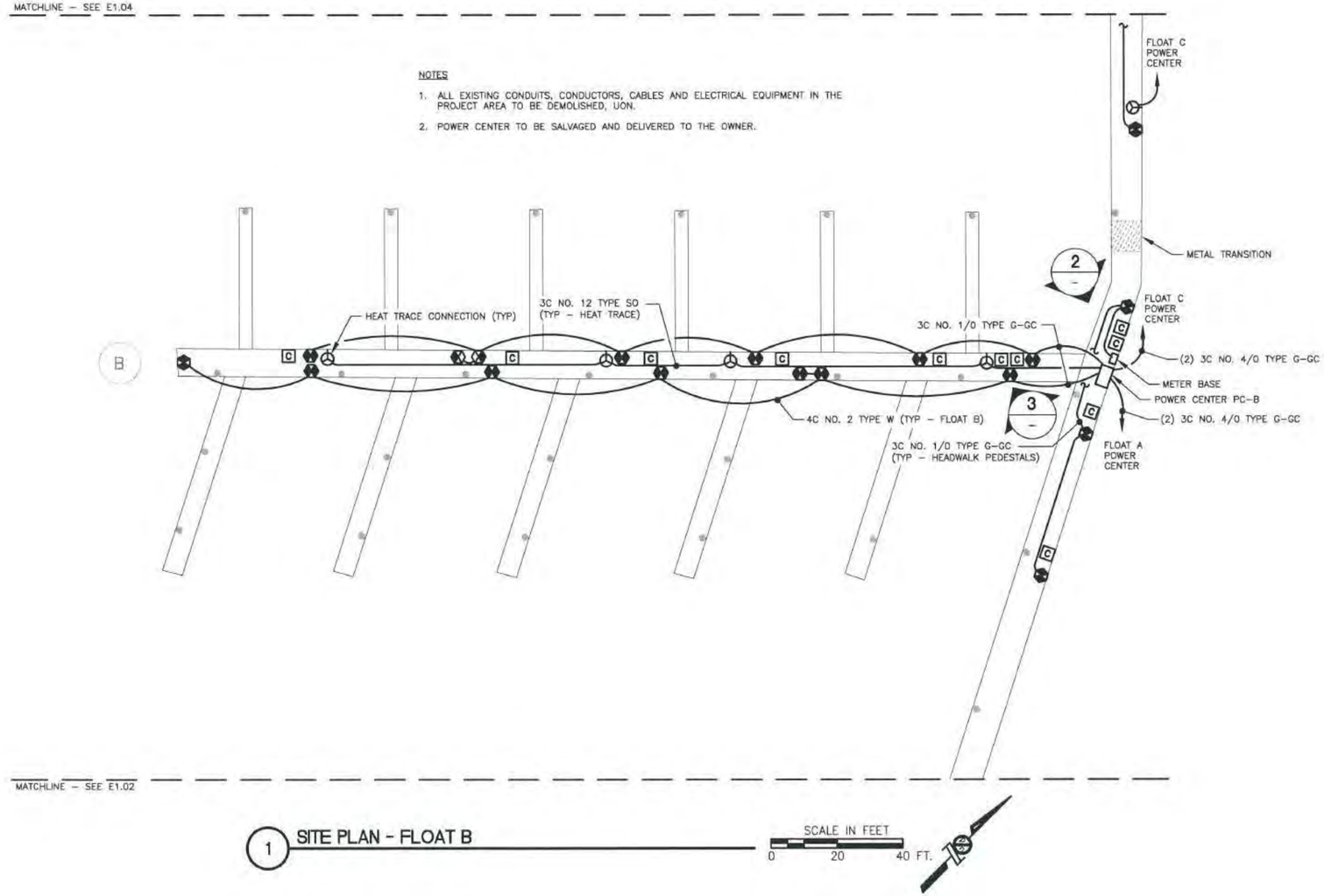

MATCHLINE – SEE E1.02

1 SITE PLAN - FLOAT B

SCALE IN FEET
0 20 40 FT.



2 PHOTO - FLOAT B POWER CENTER
NO SCALE



3 PHOTO - TELECOM AND SHORE-TIE PEDESTALS
NO SCALE

Mar 13, 2014 – 8:11am
F:\Projects\37 PND\95 Aurora Harbor Rebuild Phase I\Drawings\Working\E1.03.dwg (E1.00 tab)

CITY & BOROUGH OF JUNEAU DOCKS & HARBORS

HAIGHT & ASSOCIATES
526 Main Street, Juneau, AK 99801
(907) 586-9788

REVISIONS

REV.	DATE	DESCRIPTION	DWN.	CKD.	APP.

P N D ENGINEERS, INC.
9360 Glacier Highway, Ste. 100
Juneau, Alaska 99801
Phone: 907-586-2093
Fax: 907-586-2099
www.pndengineers.com

DESIGN: KHD/BCH CHECKED: BCH
DRAWN: KHD APPROVED: BCH
SCALE: AS SHOWN
DATE: Mar 13, 2014

STATE OF ALASKA 19th B.C. HAIGHT EE 4800 REGISTERED PROFESSIONAL ENGINEER

CITY & BOROUGH OF JUNEAU, ALASKA
AURORA HARBOR REBUILD - PHASE I
CONTRACT NO. DH 12-160

SHEET TITLE: SITE PLAN - FLOAT B EXISTING

PND PROJECT NO.: 122055 DWG. FILE:

E1.03
SHEET 4 OF 28



2 PHOTO - FLOAT C POWER CENTER
NO SCALE



3 PHOTO - SERVICE EQUIPMENT
NO SCALE



4 PHOTO - HEADWALK SHORE-TIE PEDESTAL
NO SCALE



5 PHOTO - FLOAT C SHORE-TIE PEDESTAL
NO SCALE



6 PHOTO - PANEL C
NO SCALE

MATCHLINE – SEE E1.05

NOTES

1. ALL EXISTING CONDUITS, CONDUCTORS, CABLES AND ELECTRICAL EQUIPMENT IN THE PROJECT AREA TO BE DEMOLISHED, UON.
2. POWER CENTER TO BE SALVAGED AND DELIVERED TO THE OWNER.
3. RETAIN GANGWAY LIGHTING.

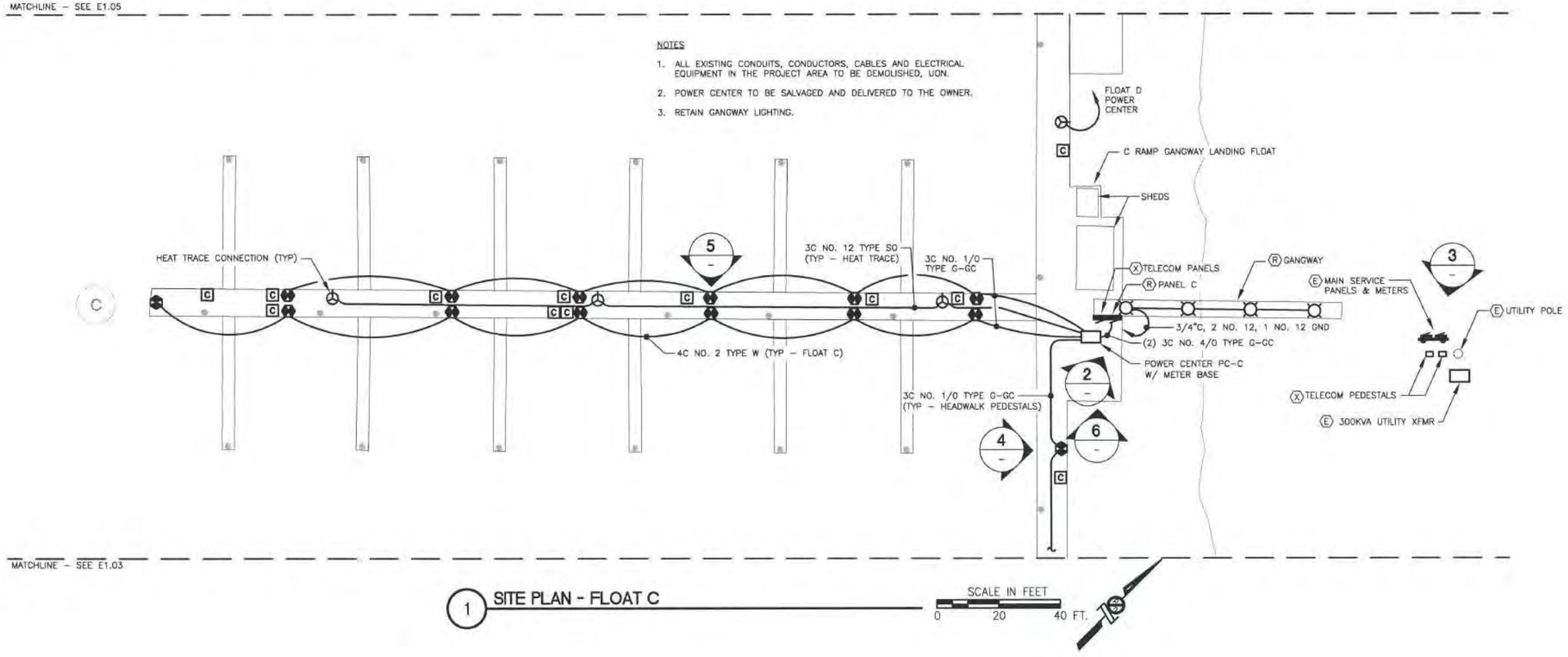

MATCHLINE – SEE E1.03

1 SITE PLAN - FLOAT C

SCALE IN FEET
0 20 40 FT.

Mar 13, 2014 – 8:11am
F:\Projects\37 PND\35 Aurora Harbor Rebuild Phase I\Drawings\Working\E1.04.dwg (E1.00 tab)

CITY & BOROUGH OF JUNEAU DOCKS & HARBORS

HAIGHT & ASSOCIATES
526 Main Street, Juneau, AK 99801
(907) 586-9788

REVISIONS

REV.	DATE	DESCRIPTION	DWN.	CKD.	APP.

PND ENGINEERS, INC.
9360 Glacier Highway, Ste. 100
Juneau, Alaska 99801
Phone: 907-586-2093
Fax: 907-586-2099
www.pndengineers.com

DESIGN: KHD/BCH CHECKED: BCH
DRAWN: KHD APPROVED: BCH
SCALE: AS SHOWN
DATE: Mar 13, 2014

STATE OF ALASKA B.C. HAIGHT 49UE EE 4800 PROFESSIONAL ENGINEER

CITY & BOROUGH OF JUNEAU, ALASKA
AURORA HARBOR REBUILD - PHASE I
CONTRACT NO. DH 12-160

SHEET TITLE: SITE PLAN - FLOAT C EXISTING

PND PROJECT NO.: 122055 DWG. FILE:

E1.04
SHEET 5 OF 28



2 PHOTO - FLOAT D POWER CENTER
NO SCALE



3 PHOTO - FLOAT D SHORE-TIE PEDESTAL
NO SCALE

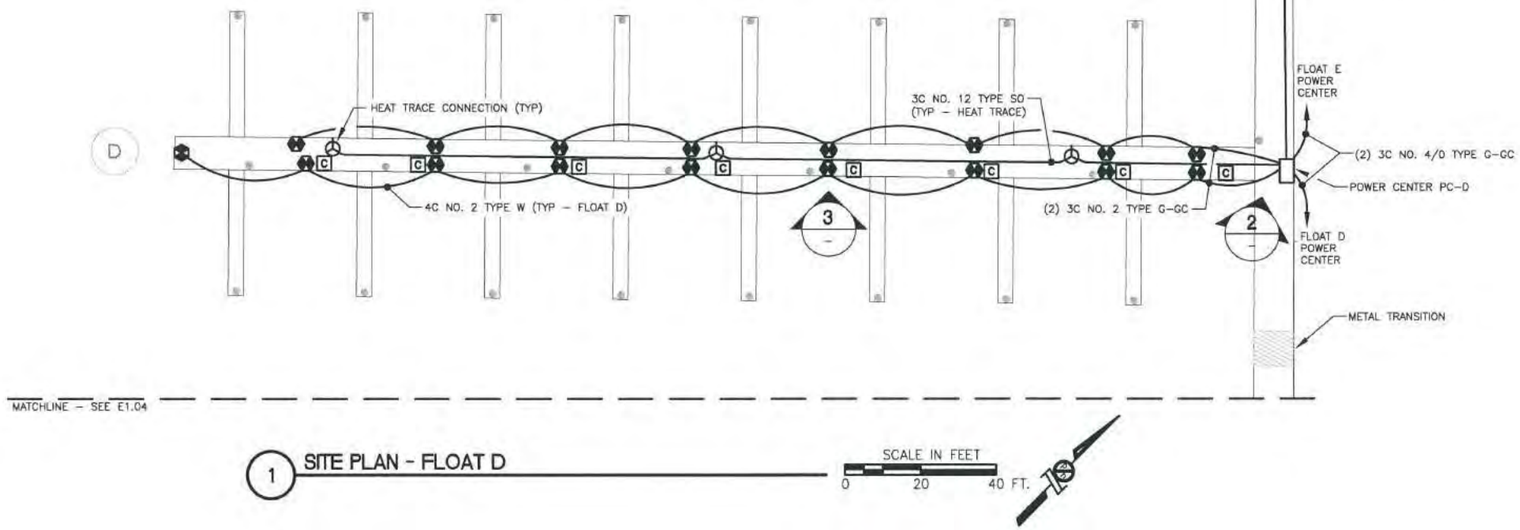

1 SITE PLAN - FLOAT D

NOTES

1. ALL EXISTING CONDUITS, CONDUCTORS, CABLES AND ELECTRICAL EQUIPMENT IN THE PROJECT AREA TO BE DEMOLISHED, UON.
2. POWER CENTER TO BE SALVAGED AND DELIVERED TO THE OWNER.

Mar 13, 2014 – 8:11am
F:\Projects\137 PH&D\05 Aurora Harbor Rebuild Phase I\Drawings\Working\E1.05.dwg (E1.00 tab)

CITY & BOROUGH OF JUNEAU DOCKS & HARBORS

HAIGHT & ASSOCIATES
526 Main Street, Juneau, AK 99801
(907) 586-9788

REVISIONS

REV.	DATE	DESCRIPTION	DWN.	CKD.	APP.

PND ENGINEERS, INC.
9360 Glacier Highway, Ste. 100
Juneau, Alaska 99801
Phone: 907-586-2093
Fax: 907-586-2099
www.pndengineers.com

DESIGN: KHD/BCH CHECKED: BCH
DRAWN: KHD APPROVED: BCH
SCALE: AS SHOWN
DATE: Mar 13, 2014

STATE OF ALASKA
B.C. HAIGHT
EE 4800
REGISTERED PROFESSIONAL ENGINEER

CITY & BOROUGH OF JUNEAU, ALASKA
AURORA HARBOR REBUILD - PHASE I
CONTRACT NO. DH 12-160

SHEET TITLE:
SITE PLAN - FLOAT D EXISTING

PND PROJECT NO.: 122055 DWG. FILE:

E1.05
SHEET 6 OF 28

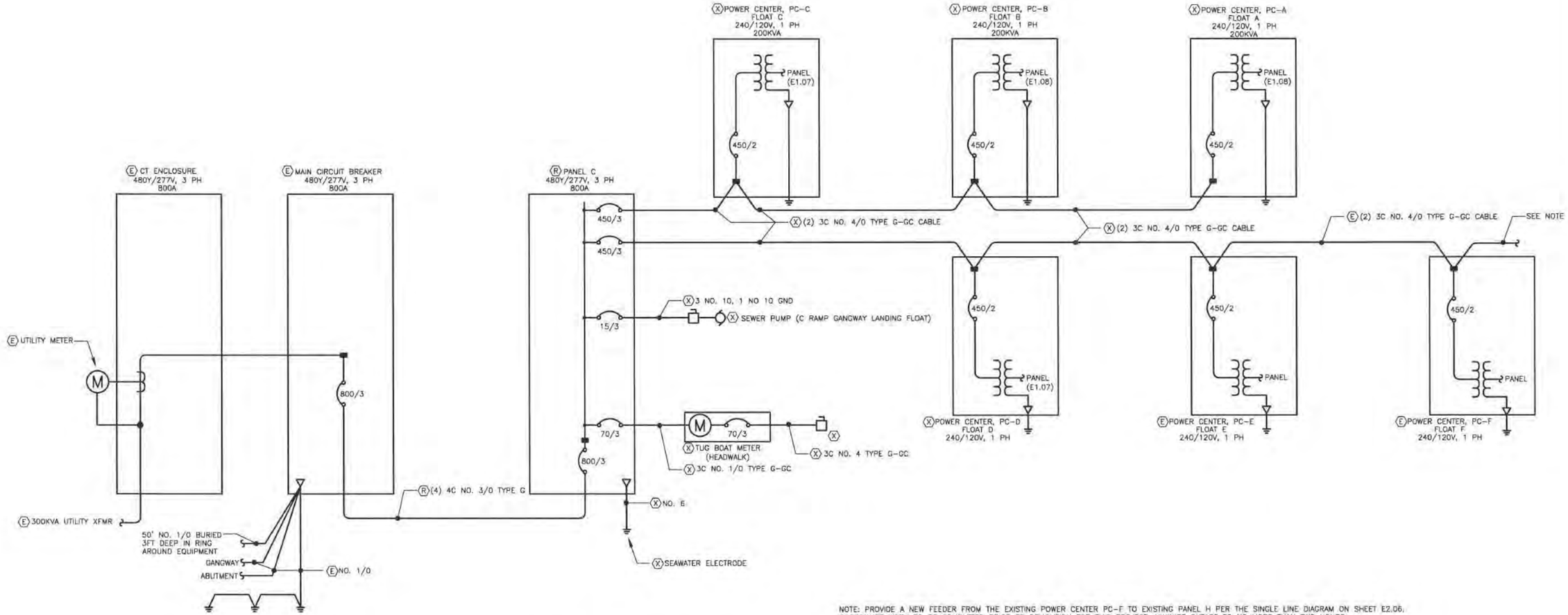

NOTE: PROVIDE A NEW FEEDER FROM THE EXISTING POWER CENTER PC-F TO EXISTING PANEL H PER THE SINGLE LINE DIAGRAM ON SHEET E2.06. COORDINATE WORK TO BE COMPLETED PRIOR TO DEMOLITION FOR THIS PROJECT. MINIMIZE OUTAGE TO NO MORE THAN TWO HOURS.

1 SINGLE LINE DIAGRAM - EXISTING AURORA HARBOR 480V DISTRIBUTION (SOUTH END)

NO SCALE

Mar 13, 2014 - 8:10am
P:\Projects\37 PND\06 Aurora Harbor Rebuild Phase I\Drawings\Working\E1.06.dwg (E1.00 tab)

CITY & BOROUGH OF JUNEAU — DOCKS & HARBORS

HAIGHT & ASSOCIATES
526 Main Street, Juneau, AK 99801
(907) 586-9788

REVISIONS

REV.	DATE	DESCRIPTION	DWN.	CKD.	APP.

PND ENGINEERS, INC.
9360 Glacier Highway, Ste. 100
Juneau, Alaska 99801
Phone: 907-586-2093
Fax: 907-586-2099
www.pndengineers.com

DESIGN: KHD/BCH CHECKED: BCH
DRAWN: KHD APPROVED: BCH
SCALE: AS SHOWN

STATE OF ALASKA 49th
B. C. HAIGHT
EE 4800
REGISTERED PROFESSIONAL ENGINEER
DATE: Mar 13, 2014

CITY & BOROUGH OF JUNEAU, ALASKA
AURORA HARBOR REBUILD - PHASE I
CONTRACT NO. DH 12-160

SHEET TITLE: **EXISTING SINGLE LINE DIAGRAMS**

PND PROJECT NO.: 122055 DWG. FILE:

E1.06
SHEET 7 OF 28

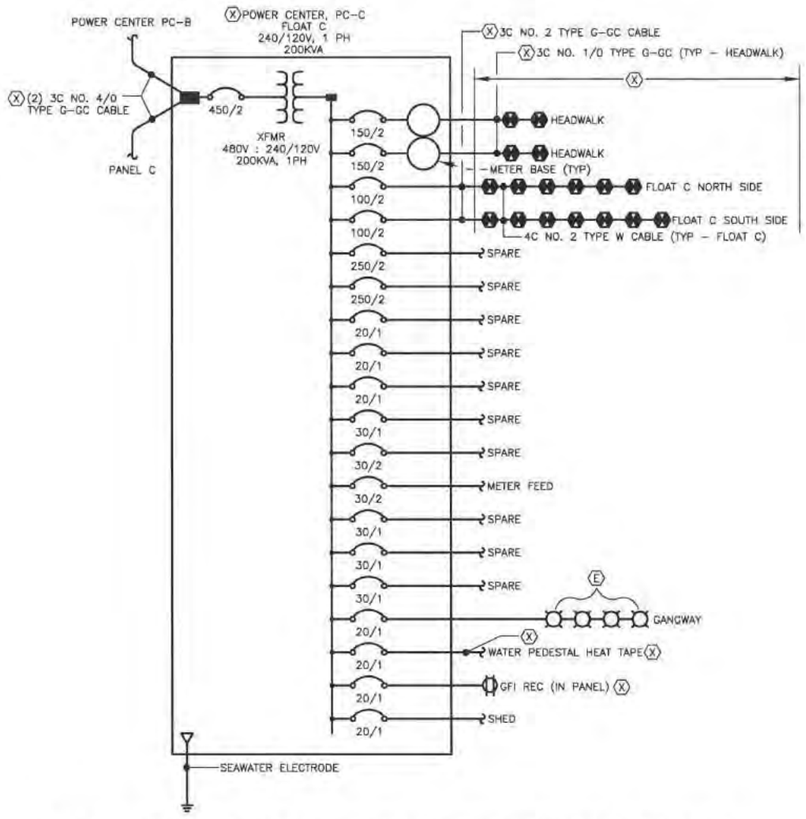

1 SINGLE LINE DIAGRAM - EXISTING POWER CENTER PC-C (120-240V)
NO SCALE

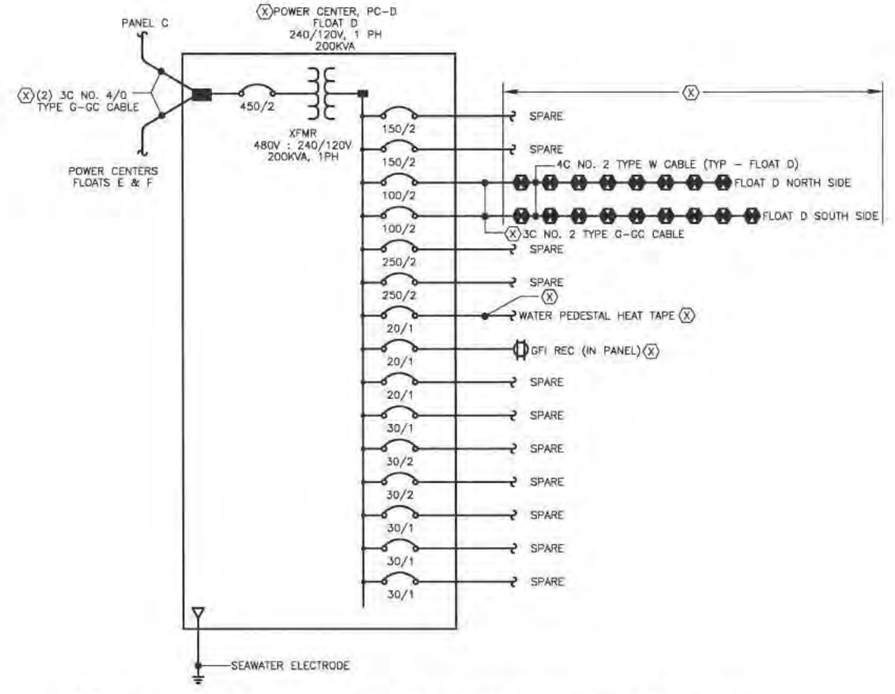

2 SINGLE LINE DIAGRAM - EXISTING POWER CENTER PC-D (120-240V)
NO SCALE

Mar 13, 2014 - 8:12pm
F:\Projects\37 PND\95 Aurora Harbor Rebuild Phase I\Drawings\Working\E1.07.dwg (E1.00 tab)

CITY & BOROUGH OF JUNEAU DOCKS & HARBORS

HAIGHT & ASSOCIATES
526 Main Street, Juneau, AK 99801
(907) 586-9788

REVISIONS

REV.	DATE	DESCRIPTION	DWN.	CKD.	APP.

P N D ENGINEERS, INC.
9360 Glacier Highway, Ste. 100
Juneau, Alaska 99801
Phone: 907-586-2093
Fax: 907-586-2099
www.pndengineers.com

DESIGN: KHD/BCH CHECKED: BCH
DRAWN: KHD APPROVED: BCH
SCALE: AS SHOWN

STATE OF ALASKA B.C. HAIGHT EE 4900 REGISTERED PROFESSIONAL ENGINEER
DATE: Mar 13, 2014

CITY & BOROUGH OF JUNEAU, ALASKA
AURORA HARBOR REBUILD - PHASE I
CONTRACT NO. DH 12-160

SHEET TITLE:
EXISTING SINGLE LINE DIAGRAMS

PND PROJECT NO.: 122055 DWG. FILE:

E1.07
SHEET 8 OF 28

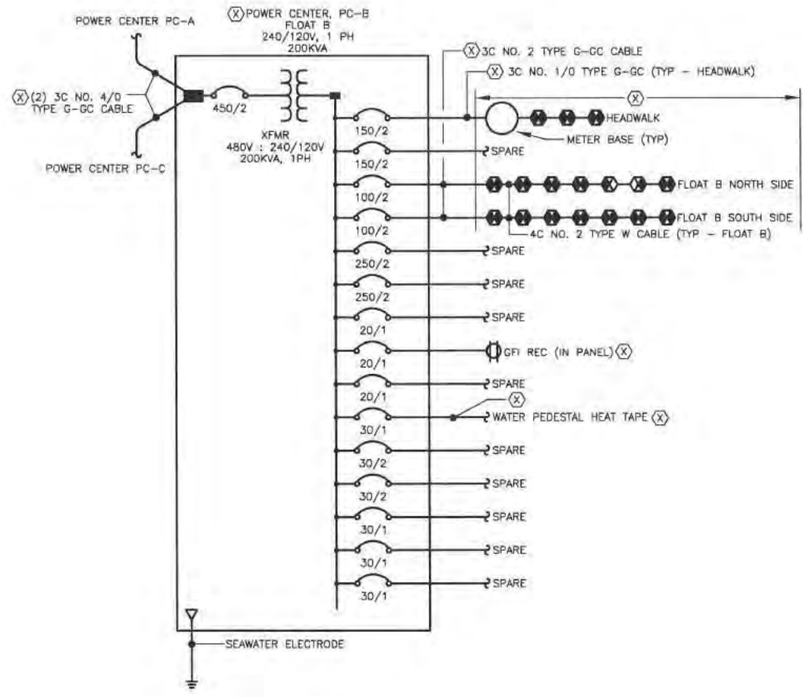

1 SINGLE LINE DIAGRAM - EXISTING POWER CENTER PC-B (120-240V)
NO SCALE

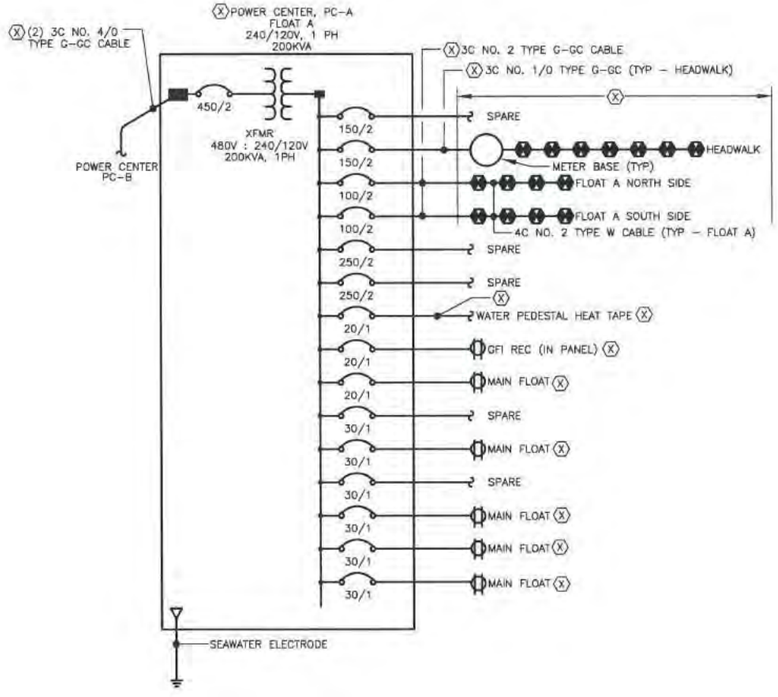

2 SINGLE LINE DIAGRAM - EXISTING POWER CENTER PC-A (120-240V)
NO SCALE

Mar 13, 2014 - 8:12am
F:\Projects\137 PHASE\05 Aurora Harbor Rebuild Phase I\Drawings\Working\E1.08.dwg (E1.00 tab)

CITY & BOROUGH OF JUNEAU DOCKS & HARBORS

HAIGHT & ASSOCIATES
526 Main Street, Juneau, AK 99801
(907) 586-9788

REVISIONS

REV.	DATE	DESCRIPTION	DWN.	CKD.	APP.

PND ENGINEERS, INC.
9360 Glacier Highway, Ste. 100
Juneau, Alaska 99801
Phone: 907-586-2093
Fax: 907-586-2099
www.pndengineers.com

DESIGN: KHD/BCH CHECKED: BCH
DRAWN: KHD APPROVED: BCH
SCALE: AS SHOWN
DATE: Mar 13, 2014

STATE OF ALASKA
B.C. HAIGHT
EE 4600
REGISTERED PROFESSIONAL ENGINEER

CITY & BOROUGH OF JUNEAU, ALASKA
AURORA HARBOR REBUILD - PHASE I
CONTRACT NO. DH 12-160

SHEET TITLE:
EXISTING SINGLE LINE DIAGRAMS

PND PROJECT NO.: 122055 DWG. FILE:

E1.08
SHEET 9 OF 28

NOTES

1. ALL PILING MOUNTED LUMINAIRES AND OVERHEAD LIGHTING CIRCUITS IN THE PROJECT AREA TO BE DEMOLISHED, UON.
2. CANOPY LIGHTING TO REMAIN ATTACHED TO GANGWAY. REMOVE THE CIRCUIT TO GANGWAY.
3. ALL LUMINAIRES AND LIGHTING CIRCUITS NORTH OF FLOAT D TO REMAIN.
4. POLE MOUNTED LIGHTING TRANSFORMER TO BE RETAINED TO FEED THE NORTH END OF HARBOR. (SEE E3.02)
5. COORDINATE WORK WITH AEL&P.

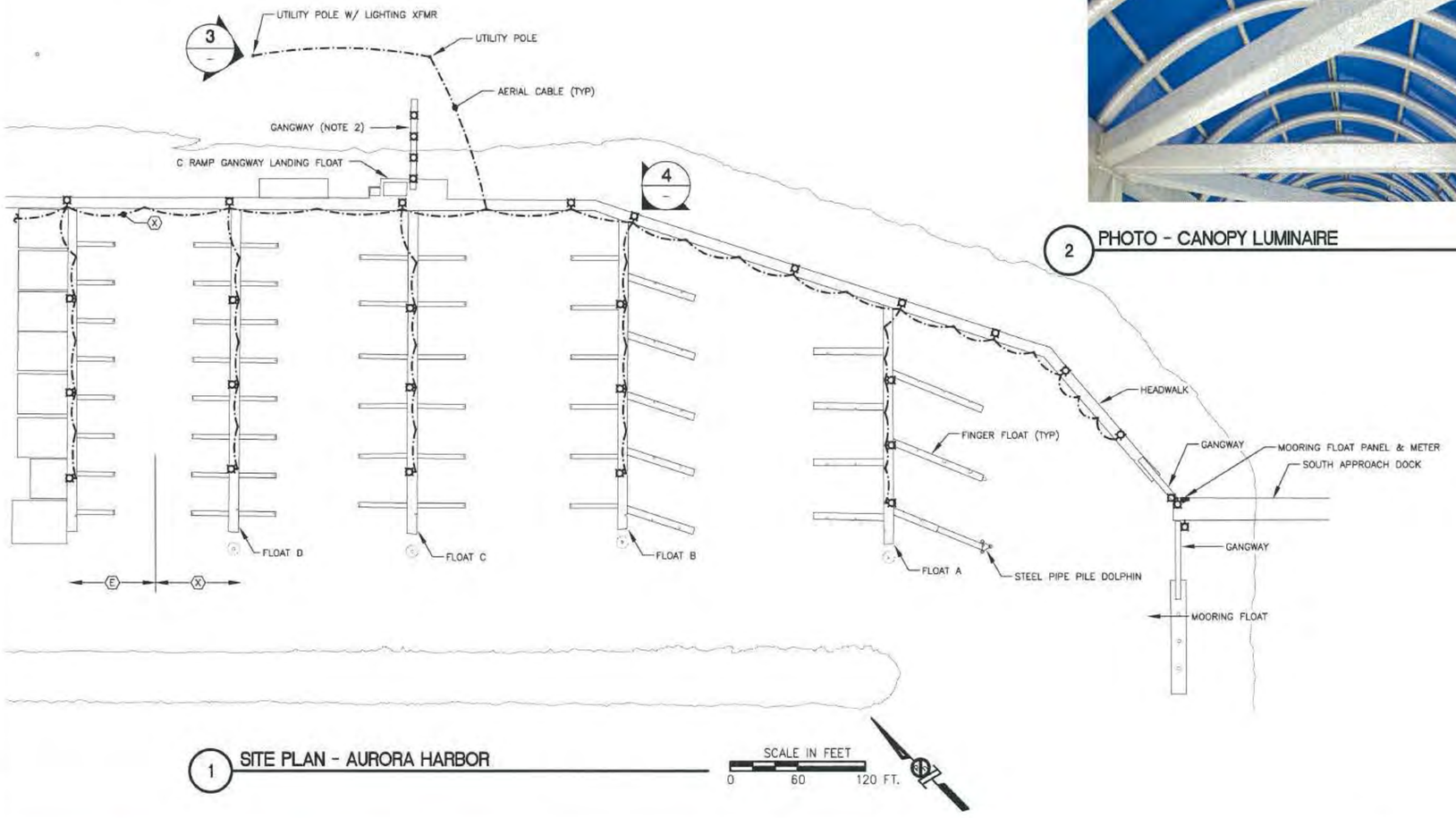

1 SITE PLAN - AURORA HARBOR



2 PHOTO - CANOPY LUMINAIRE

NO SCALE



3 PHOTO - UTILITY POLE W/ LIGHTING XFMR

NO SCALE



4 PHOTO - PILING MOUNTED LUMINAIRE

NO SCALE

Mar 13, 2014 - 8:13am
F:\Projects\37 PN&D\95 Aurora Harbor Rebuild Phase I\Drawings\Working\E1.09.dwg (E1.00 tab)

CITY & BOROUGH OF JUNEAU DOCKS & HARBORS

HAIGHT & ASSOCIATES
526 Main Street, Juneau, AK 99801
(907) 586-9788

REVISIONS

REV.	DATE	DESCRIPTION	DWN.	CKD.	APP.

P N D ENGINEERS, INC.
9360 Glacier Highway, Ste. 100
Juneau, Alaska 99801
Phone: 907-586-2093
Fax: 907-586-2099
www.pndengineers.com

DESIGN: KHD/BCH CHECKED: BCH
DRAWN: KHD APPROVED: BCH
SCALE: AS SHOWN

STATE OF ALASKA 49th BCH HAIGHT EE 4880 REGISTERED PROFESSIONAL ENGINEER
DATE: Mar 13, 2014

CITY & BOROUGH OF JUNEAU, ALASKA
AURORA HARBOR REBUILD - PHASE I
CONTRACT NO. DH 12-160

SHEET TITLE: EXISTING LIGHTING

PND PROJECT NO.: 122055 DWG. FILE:

E1.09
SHEET 10 OF 28

APPROACH DOCK SHORE-TIE SCHEDULE

PEDESTAL DESIGNATION	RECEPTACLE			CONNECTION PHASE	LIGHT
	AMPS	VOLTS	PHASE		
T1	-	-	-		ONLY
T2	-	-	-		ONLY
HW1	30,50	208Y/120	3	C,BC	NO
HW2	30,50	208Y/120	3	A,AC	YES
HW3	-	-	-		ONLY

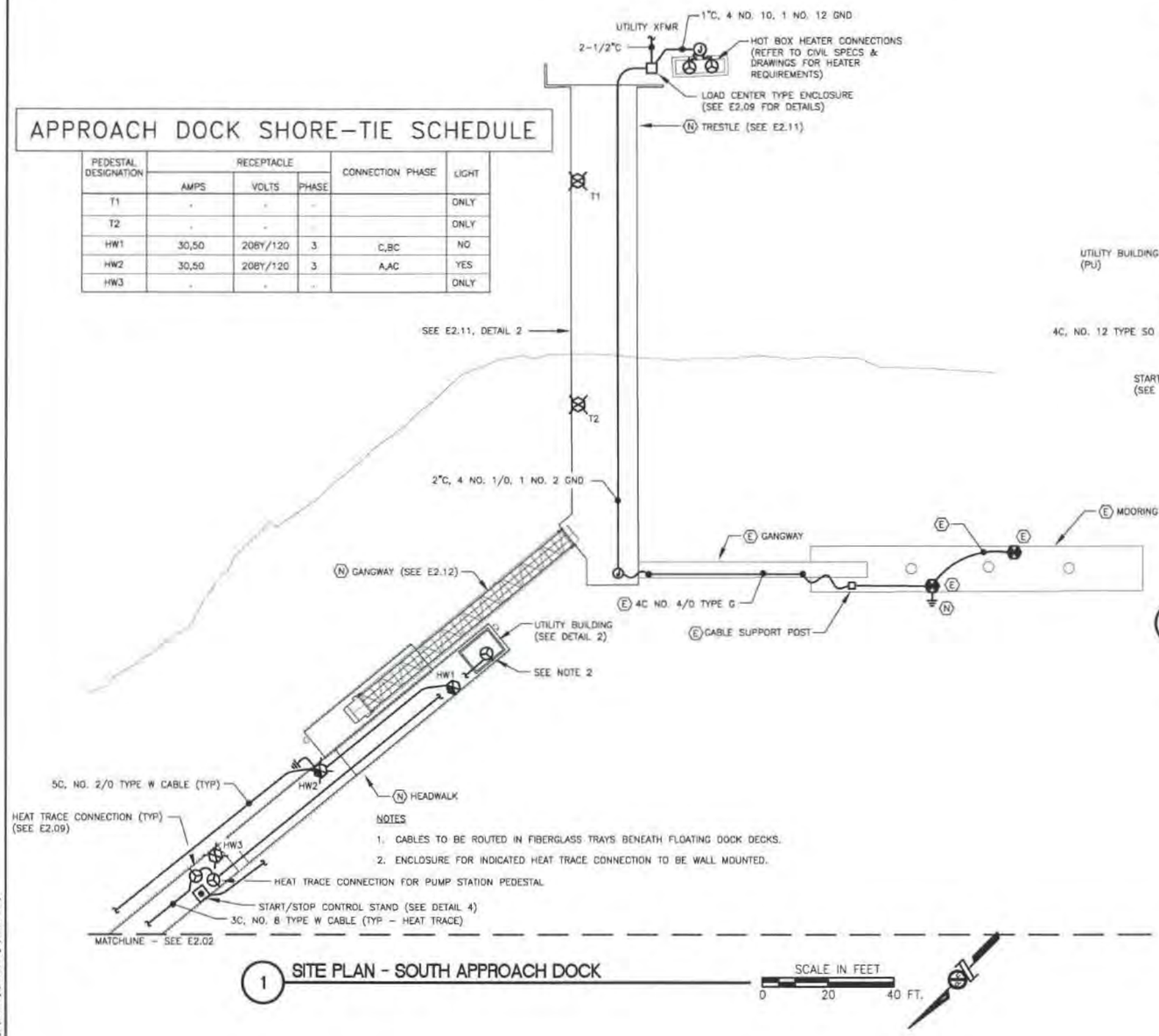

NOTES

1. CABLES TO BE ROUTED IN FIBERGLASS TRAYS BENEATH FLOATING DOCK DECKS.
2. ENCLOSURE FOR INDICATED HEAT TRACE CONNECTION TO BE WALL MOUNTED.

1 SITE PLAN - SOUTH APPROACH DOCK — SCALE IN FEET 0 20 40 FT.

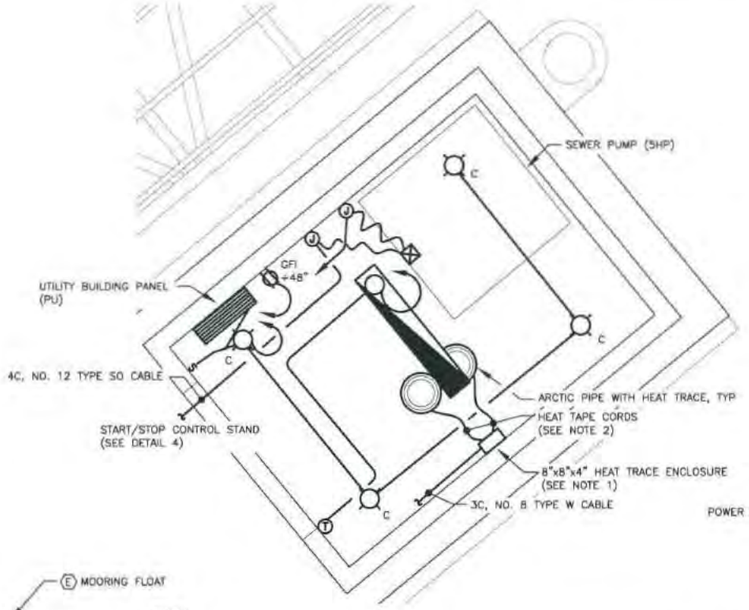

NOTES

1. HEAT TRACE ENCLOSURE TO CONTAIN (2) RECEPTACLES FOR HEAT TAPE CONNECTIONS.
2. HEAT TAPE CORDS TO RUN ALONG FLOOR FROM ENCLOSURE TO ARCTIC PIPES.

2 FLOOR PLAN - UTILITY BUILDING — SCALE IN FEET 0 2' 4'

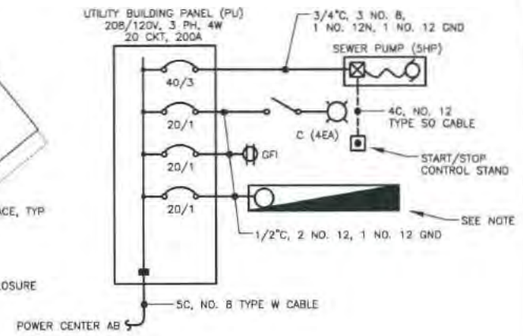

NOTE: INFRARED HEATER TO BE CEILING MOUNTED. BASIS OF DESIGN: Q-MARK MODEL HRK41512. MOUNT ABOVE 8FT.

3 SINGLE LINE DIAGRAM - UTILITY BUILDING — NO SCALE

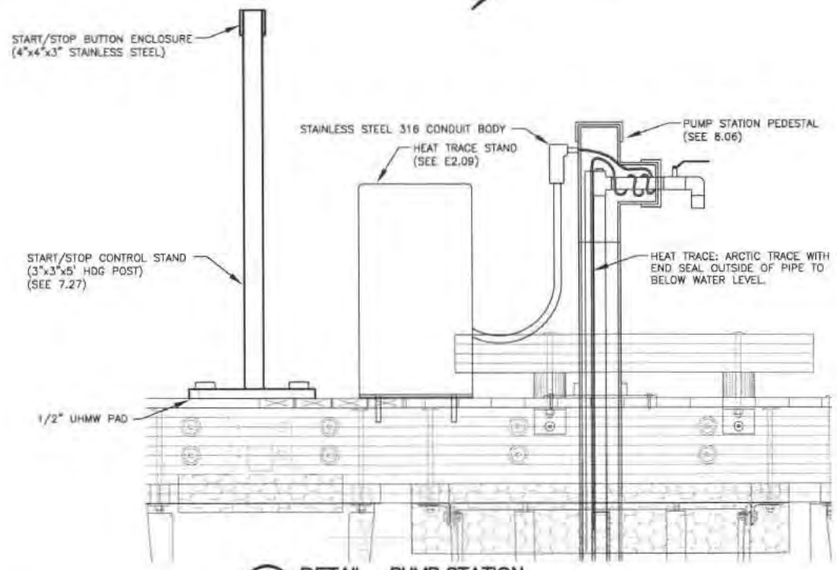

4 DETAIL - PUMP STATION — NO SCALE

Mar 13, 2014 - 8:13am
F:\Projects\137 PND\085 Aurora Harbor Rebuild Phase I\Drawings\Working\E2.01.dwg (E1.00 tab)

CITY & BOROUGH OF JUNEAU DOCKS & HARBORS

HAIGHT & ASSOCIATES
526 Main Street, Juneau, AK 99801
(907) 586-9788

REVISIONS

REV.	DATE	DESCRIPTION	DWN.	CKD.	APP.

PND ENGINEERS, INC.
9360 Glacier Highway, Ste. 100
Juneau, Alaska 99801
Phone: 907-586-2093
Fax: 907-586-2099
www.pndengineers.com

DESIGN: KHD/BCH CHECKED: BCH
DRAWN: KHD APPROVED: BCH
SCALE: AS SHOWN

STATE OF ALASKA B.C. HAIGHT EE 14800 REGISTERED PROFESSIONAL ENGINEER
DATE: Mar 13, 2014

CITY & BOROUGH OF JUNEAU, ALASKA
AURORA HARBOR REBUILD - PHASE I
CONTRACT NO. DH 12-160

SHEET TITLE:
SITE PLAN - SOUTH APPROACH DOCK NEW

PND PROJECT NO.: 122055 DWG. FILE:

E2.01
SHEET 11 OF 28

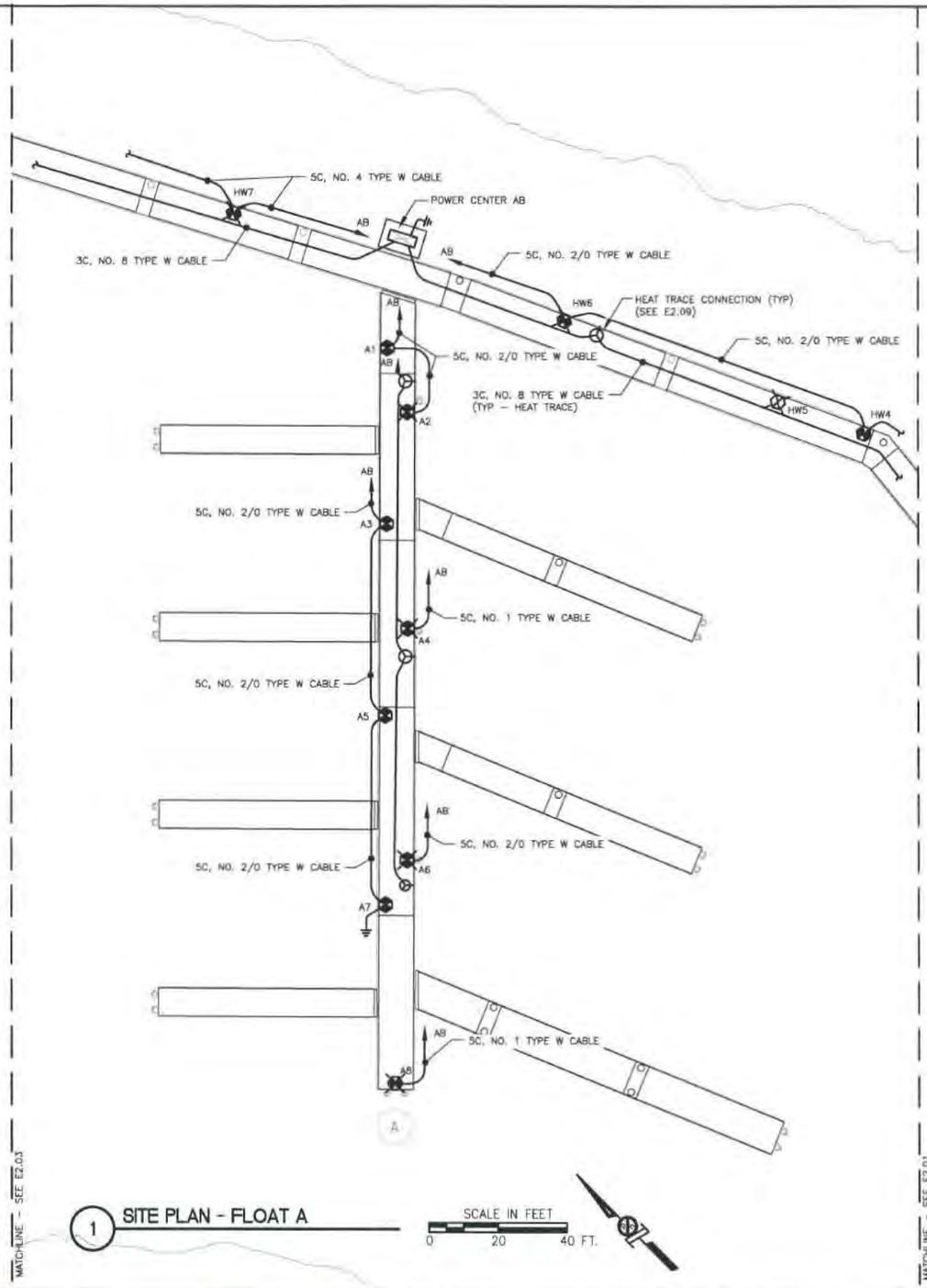

1 SITE PLAN - FLOAT A

SCALE IN FEET
0 20 40 FT.

NOTE: CABLES TO BE ROUTED IN FIBERGLASS TRAYS BENEATH FLOATING DOCK DECKS.

A FLOAT SHORE-TIE SCHEDULE

PEDESTAL DESIGNATION	RECEPTACLE			CONNECTION PHASE	LIGHT
	AMPS	VOLTS	PHASE		
HW4	30,50/30,50	208Y/120	3	B,AB/A,AC	NO
HW5	-	-	-	-	ONLY
HW6	30,50/30,50	208Y/120	3	C,BC/B,AB	YES
HW7	30/30	120	1	A/C	YES
A1	30,50/30,50	208Y/120	3	B,AB/A,AC	NO
A2	30,50/30,50	208Y/120	3	C,BC/B,AB	YES
A3	30,50/30,50	208Y/120	3	A,AC/C,BC	NO
A4	30,50,100/30,50	208Y/120	3	B,AB,ABC/A,AC	YES
A5	30,50/30,50	208Y/120	3	C,BC/B,AB	NO
A6	30,50,100/30,50,100	208Y/120	3	A,AC,ABC/C,BC,ABC	YES
A7	30,50/30,50	208Y/120	3	B,AB/A,AC	NO
A8	30,50,100/30,50	208Y/120	3	C,BC,ABC/B,AB	YES

Mar 13, 2014 - 8:13am
P:\Projects\127 PND\35 Aurora Harbor Rebuild Phase I\Drawings\Working\E2.02.dwg (E1.00 tab)

CITY & BOROUGH OF JUNEAU DOCKS & HARBORS

HAIGHT & ASSOCIATES
526 Main Street, Juneau, AK 99801
(907) 586-9788

REVISIONS

REV.	DATE	DESCRIPTION	DWN.	CKD.	APP.

PND ENGINEERS, INC.
9360 Glacier Highway, Ste. 100
Juneau, Alaska 99801
Phone: 907-586-2093
Fax: 907-586-2099
www.pndengineers.com

DESIGN: KHD/BCH CHECKED: BCH
DRAWN: KHD APPROVED: BCH
SCALE: AS SHOWN

STATE OF ALASKA – BRIC HAIGHT – EE 4800 – REGISTERED PROFESSIONAL ENGINEER
DATE: Mar 13, 2014

CITY & BOROUGH OF JUNEAU, ALASKA
AURORA HARBOR REBUILD - PHASE I
CONTRACT NO. DH 12-160

SHEET TITLE: SITE PLAN - FLOAT A NEW

PND PROJECT NO.: 122055 DWG. FILE:

E2.02
SHEET 12 OF 28

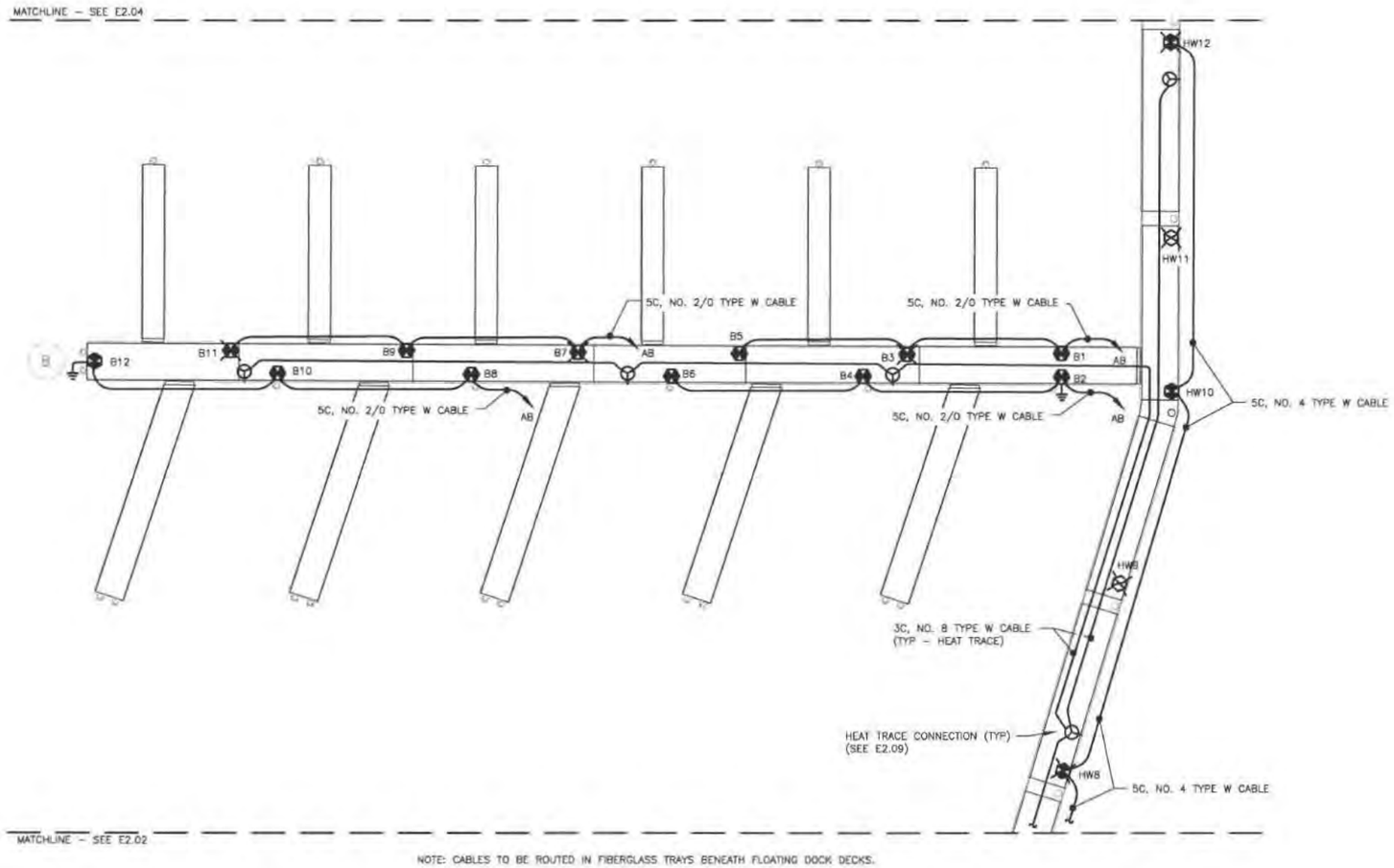

NOTE: CABLES TO BE ROUTED IN FIBERGLASS TRAYS BENEATH FLOATING DOCK DECKS.

B FLOAT SHORE–TIE SCHEDULE

PEDESTAL DESIGNATION	RECEPTACLE			CONNECTION PHASE	LIGHT
	AMPS	VOLTS	PHASE		
HW8	30/30	120	1	B/A	YES
HW9	"	"	"		ONLY
HW10	30/30	120	1	C/B	NO
HW11	"	"	"		ONLY
HW12	30/30	120	1	A/C	YES
B1	30,50/30,50	208Y/120	3	A,AC/C,BC	NO
B2	30,50/30,50	208Y/120	3	B,AB/A,AC	NO
B3	30,50/30,50	208Y/120	3	C,BC/B,AB	YES
B4	30,50/30,50	208Y/120	3	A,AC/C,BC	NO
B5	30,50/30,50	208Y/120	3	B,AB/A,AC	NO
B6	30,50/30,50	208Y/120	3	C,BC/B,AB	NO
B7	30,50/30,50	208Y/120	3	A,AC/C,BC	YES
B8	30,50/30,50	208Y/120	3	B,AB/A,AC	NO
B9	30,50/30,50	208Y/120	3	C,BC/B,AB	NO
B10	30,50/30,50	208Y/120	3	A,AC/C,BC	NO
B11	30,50/30,50	208Y/120	3	B,AB/A,AC	YES
B12	30,50/30,50	208Y/120	3	C,BC/B,AB	NO

1 SITE PLAN - FLOAT B

SCALE IN FEET
0 20 40 FT.

Mar 13, 2014 – 8:14am
F:\Projects\137 PND\GIS Aurora Harbor Rebuild Phase I\Drawings\Working\E2.03.dwg (E1.00 tab)

CITY & BOROUGH OF JUNEAU DOCKS & HARBORS

HAIGHT & ASSOCIATES
526 Main Street, Juneau, AK 99801
(907) 586-9788

REVISIONS

REV.	DATE	DESCRIPTION	DWN.	CKD.	APP.

P N D ENGINEERS, INC.
9360 Glacier Highway, Ste. 100
Juneau, Alaska 99801
Phone: 907-586-2093
Fax: 907-586-2099
www.pndengineers.com

DESIGN: KHD/BCH CHECKED: BCH
DRAWN: KHD APPROVED: BCH
SCALE: AS SHOWN
DATE: Mar 13, 2014

STATE OF ALASKA – B.C. HAIGHT – EE 4880 – REGISTERED PROFESSIONAL ENGINEER

CITY & BOROUGH OF JUNEAU, ALASKA
AURORA HARBOR REBUILD - PHASE I
CONTRACT NO. DH 12-160

SHEET TITLE: SITE PLAN - FLOAT B NEW

PND PROJECT NO.: 122055 DWG. FILE:

E2.03 SHEET 13 OF 28

C FLOAT SHORE–TIE SCHEDULE

PEDESTAL DESIGNATION	RECEPTACLE			CONNECTION PHASE	LIGHT
	AMPS	VOLTS	PHASE		
HW13	-	-	1		ONLY
HW14	-	-	1		ONLY
T3	-	-	1		ONLY
C1	30,50/30,50	208Y/120	3	A,AC/C,BC	NO
C2	30,50/30,50	208Y/120	3	B,AB/A,AC	NO
C3	30,50/30,50	208Y/120	3	C,BC/B,AB	YES
C4	30,50/30,50	208Y/120	3	A,AC/C,BC	NO
C5	30,50/30,50	208Y/120	3	B,AB/A,AC	NO
C6	30,50/30,50	208Y/120	3	C,BC/B,AB	NO
C7	30,50/30,50	208Y/120	3	A,AC/C,BC	YES
C8	30,50/30,50	208Y/120	3	B,AB/A,AC	NO
C9	30,50/30,50	208Y/120	3	C,BC/B,AB	NO
C10	30,50/30,50	208Y/120	3	A,AC/C,BC	NO
C11	30,50/30,50	208Y/120	3	B,AB/A,AC	YES
C12	30,50/30,50	208Y/120	3	C,BC/B,AB	NO
C13	30,50/30,50	208Y/120	3	A,AC/C,BC	NO

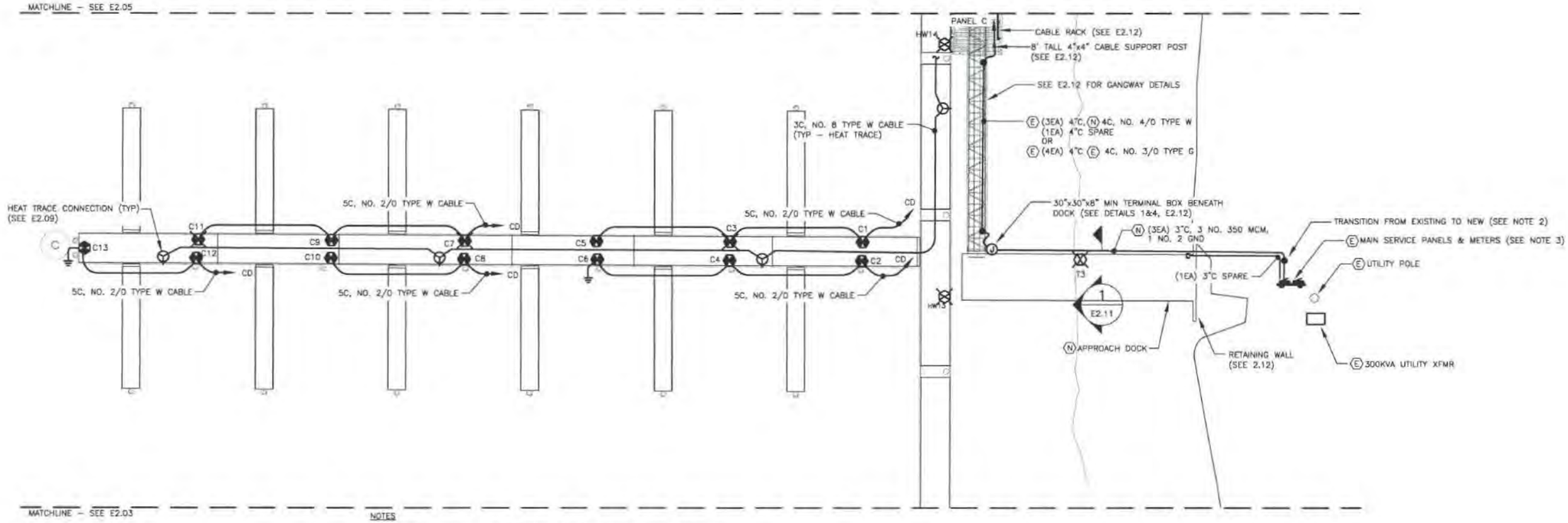

NOTES

1. CABLES TO BE ROUTED IN FIBERGLASS TRAYS BENEATH FLOATING DOCK DECKS.
2. NEW CONDUITS TO BE CONNECTED TO EXISTING CONDUITS BENEATH APPROACH APRON.
3. DATUM PLANE PLACARD (PER NEC) TO BE PLACED ON MAIN SERVICE PANEL.

1 SITE PLAN - FLOAT C

SCALE IN FEET
0 20 40 FT.

Mar 13, 2014 – 8:14am
F:\Projects\137 PND\GIS Aurora Harbor Rebuild Phase I\Drawings\Working\E2.04.dwg (E1.00 tab)

CITY & BOROUGH OF JUNEAU DOCKS & HARBORS

HAIGHT & ASSOCIATES
526 Main Street, Juneau, AK 99801
(907) 586-9788

REVISIONS

REV.	DATE	DESCRIPTION	DWN.	CKD.	APP.

PND ENGINEERS, INC.
9360 Glacier Highway, Ste. 100
Juneau, Alaska 99801
Phone: 907-586-2093
Fax: 907-586-2099
www.pndengineers.com

DESIGN: KHD/BCH CHECKED: BCH
DRAWN: KHD APPROVED: BCH
SCALE: AS SHOWN

STATE OF ALASKA 49th B.C. HAIGHT EE 4800
DATE: Mar 13, 2014

CITY & BOROUGH OF JUNEAU, ALASKA
AURORA HARBOR REBUILD - PHASE I
CONTRACT NO. DH 12-160

SHEET TITLE: SITE PLAN - FLOAT C NEW

PND PROJECT NO.: 122055 DWG. FILE:

E2.04 SHEET 14 OF 28

D FLOAT SHORE-TIE SCHEDULE

PEDESTAL DESIGNATION	RECEPTACLE			CONNECTION PHASE	LIGHT
	AMPS	VOLTS	PHASE		
HW15	-	-	1		ONLY
HW16	30/30	120	1	B/A	YES
D1	30,50/30,50	208Y/120	3	C,BC/B,AB	NO
D2	30,50/30,50	208Y/120	3	A,AC/C,BC	NO
D3	30,50/30,50	208Y/120	3	B,AB/A,AC	YES
D4	30,50/30,50	208Y/120	3	C,BC/B,AB	NO
D5	30,50/30,50	208Y/120	3	A,AC/C,BC	NO
D6	30,50/30,50	208Y/120	3	B,AB/A,AC	NO
D7	30,50/30,50	208Y/120	3	C,BC/B,AB	YES
D8	30,50/30,50	208Y/120	3	A,AC/C,BC	NO
D9	30,50/30,50	208Y/120	3	B,AB/A,AC	NO
D10	30,50/30,50	208Y/120	3	C,BC/B,AB	NO
D11	30,50/30,50	208Y/120	3	A,AC/C,BC	YES
D12	30,50/30,50	208Y/120	3	B,AB/A,AC	NO
D13	30,50/30,50	208Y/120	3	C,BC/B,AB	NO
D14	30,50/30,50	208Y/120	3	A,AC/C,BC	NO
D15	30,50/30,50	208Y/120	3	B,AB/A,AC	YES
D16	30,50/30,50	208Y/120	3	C,BC/B,AB	NO
D17	30,50/30,50	208Y/120	3	A,AC/C,BC	NO

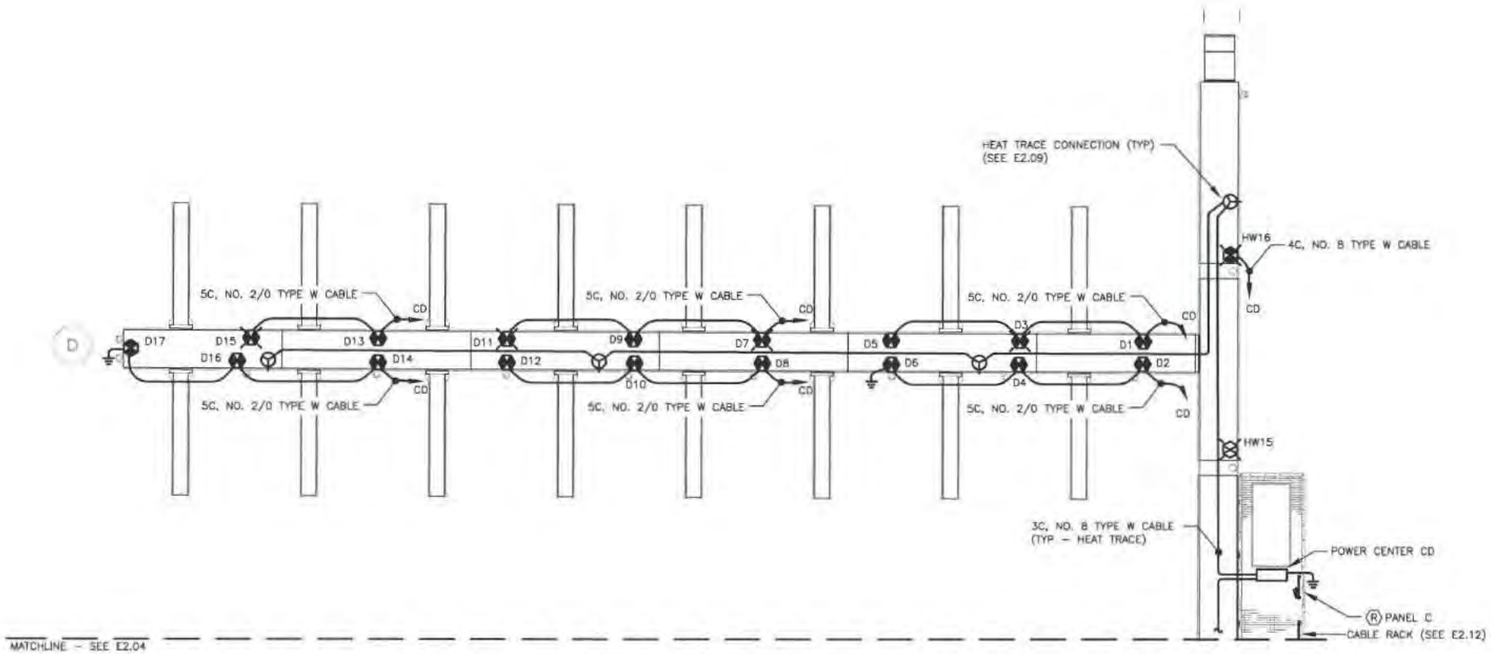

NOTE: CABLES TO BE ROUTED IN FIBERGLASS TRAYS BENEATH FLOATING DOCK DECKS.

1 SITE PLAN - FLOAT D

SCALE IN FEET
0 20 40 FT.

Mar 13, 2014 - 8:14am
F:\Projects\137 PH&E\95 Aurora Harbor Rebuild Phase I\Drawings\Working\E2.05.dwg (E1.00 tab)

CITY & BOROUGH OF JUNEAU DOCKS & HARBORS

HAIGHT & ASSOCIATES
526 Main Street, Juneau, AK 99801
(907) 586-9788

REVISIONS

REV.	DATE	DESCRIPTION	DWN.	CKD.	APP.

PND ENGINEERS, INC.
9360 Glacier Highway, Ste. 100
Juneau, Alaska 99801
Phone: 907-586-2093
Fax: 907-586-2099
www.pndengineers.com

DESIGN: KHD/BCH CHECKED: BCH
DRAWN: KHD APPROVED: BCH
SCALE: AS SHOWN
DATE: Mar 13, 2014

STATE OF ALASKA * 1918 * R. HAIGHT EE 4800

CITY & BOROUGH OF JUNEAU, ALASKA
AURORA HARBOR REBUILD - PHASE I
CONTRACT NO. DH 12-160

SHEET TITLE: SITE PLAN - FLOAT D NEW

PND PROJECT NO.: 122055 DWG. FILE:

E2.05 SHEET 15 OF 28

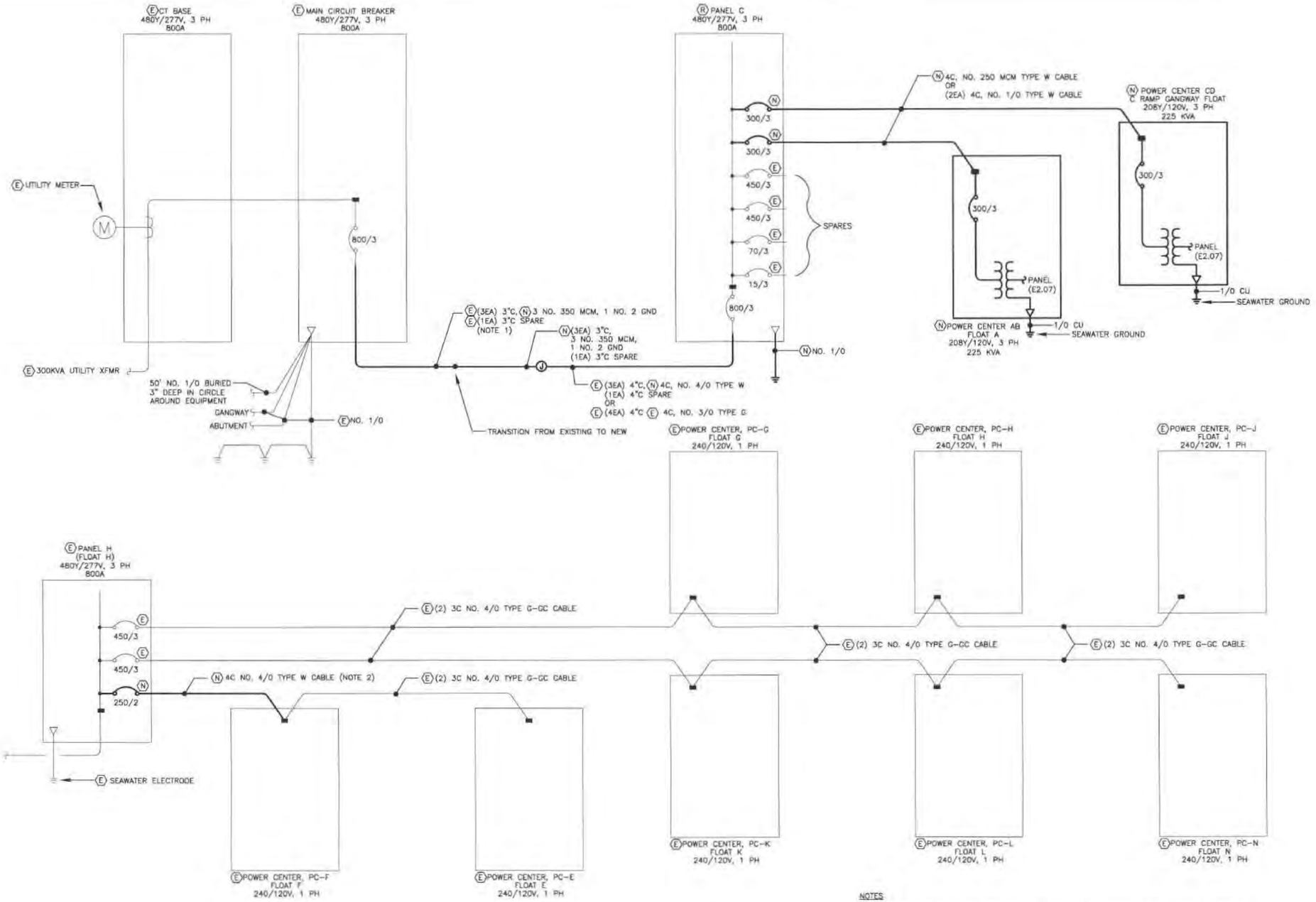

1 SINGLE LINE DIAGRAM - NEW AURORA HARBOR 480V DISTRIBUTION

NO SCALE

NOTES

1. EXISTING CONDUIT ROUTED FROM SERVICE EQUIPMENT TO APPROACH DOCK APRON. EXTEND TO AND BENEATH APPROACH DOCK TO GANGWAY C.
2. PROVIDE A NEW FEEDER FROM THE EXISTING POWER CENTER PC-F TO EXISTING PANEL H. COORDINATE WORK TO BE COMPLETED PRIOR TO DEMOLITION FOR THIS PROJECT. MINIMIZE OUTAGE TO NO MORE THAN TWO HOURS.

Mar 13, 2014 – 8:14am
I:\Projects\137 PND\105 Aurora Harbor Rebuild Phase I\Drawings\Working\E2.06.dwg (E1.06 tab)

HAIGHT & ASSOCIATES
526 Main Street, Juneau, AK 99801
(907) 586-9788

REVISIONS

REV.	DATE	DESCRIPTION	DWN.	CKD.	APP.

PND ENGINEERS, INC.
9360 Glacier Highway, Ste 100
Juneau, Alaska 99801
Phone: 907-586-2093
Fax: 907-586-2099
www.pndengineers.com

DESIGN: KHD/BCH CHECKED: BCH
DRAWN: KHD APPROVED: BCH
SCALE: AS SHOWN

STATE OF ALASKA — BRIAN C. HAIGHT — EE 4800 — REGISTERED PROFESSIONAL ENGINEER
DATE: Mar 13, 2014

CITY & BOROUGH OF JUNEAU, ALASKA
AURORA HARBOR REBUILD - PHASE I
CONTRACT NO. DH 12-160

SHEET TITLE: **NEW SINGLE LINE DIAGRAMS**

PND PROJECT NO.: 122055 DWG. FILE:

E2.06
SHEET 16 OF 28

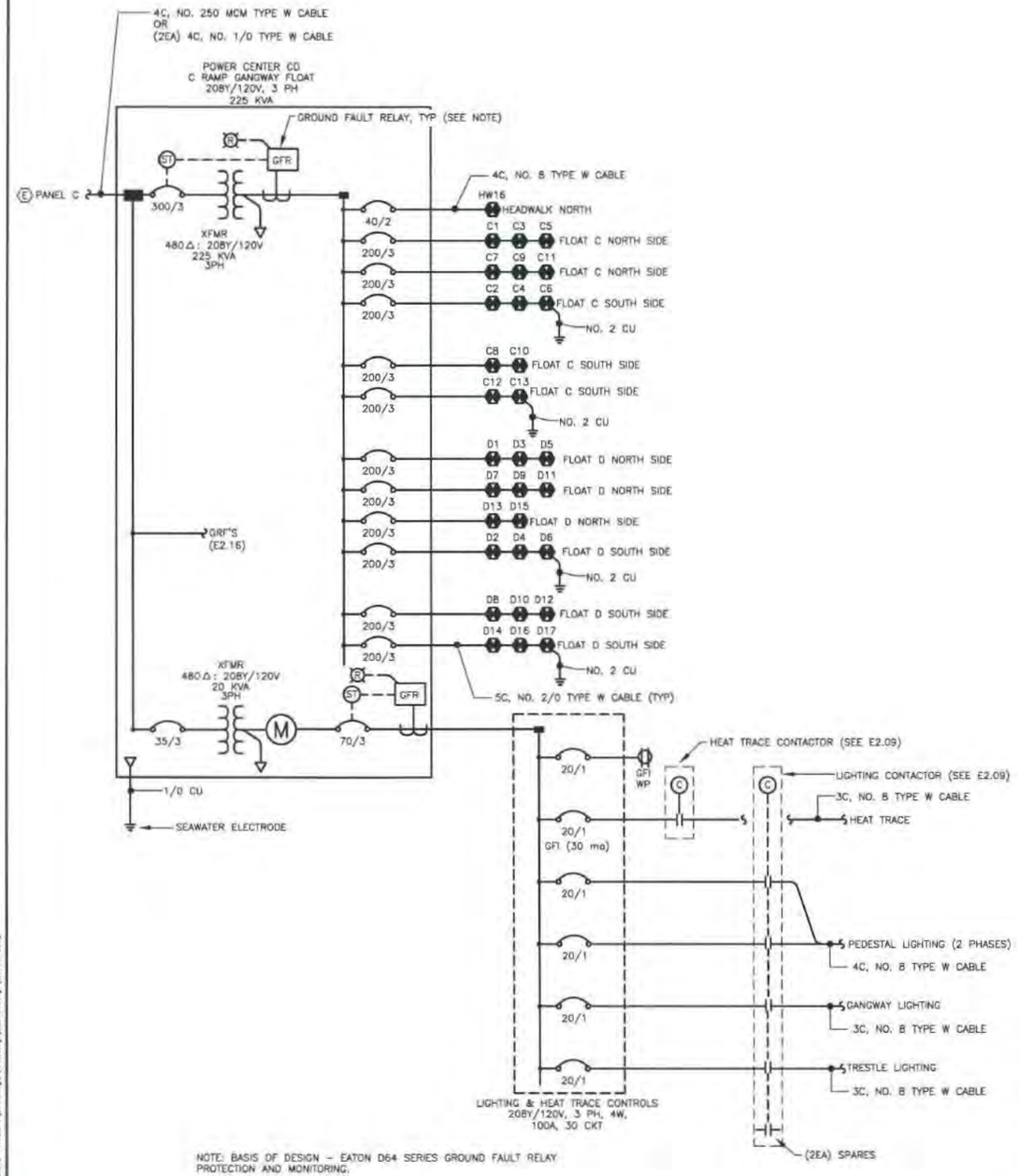

NOTE: BASIS OF DESIGN – EATON D64 SERIES GROUND FAULT RELAY PROTECTION AND MONITORING.

1 SINGLE LINE DIAGRAM - POWER CENTER CD

NO SCALE

FEEDER SCHEDULE	
CIRCUIT BREAKER	TYPE W CABLE
40/2	4C, NO. 8
60/3	5C, NO. 6
100/3	5C, NO. 4
150/3	5C, NO. 1
200/3	5C, NO. 2/0

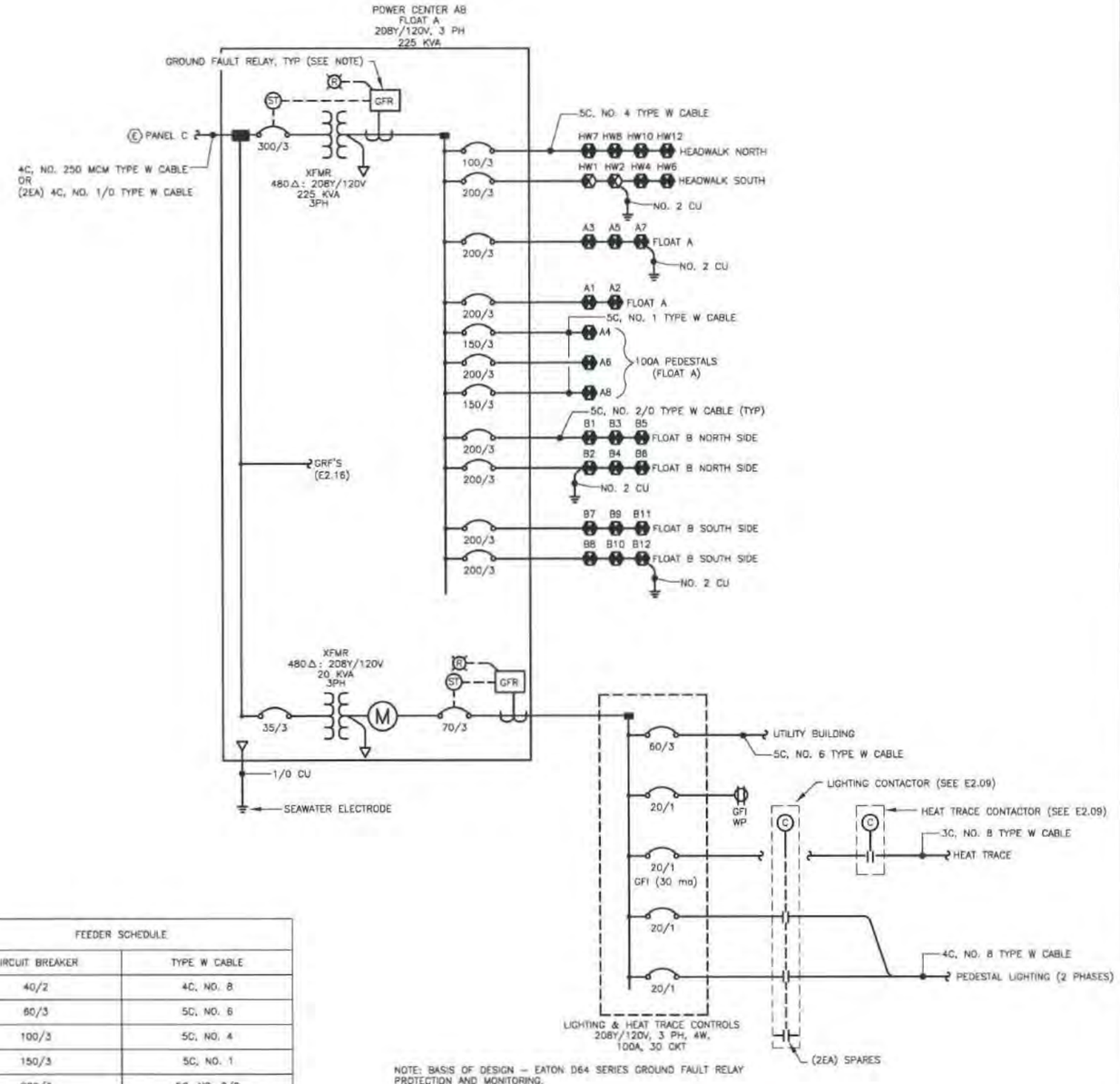

NOTE: BASIS OF DESIGN – EATON D64 SERIES GROUND FAULT RELAY PROTECTION AND MONITORING.

2 SINGLE LINE DIAGRAM - POWER CENTER AB

NO SCALE

Mar 13, 2014 - 8:15am
C:\Projects\137 PH&I\06 Aurora Harbor Rebuild Phase I\Drawings\Working\E2.07.dwg (E1.00 tab)

HAIGHT & ASSOCIATES
526 Main Street, Juneau, AK 99801
(907) 586-9788

REVISIONS

REV.	DATE	DESCRIPTION	DWN.	CKD.	APP.

PND ENGINEERS, INC.
9360 Glacier Highway, Ste. 100
Juneau, Alaska 99801
Phone: 907-586-2093
Fax: 907-586-2099
www.pndengineers.com

DESIGN: KHD/BCH CHECKED: BCH
DRAWN: KHD APPROVED: BCH
SCALE: AS SHOWN

STATE OF ALASKA
BRIAN C. HAIGHT
EE 4600
PROFESSIONAL ENGINEER
DATE: Mar 13, 2014

CITY & BOROUGH OF JUNEAU, ALASKA
AURORA HARBOR REBUILD - PHASE I
CONTRACT NO. DH 12-160

SHEET TITLE: NEW SINGLE LINE DIAGRAMS

PND PROJECT NO.: 122055 DWG. FILE:

E2.07
SHEET 17 OF 28

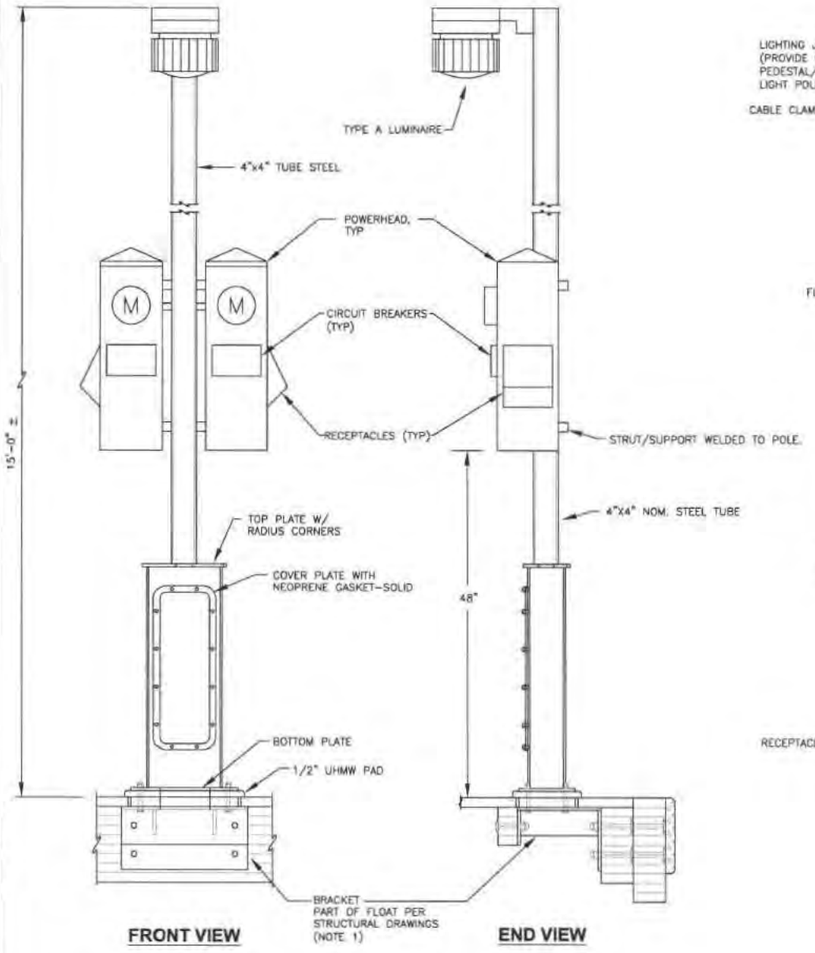

1 ELEVATION - PEDESTALS WITH LUMINAIRE
NO SCALE

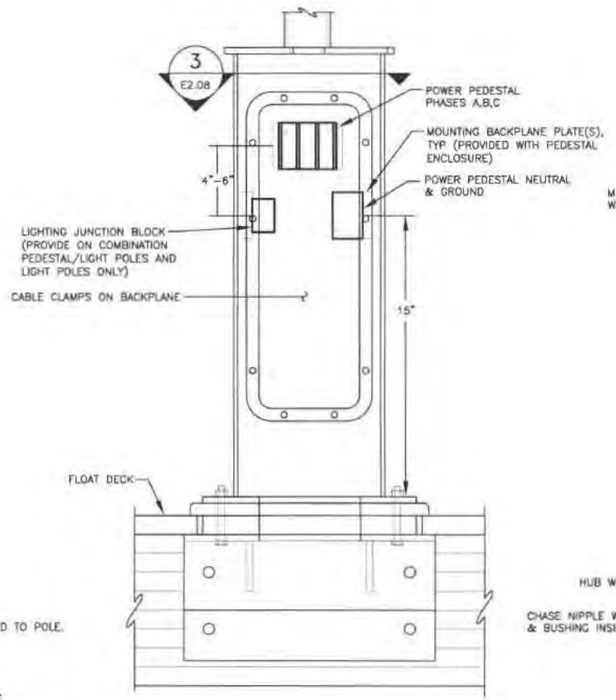

2 DETAIL - PEDESTAL BASE
NO SCALE

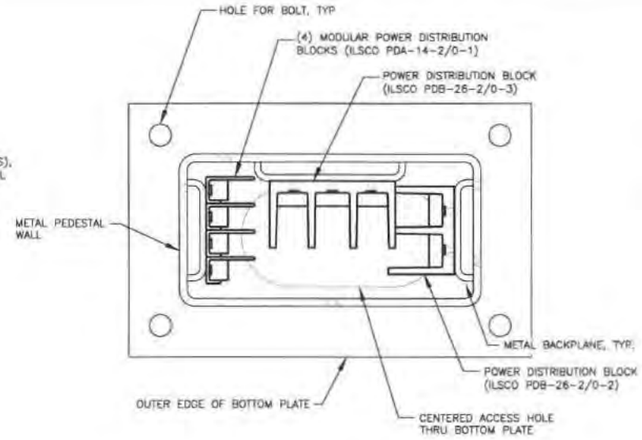

3 DETAIL - PEDESTAL BASE - TOP VIEW
NO SCALE

6 SHEET NOTES

1. SEE STRUCTURAL FOR PEDESTAL MOUNTING DETAIL.
2. MOUNT POWER DISTRIBUTION BLOCK TO BACKPLANES PROVIDED IN PEDESTAL. CHASE THREADS AS REQUIRED DURING FIELD INSTALLATION. WATERPROOF GREASE SHALL BE APPLIED TO ALL CHASED THREADS.
3. PROVIDE TAPPED HOLES AS REQUIRED TO MOUNT POWER DISTRIBUTION BLOCKS. COORDINATE WITH SUPPLIER TO MATCH HOLE PATTERN OF SUPPLIED BLOCKS.
4. ELEVATION FOR LIGHT ONLY POLES TO BE SIMILAR TO ELEVATION 1 EXCEPT WITH NO POWERHEADS OR STRUT/SUPPORTS.
5. ENTIRE ASSEMBLY TO BE PROVIDED BY ONE CONTRACTOR, INCLUDING BASE, POST/POLE, POWERHEAD, LUMINAIRE, AND CIRCUITS.

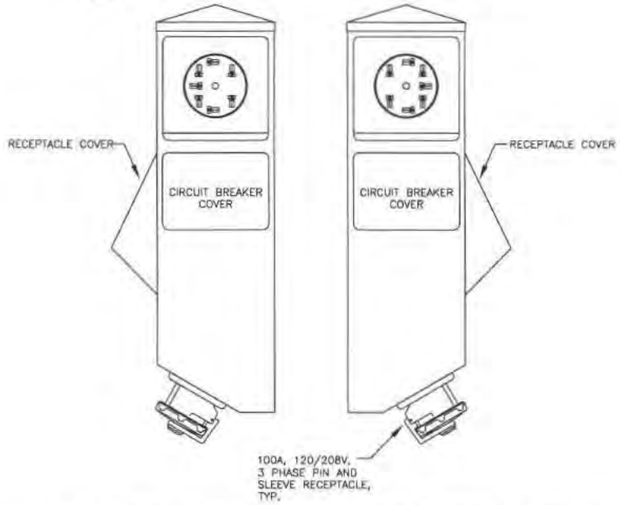

4 DETAIL - 30/50/100 POWERHEAD CONFIGURATION
NO SCALE

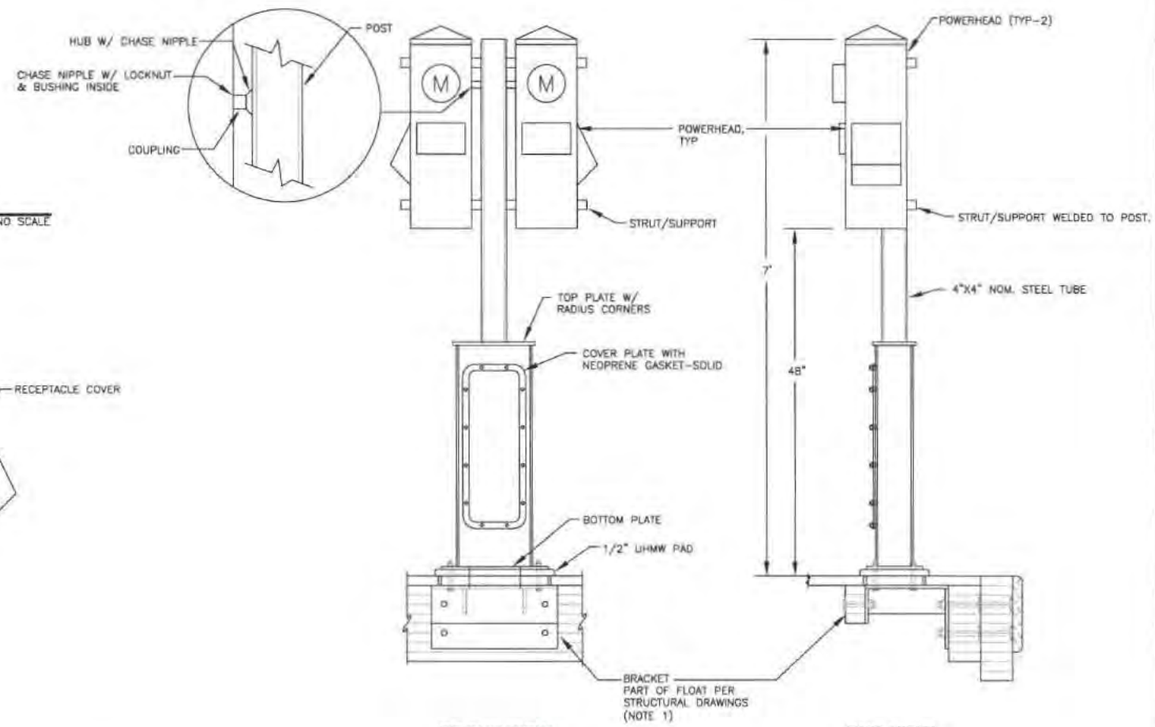

5 ELEVATION - PEDESTAL BASE AND POWERHEADS
NO SCALE

Mar 13, 2014 - 8:15am
F:\Projects\1357 PN&D\95 Aurora Harbor Rebuild Phase I\Drawings\Working\E2.08.dwg (E1.00 tab)

CITY & BOROUGH OF JUNEAU DOCKS & HARBORS

HAIGHT & ASSOCIATES
526 Main Street, Juneau, AK 99801
(907) 586-9788

REVISIONS

REV.	DATE	DESCRIPTION	DWN.	CKD.	APP.

P N D ENGINEERS, INC.
9360 Glacier Highway, Ste. 100
Juneau, Alaska 99801
Phone: 907-586-2093
Fax: 907-586-2099
www.pndengineers.com

DESIGN: KHD/BCH CHECKED: BCH
DRAWN: KHD APPROVED: BCH
SCALE: AS SHOWN
DATE: Mar 13, 2014

STATE OF ALASKA 49th BRIAN C. HAIGHT EE 4800 PROFESSIONAL ENGINEER

CITY & BOROUGH OF JUNEAU, ALASKA
AURORA HARBOR REBUILD - PHASE I
CONTRACT NO. DH 12-160

SHEET TITLE: ELECTRICAL DETAILS

PND PROJECT NO.: 122055 DWG. FILE:

E2.08
SHEET 18 OF 28

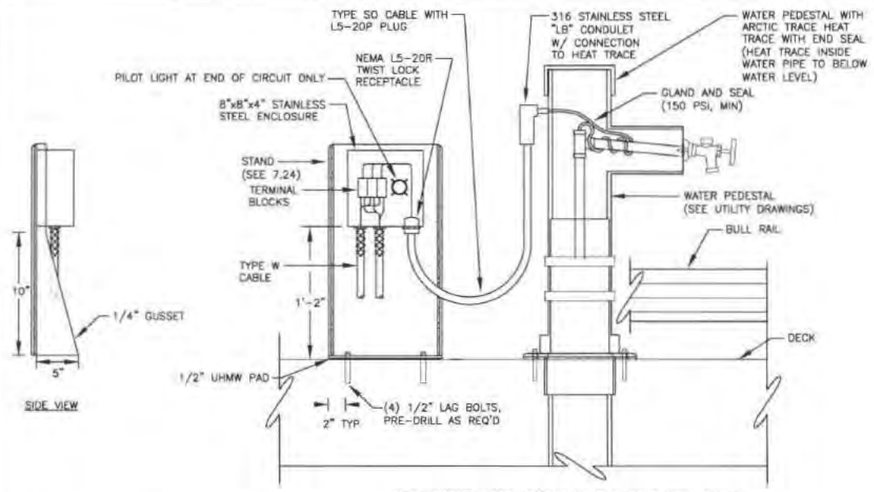

1 DETAIL - HEAT TRACE J-BOX STAND (TYP)

NO SCALE

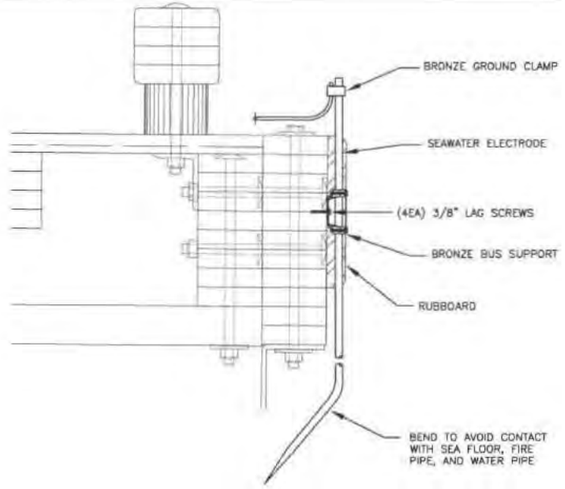

2 DETAIL- FLOAT MOUNTED SEAWATER ELECTRODE (TYP)

NO SCALE

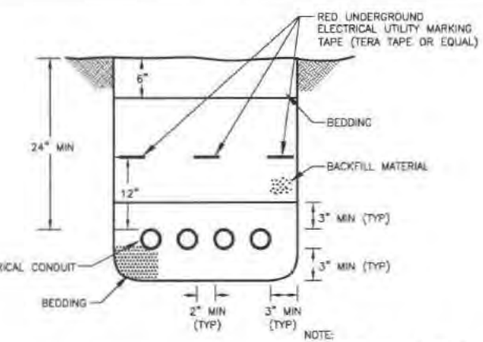

3 DETAIL- TRENCH (TYP)

NO SCALE

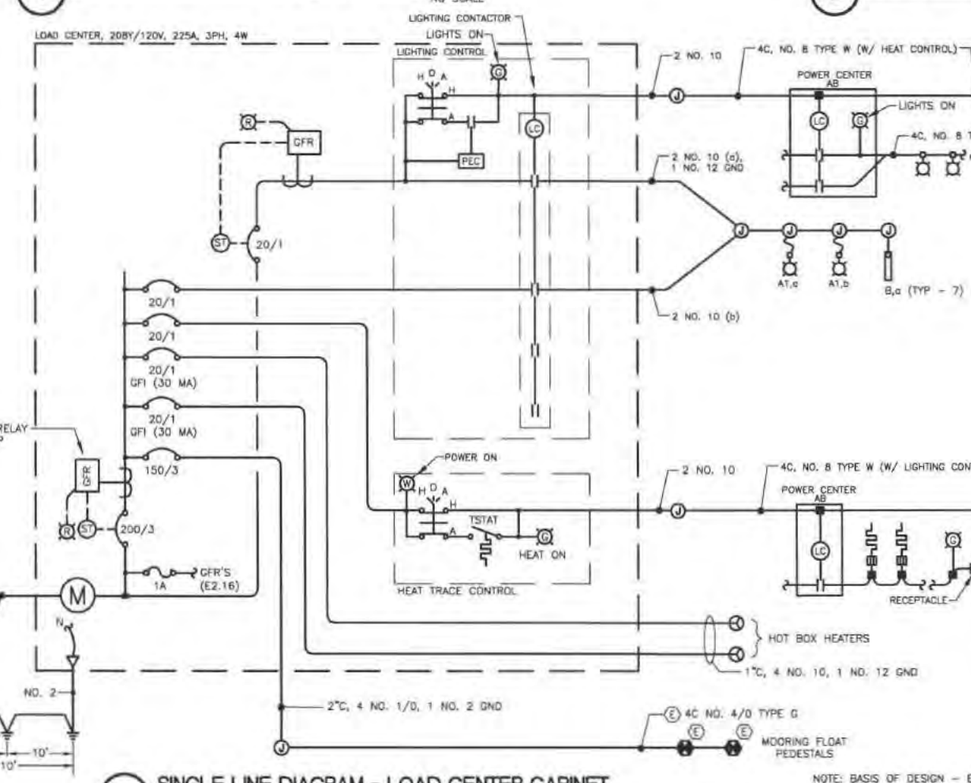

4 SINGLE LINE DIAGRAM - LOAD CENTER CABINET

NO SCALE

NOTE: BASIS OF DESIGN – EATON D64 SERIES GROUND FAULT RELAY PROTECTION AND MONITORING.

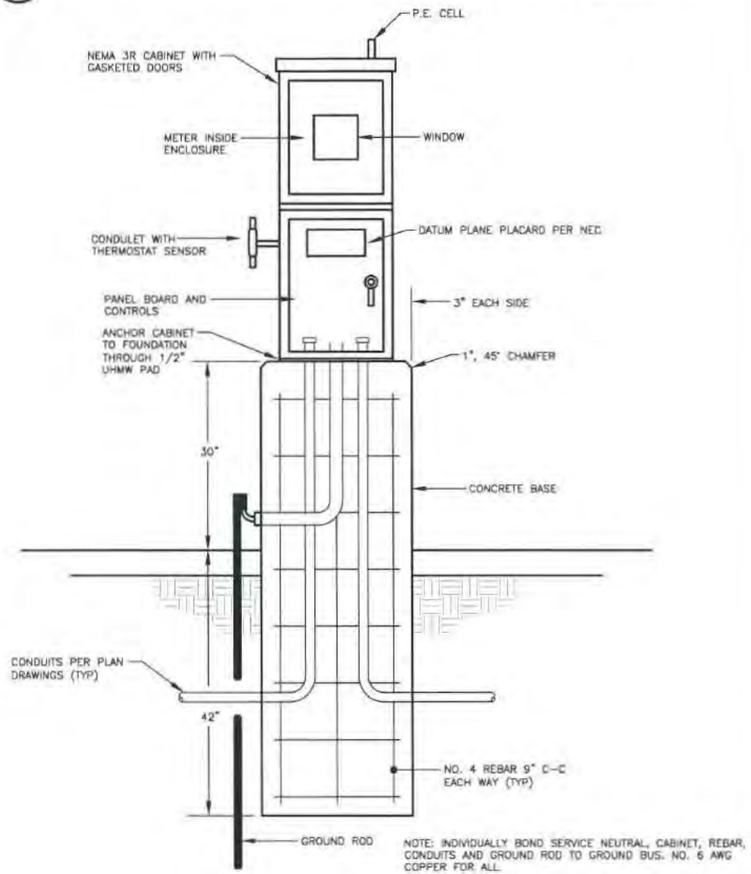

5 DETAIL - LOAD CENTER CABINET AND FOUNDATION

NO SCALE

Mar 13, 2014 - 8:15am
F:\Projects\131 PND\125 Aurora Harbor Rebuild Phase I\Drawings\Working\E2.09.dwg (21.00 lbs)

CITY & BOROUGH OF JUNEAU – DOCKS & HARBORS

HAIGHT & ASSOCIATES
526 Main Street, Juneau, AK 99801
(907) 586-9788

REVISIONS

REV.	DATE	DESCRIPTION	DWN.	CKD.	APP.

PND ENGINEERS, INC.
9360 Glacier Highway, Ste. 100
Juneau, Alaska 99801
Phone: 907-586-2093
Fax: 907-586-2099
www.pndengineers.com

DESIGN: KHD/BCH CHECKED: BCH
DRAWN: KHD APPROVED: BCH
SCALE: AS SHOWN

STATE OF ALASKA – 49th – BRIAN C. HAIGHT – EE 4800 – REGISTERED PROFESSIONAL ENGINEER
DATE: Mar 13, 2014

CITY & BOROUGH OF JUNEAU, ALASKA
AURORA HARBOR REBUILD - PHASE I
CONTRACT NO. DH 12-160

SHEET TITLE: ELECTRICAL DETAILS
PND PROJECT NO.: 122055 DWG. FILE:

E2.09
SHEET 19 OF 28

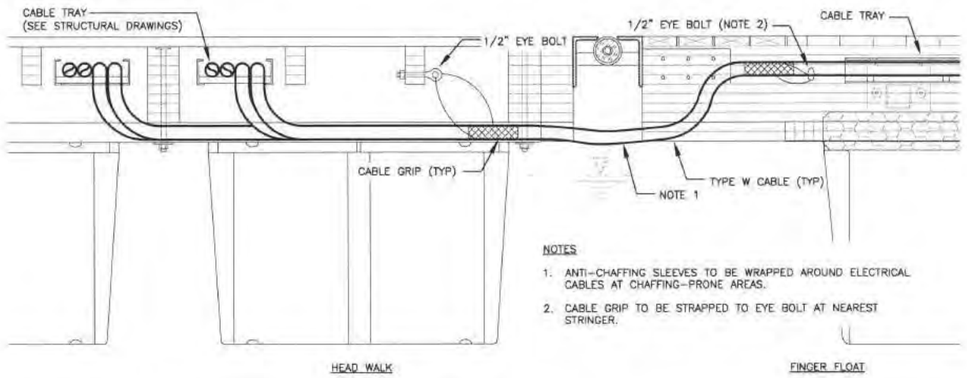

1 DETAIL - FLOAT TO FLOAT CABLE TRANSITION

NO SCALE

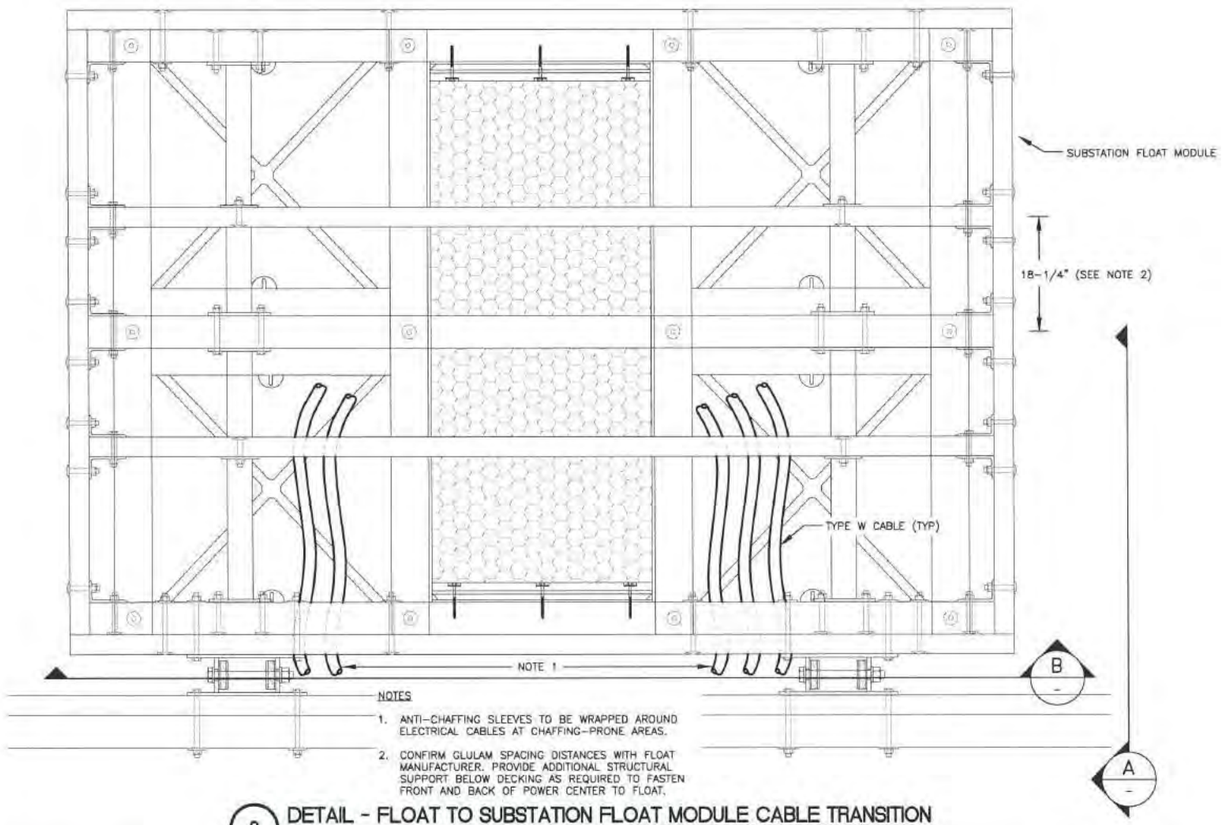

3 DETAIL - FLOAT TO SUBSTATION FLOAT MODULE CABLE TRANSITION

NO SCALE

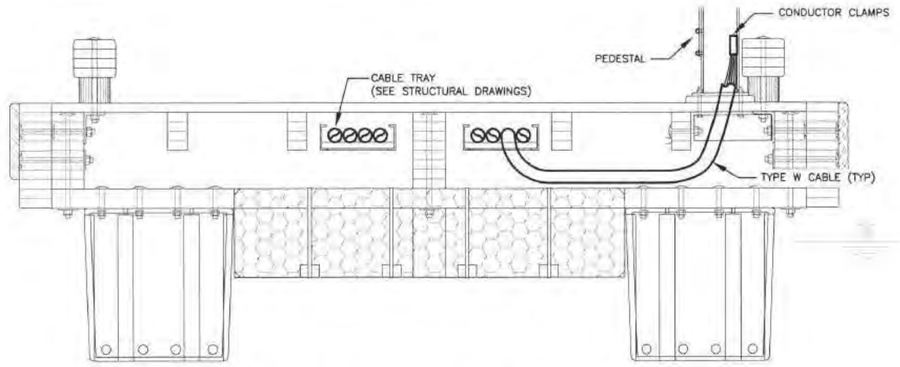

2 DETAIL - FLOAT TO PEDESTAL CABLE TRANSITION

NO SCALE

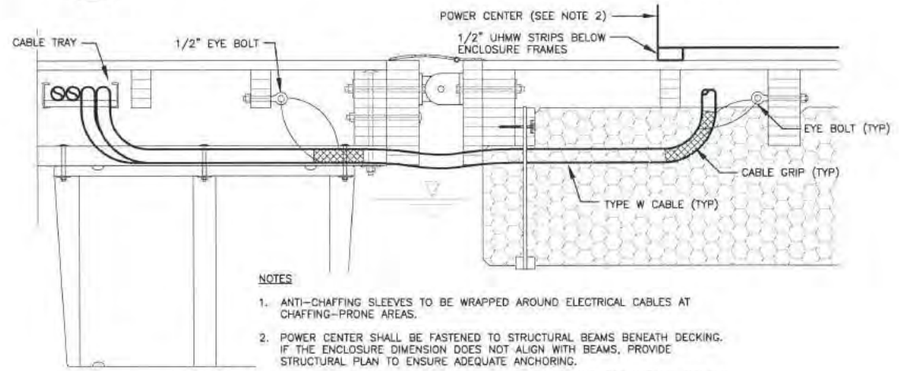

4 SECTION A

NO SCALE

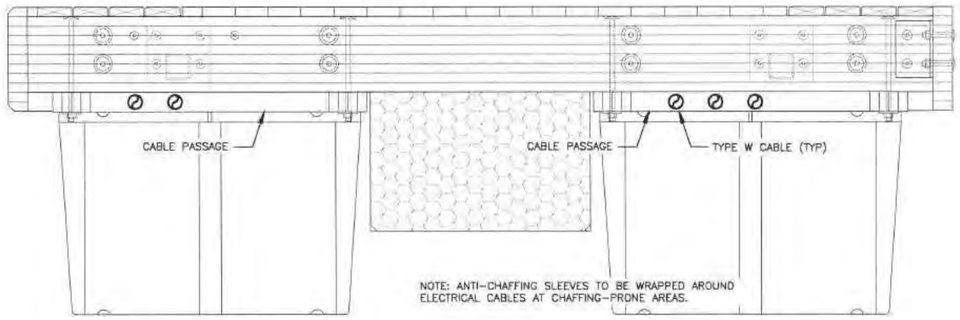

5 SECTION B

NO SCALE

Mar 13, 2014 - 8:15am
F:\Projects\137 PND\95 Aurora Harbor Rebuild Phase I\Drawings\Working\E2.10.dwg (E1.00 tab)

CITY & BOROUGH OF JUNEAU DOCKS & HARBORS

HAIGHT & ASSOCIATES
526 Main Street, Juneau, AK 99801
(907) 586-9788

REVISIONS

REV.	DATE	DESCRIPTION	DWN.	CKD.	APP.

P N D ENGINEERS, INC.
9360 Glacier Highway, Ste. 100
Juneau, Alaska 99801
Phone: 907-586-2093
Fax: 907-586-2099
www.pndengineers.com

DESIGN: KHD/BCH CHECKED: BCH
DRAWN: KHD APPROVED: BCH
SCALE: AS SHOWN

STATE OF ALASKA 49th B.C. HAIGHT EE 4800 REGISTERED PROFESSIONAL ENGINEER
DATE: Mar 13, 2014

CITY & BOROUGH OF JUNEAU, ALASKA
AURORA HARBOR REBUILD - PHASE I
CONTRACT NO. DH 12-160

SHEET TITLE: FLOAT DETAILS
PND PROJECT NO.: 122055 DWG. FILE:
E2.10
SHEET 20 OF 28

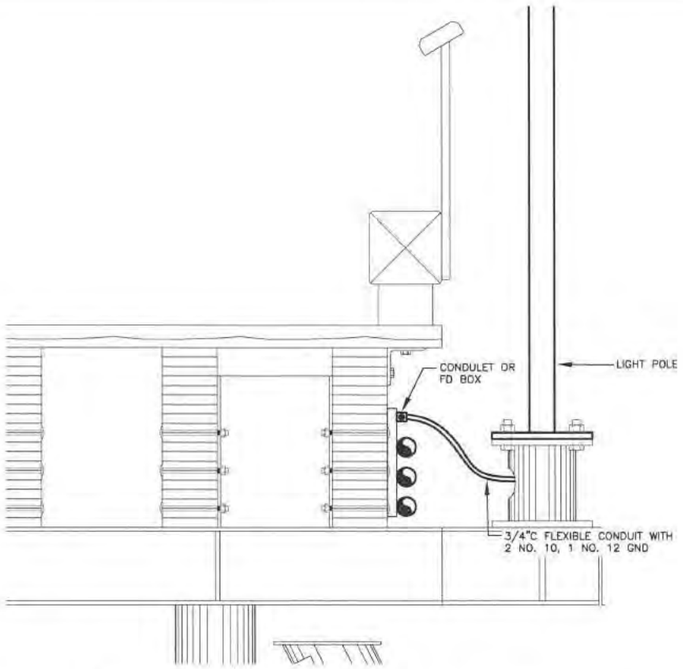

1 DETAIL - FLOAT C APPROACH DOCK LIGHTING
NO SCALE

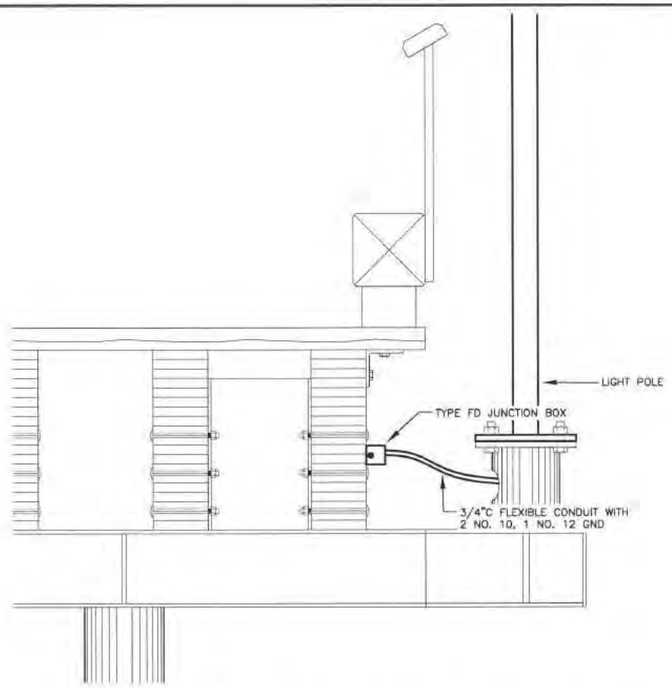

2 DETAIL - SOUTH APPROACH DOCK LIGHTING
NO SCALE

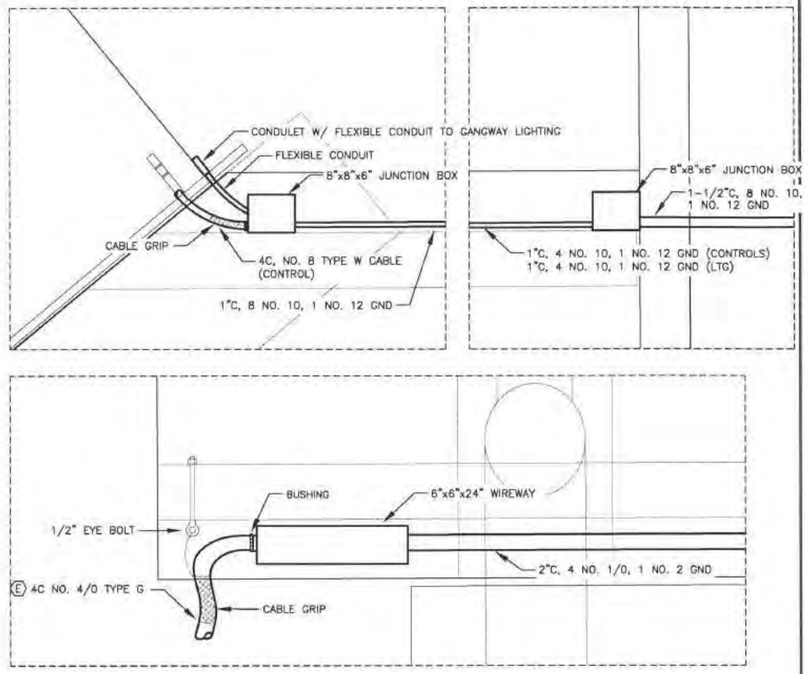

3 DETAILS - SOUTH APPROACH DOCK WIREWAYS
NO SCALE

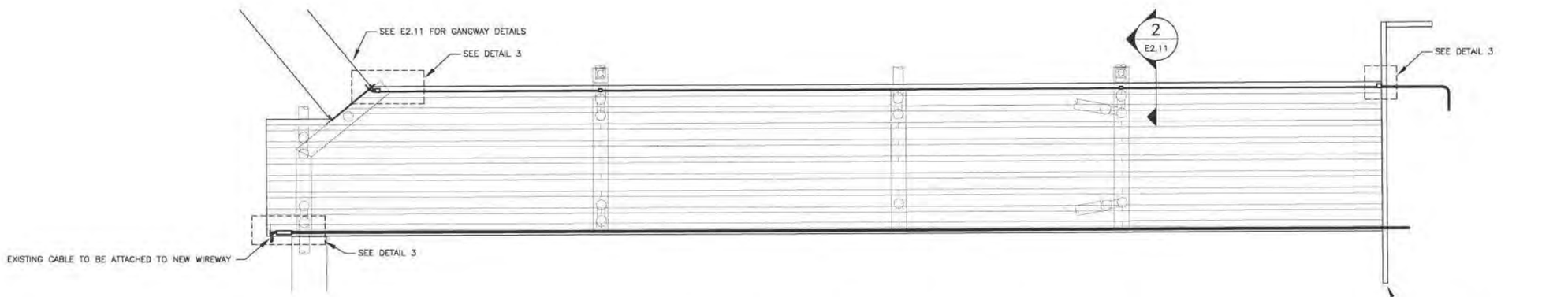

4 DETAIL - SOUTH APPROACH DOCK POWER
NO SCALE

Mar 13, 2014 – 8:16am
F:\Projects\37 PND\95 Aurora Harbor Rebuild Phase I\Drawings\Working\E2.11.dwg (E1:00 tab)

CITY & BOROUGH OF JUNEAU DOCKS & HARBORS

HAIGHT & ASSOCIATES
526 Main Street, Juneau, AK 99801
(907) 586-9788

REVISIONS

REV.	DATE	DESCRIPTION	DWN.	CKD.	APP.

P N D ENGINEERS, INC.
9360 Glacier Highway, Ste. 100
Juneau, Alaska 99801
Phone: 907-586-2093
Fax: 907-586-2099
www.pndengineers.com

DESIGN: KHD/BCH CHECKED: BCH
DRAWN: KHD APPROVED: BCH
SCALE: AS SHOWN
DATE: Mar 13, 2014

STATE OF ALASKA — B.C. HAIGHT — EE 4600 — REGISTERED PROFESSIONAL ENGINEER

CITY & BOROUGH OF JUNEAU, ALASKA
AURORA HARBOR REBUILD - PHASE I
CONTRACT NO. DH 12-160

SHEET TITLE: APPROACH DOCK DETAILS
PND PROJECT NO.: 122055 DWG. FILE:

E2.11
SHEET 21 OF 28

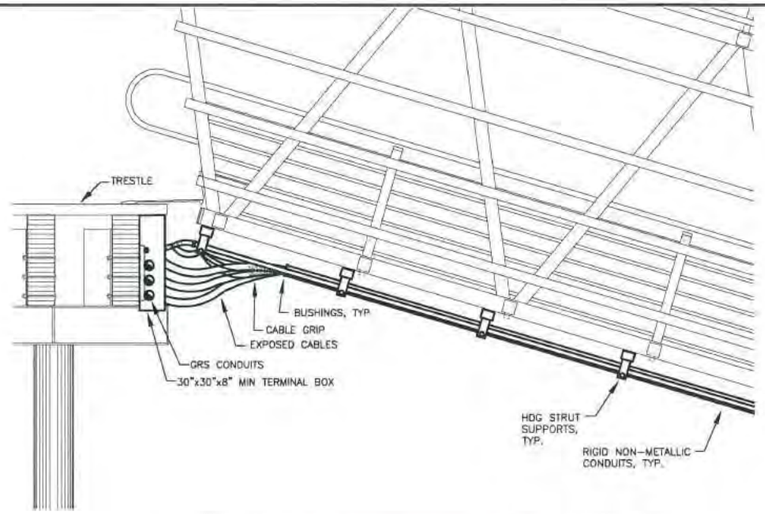

1 DETAIL - FLOAT C GANGWAY AND TRESTLE POWER
NO SCALE

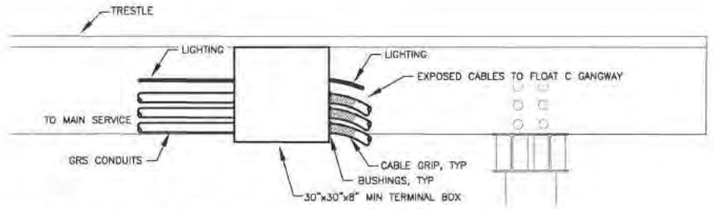

2 DETAIL - FLOAT C TRESTLE TERMINAL BOX
NO SCALE

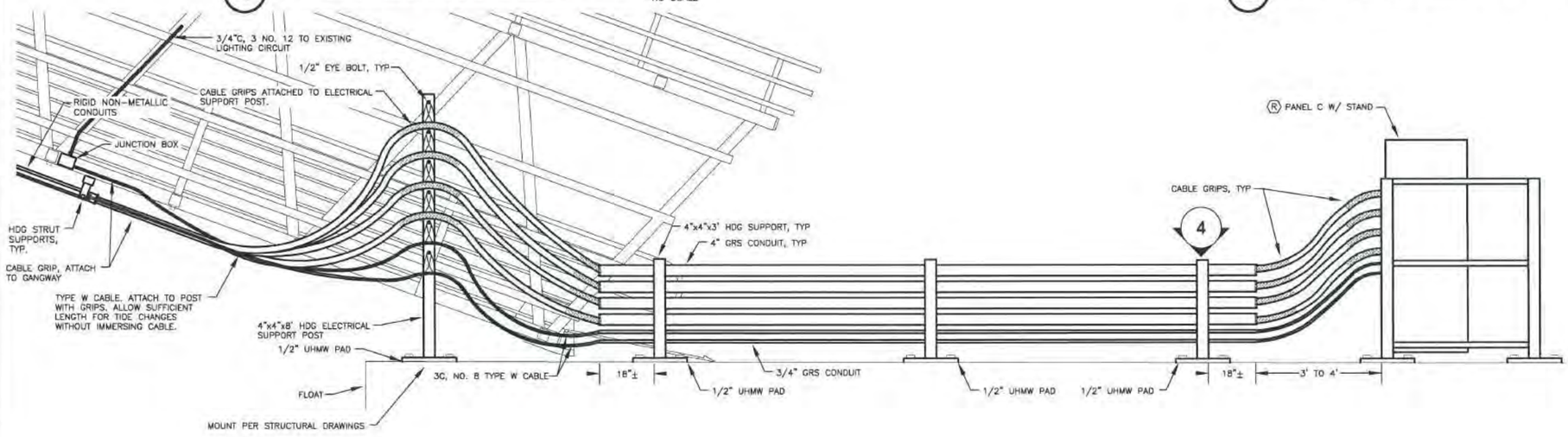

3 DETAIL - FLOAT C GANGWAY CABLE RACK
NO SCALE

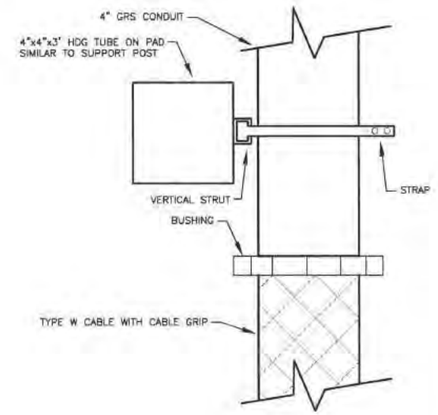

4 DETAIL - CABLE RACK CONDUIT ATTACHMENT
NO SCALE

Mar 13, 2014 - 8:16am
F:\Projects\137 PND\05 Aurora Harbor Rebuild Phase I\Drawings\Working\E2.12.dwg (E1.00 tab)

CITY & BOROUGH OF JUNEAU DOCKS & HARBORS

HAIGHT & ASSOCIATES
526 Main Street, Juneau, AK 99801
(907) 586-9788

REVISIONS

REV.	DATE	DESCRIPTION	DWN.	CKD.	APP.

P N D ENGINEERS, INC.
9360 Glacier Highway, Ste. 100
Juneau, Alaska 99801
Phone: 907-586-2093
Fax: 907-586-2099
www.pndengineers.com

DESIGN: KHD/BCH CHECKED: BCH
DRAWN: KHD APPROVED: BCH
SCALE: AS SHOWN

STATE OF ALASKA 1981 B.C. HAIGHT EE 14900 REGISTERED PROFESSIONAL ENGINEER
DATE: Mar 13, 2014

CITY & BOROUGH OF JUNEAU, ALASKA
AURORA HARBOR REBUILD - PHASE I
CONTRACT NO. DH 12-160

SHEET TITLE: **FLOAT C GANGWAY DETAILS**

PND PROJECT NO.: 122055 DWG. FILE:

E2.12
SHEET 22 OF 28

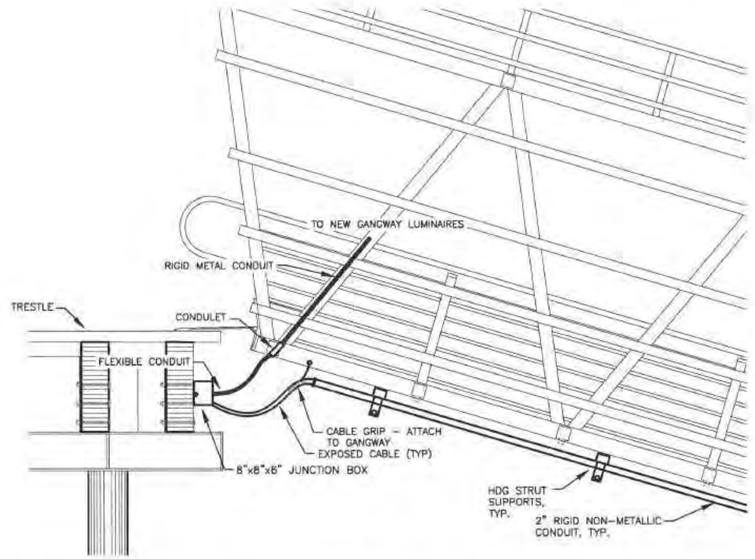

1 DETAIL - SOUTH APPROACH GANGWAY AND TRESTLE POWER
NO SCALE

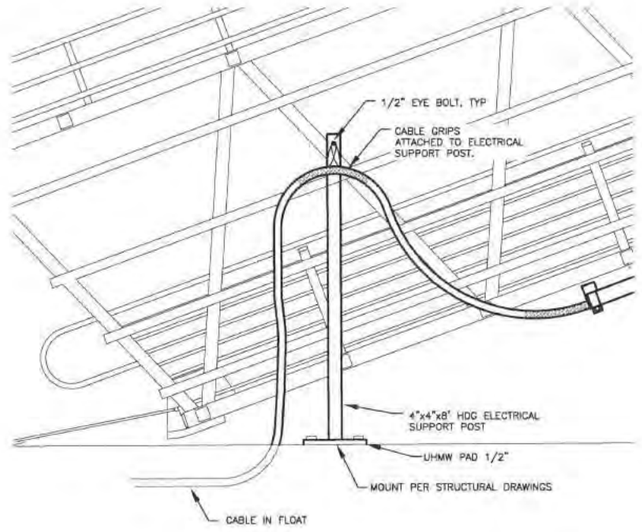

2 DETAIL - SOUTH APPROACH GANGWAY CABLE SUPPORT POST
NO SCALE

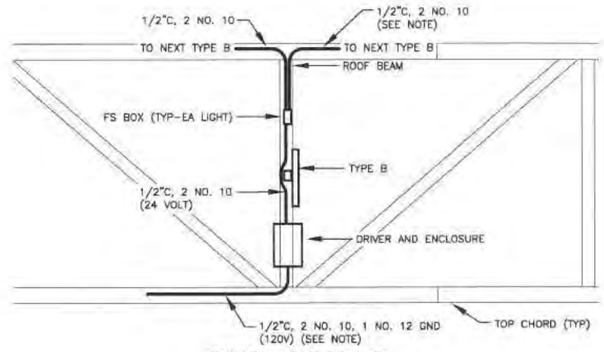

NOTE: FASTEN CONDUIT TO STRUCTURE USING SINGLE HOLE STRAPS AND SADDLES. ISOLATE DISSIMILAR METALS.

3 DETAIL - SOUTH APPROACH GANGWAY LUMINAIRE INSTALLATION
NO SCALE

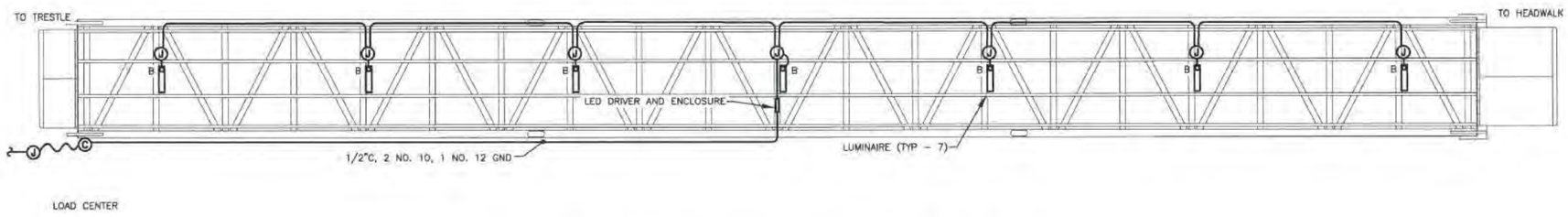

4 SOUTH APPROACH GANGWAY LIGHTING - PLAN VIEW
NO SCALE

Mar 13, 2014 - 8:16am
F:\Projects\137 PN&D\05 Aurora Harbor Rebuild Phase I\Drawings\Working\E2.13.dwg (E1.00 tab)

CITY & BOROUGH OF JUNEAU - DOCKS & HARBORS

HAIGHT & ASSOCIATES
526 Main Street, Juneau, AK 99801
(907) 586-9788

REVISIONS

REV.	DATE	DESCRIPTION	DWN.	CKD.	APP.

P N D ENGINEERS, INC.
9360 Glacier Highway, Ste. 100
Juneau, Alaska 99801
Phone: 907-586-2093
Fax: 907-586-2099
www.pndengineers.com

DESIGN: KHD/BCH CHECKED: BCH
DRAWN: KHD APPROVED: BCH
SCALE: AS SHOWN

STATE OF ALASKA - B.C. HAIGHT - EE 4800 - REGISTERED PROFESSIONAL ENGINEER
DATE: Mar 13, 2014

CITY & BOROUGH OF JUNEAU, ALASKA
AURORA HARBOR REBUILD - PHASE I
CONTRACT NO. DH 12-160

SHEET TITLE: SOUTH APPROACH GANGWAY DETAILS

PND PROJECT NO.: 122055 DWG. FILE:

E2.13 SHEET 23 OF 28

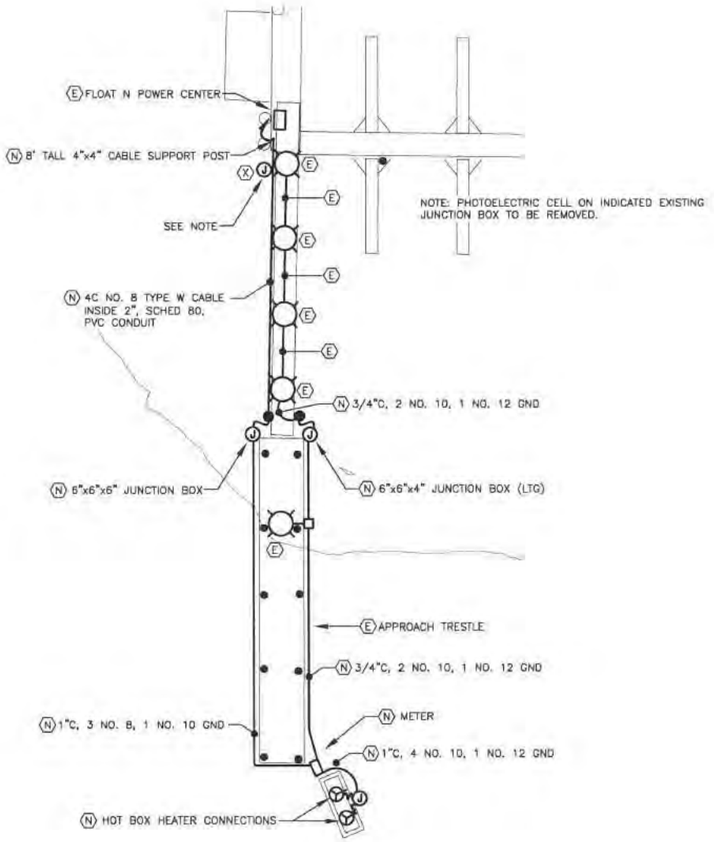

1 SITE PLAN - NORTH GANGWAY

SCALE IN FEET
0 20 40 FT.

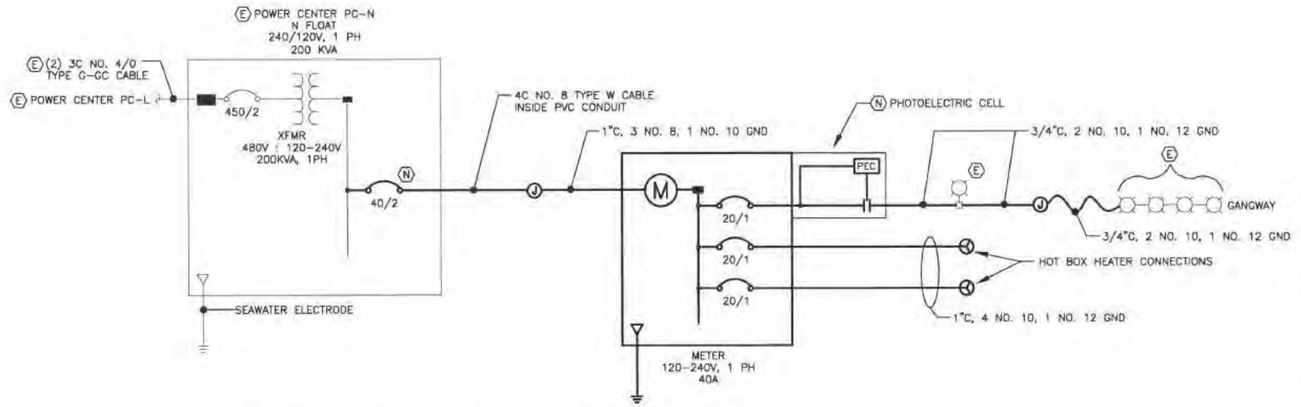

2 SINGLE LINE DIAGRAM - NORTH GANGWAY METER

NO SCALE

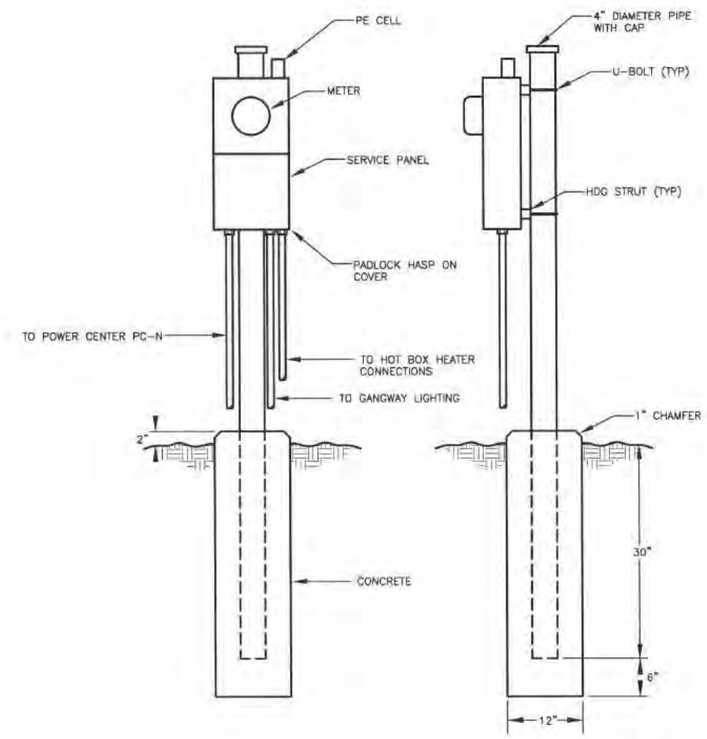

3 DETAIL - NORTH GANGWAY METER STAND

NO SCALE

Mar 13, 2014 - 8:16am
F:\Projects\137 PND\05 Aurora Harbor Rebuild Phase I\Drawings\Working\E2.14.dwg (E1.00 tab)

CITY & BOROUGH OF JUNEAU DOCKS & HARBORS

HAIGHT & ASSOCIATES
526 Main Street, Juneau, AK 99801
(907) 586-9788

REVISIONS

REV.	DATE	DESCRIPTION	DWN.	CKD.	APP.

P N D ENGINEERS, INC.
9360 Glacier Highway, Ste. 100
Juneau, Alaska 99801
Phone: 907-586-2093
Fax: 907-586-2099
www.pndengineers.com

DESIGN: KHD/BCH CHECKED: BCH
DRAWN: KHD APPROVED: BCH
SCALE: AS SHOWN

STATE OF ALASKA B.C. HAIGH EE 14800 REGISTERED PROFESSIONAL ENGINEER
DATE: Mar 13, 2014

CITY & BOROUGH OF JUNEAU, ALASKA
AURORA HARBOR REBUILD - PHASE I
CONTRACT NO. DH 12-160

SHEET TITLE: NORTH GANGWAY DETAILS

PND PROJECT NO.: 122055 DWG. FILE:

E2.14
SHEET 24 OF 28

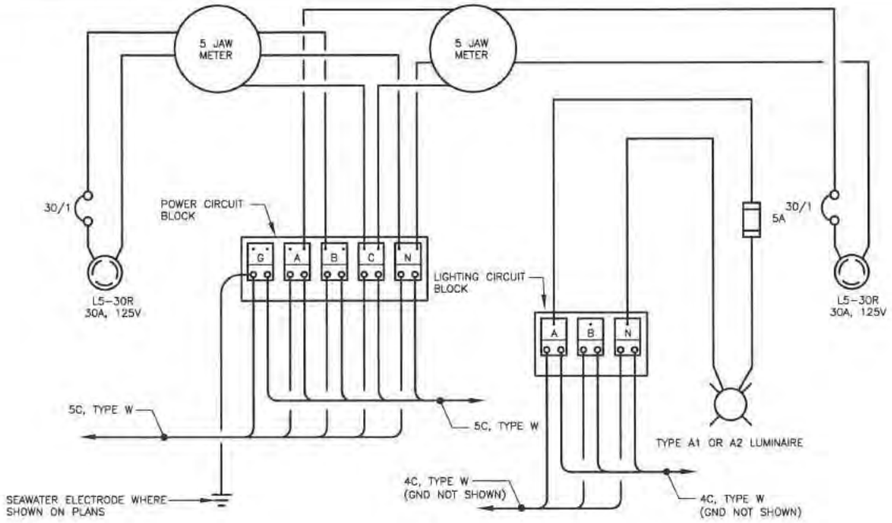

1 WIRING DIAGRAM - TYPICAL 30A/30A PEDESTAL WITH LUMINAIRE
NO SCALE

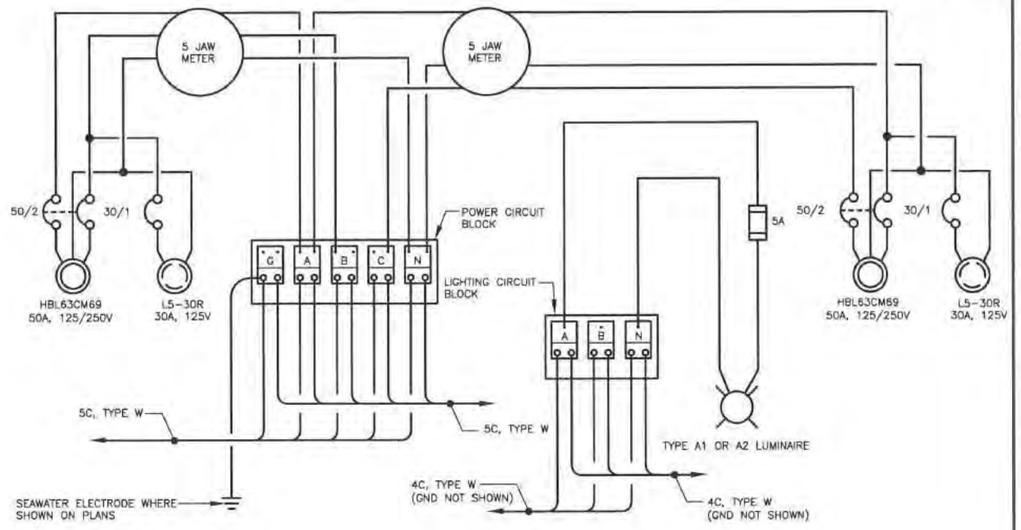

2 WIRING DIAGRAM - TYPICAL 50A/50A PEDESTAL WITH LUMINAIRE
NO SCALE

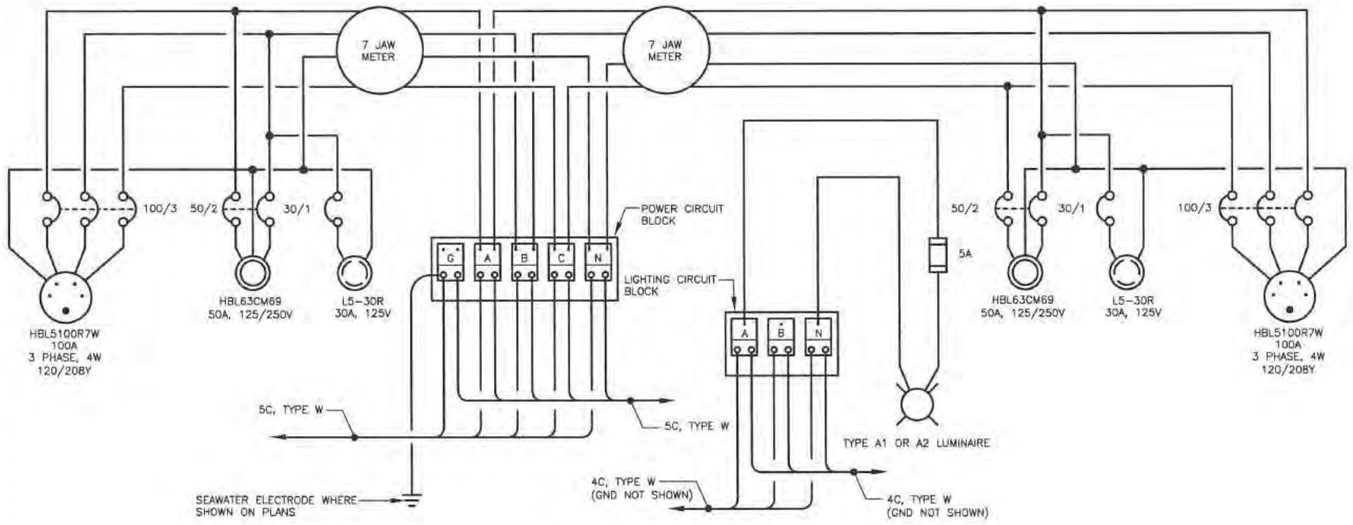

3 WIRING DIAGRAM - TYPICAL 100A/100A PEDESTAL WITH LUMINAIRE
NO SCALE

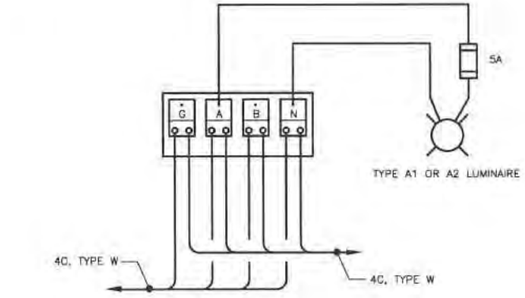

4 WIRING DIAGRAM - TYPICAL POLE MOUNTED LUMINAIRE
NO SCALE

5 SHEET NOTES

1. POWER CIRCUIT CONNECTIONS PER SCHEDULES ON PLANS (E2.01–E2.05)
2. ALTERNATE LIGHTING CONNECTIONS PER PLANS (E3.01 & E3.02)

CITY & BOROUGH OF JUNEAU DOCKS & HARBORS

HAIGHT & ASSOCIATES
526 Main Street, Juneau, AK 99801
(907) 586-9788

PND ENGINEERS, INC.
9360 Glacier Highway, Ste. 100
Juneau, Alaska 99801
Phone: 907-586-2093
Fax: 907-586-2099
www.pndengineers.com

REVISIONS

REV.	DATE	DESCRIPTION	DWN.	CKD.	APP.

DESIGN: KHD/BCH CHECKED: BCH
DRAWN: KHD APPROVED: BCH
SCALE: AS SHOWN

STATE OF ALASKA 49th B.C. HAUGHT EE 4800 PROFESSIONAL ENGINEER
DATE: Mar 13, 2014

CITY & BOROUGH OF JUNEAU, ALASKA
AURORA HARBOR REBUILD - PHASE I
CONTRACT NO. DH 12-160

SHEET TITLE: WIRING DIAGRAMS
PND PROJECT NO.: 122055
DWG. FILE:

E2.15
SHEET 25 OF 28

Mar 13, 2014 - 8:17am
F:\Projects\137 PND\95 Aurora Harbor Rebuild Phase I\Drawings\Working\E2.15.dwg (E1.00 tab)

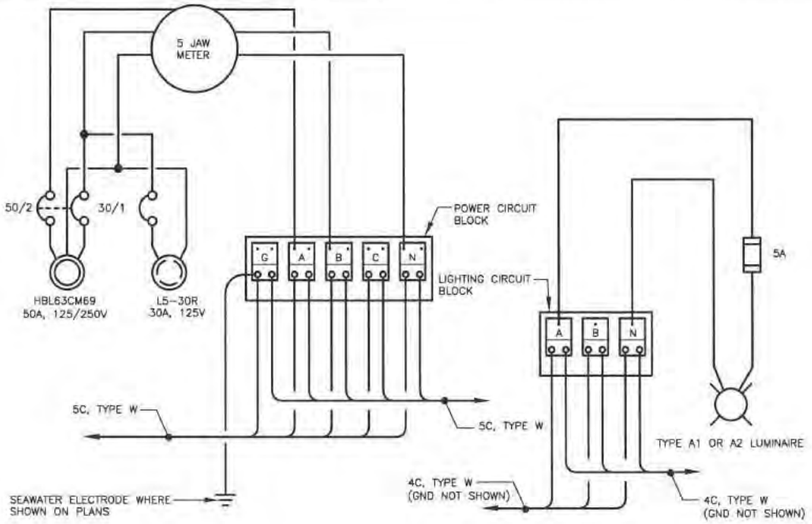

1 WIRING DIAGRAM - TYPICAL SINGLE SIDE PEDESTAL WITH LUMINAIRE

NO SCALE

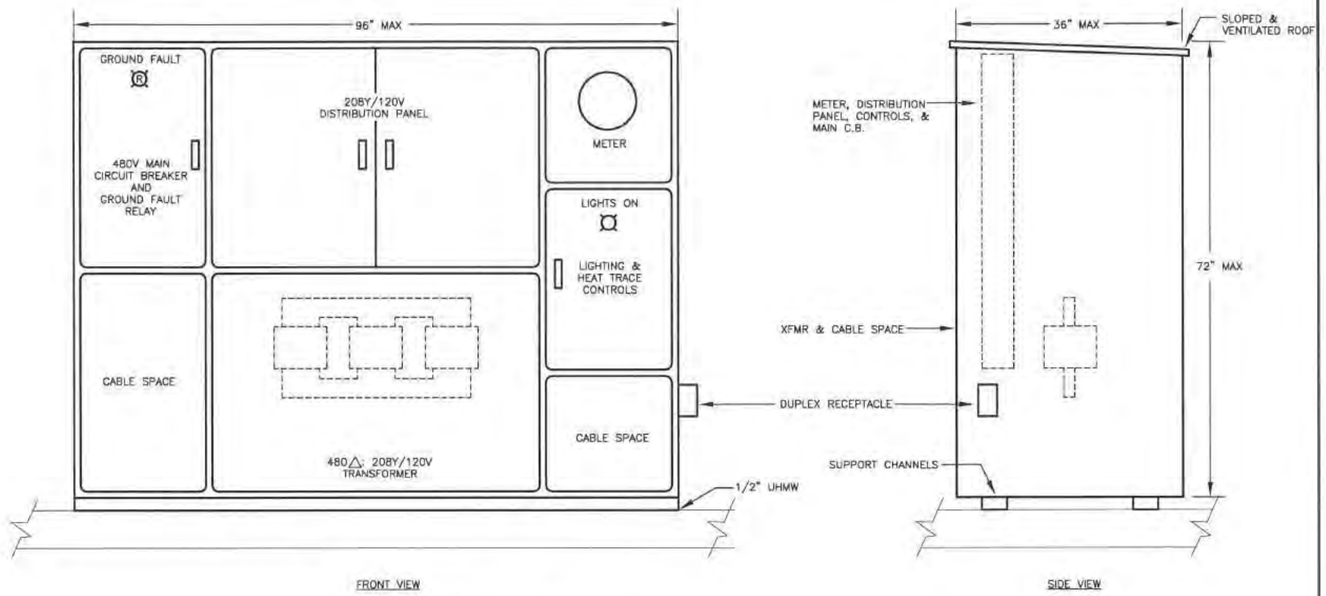

2 ELEVATION - POWER CENTER

NO SCALE

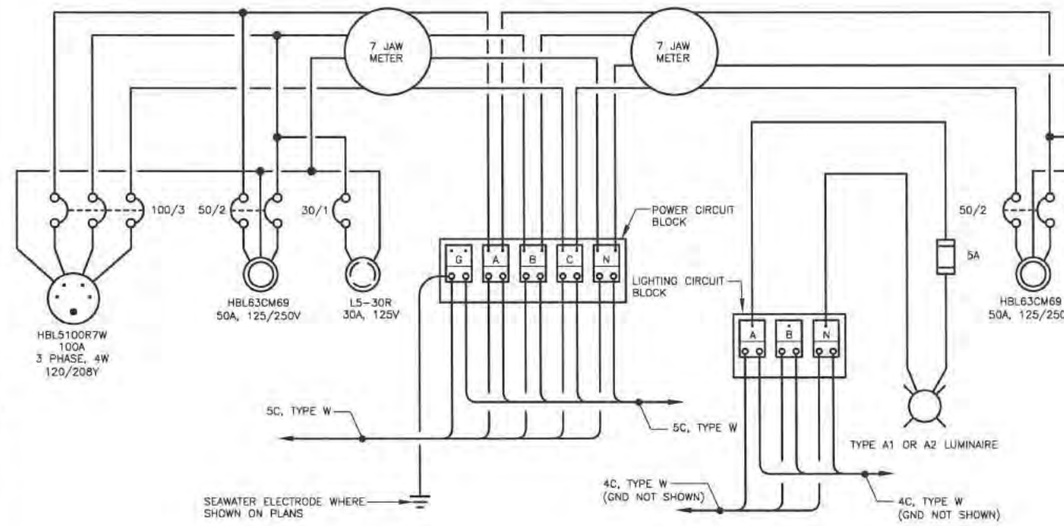

3 WIRING DIAGRAM - TYPICAL 100A/50A PEDESTAL WITH LUMINAIRE

NO SCALE

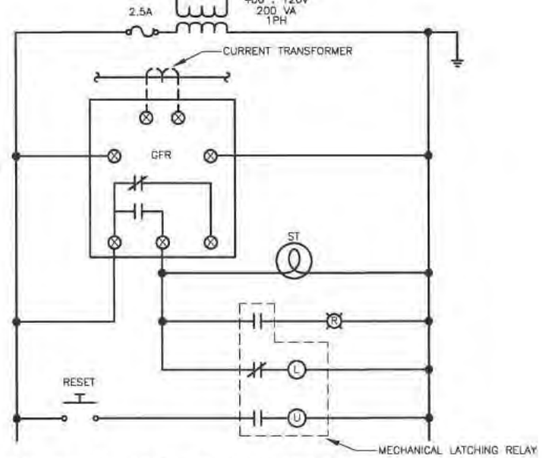

4 LADDER DIAGRAM - GROUND FAULT RELAY

NO SCALE

5 SHEET NOTES

1. POWER CIRCUIT CONNECTIONS PER SCHEDULES ON PLANS (E2.01–E2.05)
2. ALTERNATE LIGHTING CONNECTIONS PER PLANS (E3.01 & E3.02)

Mar 13, 2014 - 8:17am
I:\Projects\137 PND\095 Aurora Harbor Rebuild Phase I\Drawings\Working\E2.16.dwg (E1.00 tab)

CITY & BOROUGH OF JUNEAU DOCKS & HARBORS

HAIGHT & ASSOCIATES
526 Main Street, Juneau, AK 99801
(907) 586-9788

REVISIONS

REV.	DATE	DESCRIPTION	DWN.	CKD.	APP.

PND ENGINEERS, INC.
9360 Glacier Highway, Ste. 100
Juneau, Alaska 99801
Phone: 907-586-2093
Fax: 907-586-2099
www.pndengineers.com

DESIGN: KHD/BCH CHECKED: BCH
DRAWN: KHD APPROVED: BCH
SCALE: AS SHOWN
DATE: Mar 13, 2014

STATE OF ALASKA 49TH B.C. HAIGHT EE 4800 REGISTERED PROFESSIONAL ENGINEER

CITY & BOROUGH OF JUNEAU, ALASKA
AURORA HARBOR REBUILD - PHASE I
CONTRACT NO. DH 12-160

SHEET TITLE: DIAGRAMS & ELEVATION

PND PROJECT NO.: 122055 DWG. FILE:

E2.16
SHEET 26 OF 28

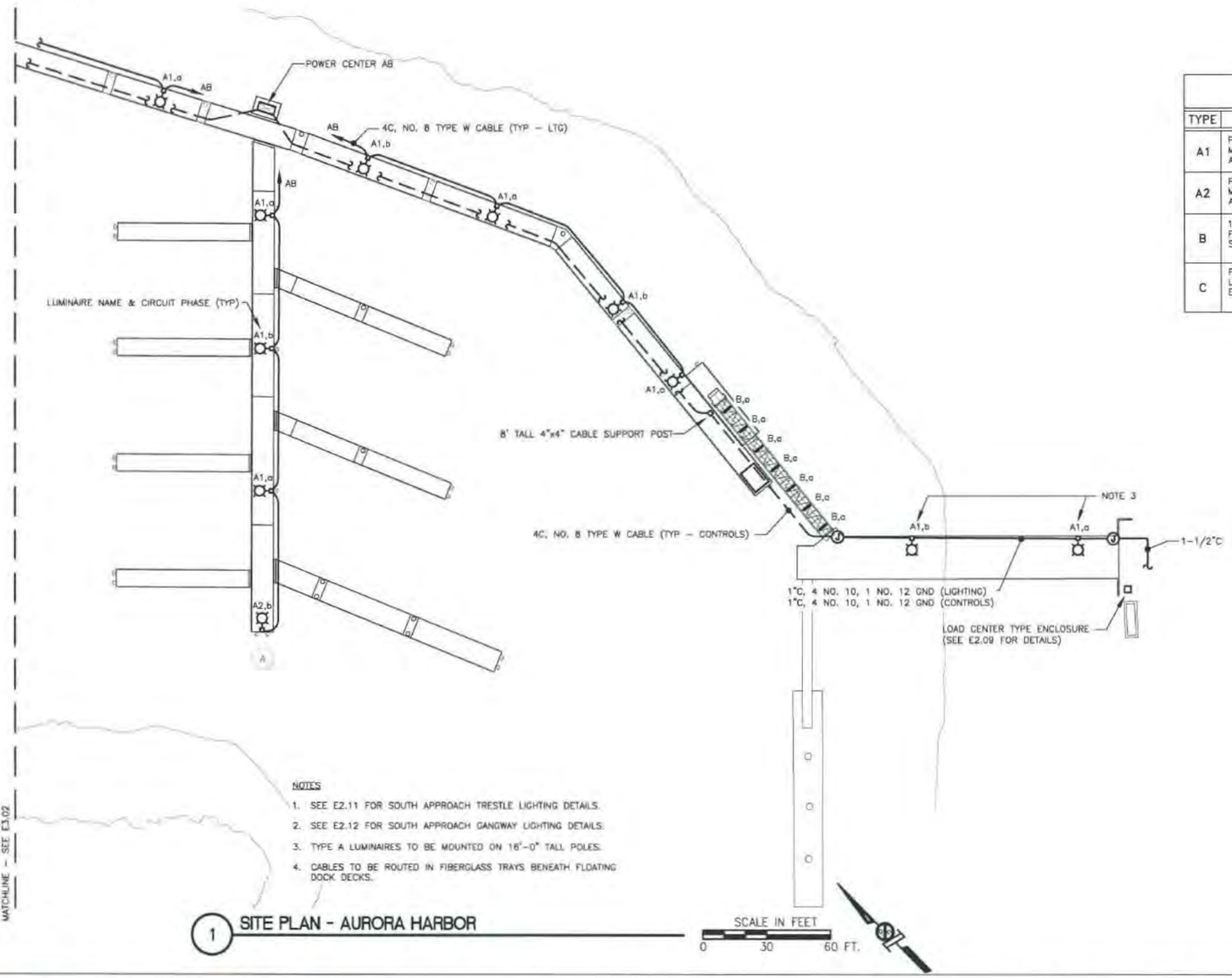

NOTES

1. SEE E2.11 FOR SOUTH APPROACH TRESTLE LIGHTING DETAILS.
2. SEE E2.12 FOR SOUTH APPROACH GANGWAY LIGHTING DETAILS.
3. TYPE A LUMINAIRES TO BE MOUNTED ON 16'-0" TALL POLES.
4. CABLES TO BE ROUTED IN FIBERGLASS TRAYS BENEATH FLOATING DOCK DECKS.

1 SITE PLAN - AURORA HARBOR

LUMINAIRE SCHEDULE

TYPE	DESCRIPTION	MANUFACTURER	LAMPS	REMARKS
A1	POLE MOUNTED LED AREA LIGHT, IP66 OR BETTER, MARINE GRADE, ALUMINUM HOUSING, WALL MOUNTING ARM, TYPE 1 DISTRIBUTION, INTEGRAL ELECTRONIC DRIVER	CROUSE-HINDS PVM-3L-W-3TW-R1/UNV1	41W LED 80 CRI, 3000K	
A2	POLE MOUNTED LED AREA LIGHT, IP66 OR BETTER, MARINE GRADE, ALUMINUM HOUSING, WALL MOUNTING ARM, TYPE 5 DISTRIBUTION, INTEGRAL ELECTRONIC DRIVER	CROUSE-HINDS PVM-3L-W-3TW-/UNV1	41W LED 80 CRI, 3000K	
B	18" SURFACE MOUNTED EXTERIOR RATED LINEAR LED FIXTURE WITH ALUMINUM HOUSING WITH 60 DEGREE BEAM SPREAD, REMOTE ELECTRONIC DRIVER, BLACK FINISH	IO LIGHTING 05-E-3K-60-101-2-18-1	5.3W LED 3000K, CRI 70	
C	PENDANT MOUNT LED, DIE CAST ALUMINUM HOUSING, WET LOCATION, FLAT FROSTED ACRYLIC LENS, INTEGRATED ELECTRONIC DRIVER	HUBBELL LIGHTING VP1-VBLU15-VL15A	18.7W LED 5000K	MOUNT AT 7'-0" AFF TO BOTTOM OF FIXTURE, UON.

CITY & BOROUGH OF JUNEAU DOCKS & HARBORS

HAIGHT & ASSOCIATES
526 Main Street, Juneau, AK 99801
(907) 586-9788

PND ENGINEERS, INC.
9360 Glacier Highway, Ste. 100
Juneau, Alaska 99801
Phone: 907-586-2093
Fax: 907-586-2099
www.pndengineers.com

REVISIONS

REV.	DATE	DESCRIPTION	DWN.	CKD.	APP.

DESIGN: KHD/BCH CHECKED: BCH
DRAWN: KHD APPROVED: BCH
SCALE: AS SHOWN
DATE: Mar 13, 2014

STATE OF ALASKA B.C. HAIGHT EE 4800 REGISTERED PROFESSIONAL ENGINEER

CITY & BOROUGH OF JUNEAU, ALASKA
AURORA HARBOR REBUILD - PHASE I
CONTRACT NO. DH 12-160

SHEET TITLE: NEW LIGHTING

PND PROJECT NO.: 122055 DWG. FILE:

E3.01 SHEET 27 OF 28

Mar 13, 2014 - 8:17am
F:\Projects\137 PN&D\Vis Aurora Harbor Rebuild Phase I\Drawings\Working\E3.01.dwg (E1.00 tab)

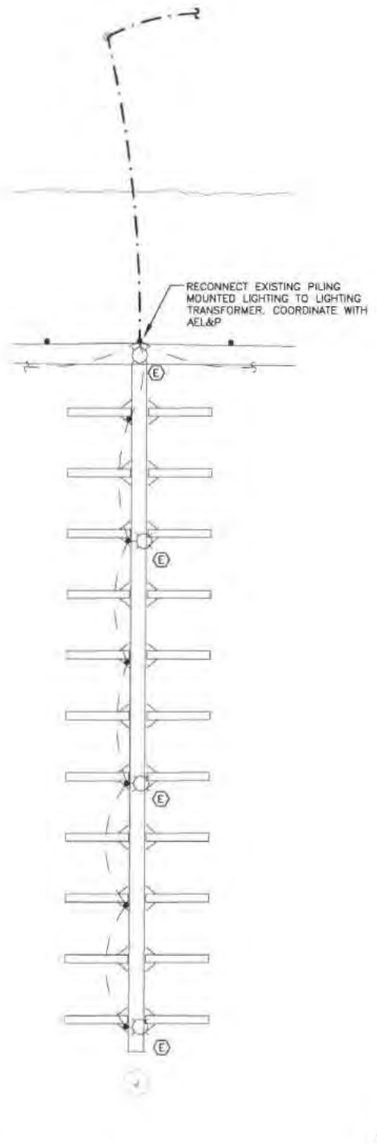

1 SITE PLAN - FLOAT J

SCALE IN FEET
0 30 60 FT.

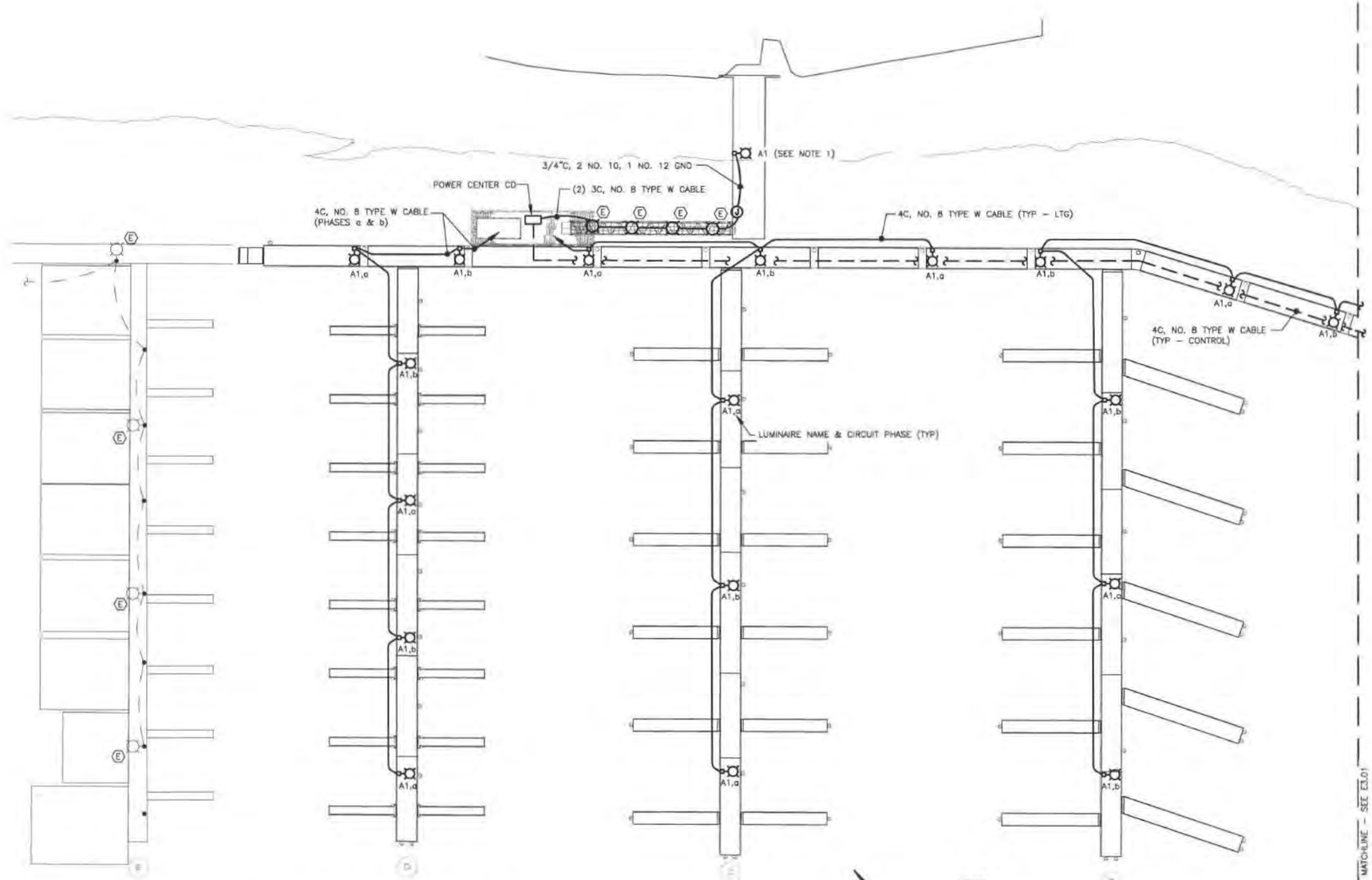

2 SITE PLAN - AURORA HARBOR

SCALE IN FEET
0 30 60 FT.

NOTES

1. TYPE A LUMINAIRES TO BE MOUNTED ON 16'-0" TALL POLE.
2. CABLES TO BE ROUTED IN FIBERGLASS TRAYS BENEATH FLOATING DOCK DECKS.

CITY & BOROUGH OF JUNEAU DOCKS & HARBORS

HAIGHT & ASSOCIATES
526 Main Street, Juneau, AK 99801
(907) 586-9788

REVISIONS

REV.	DATE	DESCRIPTION	DWN.	CKD.	APP.

PND ENGINEERS, INC.
9360 Glacier Highway, Ste. 100
Juneau, Alaska 99801
Phone: 907-586-2093
Fax: 907-586-2099
www.pndengineers.com

DESIGN: KHD/BCH CHECKED: BCH
DRAWN: KHD APPROVED: BCH
SCALE: AS SHOWN
DATE: Mar 13, 2014

STATE OF ALASKA 1913 B.C. HAIGHT EE 4800 REGISTERED PROFESSIONAL ENGINEER

CITY & BOROUGH OF JUNEAU, ALASKA
AURORA HARBOR REBUILD - PHASE I
CONTRACT NO. DH 12-160

SHEET TITLE: **NEW LIGHTING**

PND PROJECT NO.: 122055 DWG. FILE:

E3.02
SHEET 28 OF 28

Mar 13, 2014 – 8:17am
I:\Projects\137 PH&H\05 Aurora Harbor Rebuild Phase I\Drawings\Working\E3.02.dwg (E1.00 tab)