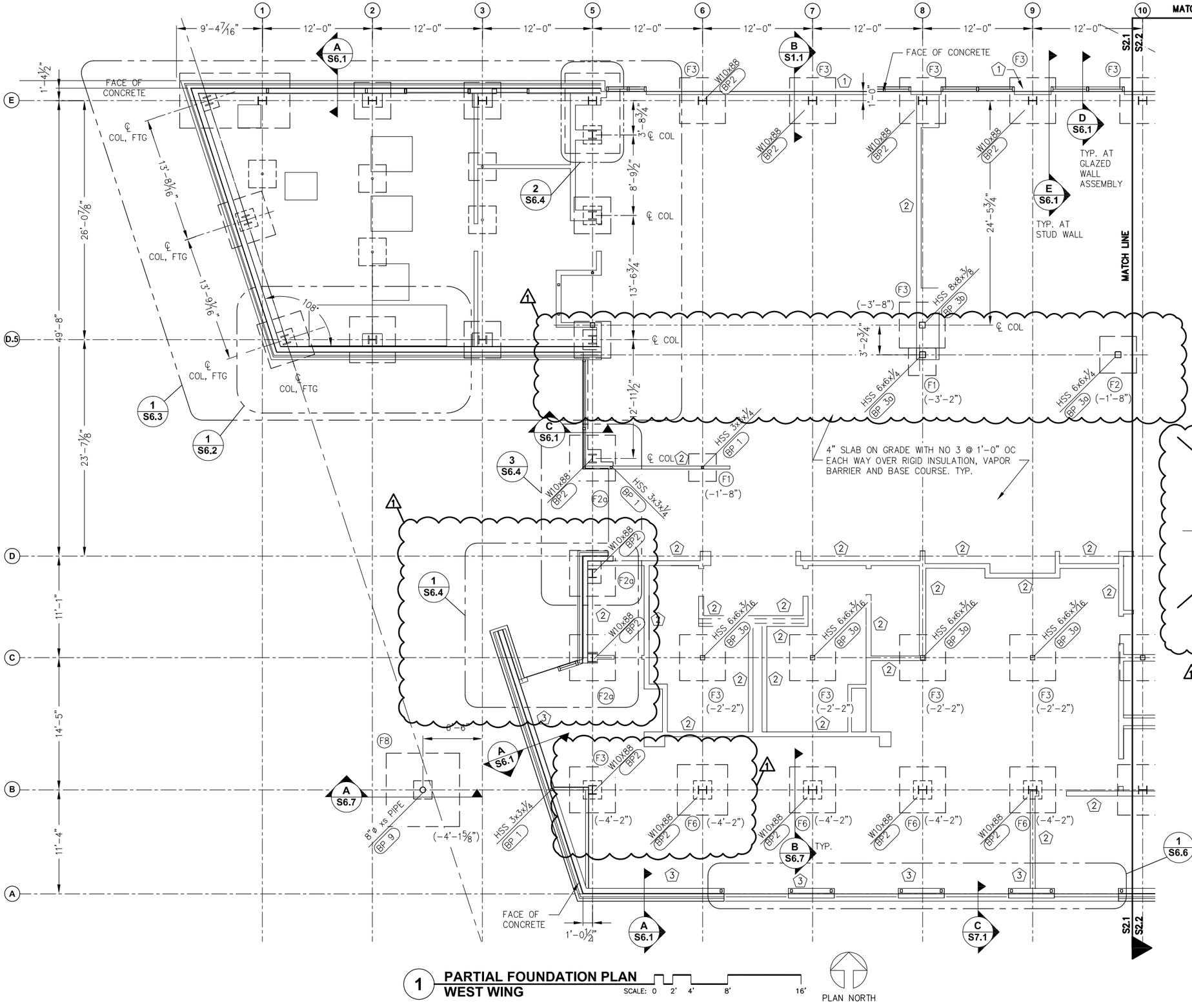

1 **PARTIAL FOUNDATION PLAN WEST WING**

SCALE: 0 2' 4' 8' 16'

PLAN NORTH

NOTES

1. (F#) INDICATES FOOTING TYPE SEE SCHEDULE AND TYPICAL DETAILS
2. (BP#) INDICATES BASE ℄ TYPE SEE TYPICAL DETAILS
3. (#) INDICATES STUD WALL TYPE SEE SCHEDULE AND TYPICAL DETAILS.
4. SEE MECHANICAL FOR EQUIPMENT AND HOUSEKEEPING PAD LOCATIONS. EXTEND PAD 6" BEYOND EQUIPMENT FOOT PRINT.
5. GRIDS AND DIMENSION TO ℄ COL UNLESS NOTED OTHERWISE.
6. BOTTOM OF PERIMETER COLUMN FOOTINGS AT 4'-4 5/8" BELOW TOP OF SLAB UNLESS NOTED (#-#) WHICH INDICATES NON TYPICAL BOTTOM OF FOOTING ELEVATION, BELOW TOP OF SLAB.
7. BOTTOM OF INTERIOR FOOTING, ELEVATIONS INDICTED (#-#), AS DISTANCE BELOW TOP OF SLAB.

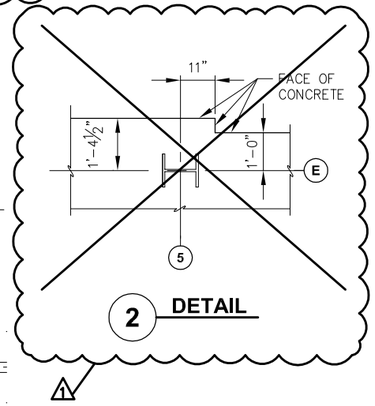

2 **DETAIL**

STATE OF ALASKA
Christopher Gianotti
CE-7559
REGISTERED PROFESSIONAL ENGINEER

NorthWind Architects LLC
126 Seward St
Juneau, AK 99801
Ph #907.586.6150
www.northwindarch.com

PND ENGINEERS, INC.
9360 Glacier Highway, Ste. 100
JUNEAU, ALASKA 99801
PND # 132062
PHONE (907) 586-2093
FAX (907) 586-2099

1" ACTUAL

IF THE ABOVE DIMENSION DOES NOT MEASURE ONE INCH (1") EXACTLY, THIS DRAWING WILL HAVE BEEN ENLARGED OR REDUCED, AFFECTING ALL LABELED SCALES.

MENDENHALL VALLEY PUBLIC LIBRARY

CBJ Contract # E14-051
Juneau, Alaska

SHEET TITLE:
PARTIAL FOUNDATION PLAN- WEST WING

REVISION:
1 ADDENDUM 01, 3/24/14
2 -
3 -
4 -

SHEET #
S2.1

DATE: 03/03/2014

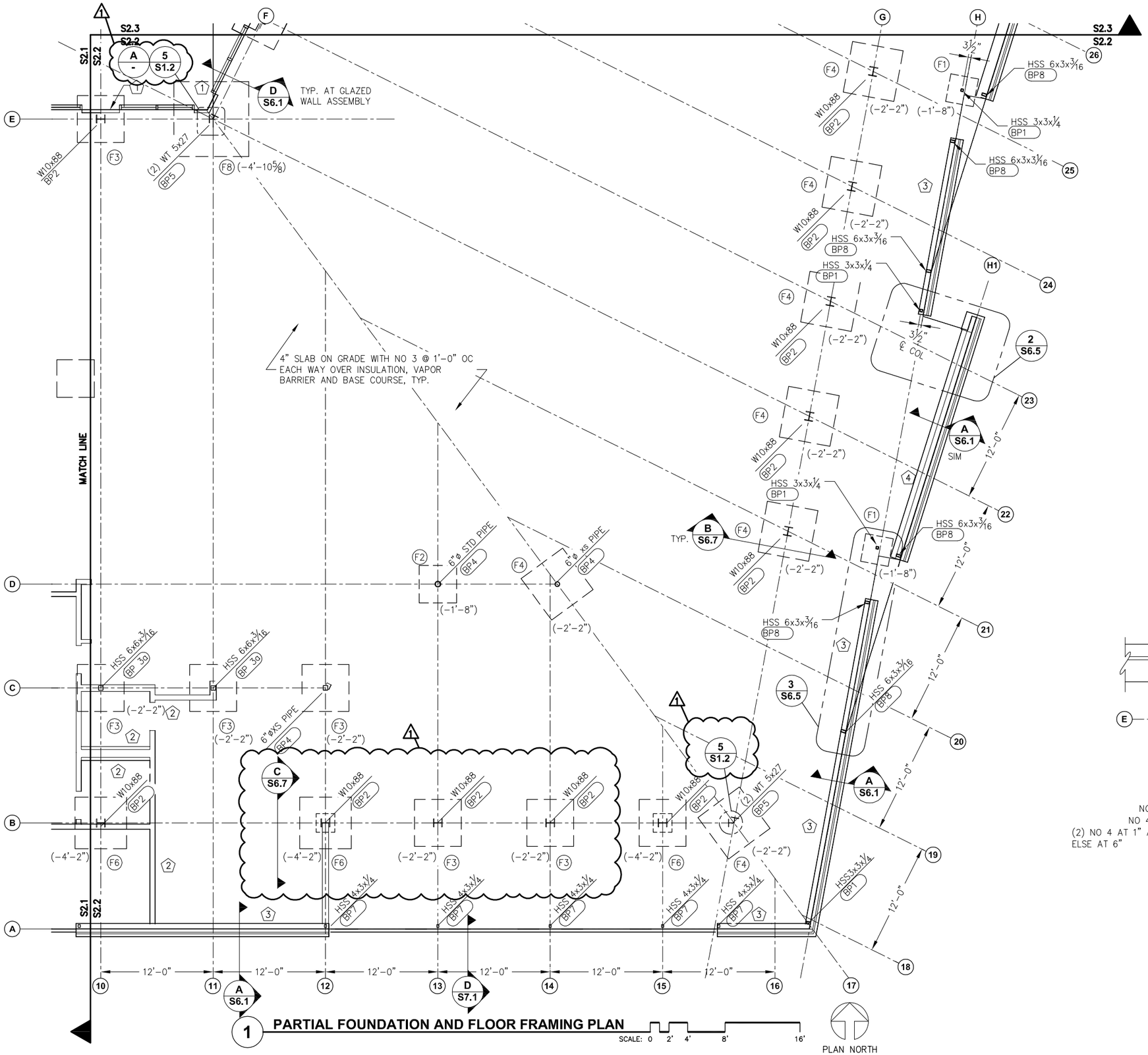

1 **PARTIAL FOUNDATION AND FLOOR FRAMING PLAN**

SCALE: 0 2' 4' 8' 16'

PLAN NORTH

NOTES

1. (F#) INDICATES FOOTING TYPE SEE SCHEDULE AND TYPICAL DETAILS
2. (BP#) INDICATES BASE ℄ TYPE SEE TYPICAL DETAILS
3. (#) INDICATES STUD WALL TYPE SEE SCHEDULE AND TYPICAL DETAILS.
4. GRIDS AND DIMENSIONS TO ℄ COLUMNS UNLESS NOTED OTHERWISE.
5. BOTTOM OF PERIMETER OF COLUMN FOOTING ELEVATION IS TYPICALLY 4'-4⅝" BELOW TOP OF SLAB UNLESS NOTED (#-#) WHICH INDICATES NON-TYPICAL BOTTOM OF FOOTING ELEVATION.
6. BOTTOM OF INTERIOR FOOTING, ELEVATIONS INDICTED (#-#), AS DISTANCE BELOW TOP OF SLAB.

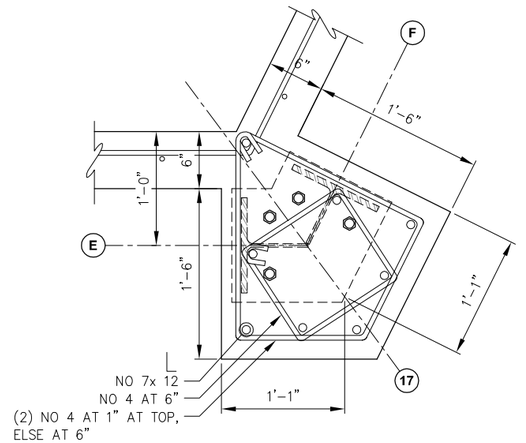

A **PEDESTAL DETAIL**

STATE OF ALASKA
Christopher Gianotti
CE-7559
REGISTERED PROFESSIONAL ENGINEER

NorthWind Architects LLC
126 Seward St
Juneau, AK 99801
Ph #907.586.6150
www.northwindarch.com

PND ENGINEERS, INC.
9360 Glacier Highway, Ste. 100
JUNEAU, ALASKA 99801
PND # 132062
PHONE (907) 586-2093
FAX (907) 586-2099

1" ACTUAL

IF THE ABOVE DIMENSION DOES NOT MEASURE ONE INCH (1") EXACTLY, THIS DRAWING WILL HAVE BEEN ENLARGED OR REDUCED, AFFECTING ALL LABELED SCALES.

MENDENHALL VALLEY PUBLIC LIBRARY

CBJ Contract # E14-051
Juneau, Alaska

SHEET TITLE:
PARTIAL FOUNDATION AND FLOOR FRAMING PLAN- NORTH WING

REVISION:
1 ADDENDUM 01, 3/24/14
2 -
3 -
4 -

SHEET # S2.2

DATE: 03/03/2014

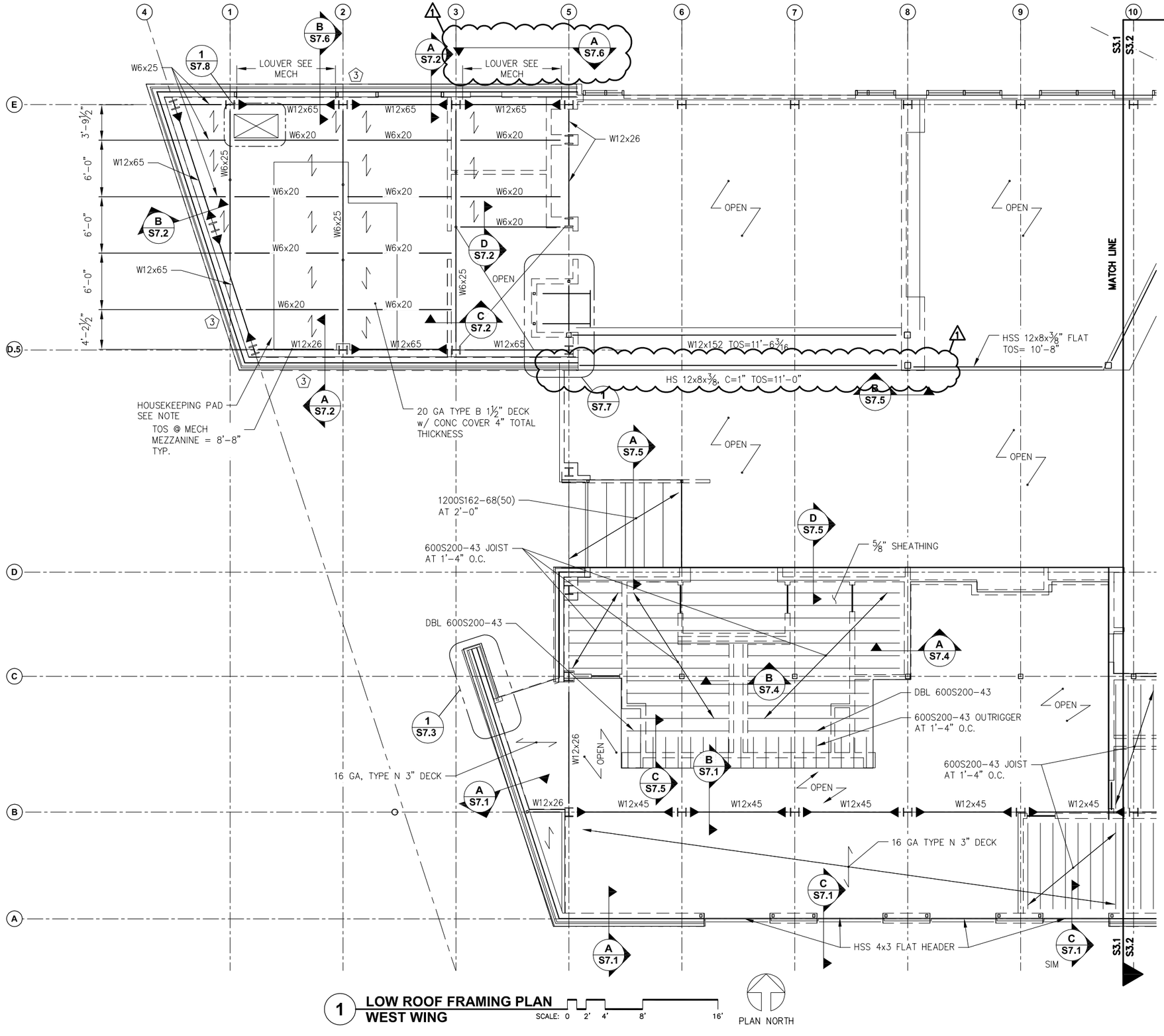

1 **LOW ROOF FRAMING PLAN**
WEST WING
SCALE: 0 2' 4' 8' 16'

PLAN NORTH

STATE OF ALASKA
Christopher Gianotti
CE-7559
REGISTERED PROFESSIONAL ENGINEER

NorthWind Architects LLC
126 Seward St
Juneau, AK 99801
Ph #907.586.6150
www.northwindarch.com

PND ENGINEERS, INC.
9360 Glacier Highway, Ste. 100
JUNEAU, ALASKA 99801
PND # 132062
PHONE (907) 586-2093
FAX (907) 586-2099

1" ACTUAL

IF THE ABOVE DIMENSION DOES NOT MEASURE ONE INCH (1") EXACTLY, THIS DRAWING WILL HAVE BEEN ENLARGED OR REDUCED, AFFECTING ALL LABELED SCALES.

MENDENHALL VALLEY PUBLIC LIBRARY

CBJ Contract # E14-051
Juneau, Alaska

SHEET TITLE:
PARTIAL LOW ROOF PLAN - WEST WING

REVISION:
1 ADDENDUM 01, 3/24/14
2 -
3 -
4 -

SHEET # S3.1

DATE: 03/03/2014

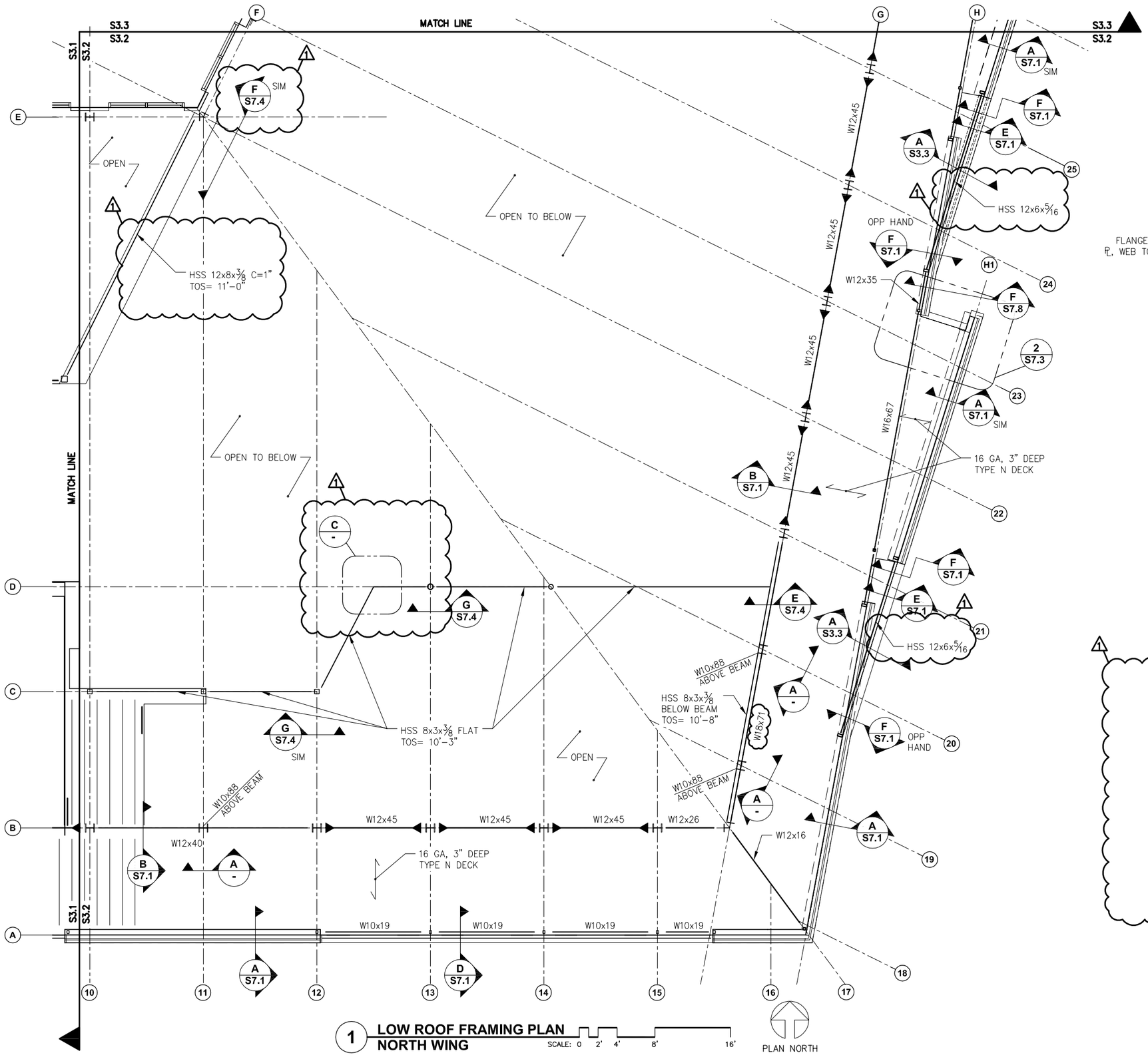

1 LOW ROOF FRAMING PLAN NORTH WING SCALE: 0 2' 4' 8' 16'

NOTES:

1. INDICATES END PLATE MOMENT FRAME CONNECTION SEE TYPICAL DETAILS OR SECTION DETAILS.
2. C=#, INDICATES MIDSPAN CAMBER

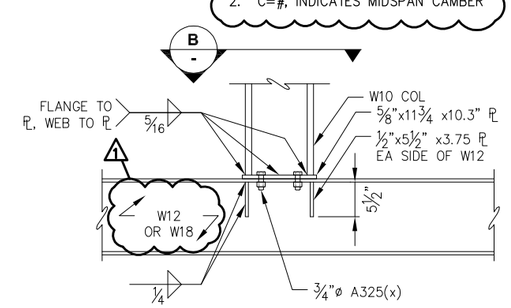

A W10 COL ON W12 BEAM ELEVATION

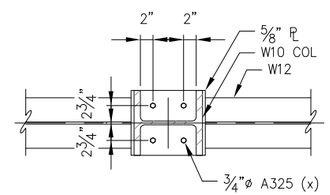

B W10 ON BEAM BASE PLATE

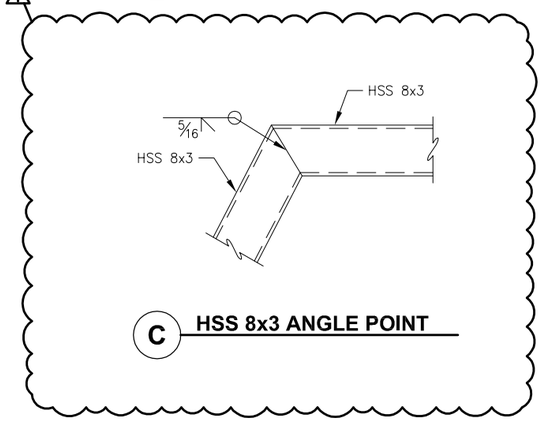

C HSS 8x3 ANGLE POINT

STATE OF ALASKA
Christopher Gianotti
CE-7559
REGISTERED PROFESSIONAL ENGINEER

NorthWind Architects LLC
126 Seward St
Juneau, AK 99801
Ph #907.586.6150
www.northwindarch.com

PND ENGINEERS, INC.
9360 Glacier Highway, Ste. 100
JUNEAU, ALASKA 99801
PND # 132062
PHONE (907) 586-2093
FAX (907) 586-2099

1" ACTUAL

IF THE ABOVE DIMENSION DOES NOT MEASURE ONE INCH (1") EXACTLY, THIS DRAWING WILL HAVE BEEN ENLARGED OR REDUCED, AFFECTING ALL LABELED SCALES.

MENDENHALL VALLEY PUBLIC LIBRARY

CBJ Contract # E14-051
Juneau, Alaska

SHEET TITLE:
PARTIAL LOW ROOF FRAMING PLAN - NORTH WING

REVISION:
1 ADDENDUM 01, 3/24/14
2 -
3 -
4 -

SHEET # S3.2

DATE: 03/03/2014

NOTES:

1. INDICATES END PLATE MOMENT FRAME CONNECTION SEE TYPICAL DETAILS OR SECTION DETAILS.

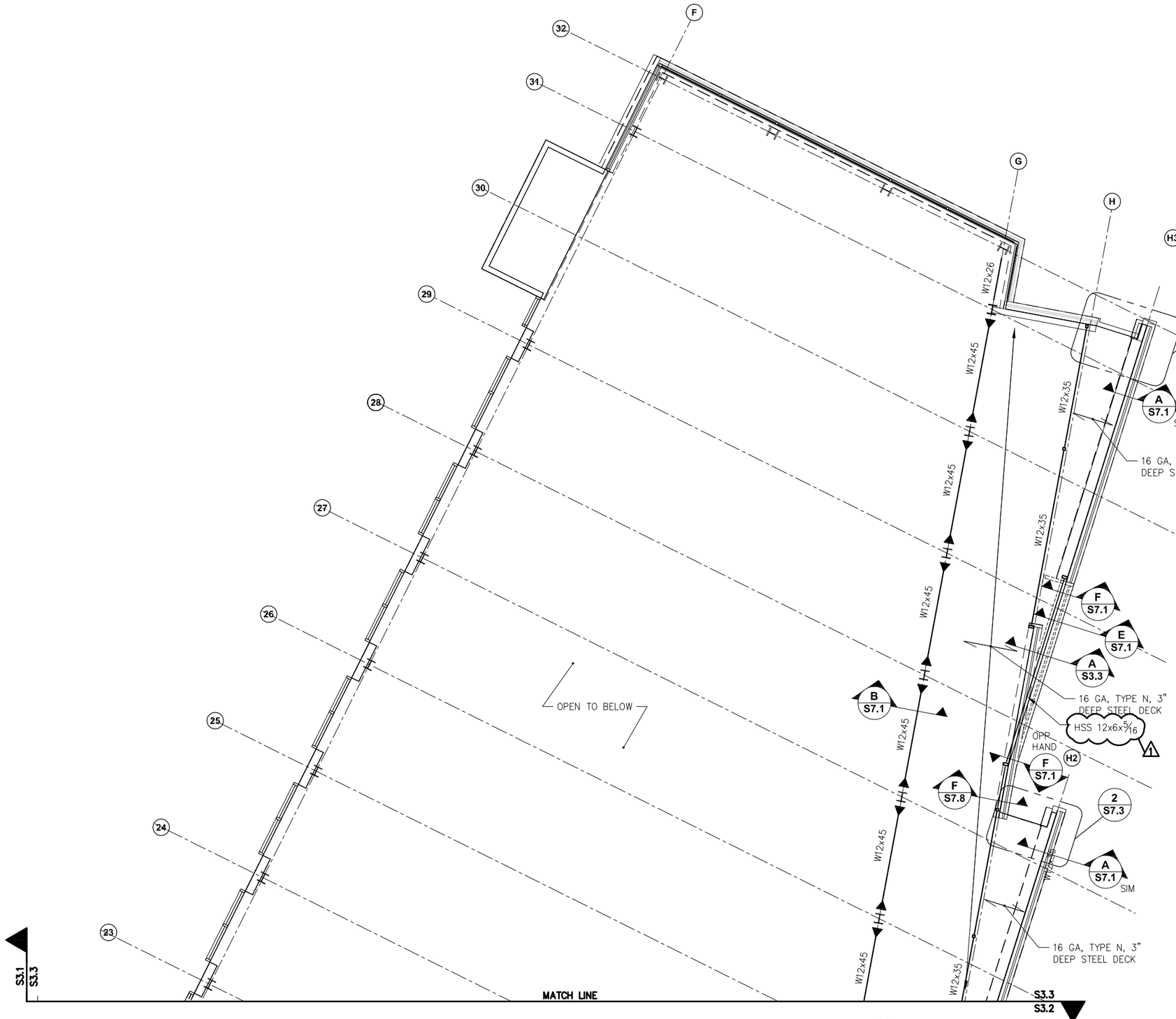

1 LOW ROOF FRAMING PLAN NORTH WING

SCALE: 0 2' 4' 8' 16'

PLAN NORTH

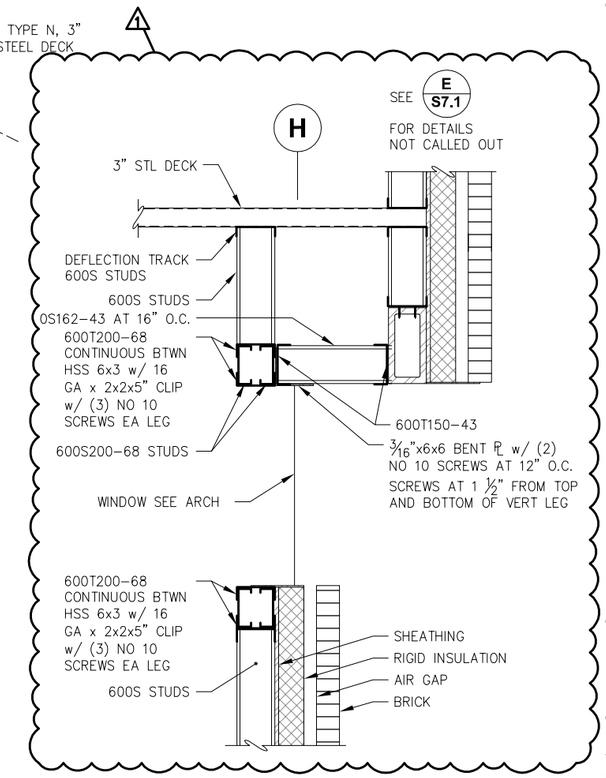

A SECTION AT WINDOW

SCALE: 0 6" 1' 2'

STATE OF ALASKA
Christopher Gianotti
CE-7559
REGISTERED PROFESSIONAL ENGINEER

NorthWind Architects LLC
126 Seward St
Juneau, AK 99801
Ph #907.586.6150
www.northwindarch.com

PND ENGINEERS, INC.
9360 Glacier Highway, Ste. 100
JUNEAU, ALASKA 99801
PND # 132062
PHONE (907) 586-2093
FAX (907) 586-2099

1" ACTUAL

IF THE ABOVE DIMENSION DOES NOT MEASURE ONE INCH (1") EXACTLY, THIS DRAWING WILL HAVE BEEN ENLARGED OR REDUCED, AFFECTING ALL LABELED SCALES.

MENDENHALL VALLEY PUBLIC LIBRARY

CBJ Contract # E14-051
Juneau, Alaska

SHEET TITLE:
PARTIAL LOW ROOF FRAMING PLAN - NORTH WING

REVISION:
1 ADDENDUM 01, 3/24/14
2 -
3 -
4 -

SHEET # S3.3

DATE: 03/03/2014

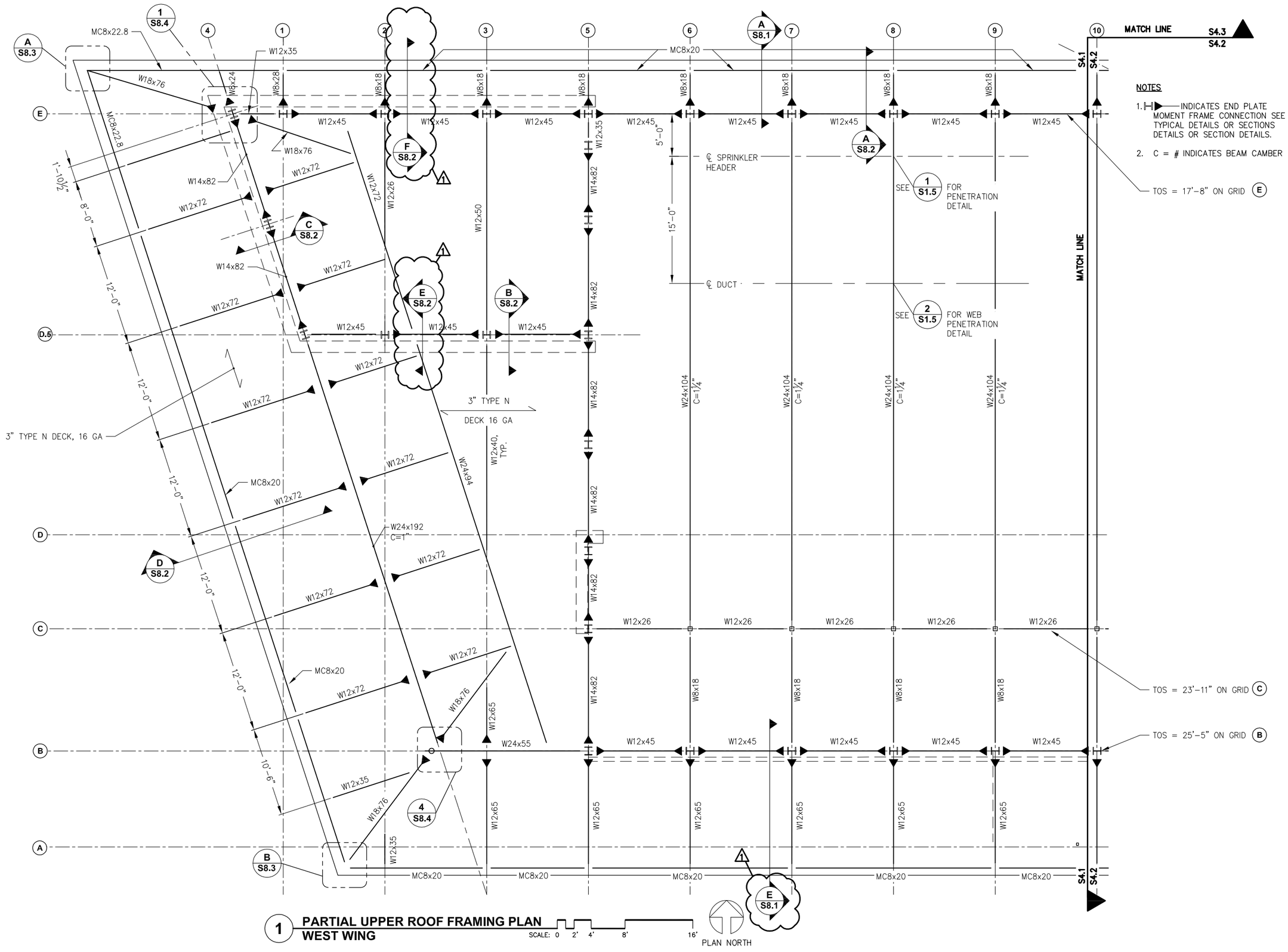

1 PARTIAL UPPER ROOF FRAMING PLAN
WEST WING

SCALE: 0 2' 4' 8' 16'

PLAN NORTH

NOTES

1. INDICATES END PLATE MOMENT FRAME CONNECTION SEE TYPICAL DETAILS OR SECTIONS DETAILS OR SECTION DETAILS.
2. C = # INDICATES BEAM CAMBER

STATE OF ALASKA
Christopher Gianotti
CE-7559
REGISTERED PROFESSIONAL ENGINEER

NorthWind Architects LLC
126 Seward St
Juneau, AK 99801
Ph #907.586.6150
www.northwindarch.com

PND ENGINEERS, INC.
9360 Glacier Highway, Ste. 100
JUNEAU, ALASKA 99801
PND # 132062
PHONE (907) 586-2093
FAX (907) 586-2099

1" ACTUAL

IF THE ABOVE DIMENSION DOES NOT MEASURE ONE INCH (1") EXACTLY, THIS DRAWING WILL HAVE BEEN ENLARGED OR REDUCED, AFFECTING ALL LABELED SCALES.

MENDENHALL VALLEY PUBLIC LIBRARY

CBJ Contract # E14-051
Juneau, Alaska

SHEET TITLE:
PARTIAL UPPER ROOF FRAMING PLAN- WEST WING

REVISION:
1 ADDENDUM 01, 3/24/14
2 -
3 -
4 -

SHEET # S4.1

DATE: 03/03/2014

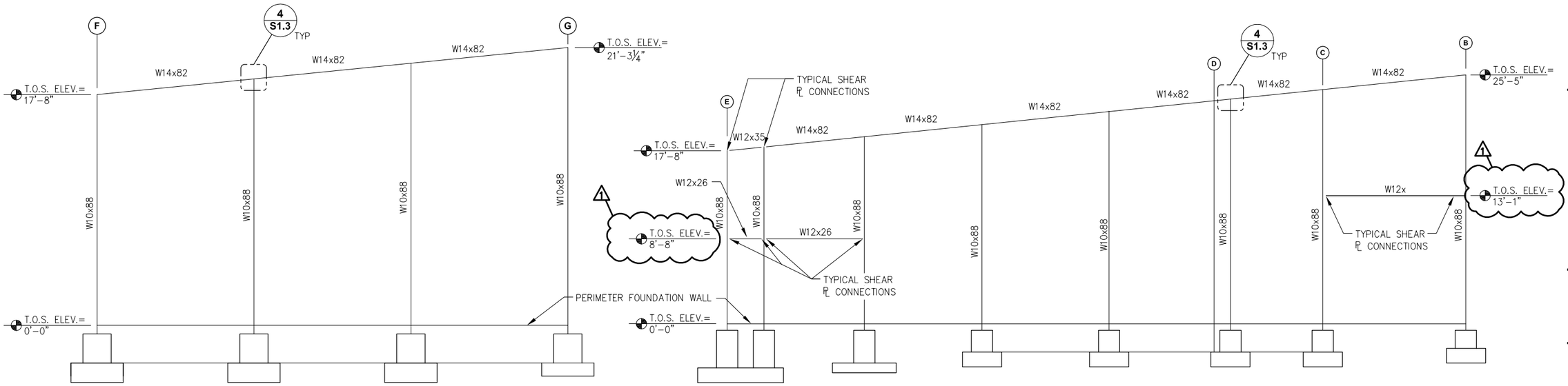

A **RIGID FRAME ELEVATION**
GRID 32

B **RIGID FRAME ELEVATION**
GRID 5

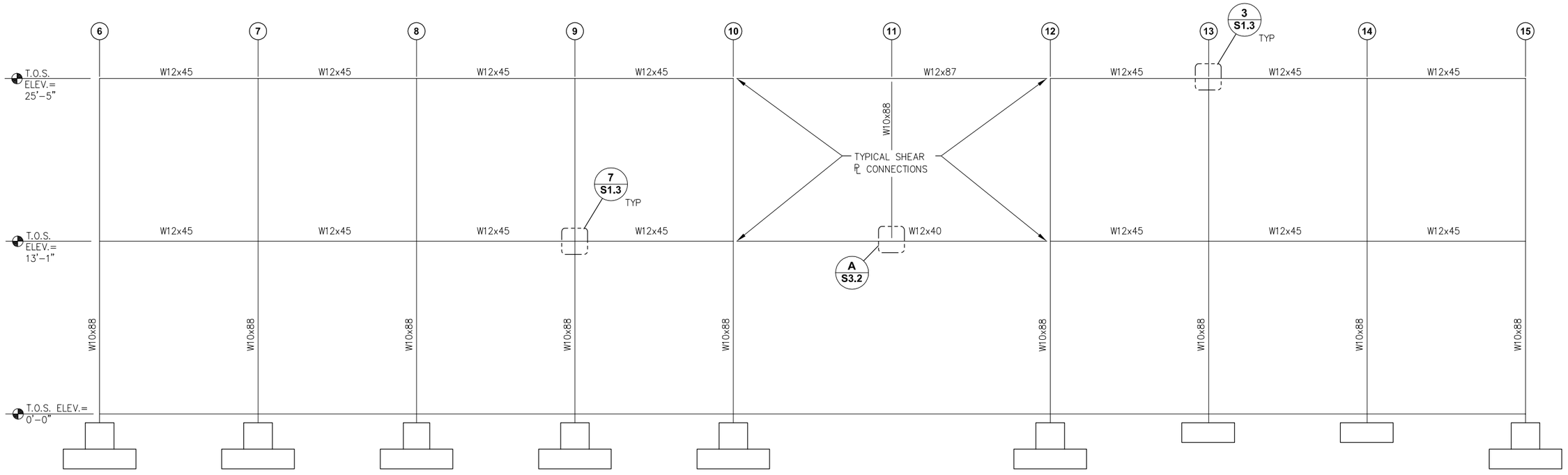

C **RIGID FRAME ELEVATION**
GRID B

STATE OF ALASKA
Christopher Gianotti
CE-7559
REGISTERED PROFESSIONAL ENGINEER

NorthWind Architects LLC
126 Seward St
Juneau, AK 99801
Ph #907.586.6150
www.northwindarch.com

PND ENGINEERS, INC.
9360 Glacier Highway, Ste. 100
JUNEAU, ALASKA 99801
PND # 132062
PHONE (907) 586-2093
FAX (907) 586-2099

1" ACTUAL

IF THE ABOVE DIMENSION DOES NOT MEASURE ONE INCH (1") EXACTLY, THIS DRAWING WILL HAVE BEEN ENLARGED OR REDUCED, AFFECTING ALL LABELED SCALES.

MENDENHALL VALLEY PUBLIC LIBRARY

CBJ Contract # E14-051
Juneau, Alaska

SHEET TITLE:
SECTIONS AND ELEVATIONS

REVISION:
1 ADDENDUM 01, 3/24/14
2 -
3 -
4 -

SHEET # S5.0

DATE: 03/03/2014

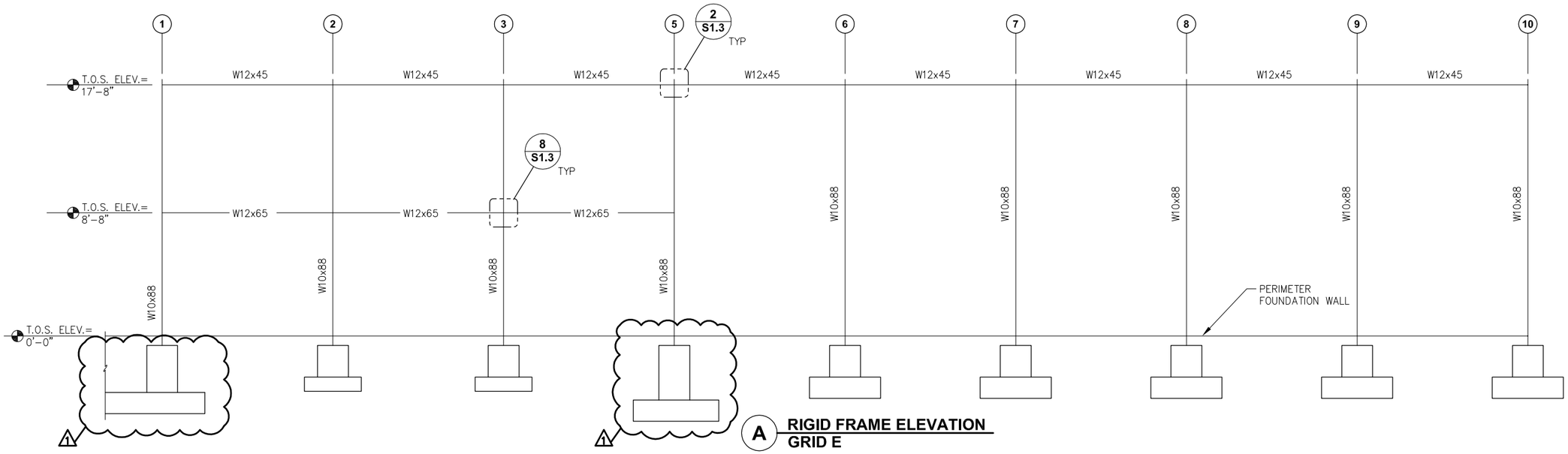

A **RIGID FRAME ELEVATION**
GRID E

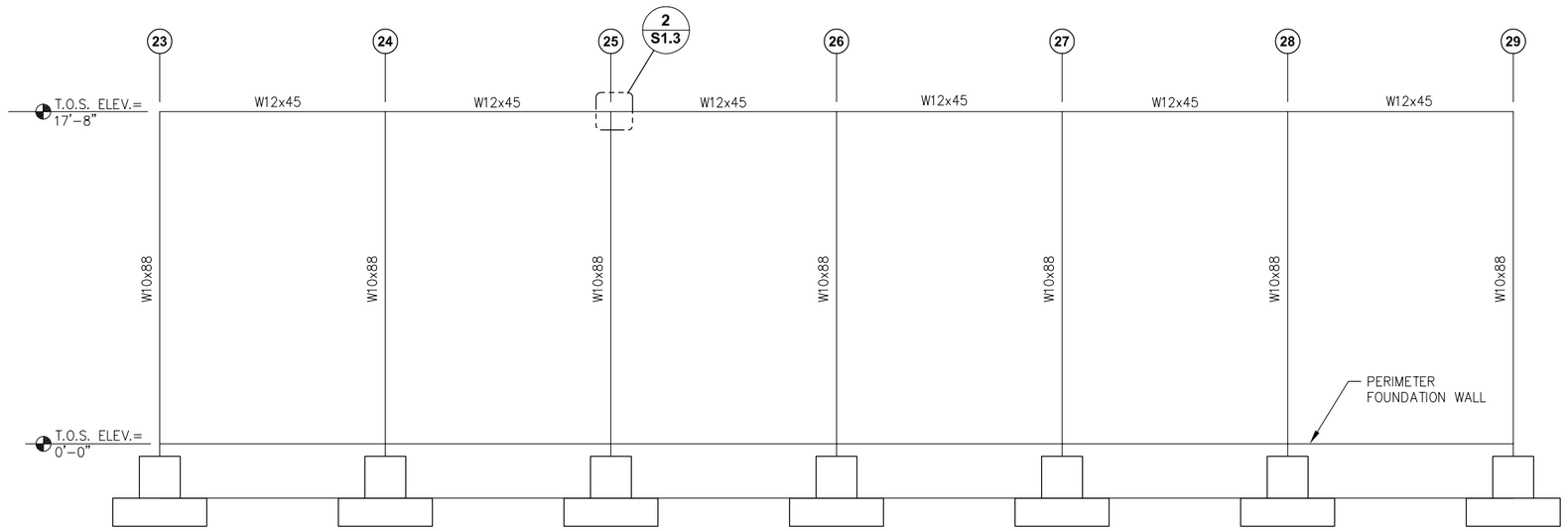

B **RIGID FRAME ELEVATION**
GRID F

STATE OF ALASKA
Christopher Gianotti
CE-7559
REGISTERED PROFESSIONAL ENGINEER

NorthWind Architects LLC
126 Seward St
Juneau, AK 99801
Ph #907.586.6150
www.northwindarch.com

PND ENGINEERS, INC.
9360 Glacier Highway, Ste. 100
JUNEAU, ALASKA 99801
PND # 132062
PHONE (907) 586-2093
FAX (907) 586-2099

1" ACTUAL

IF THE ABOVE DIMENSION DOES NOT MEASURE ONE INCH (1") EXACTLY, THIS DRAWING WILL HAVE BEEN ENLARGED OR REDUCED, AFFECTING ALL LABELED SCALES.

MENDENHALL VALLEY PUBLIC LIBRARY

CBJ Contract # E14-051
Juneau, Alaska

SHEET TITLE:
SECTIONS AND ELEVATIONS

REVISION:
1 ADDENDUM 01, 3/24/14
2 -
3 -
4 -

SHEET # S5.1

DATE: 03/03/2014

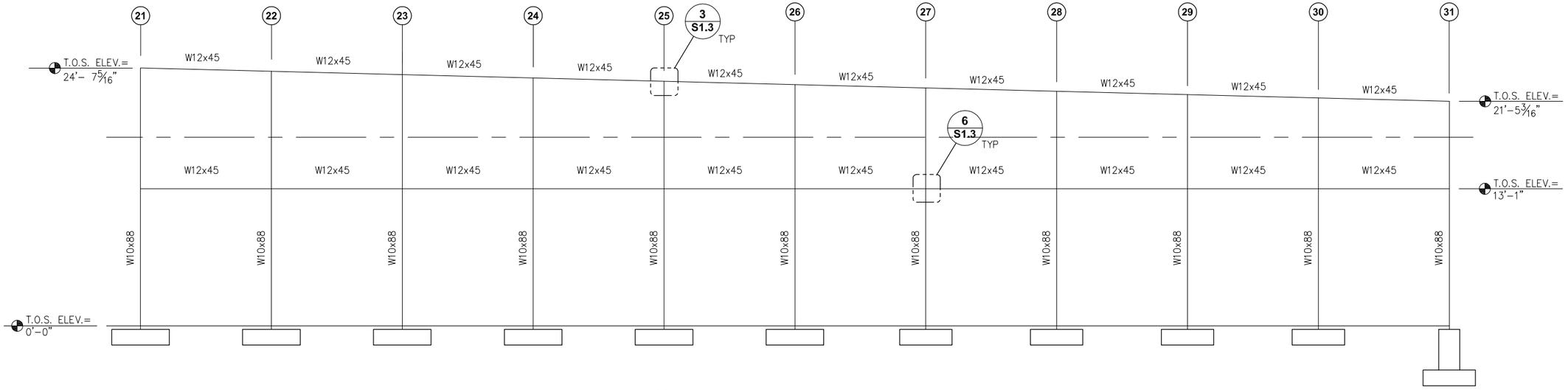

A **RIGID FRAME ELEVATION**
GRID G

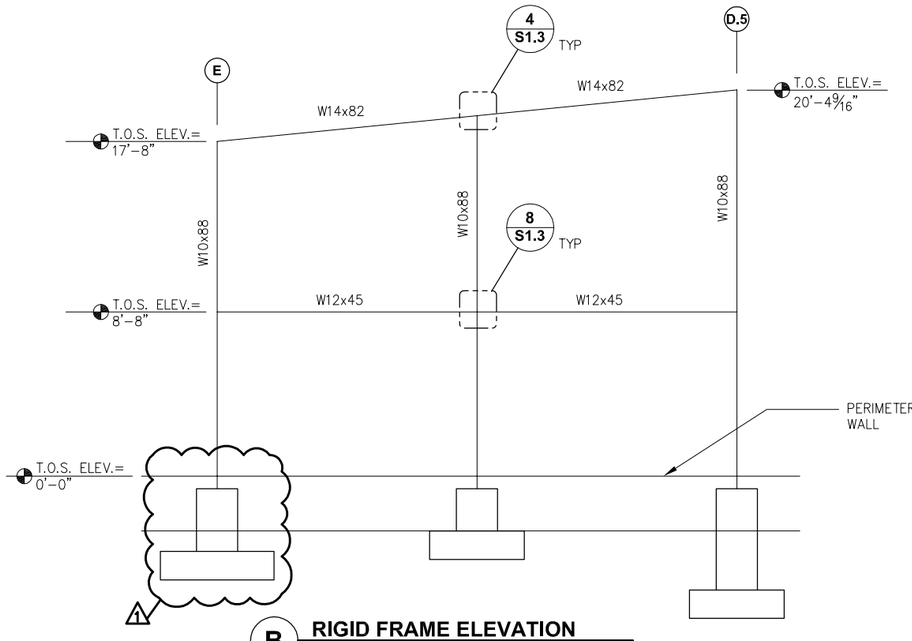

B **RIGID FRAME ELEVATION**
GRID 4

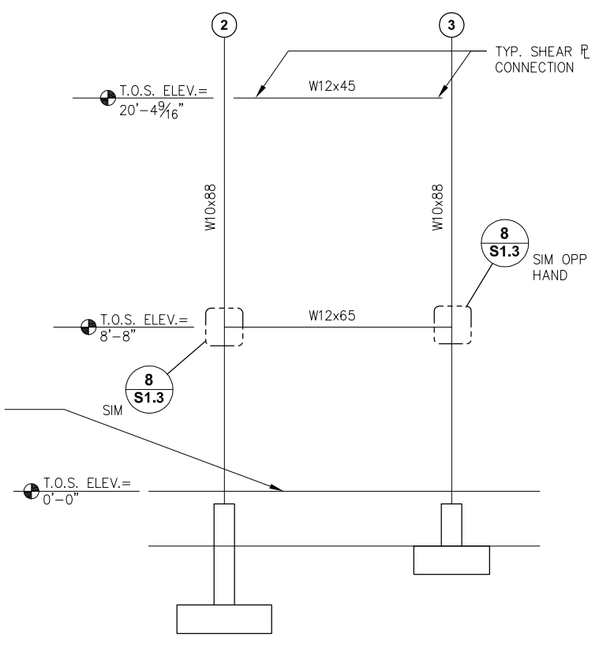

B **RIGID FRAME ELEVATION**
GRID D.5

NorthWind Architects LLC
126 Seward St
Juneau, AK 99801
Ph #907.586.6150
www.northwindarch.com

PND ENGINEERS, INC.
9360 Glacier Highway, Ste. 100
JUNEAU, ALASKA 99801
PHONE (907) 586-2093
PND # 132062 FAX (907) 586-2099

1" ACTUAL

IF THE ABOVE DIMENSION DOES NOT MEASURE ONE INCH (1") EXACTLY, THIS DRAWING WILL HAVE BEEN ENLARGED OR REDUCED, AFFECTING ALL LABELED SCALES.

MENDENHALL VALLEY PUBLIC LIBRARY

CBJ Contract # E14-051
Juneau, Alaska

SHEET TITLE:
SECTIONS AND ELEVATIONS

REVISION:
1 ADDENDUM 01, 3/24/14
2 -
3 -
4 -

SHEET # S5.2

DATE: 03/03/2014

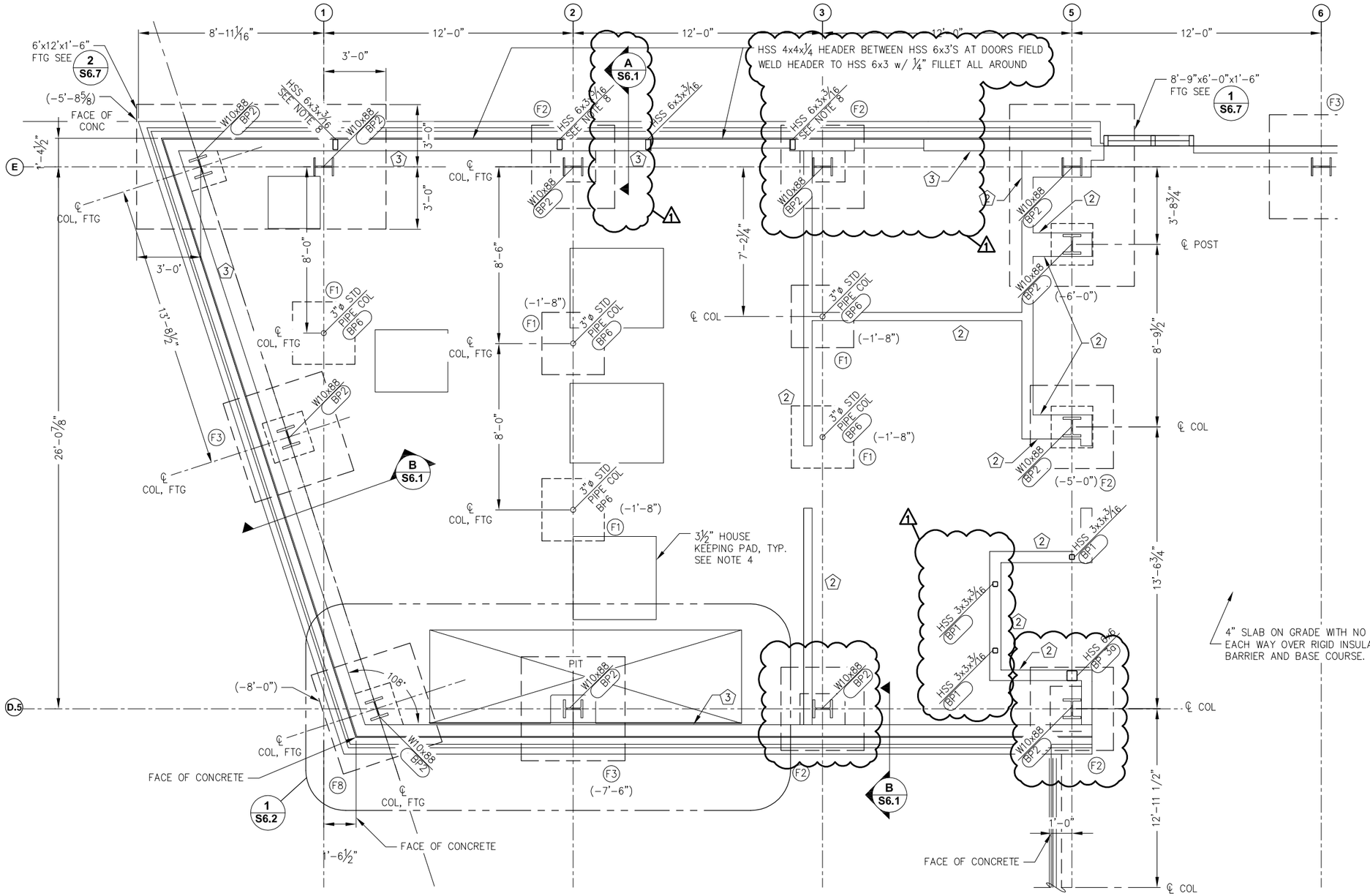

1 PARTIAL FOUNDATION PLAN WEST WING

SCALE: 0 2' 4' 8'

PLAN NORTH

NOTES

1. (F#) INDICATES FOOTING TYPE SEE SCHEDULE AND TYPICAL DETAILS
2. (BP#) INDICATES BASE ℄ TYPE SEE TYPICAL DETAILS
3. (#) INDICATES STUD WALL TYPE SEE SCHEDULE AND TYPICAL DETAILS.
4. SEE MECHANICAL FOR EQUIPMENT AND HOUSEKEEPING PAD LOCATIONS. EXTEND PAD 6" BEYOND EQUIPMENT FOOT PRINT.
5. GRIDS AND DIMENSION TO ℄ COL UNLESS NOTED OTHERWISE.
6. BOTTOM OF PERIMETER OF COLUMN FOOTING ELEVATION IS TYPICALLY 4'-1 5/8" BELOW TOP OF SLAB UNLESS NOTED (#-#) WHICH INDICATES NON-TYPICAL BOTTOM OF FOOTING ELEVATION.
7. BOTTOM OF INTERIOR FOOTING, ELEVATIONS INDICTED (#-#), AS DISTANCE BELOW TOP OF SLAB.
8. CONTINUE HSS 6x3 TO 2ND FLOOR BEAM CONNECT TO BEAM WITH 3/16"x6" VERTICAL PLATE. WELD PLATE TO WEB W12 AND HSS WITH 3/16" FILLET EACH SIDE.

STATE OF ALASKA
Christopher Gianotti
CE-7559
REGISTERED PROFESSIONAL ENGINEER

NorthWind Architects LLC
126 Seward St
Juneau, AK 99801
Ph #907.586.6150
www.northwindarch.com

PND ENGINEERS, INC.
9360 Glacier Highway, Ste. 100
JUNEAU, ALASKA 99801
PND # 132062
PHONE (907) 586-2093
FAX (907) 586-2099

1" ACTUAL

IF THE ABOVE DIMENSION DOES NOT MEASURE ONE INCH (1") EXACTLY, THIS DRAWING WILL HAVE BEEN ENLARGED OR REDUCED, AFFECTING ALL LABELED SCALES.

MENDENHALL VALLEY PUBLIC LIBRARY

CBJ Contract # E14-051
Juneau, Alaska

SHEET TITLE:
PARTIAL FOUNDATION PLAN- WEST WING

REVISION:
1 ADDENDUM 01, 3/24/14
2 -
3 -
4 -

SHEET # S6.3

DATE: 03/03/2014

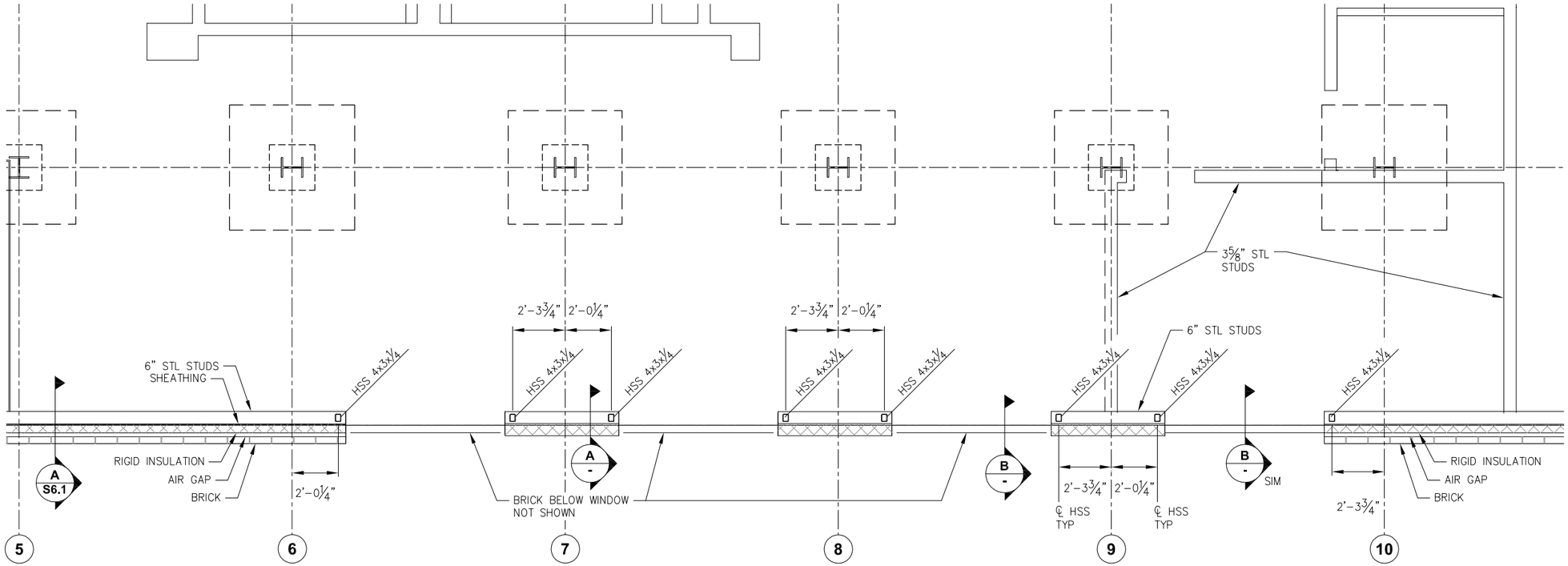

1 PARTIAL PLAN

SCALE: 0 2' 4' 8'

PLAN NORTH

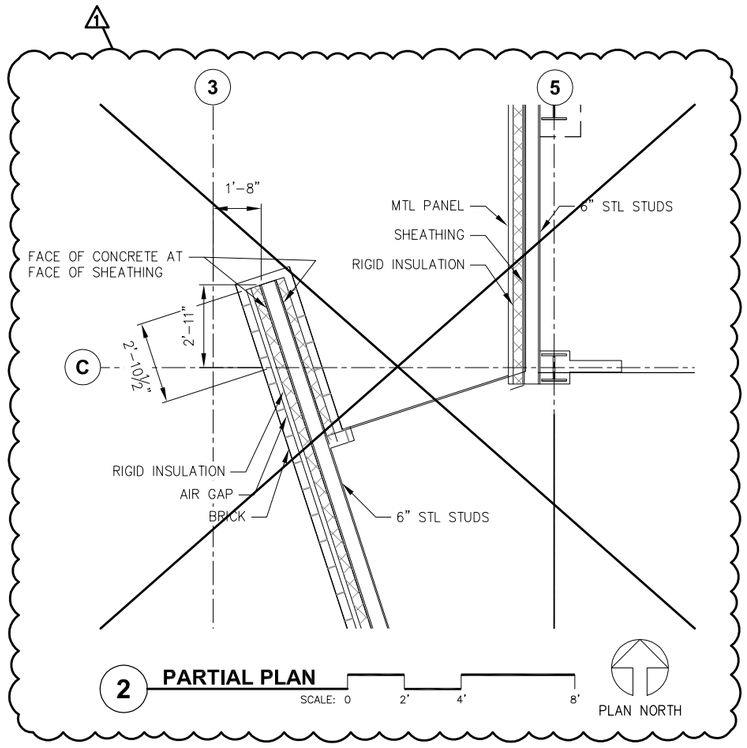

2 PARTIAL PLAN

SCALE: 0 2' 4' 8'

PLAN NORTH

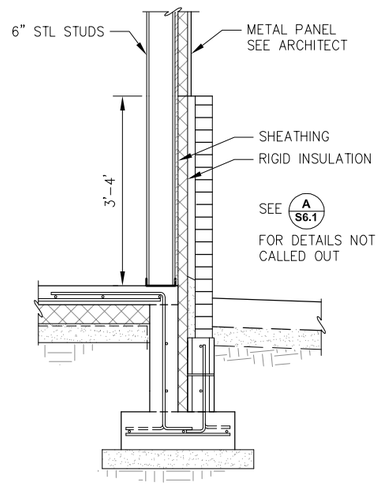

A SECTION AT METAL PANELS BETWEEN WINDOWS

SCALE: 0 6" 1' 2' 4'

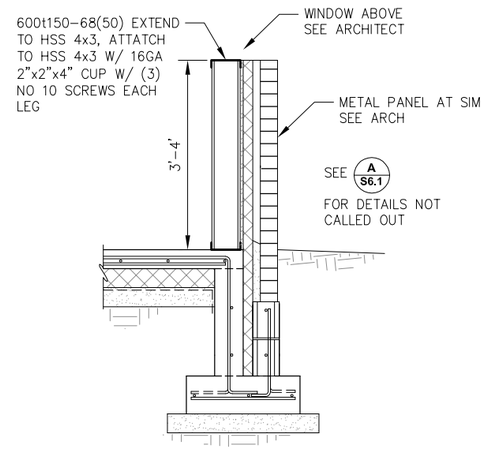

B SECTION BELOW WINDOW

SCALE: 0 6" 1' 2' 4'

STATE OF ALASKA
Christopher Gianotti
CE-7559
REGISTERED PROFESSIONAL ENGINEER

NorthWind Architects LLC
126 Seward St
Juneau, AK 99801
Ph #907.586.6150
www.northwindarch.com

PND ENGINEERS, INC.
9360 Glacier Highway, Ste. 100
JUNEAU, ALASKA 99801
PND # 132062
PHONE (907) 586-2093
FAX (907) 586-2099

1" ACTUAL

IF THE ABOVE DIMENSION DOES NOT MEASURE ONE INCH (1") EXACTLY, THIS DRAWING WILL HAVE BEEN ENLARGED OR REDUCED, AFFECTING ALL LABELED SCALES.

MENDENHALL VALLEY PUBLIC LIBRARY

CBJ Contract # E14-051
Juneau, Alaska

SHEET TITLE:
PARTIAL FOUNDATION PLAN

REVISION:
1 ADDENDUM 01, 3/24/14
2 -
3 -
4 -

SHEET # S6.6

DATE: 03/03/2014

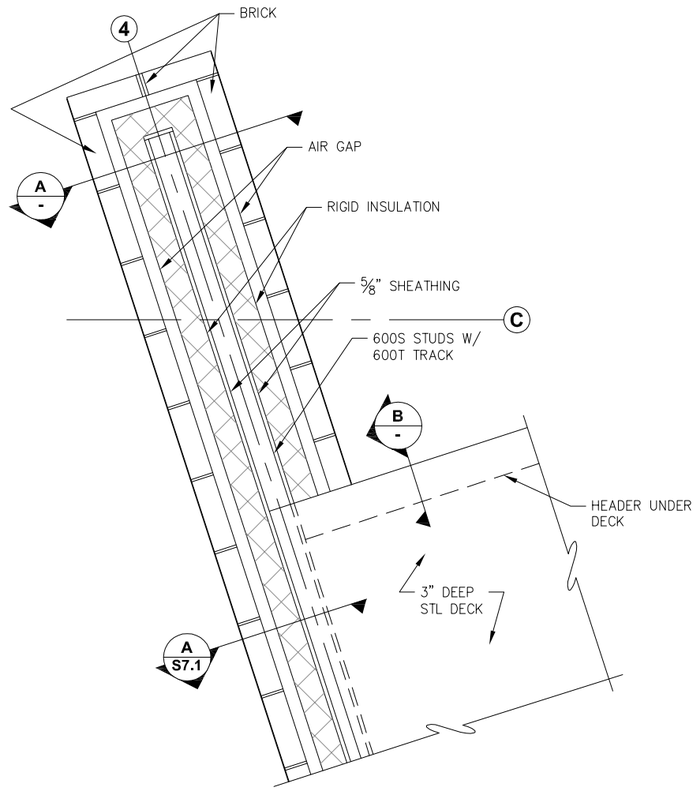

1 FIN WALL DETAIL

SCALE: 0 6" 1' 2'

PLAN NORTH

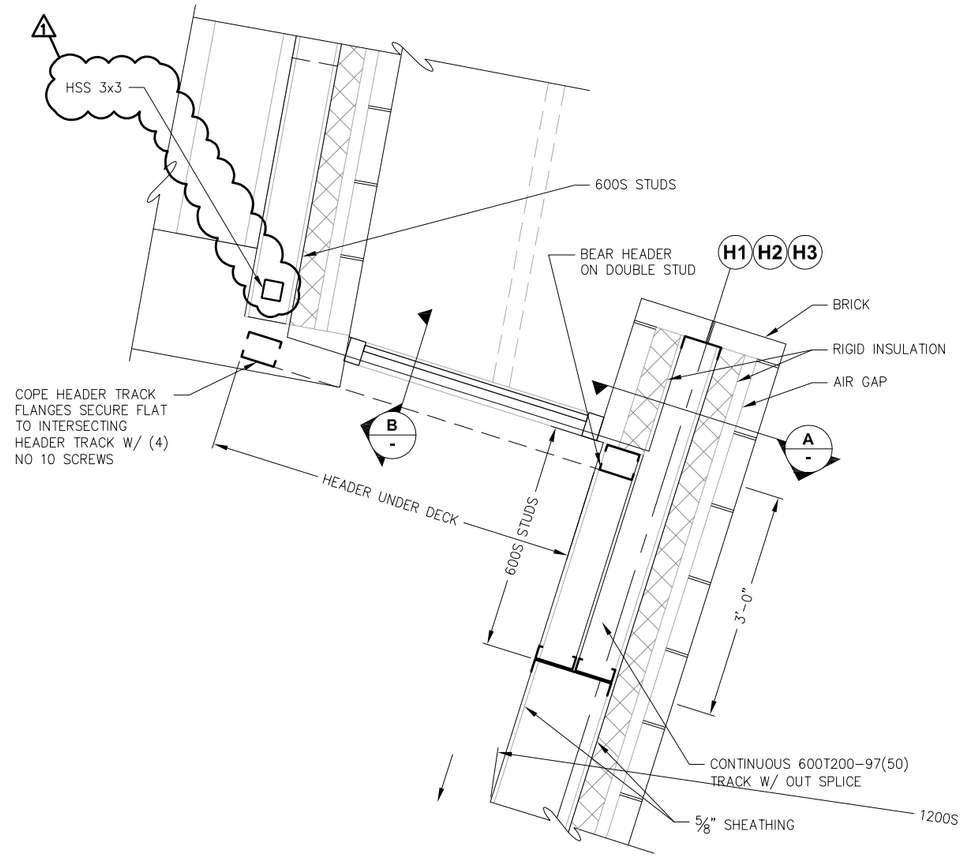

2 FIN WALL EAST WING DETAIL AT LOW ROOF

SCALE: 0 6" 1' 2'

PLAN NORTH

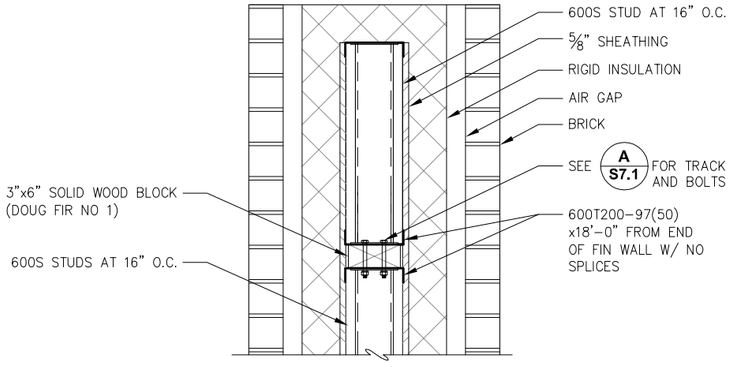

A FIN WALL DETAIL

SCALE: 0 6" 1' 2'

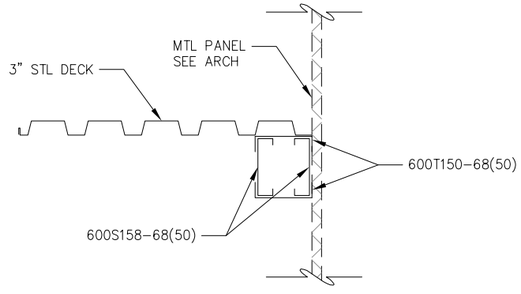

B SECTION LOW ROOF AT WINDOW AT FINISH WALL

SCALE: 0 6" 1' 2'

STATE OF ALASKA
Christopher Gianotti
CE-7559
REGISTERED PROFESSIONAL ENGINEER

NorthWind Architects LLC
126 Seward St
Juneau, AK 99801
Ph #907.586.6150
www.northwindarch.com

PND ENGINEERS, INC.
9360 Glacier Highway, Ste. 100
JUNEAU, ALASKA 99801
PND # 132062
PHONE (907) 586-2093
FAX (907) 586-2099

1" ACTUAL

IF THE ABOVE DIMENSION DOES NOT MEASURE ONE INCH (1") EXACTLY, THIS DRAWING WILL HAVE BEEN ENLARGED OR REDUCED, AFFECTING ALL LABELED SCALES.

MENDENHALL VALLEY PUBLIC LIBRARY

CBJ Contract # E14-051
Juneau, Alaska

SHEET TITLE:
SECTIONS AND DETAILS

REVISION:
1 ADDENDUM 01, 3/24/14
2 -
3 -
4 -

SHEET # S7.3

DATE: 03/03/2014

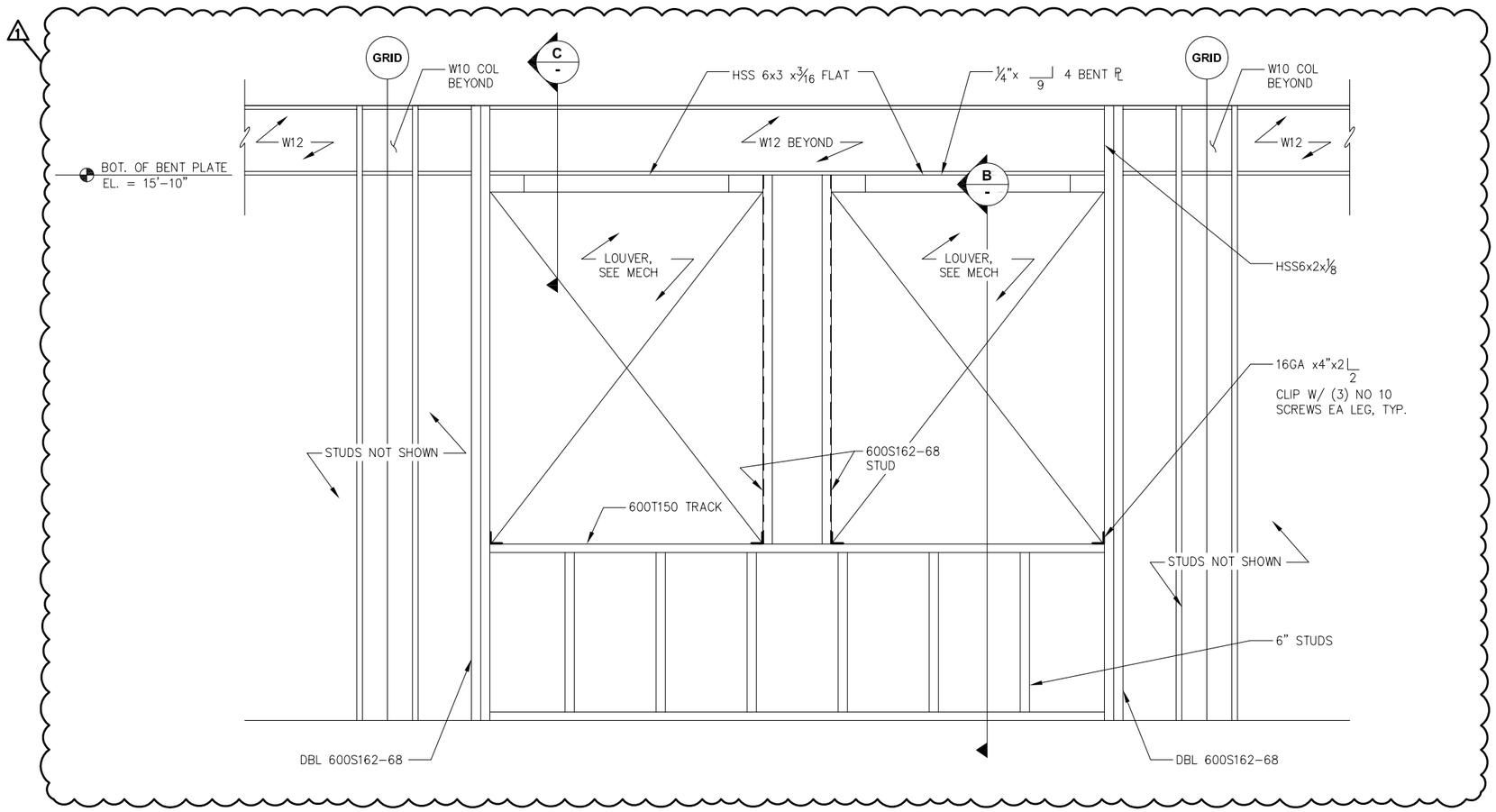

A TYPICAL AT LOWER FRAMING

SCALE: 0 6" 1' 2'

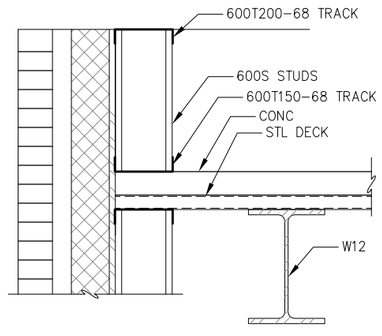

B SECTION AT LOUVER

SCALE: 0 6" 1' 2'

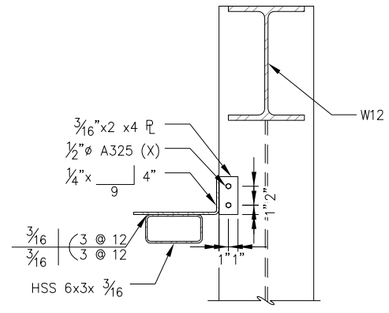

C LOWER HEADER SECTION

SCALE: 0 6" 1' 2'

STATE OF ALASKA
Christopher Gianotti
CE-7559
REGISTERED PROFESSIONAL ENGINEER

NorthWind Architects LLC
126 Seward St
Juneau, AK 99801
Ph #907.586.6150
www.northwindarch.com

PND ENGINEERS, INC.
9360 Glacier Highway, Ste. 100
JUNEAU, ALASKA 99801
PND # 132062
PHONE (907) 586-2093
FAX (907) 586-2099

1" ACTUAL

IF THE ABOVE DIMENSION DOES NOT MEASURE ONE INCH (1") EXACTLY, THIS DRAWING WILL HAVE BEEN ENLARGED OR REDUCED, AFFECTING ALL LABELED SCALES.

MENDENHALL VALLEY PUBLIC LIBRARY

CBJ Contract # E14-051
Juneau, Alaska

SHEET TITLE:
SECTIONS AND DETAILS

REVISION:
1 ADDENDUM 01, 3/24/14
2 -
3 -
4 -

SHEET # S7.6

DATE: 03/03/2014

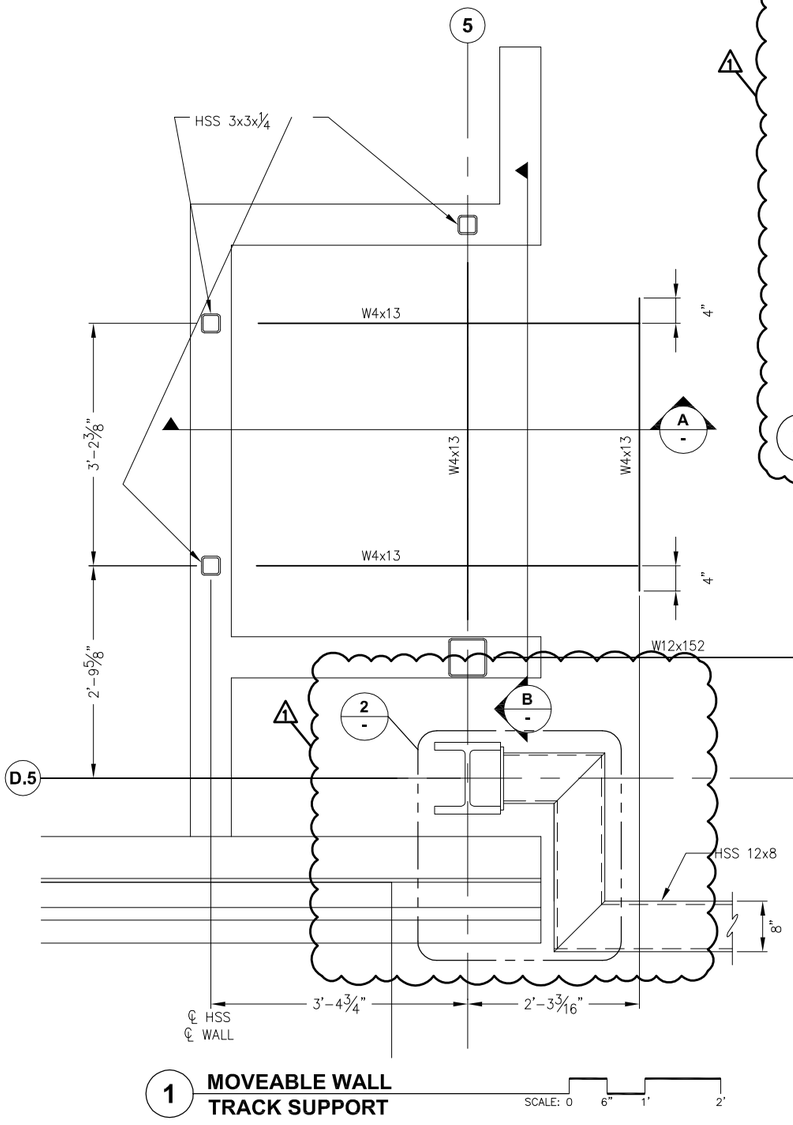

1 MOVEABLE WALL TRACK SUPPORT SCALE: 0 6" 1' 2'

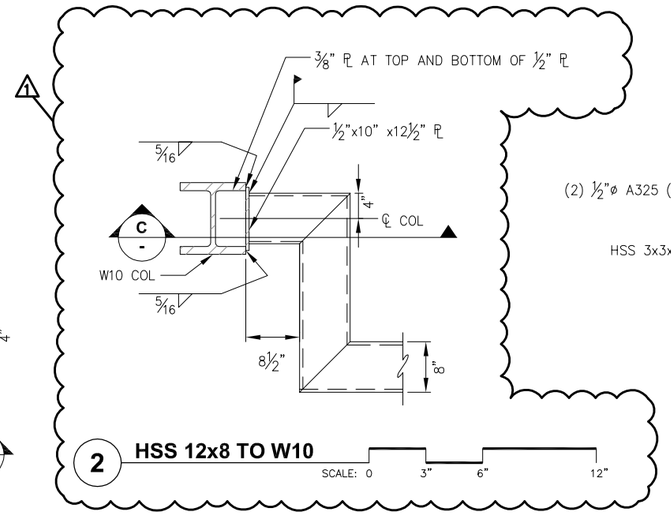

2 HSS 12x8 TO W10 SCALE: 0 3" 6" 12"

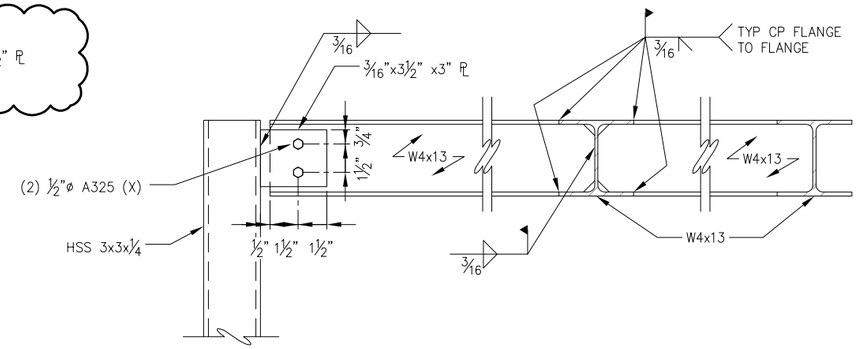

A MOVEABLE WALL SUPPORT BEAMS SECTION SCALE: 0 3" 6" 12"

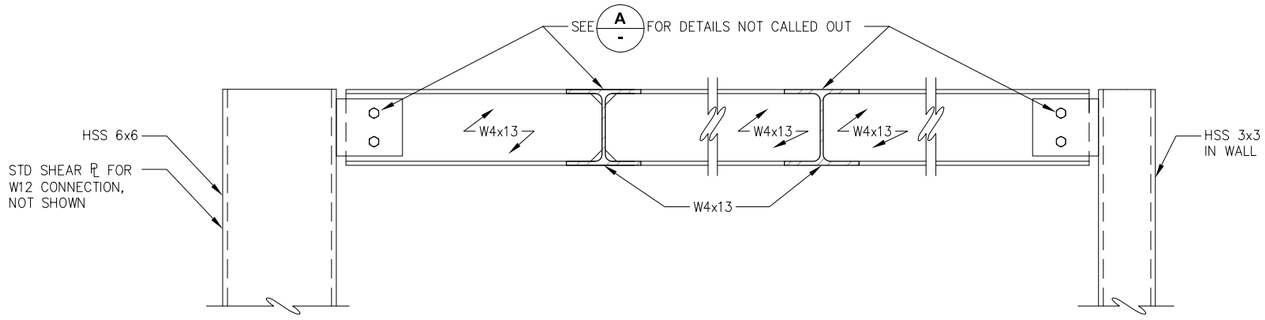

B MOVEABLE WALL SUPPORT SECTION SCALE: 0 3" 6" 12"

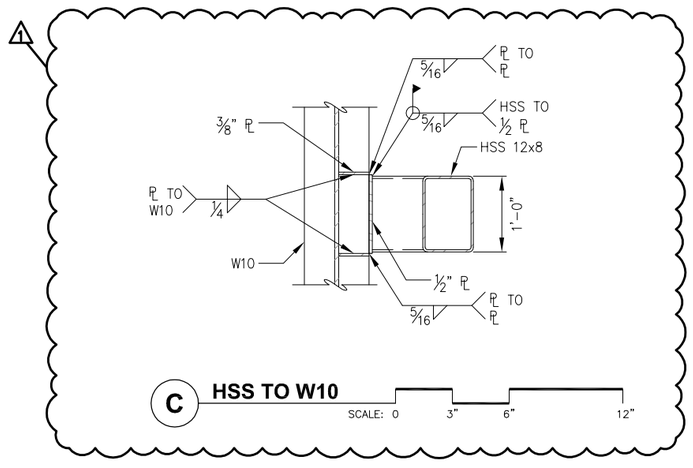

C HSS TO W10 SCALE: 0 3" 6" 12"

STATE OF ALASKA
Christopher Gianotti
CE-7559
REGISTERED PROFESSIONAL ENGINEER

NorthWind Architects LLC
126 Seward St
Juneau, AK 99801
Ph #907.586.6150
www.northwindarch.com

PND ENGINEERS, INC.
9360 Glacier Highway, Ste. 100
JUNEAU, ALASKA 99801
PND # 132062
PHONE (907) 586-2093
FAX (907) 586-2099

1" ACTUAL

IF THE ABOVE DIMENSION DOES NOT MEASURE ONE INCH (1") EXACTLY, THIS DRAWING WILL HAVE BEEN ENLARGED OR REDUCED, AFFECTING ALL LABELED SCALES.

MENDENHALL VALLEY PUBLIC LIBRARY

CBJ Contract # E14-051
Juneau, Alaska

SHEET TITLE:
SECTIONS AND DETAILS

REVISION:
1 ADDENDUM 01, 3/24/14
2 -
3 -
4 -

SHEET # S7.7

DATE: 03/03/2014

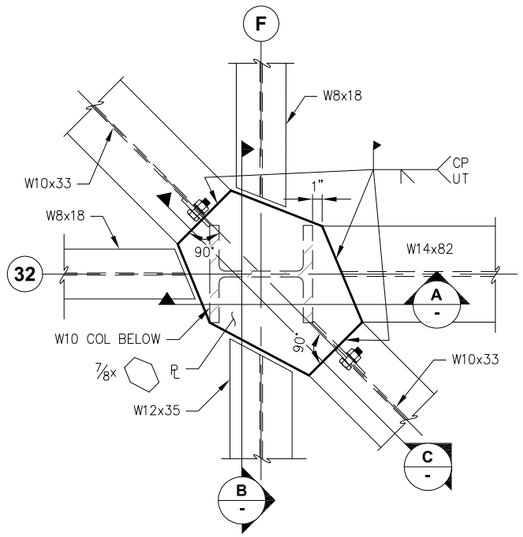

1 BEAM TO COLUMN CONNECTION DETAIL

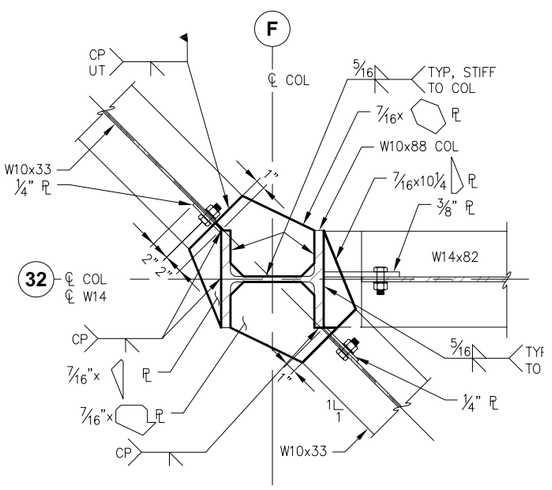

2 CONNECTION AT BOTTOM FLANGE W10

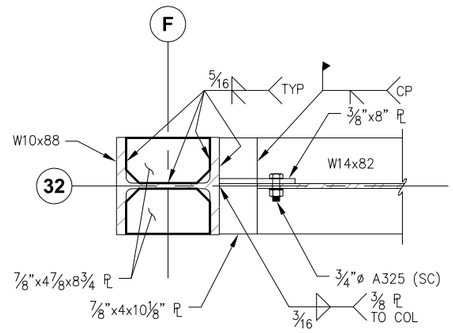

3 CONNECTION AT BOTTOM FLANGE W14

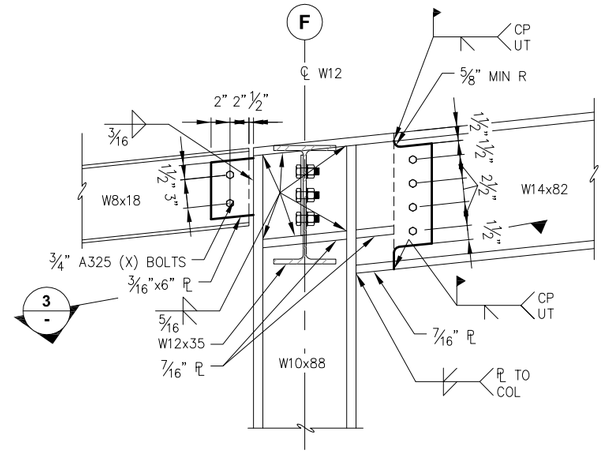

A SECTION

B BEAM TO COLUMN CONNECTION

C W10 BEAM TO W10 COLUMN

4 BEAM TO COLUMN CONNECTION TOP FLANGE

5 BEAM TO COLUMN CONNECTION BOTTOM FLANGE

D BEAM TO COLUMN SECTION AT G32

E BEAM TO COLUMN

F BEAM TO COLUMN CONNECTION

G BEAM TO BEAM CONNECTION

STATE OF ALASKA
Christopher Gianotti
CE-7559
REGISTERED PROFESSIONAL ENGINEER

NorthWind Architects LLC
126 Seward St
Juneau, AK 99801
Ph #907.586.6150
www.northwindarch.com

PND ENGINEERS, INC.
9360 Glacier Highway, Ste. 100
JUNEAU, ALASKA 99801
PND # 132062
PHONE (907) 586-2093
FAX (907) 586-2099

1" ACTUAL

IF THE ABOVE DIMENSION DOES NOT MEASURE ONE INCH (1") EXACTLY, THIS DRAWING WILL HAVE BEEN ENLARGED OR REDUCED, AFFECTING ALL LABELED SCALES.

MENDENHALL VALLEY PUBLIC LIBRARY

CBJ Contract # E14-051
Juneau, Alaska

SHEET TITLE:
SECTIONS AND DETAILS

REVISION:
1 ADDENDUM 01, 3/24/14
2 -
3 -
4 -

SHEET #
S8.5

DATE: 03/03/2014

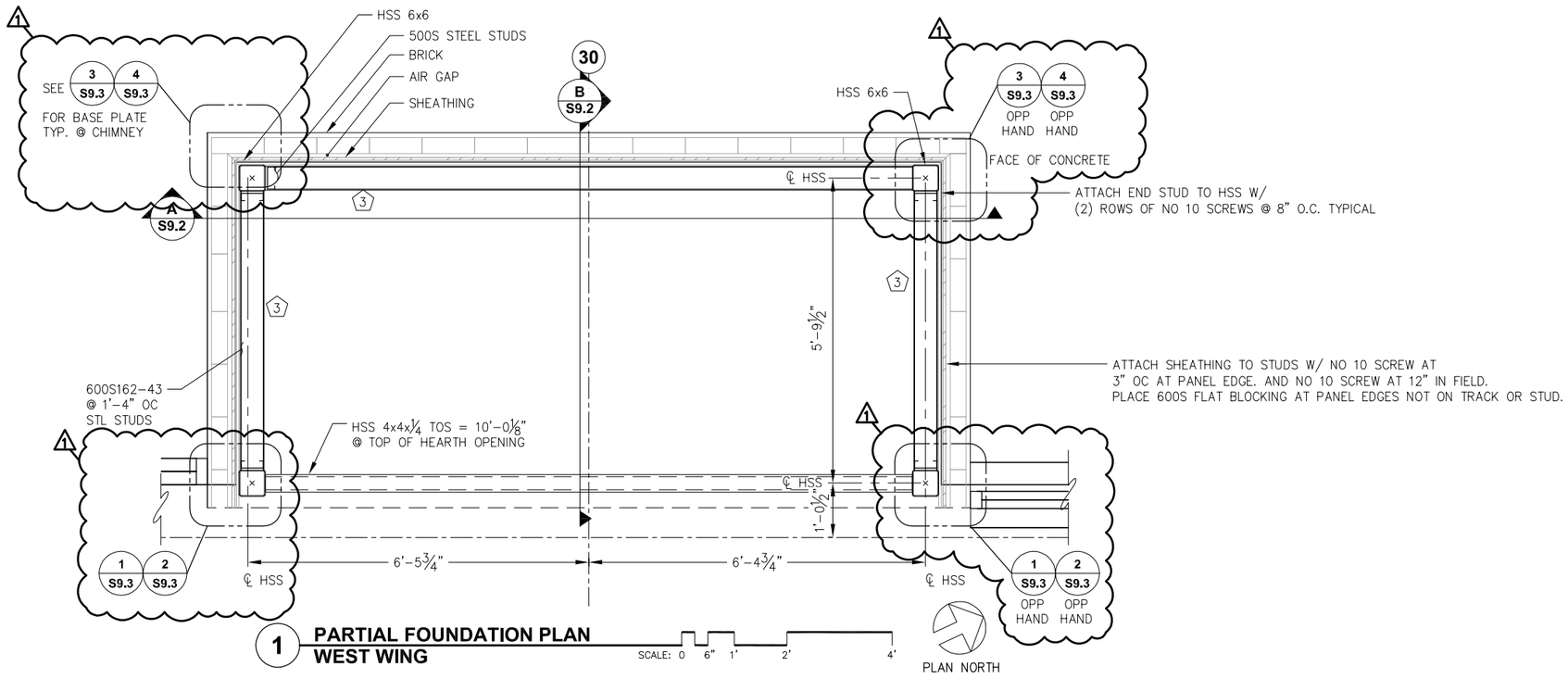

1 PARTIAL FOUNDATION PLAN
WEST WING

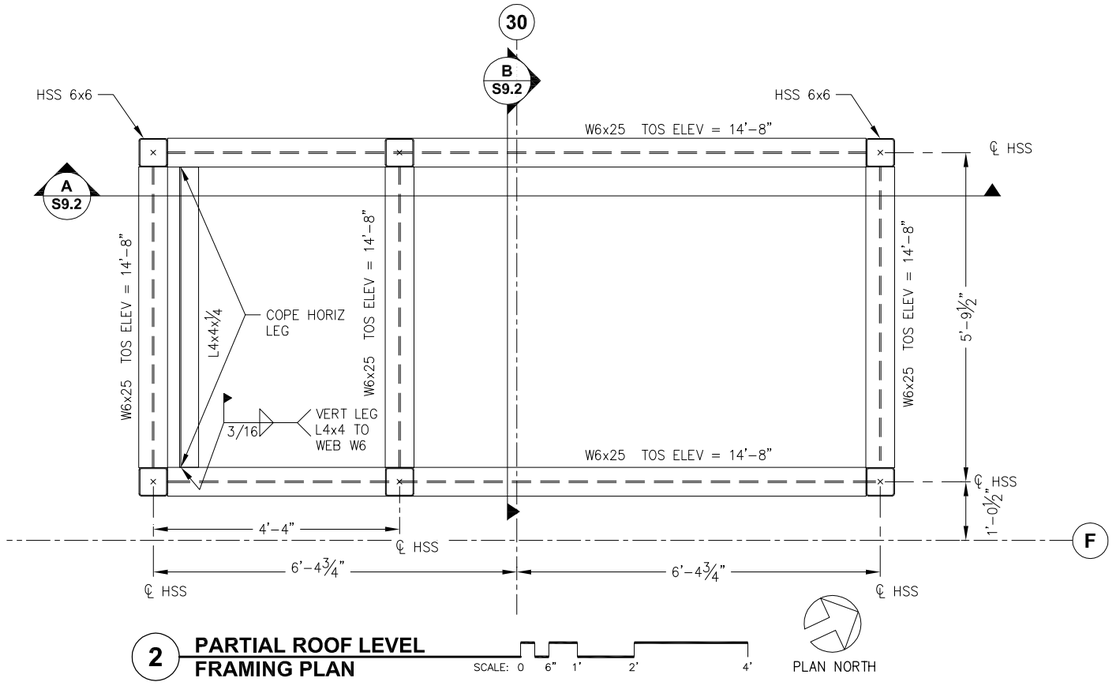

2 PARTIAL ROOF LEVEL FRAMING PLAN

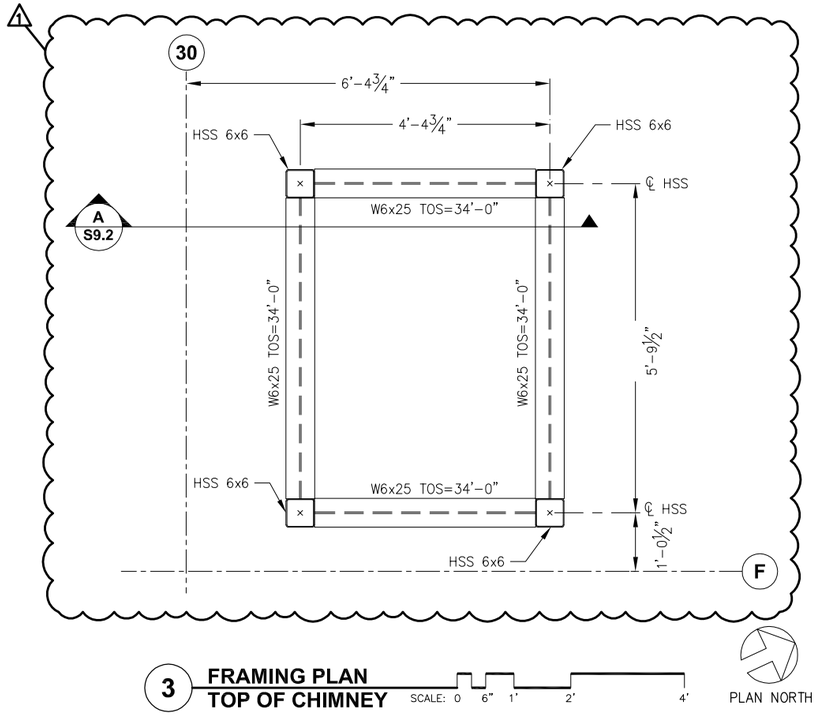

3 FRAMING PLAN TOP OF CHIMNEY

STATE OF ALASKA
Christopher Gianotti
CE-7559
REGISTERED PROFESSIONAL ENGINEER

NorthWind Architects LLC
126 Seward St
Juneau, AK 99801
Ph #907.586.6150
www.northwindarch.com

PND ENGINEERS, INC.
9360 Glacier Highway, Ste. 100
JUNEAU, ALASKA 99801
PND # 132062
PHONE (907) 586-2093
FAX (907) 586-2099

1" ACTUAL

IF THE ABOVE DIMENSION DOES NOT MEASURE ONE INCH (1") EXACTLY, THIS DRAWING WILL HAVE BEEN ENLARGED OR REDUCED, AFFECTING ALL LABELED SCALES.

MENDENHALL VALLEY PUBLIC LIBRARY

CBJ Contract # E14-051
Juneau, Alaska

SHEET TITLE:
CHIMNEY FRAMING PLANS

REVISION:
1 ADDENDUM 01, 3/24/14
2 -
3 -
4 -

SHEET # S9.1

DATE: 03/03/2014

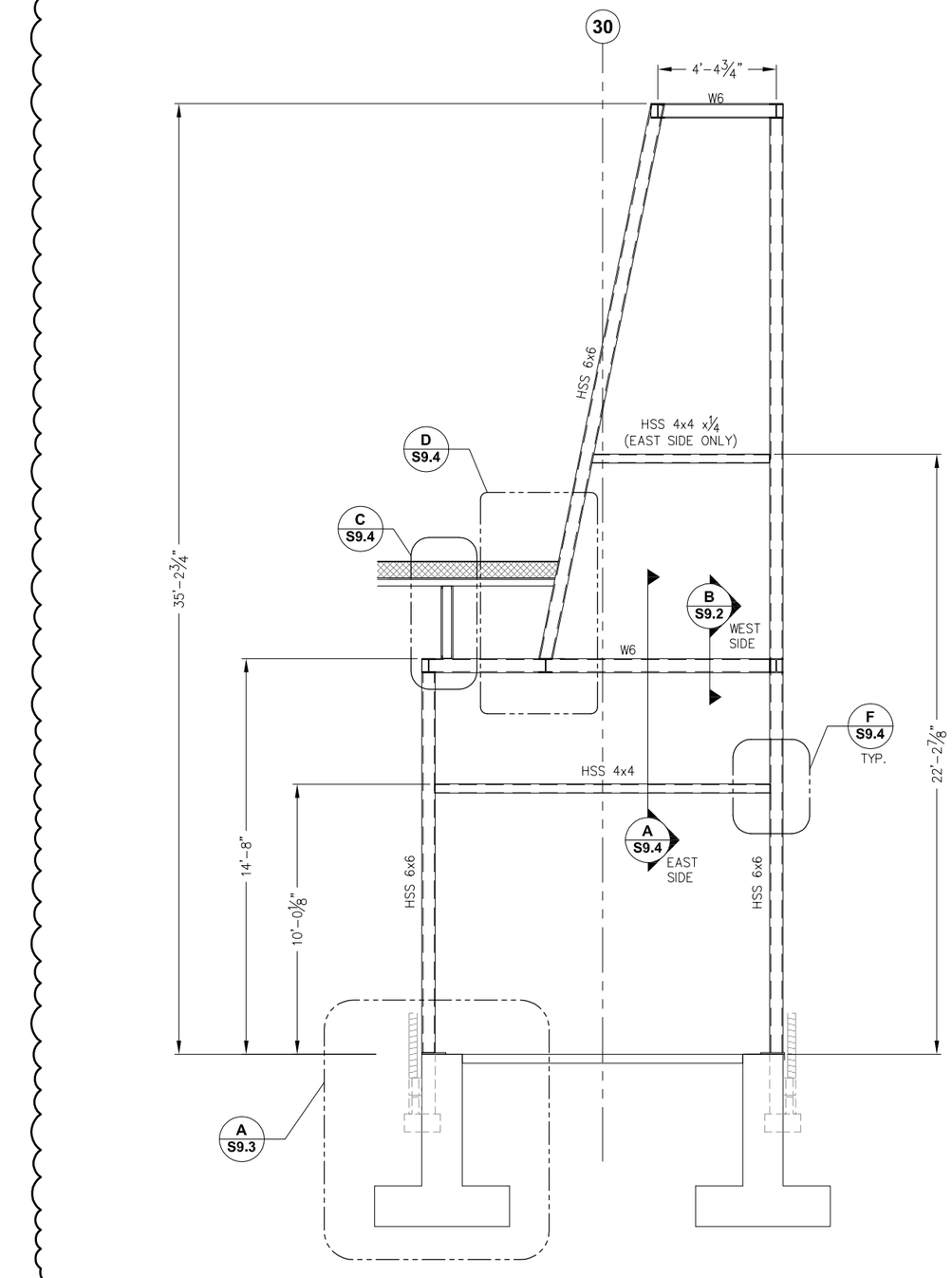

A **CHIMNEY FRAMING ELEVATION**

SCALE: 0 1' 2' 4'

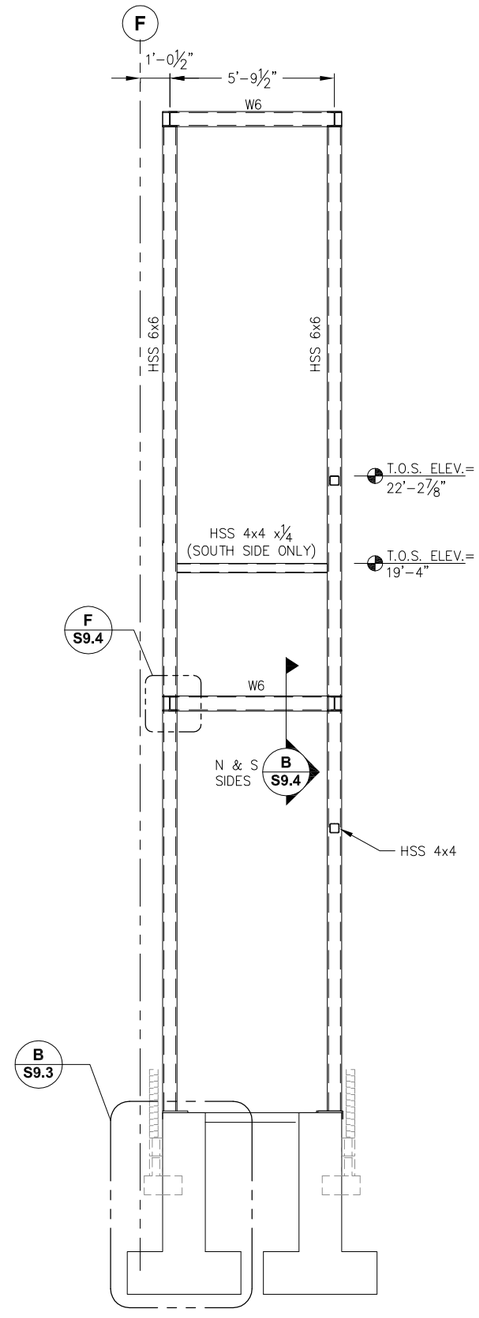

B **CHIMNEY FRAMING SECTION**

SCALE: 0 1' 2' 4'

STATE OF ALASKA
Christopher Gianotti
CE-7559
REGISTERED PROFESSIONAL ENGINEER

NorthWind Architects LLC
126 Seward St
Juneau, AK 99801
Ph #907.586.6150
www.northwindarch.com

PND ENGINEERS, INC.
9360 Glacier Highway, Ste. 100
JUNEAU, ALASKA 99801
PND # 132062
PHONE (907) 586-2093
FAX (907) 586-2099

1" ACTUAL

IF THE ABOVE DIMENSION DOES NOT MEASURE ONE INCH (1") EXACTLY, THIS DRAWING WILL HAVE BEEN ENLARGED OR REDUCED, AFFECTING ALL LABELED SCALES.

MENDENHALL VALLEY PUBLIC LIBRARY

CBJ Contract # E14-051

Juneau, Alaska

SHEET TITLE:
CHIMNEY SECTIONS

REVISION:
1 ADDENDUM 01, 3/24/14
2 -
3 -
4 -

SHEET # S9.2

DATE: 03/03/2014

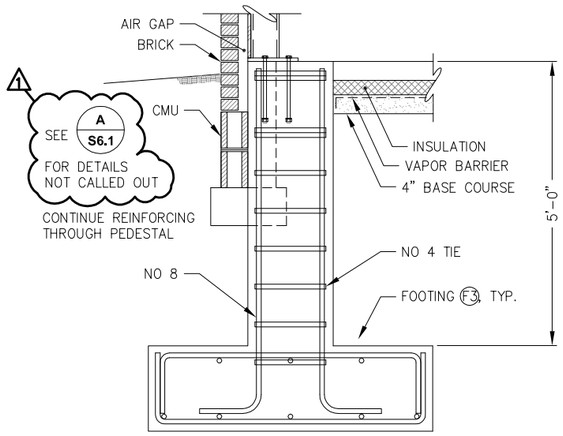

A CHIMNEY COLUMN PEDESTAL AND FOOTING

SCALE: 0 6" 1' 2' 4'

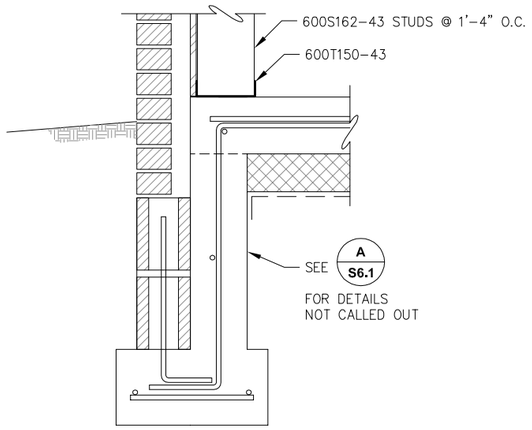

B CHIMNEY WALL FOOTING

SCALE: 0 6" 1' 2'

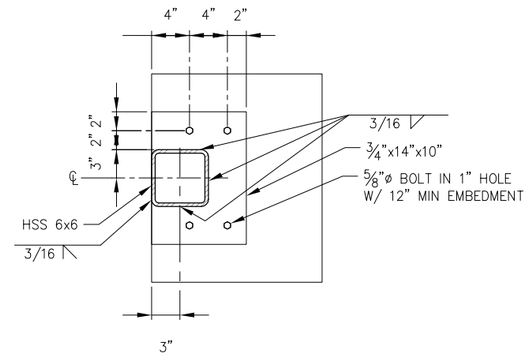

1 CHIMNEY COLUMN INSIDE CORNER BASE PLATE

SCALE: 0 6" 1' 2'

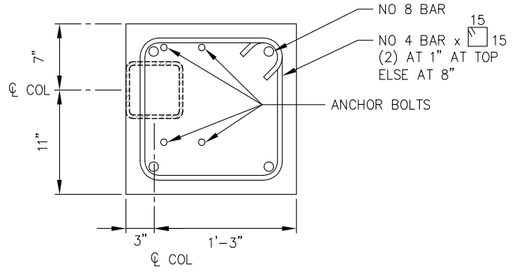

2 CHIMNEY COLUMN INSIDE CORNER PEDESTAL

SCALE: 0 6" 1' 2'

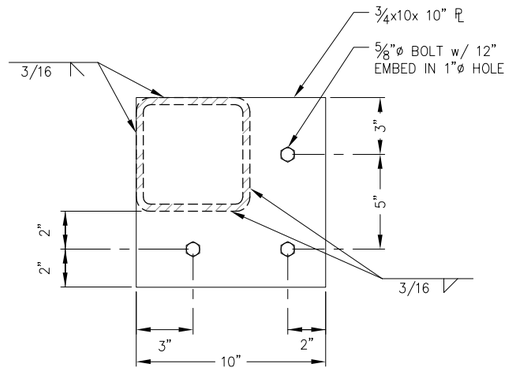

3 OUTSIDE CORNER COLUMN BASE PLATE CHIMNEY COLUMN

SCALE: 0 3" 6" 12"

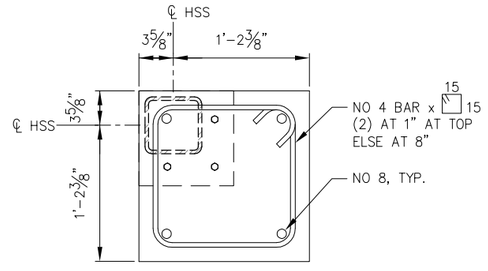

4 CHIMNEY COLUMN OUTSIDE CORNER PEDESTAL

SCALE: 0 6" 1' 2'

STATE OF ALASKA
Christopher Gianotti
CE-7559
REGISTERED PROFESSIONAL ENGINEER

NorthWind Architects LLC
126 Seward St
Juneau, AK 99801
Ph #907.586.6150
www.northwindarch.com

PND ENGINEERS, INC.
9360 Glacier Highway, Ste. 100
JUNEAU, ALASKA 99801
PND # 132062
PHONE (907) 586-2093
FAX (907) 586-2099

1" ACTUAL

IF THE ABOVE DIMENSION DOES NOT MEASURE ONE INCH (1") EXACTLY, THIS DRAWING WILL HAVE BEEN ENLARGED OR REDUCED, AFFECTING ALL LABELED SCALES.

MENDENHALL VALLEY PUBLIC LIBRARY

CBJ Contract # E14-051

Juneau, Alaska

SHEET TITLE:
CHIMNEY DETAILS

REVISION:
1 ADDENDUM 01, 3/24/14
2 -
3 -
4 -

SHEET # S9.3

DATE: 03/03/2014

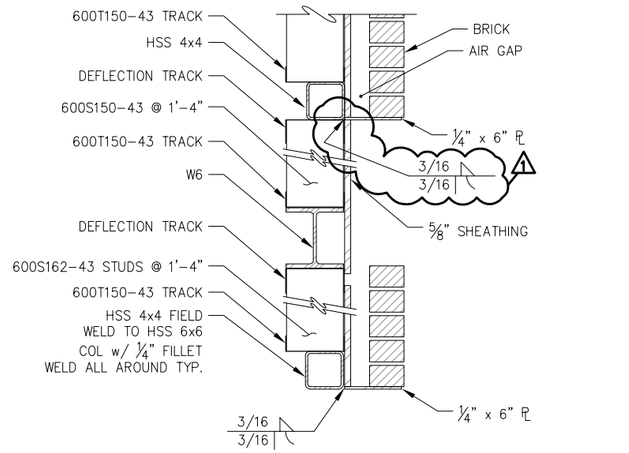

A SECTION
SCALE: 0 6" 1' 2'

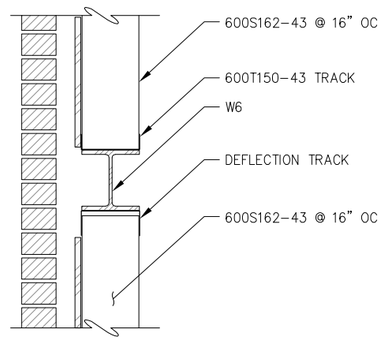

B SECTION
SCALE: 0 6" 1' 2'

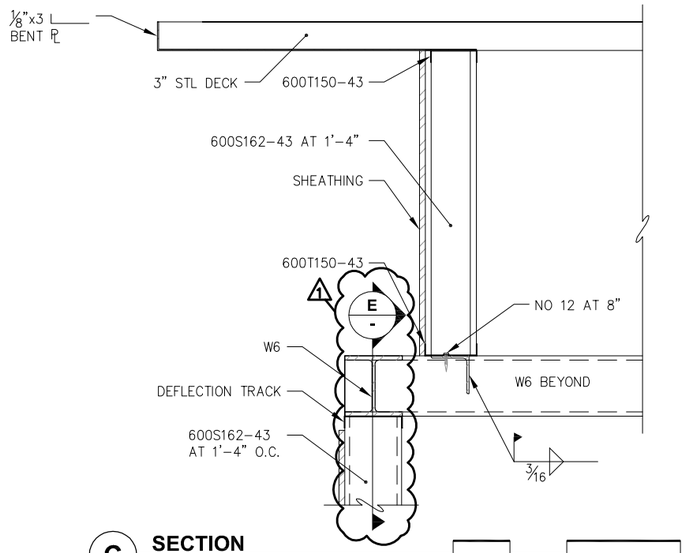

C SECTION
SCALE: 0 6" 1' 2'

D SECTION
SCALE: 0 6" 1' 2'

E TYPICAL BEAM TO BEAM AT CHIMNEY STRUCTURE
SCALE: 0 3" 6"

F COLUMN - BM CONNECTION AT CHIMNEY
SCALE: 0 3" 6" 12"

STATE OF ALASKA
Christopher Gianotti
CE-7559
REGISTERED PROFESSIONAL ENGINEER

NorthWind Architects LLC
126 Seward St
Juneau, AK 99801
Ph #907.586.6150
www.northwindarch.com

PND ENGINEERS, INC.
9360 Glacier Highway, Ste. 100
JUNEAU, ALASKA 99801
PND # 132062
PHONE (907) 586-2093
FAX (907) 586-2099

1" ACTUAL

IF THE ABOVE DIMENSION DOES NOT MEASURE ONE INCH (1") EXACTLY, THIS DRAWING WILL HAVE BEEN ENLARGED OR REDUCED, AFFECTING ALL LABELED SCALES.

MENDENHALL VALLEY PUBLIC LIBRARY

CBJ Contract # E14-051
Juneau, Alaska

SHEET TITLE:
CHIMNEY DETAILS

REVISION:
1 ADDENDUM 01, 3/24/14
2 -
3 -
4 -

SHEET # S9.4

DATE: 03/03/2014