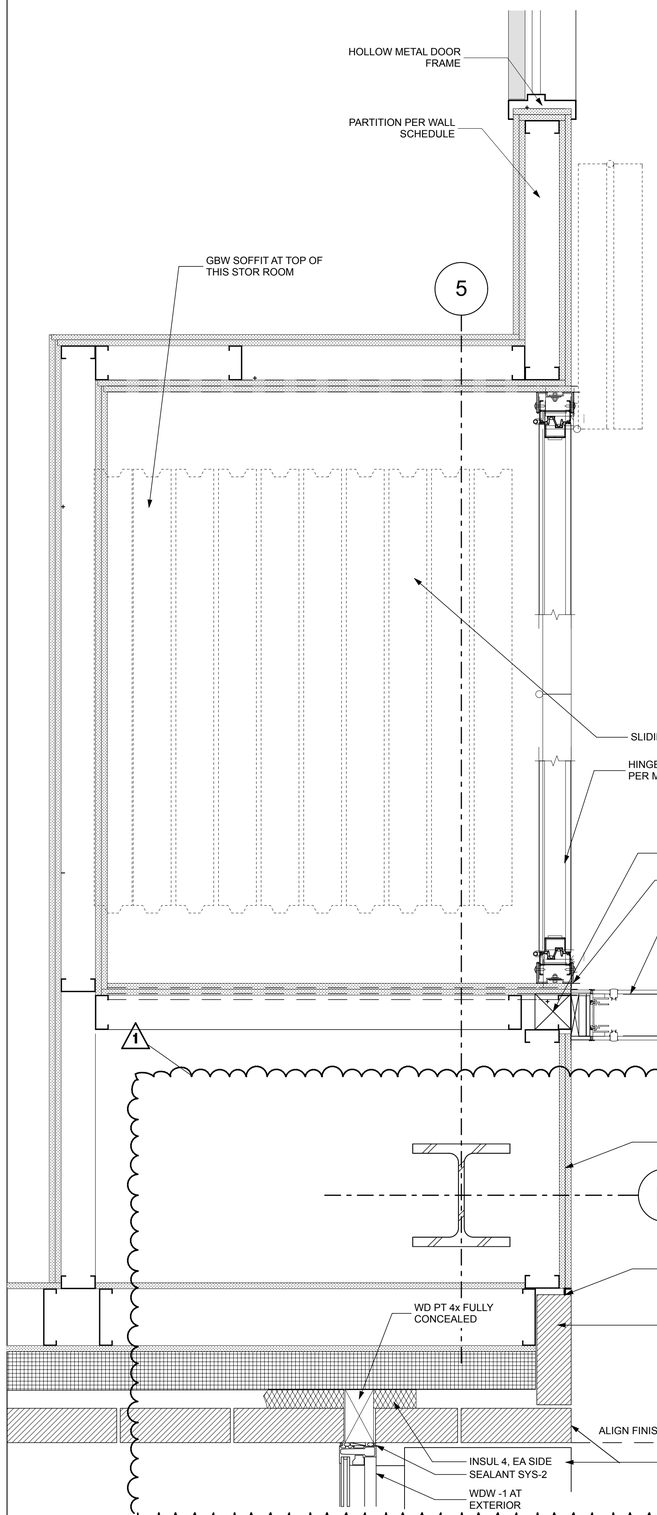

3D PLAN DETAIL - SLIDING GLASS DOOR
SCALE: 1 1/2"= 1'-0"

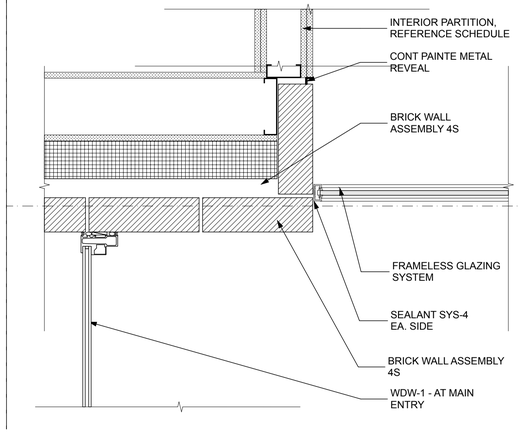

1C PLAN DETAIL UPPER INT WALLS
SCALE: 1 1/2"= 1'-0"

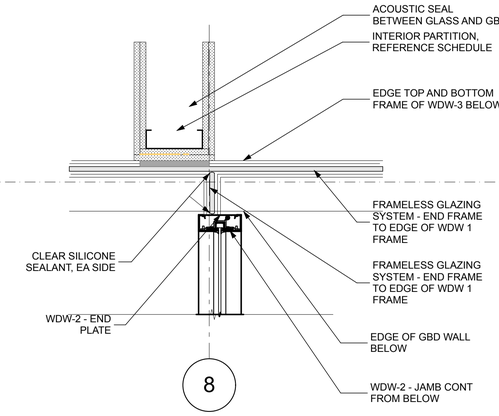

1B PLAN DETAIL UPPER INT WALLS
SCALE: 1 1/2"= 1'-0"

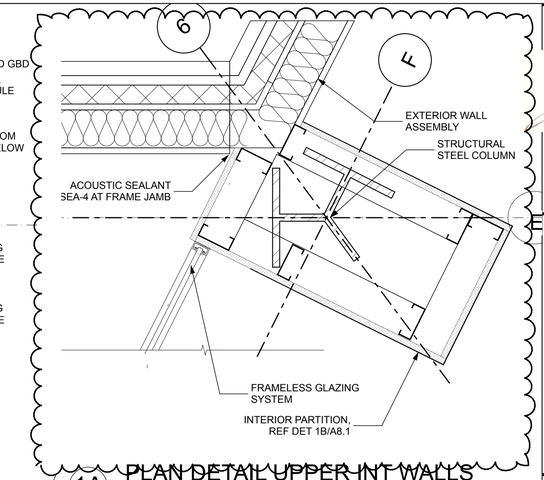

1A PLAN DETAIL UPPER INT WALLS
SCALE: 1 1/2"= 1'-0"

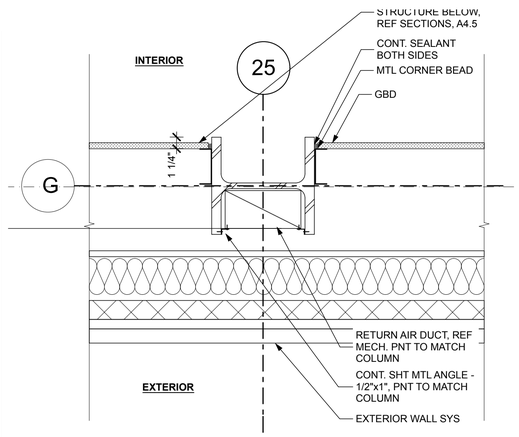

2B PLAN DETAIL UPPER INT WALLS
SCALE: 1 1/2"= 1'-0"

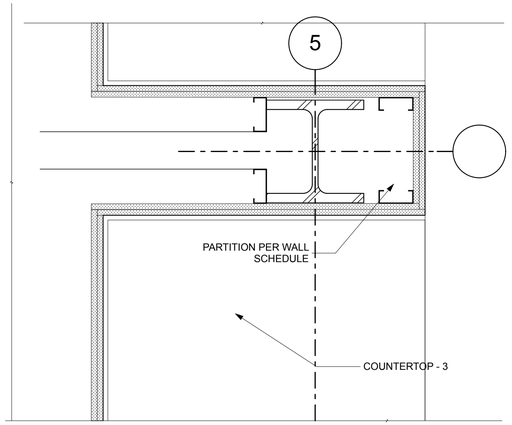

2A PLAN DETAIL
SCALE: 1 1/2"= 1'-0"

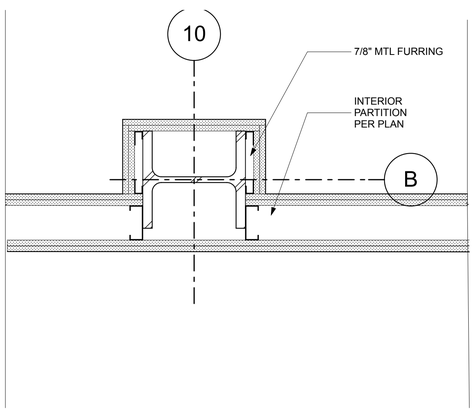

3B PLAN DETAIL
SCALE: 1 1/2"= 1'-0"

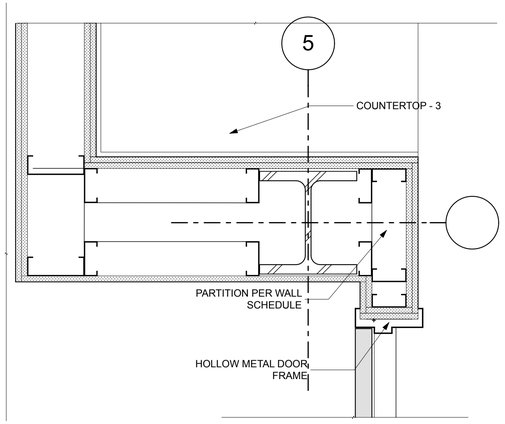

3A PLAN DETAIL
SCALE: 1 1/2"= 1'-0"

STATE OF ALASKA
49 TH
JAMES F.S. BIBB
A-9949
REGISTERED PROFESSIONAL ARCHITECT
3/3/14
100% CONSTRUCTION DOCUMENTS

NorthWind Architects LLC
126 Seward St
Juneau, AK 99801
Ph #907.586.6150
www.northwindarch.com

THA
ARCHITECTURE

1" ACTUAL

IF THE ABOVE DIMENSION DOES NOT MEASURE ONE INCH (1") EXACTLY, THIS DRAWING WILL HAVE BEEN ENLARGED OR REDUCED, AFFECTING ALL LABELED SCALES.

MENDENHALL VALLEY PUBLIC LIBRARY

CBJ Contract # E14-051
Juneau, Alaska

SHEET TITLE:
PLAN DETAILS

REVISION:
1 ADDENDUM 04, 3/24/14
2 -
3 -
4 -

SHEET # A8.2
DATE: 03/03/2014

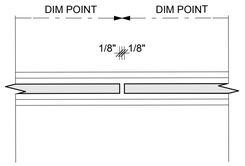

1D PLAN DETAIL - ALL-GLASS SYSTEM
SCALE: 3" = 1'-0"

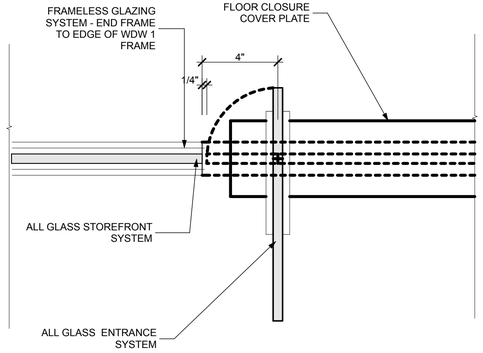

1C PLAN DETAIL - ALL-GLASS DOOR JAMB
SCALE: 3" = 1'-0"

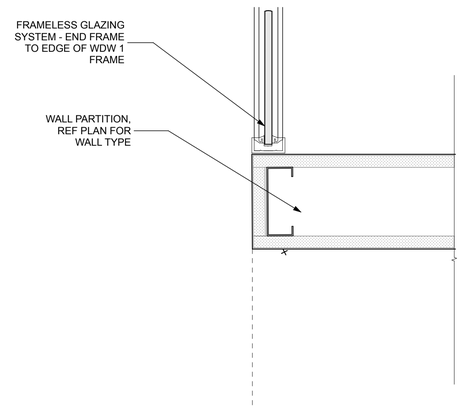

1B PLAN DETAIL - ALL-GLASS SYSTEM
SCALE: 3" = 1'-0"

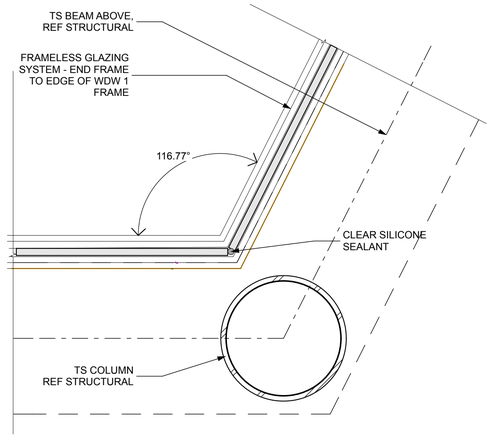

1A PLAN DETAIL - ALL-GLASS SYSTEM
SCALE: 3" = 1'-0"

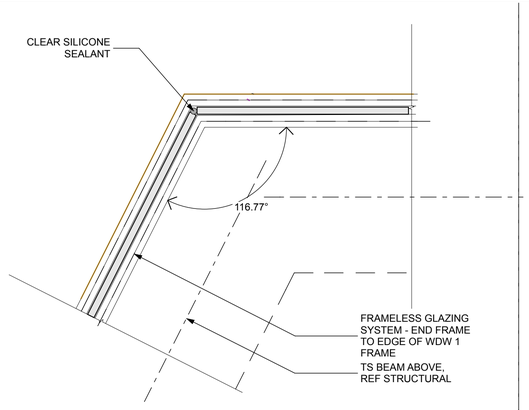

2D PLAN DETAIL - ALL-GLASS SYSTEM
SCALE: 3" = 1'-0"

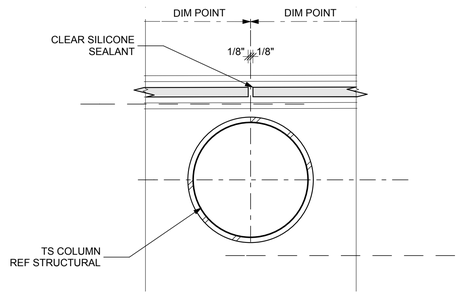

2C PLAN DETAIL - ALL-GLASS SYSTEM
SCALE: 3" = 1'-0"

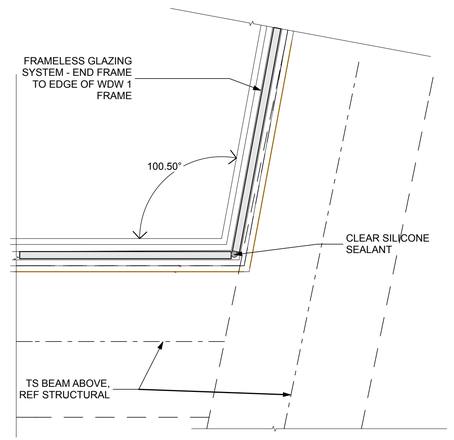

2B PLAN DETAIL - ALL-GLASS SYSTEM
SCALE: 3" = 1'-0"

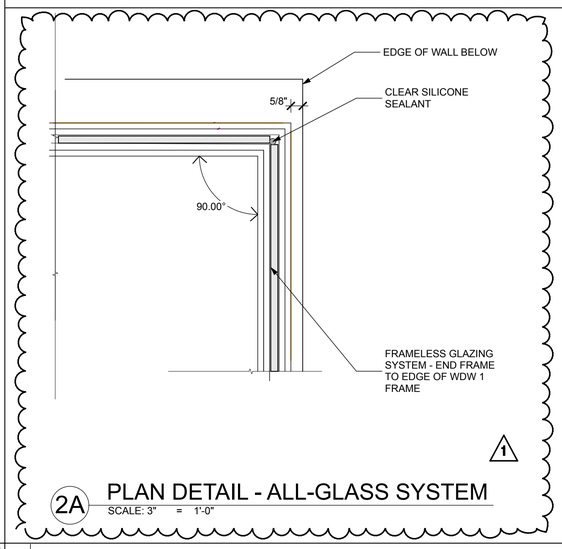

2A PLAN DETAIL - ALL-GLASS SYSTEM
SCALE: 3" = 1'-0"

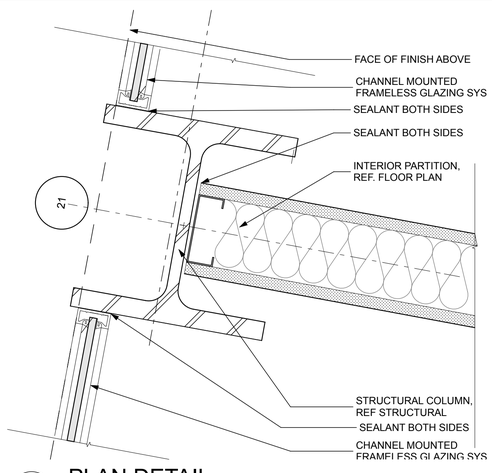

3D PLAN DETAIL
SCALE: 3" = 1'-0"

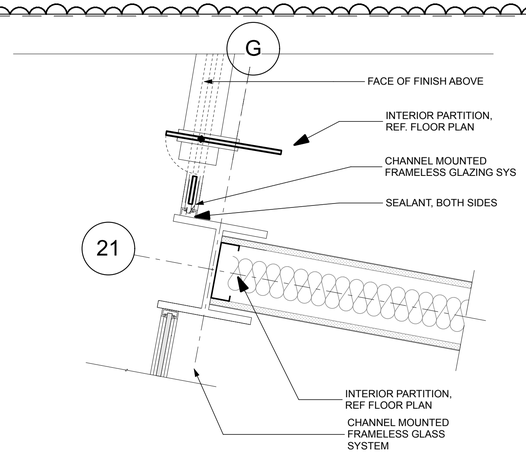

3C PLAN DETAIL (1)
SCALE: 1 1/2"= 1'-0"

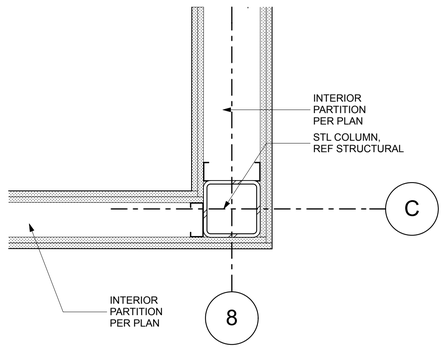

3B PLAN DETAIL
SCALE: 1 1/2"= 1'-0"
1

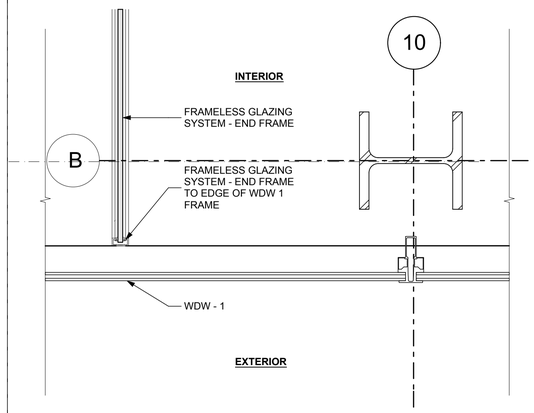

3A PLAN DETAIL
SCALE: 1 1/2"= 1'-0"

STATE OF ALASKA
49 TH
JAMES F.S. BIBB
A-9949
REGISTERED PROFESSIONAL ARCHITECT
3/3/14

100% CONSTRUCTION DOCUMENTS

NorthWind Architects LLC
126 Seward St
Juneau, AK 99801
Ph #907.586.6150
www.northwindarch.com

THA
ARCHITECTURE

1" ACTUAL

IF THE ABOVE DIMENSION DOES NOT MEASURE ONE INCH (1") EXACTLY, THIS DRAWING WILL HAVE BEEN ENLARGED OR REDUCED, AFFECTING ALL LABELED SCALES.

MENDENHALL VALLEY PUBLIC LIBRARY

CBJ Contract # E14-051
Juneau, Alaska

SHEET TITLE:
PLAN DETAILS

REVISION:
1 ADDENDUM 04, 3/24/14
2 -
3 -
4 -

SHEET # A8.3
DATE: 03/03/2014

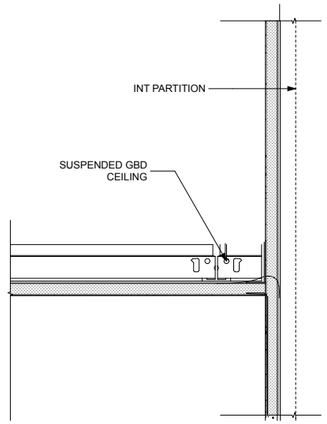

1D SECTION DETAIL AT GBD CEILING
SCALE: 3" = 1'-0"

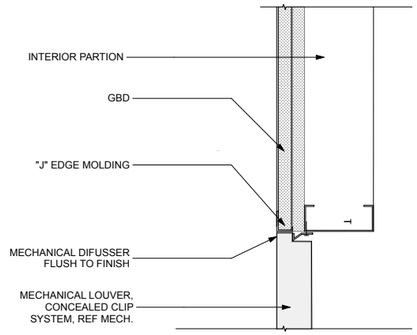

1C MECH DIFUSSER AT GBD
SCALE: 3" = 1'-0"

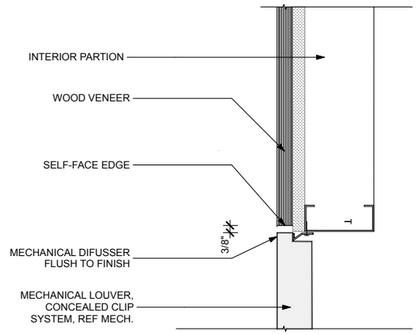

1B MECH DIFUSSER AT WD VENEER PANEL
SCALE: 3" = 1'-0"

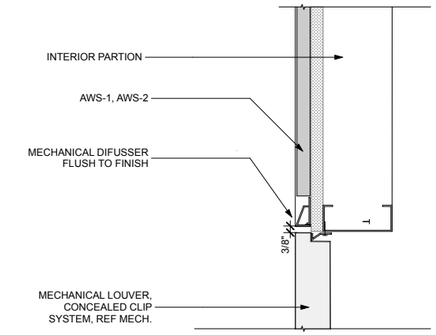

1A MECH DIFUSSER AT AWS PANEL
SCALE: 3" = 1'-0"

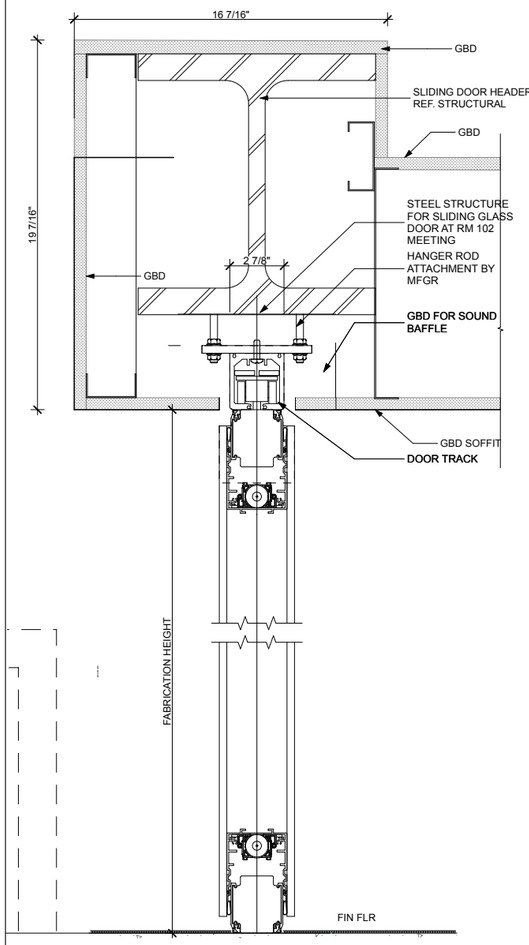

3D SECTION AT SLIDING DOOR HDR
SCALE: 3" = 1'-0"

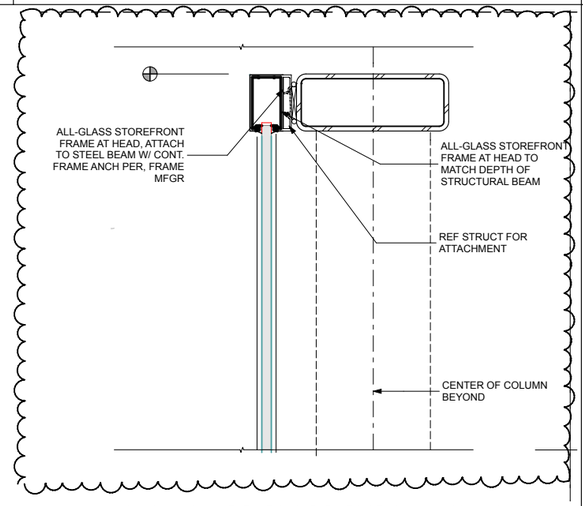

2C FRAMELESS GLASS SYS HED AT RM 116
SCALE: 3" = 1'-0"

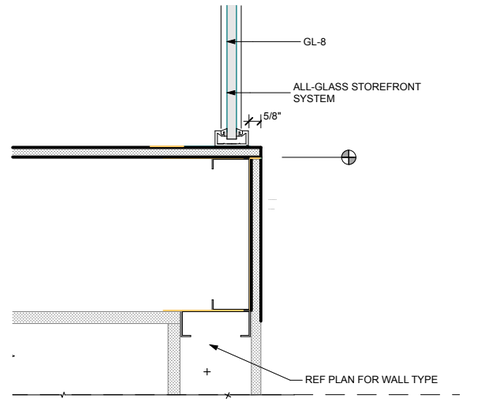

2B FRAMELESS GLASS SYSTEM AT UPPER SILL
SCALE: 3" = 1'-0"

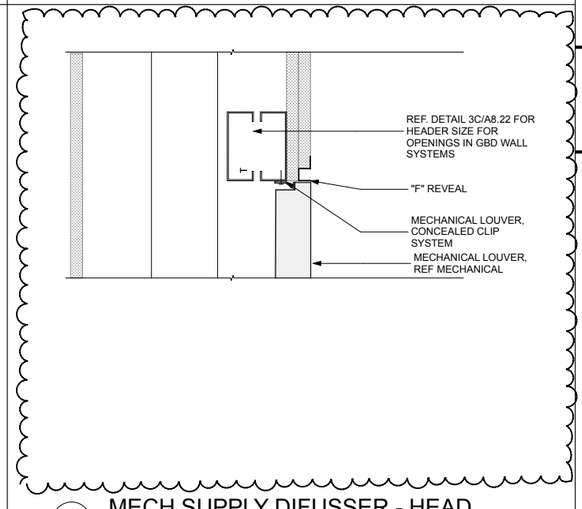

2A MECH SUPPLY DIFUSSER - HEAD
SCALE: 3" = 1'-0"

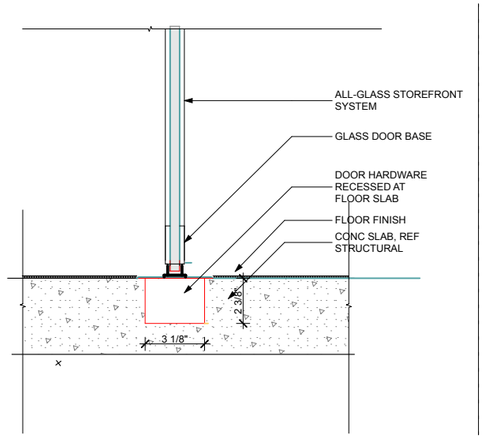

3C FRAMELESS GLASS SYSTEM THRESHOLD
SCALE: 3" = 1'-0"

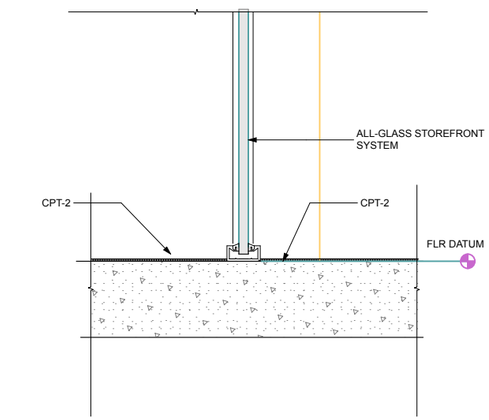

3B FRAMELESS GLASS SYSTEM AT SILL
SCALE: 3" = 1'-0"

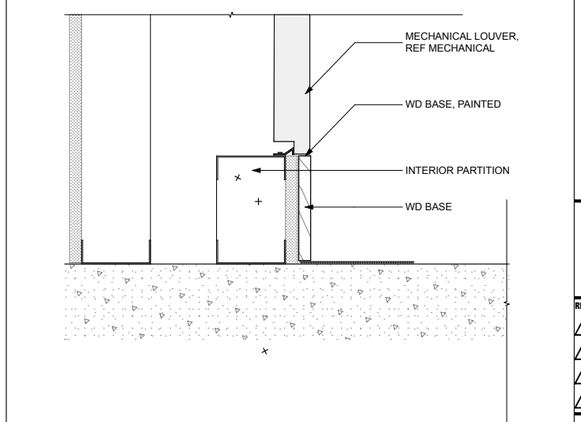

3A MECH SUPPLY DIFUSSER - SILL
SCALE: 3" = 1'-0"

STATE OF ALASKA
49 TH
JAMES F.S. BIBB
A-9949
REGISTERED PROFESSIONAL ARCHITECT
3/3/14

100% CONSTRUCTION DOCUMENTS

NorthWind Architects LLC
126 Seward St
Juneau, AK 99801
Ph #907.586.6150
www.northwindarch.com

THA
ARCHITECTURE

1" ACTUAL

IF THE ABOVE DIMENSION DOES NOT MEASURE ONE INCH (1") EXACTLY, THIS DRAWING WILL HAVE BEEN ENLARGED OR REDUCED, AFFECTING ALL LABELED SCALES.

MENDENHALL VALLEY PUBLIC LIBRARY

CBJ Contract # E14-051
Juneau, Alaska

SHEET TITLE:
SECTION DETAILS

REVISION:
1 ADDENDUM 04, 3/24/14
2 -
3 -
4 -

SHEET # A8.5
DATE: 03/03/2014

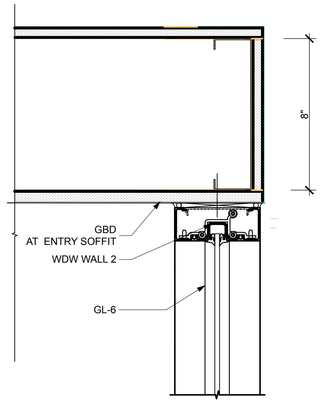

1D SECTION DETAIL - HEAD AT SOFFIT
SCALE: 3" = 1'-0"

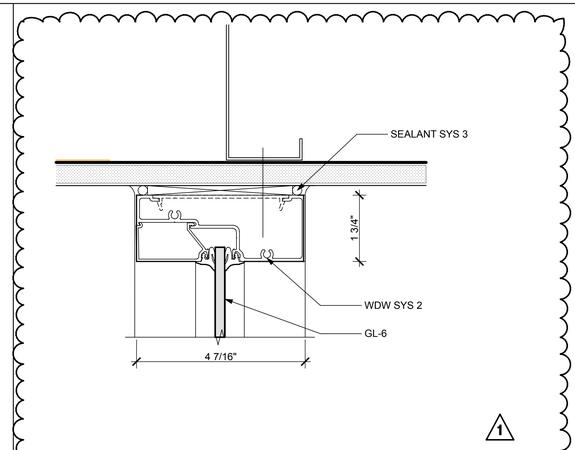

1C WDW - 2 SECTION AT HEAD / JAMB SIM
SCALE: 6" = 1'-0"

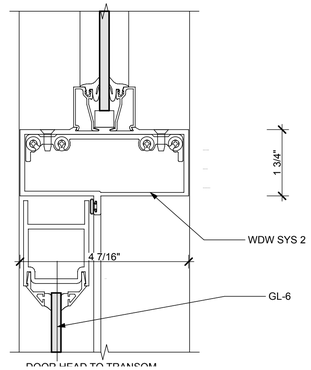

1B WDW-2 SECTION AT TRANSOM/JAMB SIM
SCALE: 6" = 1'-0"

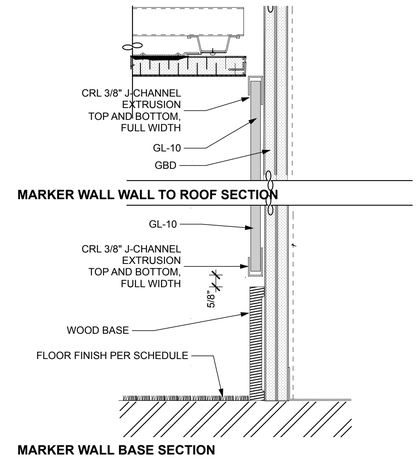

1A SECTION DETAIL AT MB-1 WALL
SCALE: 3" = 1'-0"

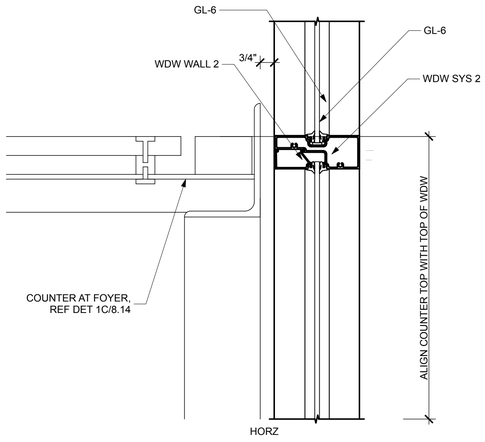

2D CASEWORK DETAIL
SCALE: 3" = 1'-0"

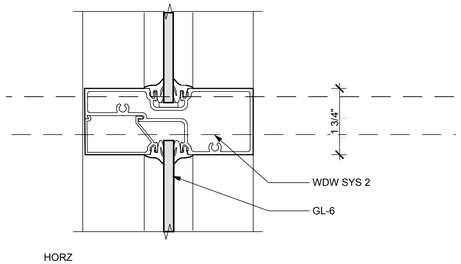

2C WDW-2 SECTION AT HORZ MULLION
SCALE: 6" = 1'-0"

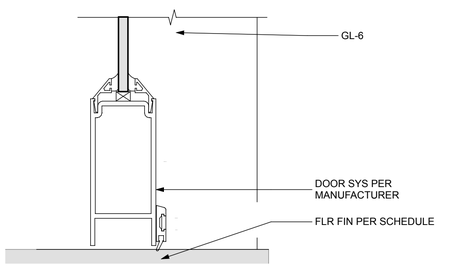

2B WDW-2 SECTION AT DOOR THRESHOLD
SCALE: 6" = 1'-0"

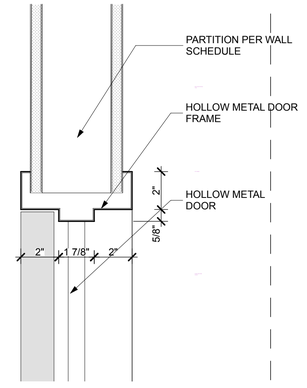

2A INT HOLLOW METAL DOOR HEAD/JAMB
SCALE: 3" = 1'-0"

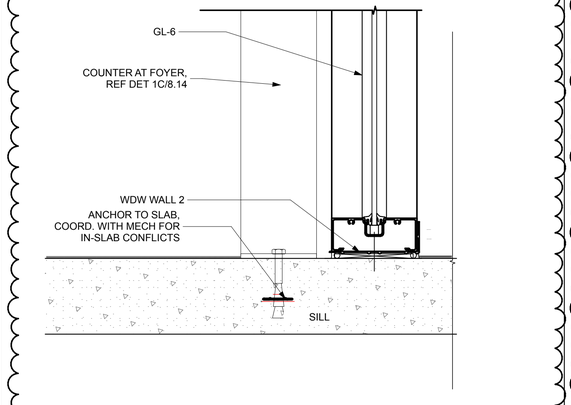

3D CASEWORK DETAIL
SCALE: 3" = 1'-0"

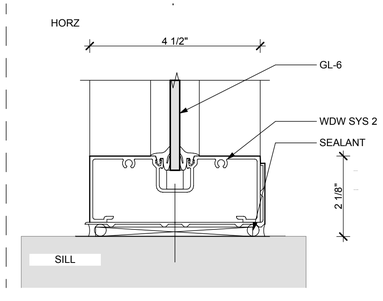

3C WDW-2 SECTION AT SILL
SCALE: 6" = 1'-0"

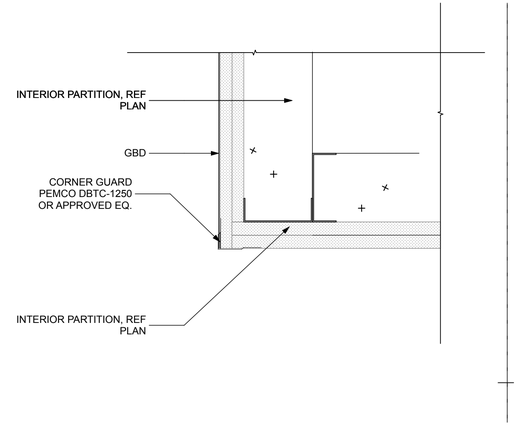

3B GBD PLAN DETAIL - CORNER GUARD
SCALE: 3" = 1'-0"

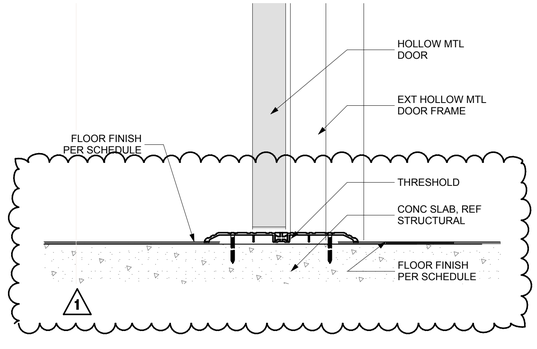

3A INT HOLLOW MTL DOOR THRESHOLD
SCALE: 3" = 1'-0"

STATE OF ALASKA
49 TH
JAMES F.S. BIBB
A-9949
REGISTERED PROFESSIONAL ARCHITECT
3/3/14

100% CONSTRUCTION DOCUMENTS

NorthWind Architects LLC
126 Seward St
Juneau, AK 99801
Ph #907.586.6150
www.northwindarch.com

THA
ARCHITECTURE

1" ACTUAL

IF THE ABOVE DIMENSION DOES NOT MEASURE ONE INCH (1") EXACTLY, THIS DRAWING WILL HAVE BEEN ENLARGED OR REDUCED, AFFECTING ALL LABELED SCALES.

MENDENHALL VALLEY PUBLIC LIBRARY

CBJ Contract # E14-051

Juneau, Alaska

SHEET TITLE:
SECTION DETAILS

REVISION:
1 ADDENDUM 04, 3/24/14
2 -
3 -
4 -

SHEET #
A8.6

DATE:
03/03/2014

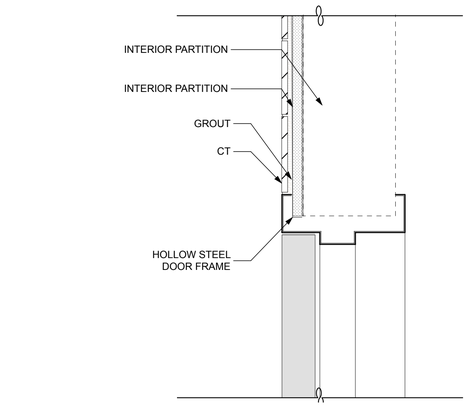

1D INTERIOR DETAIL - CT AT HM DOOR
SCALE: 3" = 1'-0"

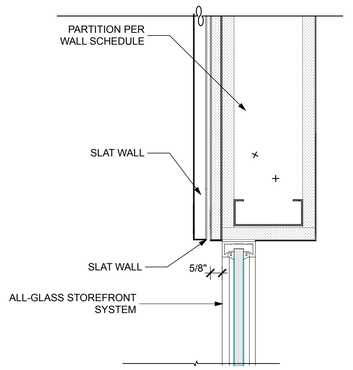

1C INTERIOR DETAIL - SLAT WALL AT GLASS
SCALE: 3" = 1'-0"

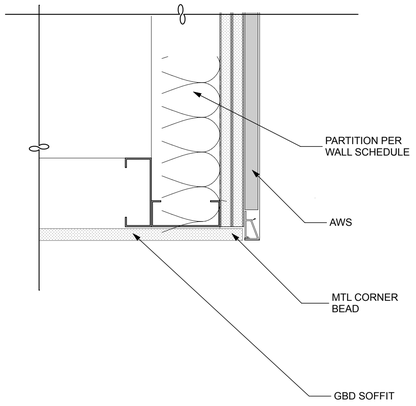

1B INTERIOR DETAIL - AWS AT SOFFIT
SCALE: 3" = 1'-0"

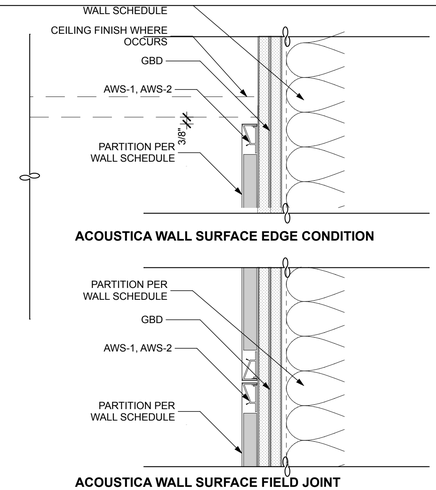

1A INTERIOR DETAIL - AWS
SCALE: 3" = 1'-0"

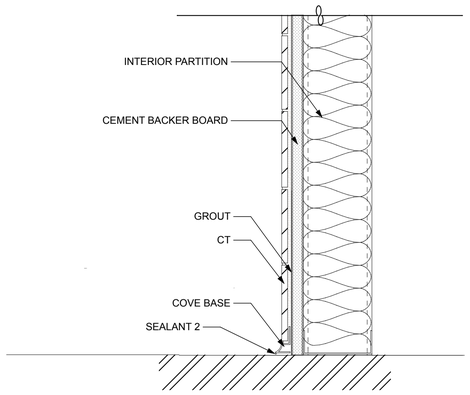

2D INTERIOR DETAIL - CT WALL BASE
SCALE: 3" = 1'-0"

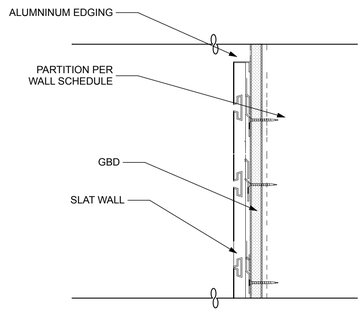

2C INTERIOR DETAIL - SLAT WALL
SCALE: 3" = 1'-0"

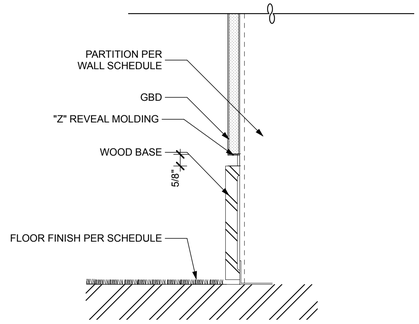

2B INTERIOR DETAIL - WDB, ONE LAYER GBD
SCALE: 3" = 1'-0"

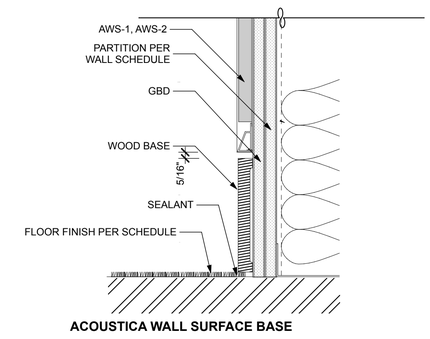

2A INTERIOR DETAIL - AWS
SCALE: 3" = 1'-0"

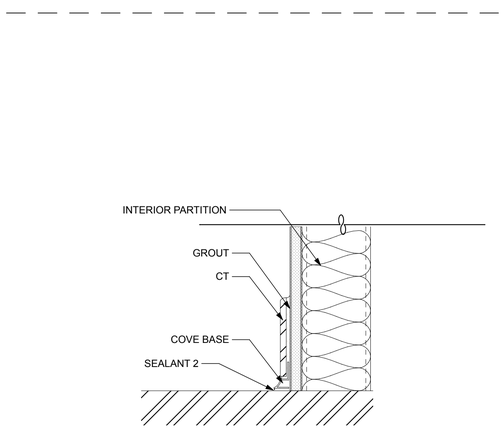

3D INTERIOR DETAIL - CT BASE
SCALE: 3" = 1'-0"

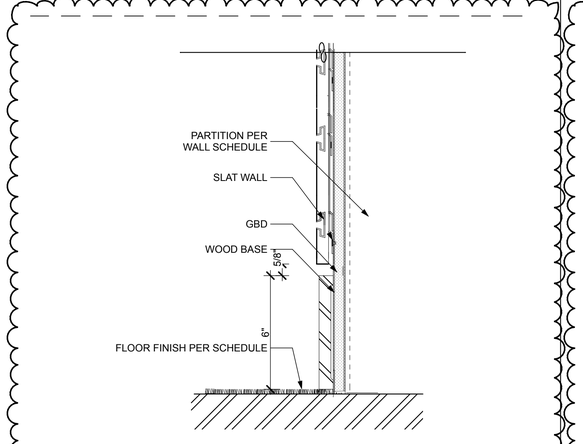

3C INTERIOR DETAIL - SLAT WALL BASE
SCALE: 3" = 1'-0"

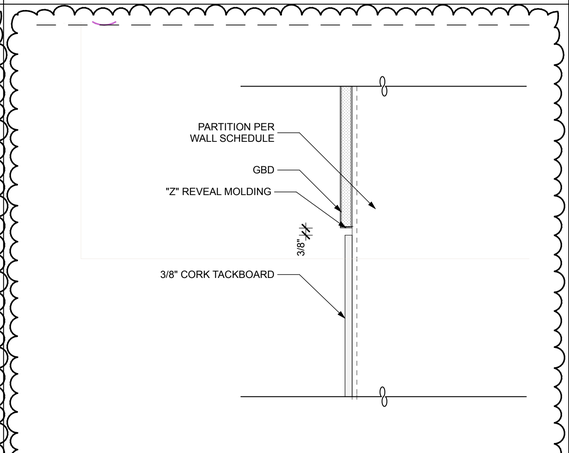

3B INTERIOR DETAIL - GBD/CORK TACKBOARD
SCALE: 3" = 1'-0"

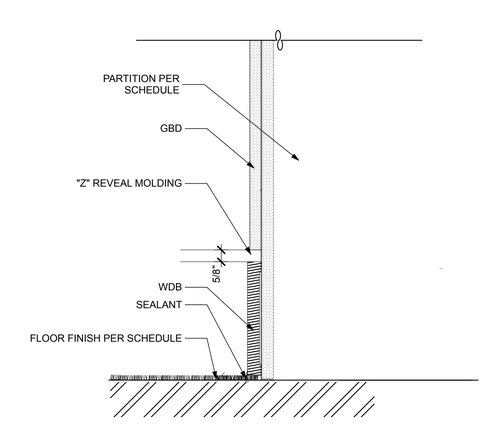

3A INTERIOR DETAIL - WDB TWO LAYER GBD
SCALE: 3" = 1'-0"

STATE OF ALASKA
49 TH
JAMES F.S. BIBB
A-9949
REGISTERED PROFESSIONAL ARCHITECT
3/3/14

100% CONSTRUCTION DOCUMENTS

NorthWind Architects LLC
126 Seward St
Juneau, AK 99801
Ph #907.586.6150
www.northwindarch.com

THA
ARCHITECTURE

1" ACTUAL

IF THE ABOVE DIMENSION DOES NOT MEASURE ONE INCH (1") EXACTLY, THIS DRAWING WILL HAVE BEEN ENLARGED OR REDUCED, AFFECTING ALL LABELED SCALES.

MENDENHALL VALLEY PUBLIC LIBRARY

CBJ Contract # E14-051
Juneau, Alaska

SHEET TITLE:
SECTION DETAILS

REVISION:
1 ADDENDUM 04, 3/24/14
2 -
3 -
4 -

SHEET # A8.7
DATE: 03/03/2014

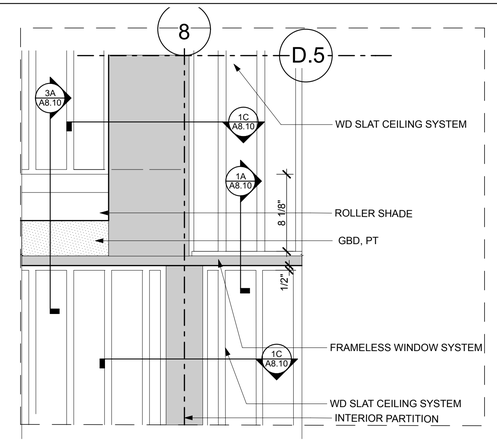

1C RCP UPPER PLAN VIEW
SCALE: 1 1/2"= 1'-0"

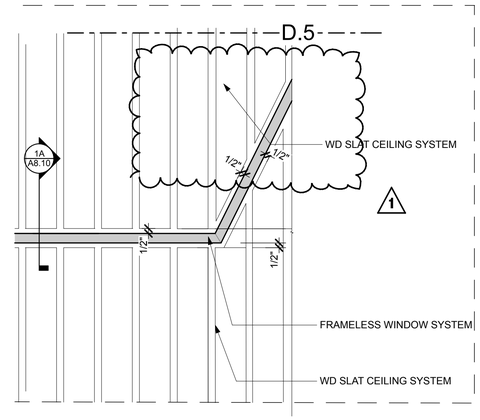

1B RCP UPPER PLAN VIEW
SCALE: 1 1/2"= 1'-0"

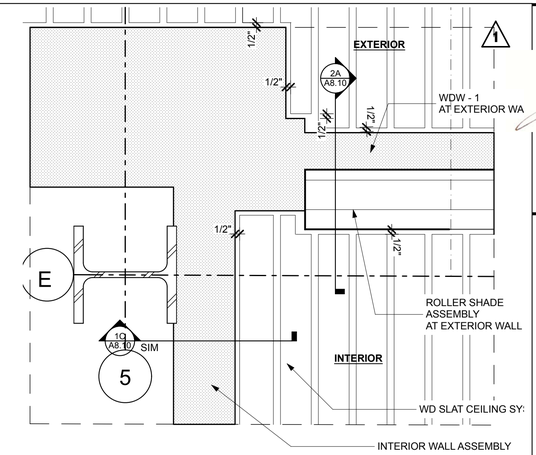

1A RCP UPPER PLAN VIEW
SCALE: 1 1/2"= 1'-0"

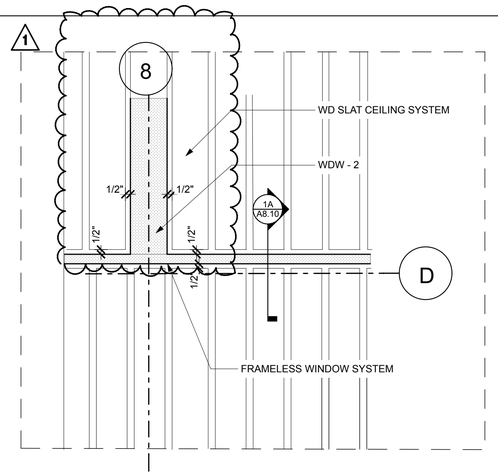

2D RCP UPPER PLAN VIEW
SCALE: 1 1/2"= 1'-0"

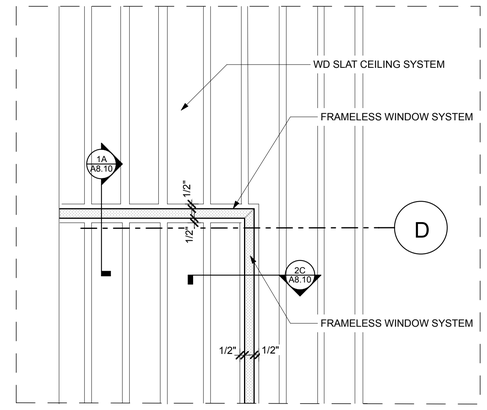

2C RCP UPPER PLAN VIEW
SCALE: 1 1/2"= 1'-0"

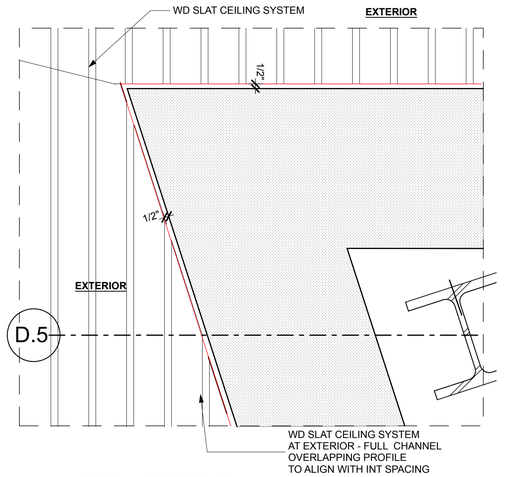

2B RCP UPPER PLAN VIEW
SCALE: 1 1/2"= 1'-0"

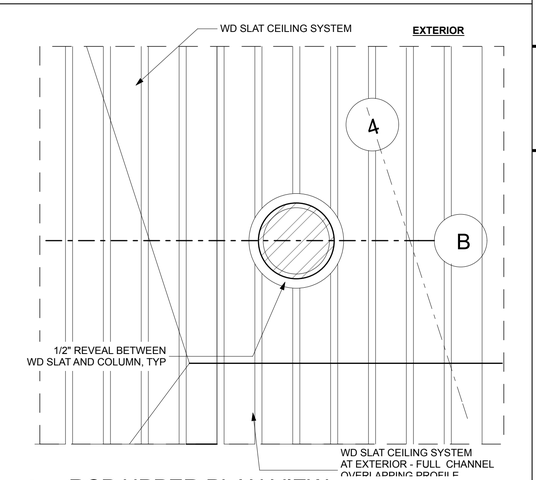

2A RCP UPPER PLAN VIEW
SCALE: 1 1/2"= 1'-0"

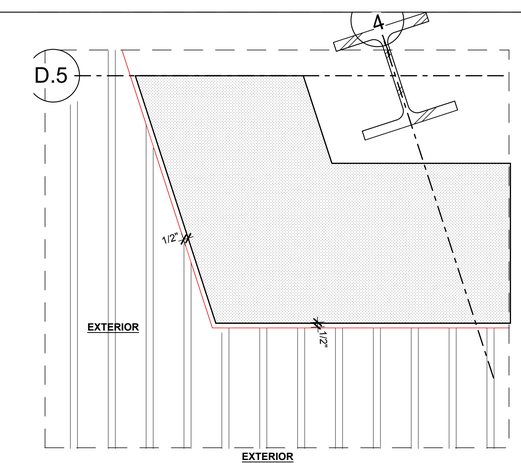

3C RCP UPPER PLAN VIEW
SCALE: 1 1/2"= 1'-0"

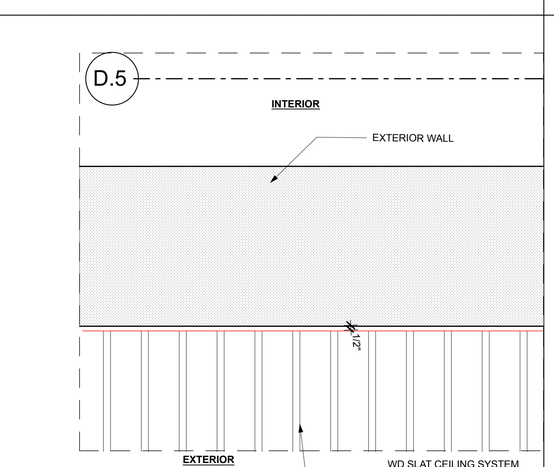

3B RCP UPPER PLAN VIEW
SCALE: 1 1/2"= 1'-0"

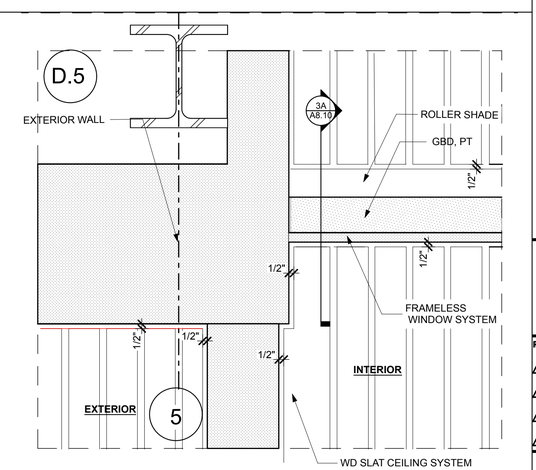

3A RCP UPPER PLAN VIEW
SCALE: 1 1/2"= 1'-0"

STATE OF ALASKA
49 TH
JAMES F.S. BIBB
A-9949
REGISTERED PROFESSIONAL ARCHITECT
3/3/14

100% CONSTRUCTION DOCUMENTS

NorthWind Architects LLC
126 Seward St
Juneau, AK 99801
Ph #907.586.6150
www.northwindarch.com

THA
ARCHITECTURE

1" ACTUAL

IF THE ABOVE DIMENSION DOES NOT MEASURE ONE INCH (1") EXACTLY, THIS DRAWING WILL HAVE BEEN ENLARGED OR REDUCED, AFFECTING ALL LABELED SCALES.

MENDENHALL VALLEY PUBLIC LIBRARY

CBJ Contract # E14-051
Juneau, Alaska

SHEET TITLE:
RCP PLAN DETAILS

REVISION:
1 ADDENDUM 04, 3/24/14
2 -
3 -
4 -

SHEET # A8.9
DATE: 03/03/2014

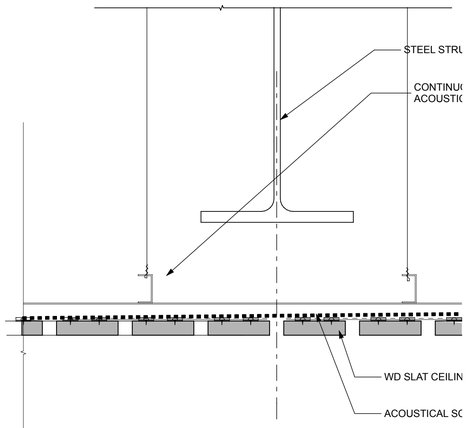

1D RCP UPPER SECTION VIEW
SCALE: 3" = 1'-0"

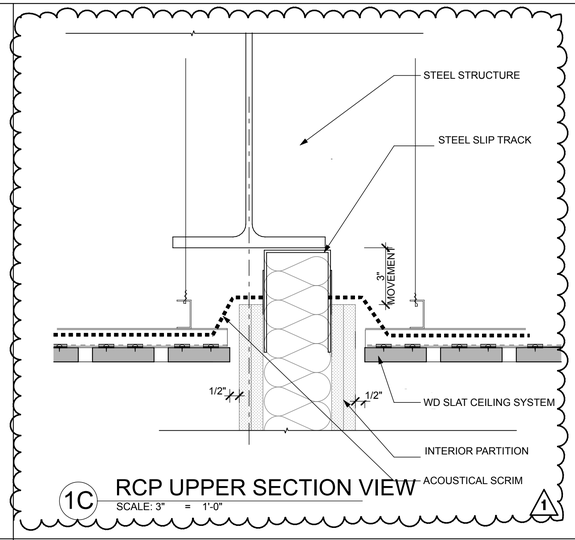

1C RCP UPPER SECTION VIEW
SCALE: 3" = 1'-0"

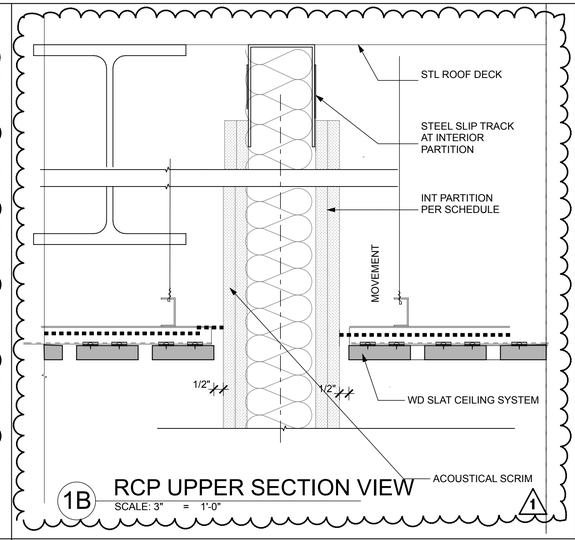

1B RCP UPPER SECTION VIEW
SCALE: 3" = 1'-0"

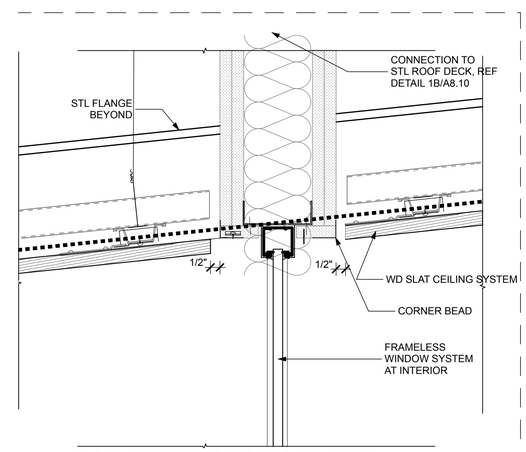

1A RCP UPPER SECTION VIEW
SCALE: 3" = 1'-0"

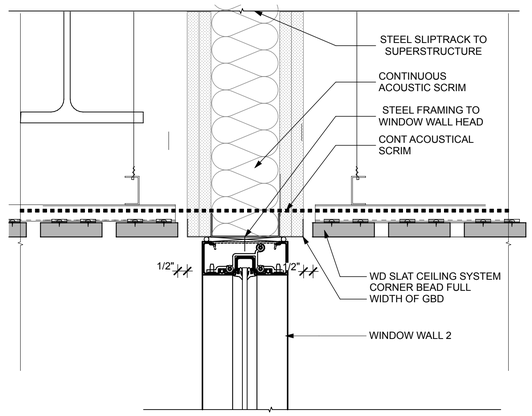

2D RCP UPPER SECTION VIEW
SCALE: 3" = 1'-0"

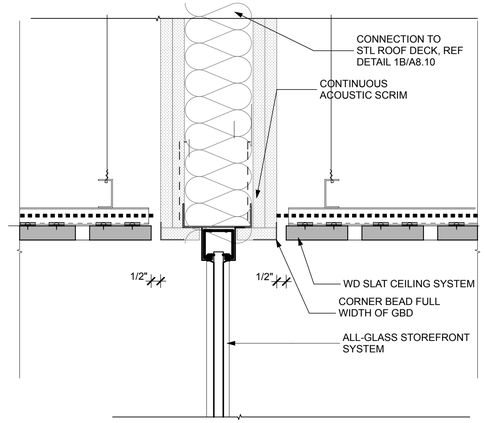

2C RCP UPPER SECTION VIEW
SCALE: 3" = 1'-0"

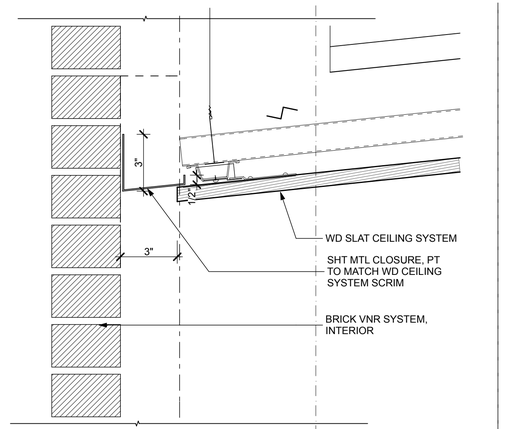

2B RCP UPPER SECTION VIEW AT FIREPLACE
SCALE: 3" = 1'-0"

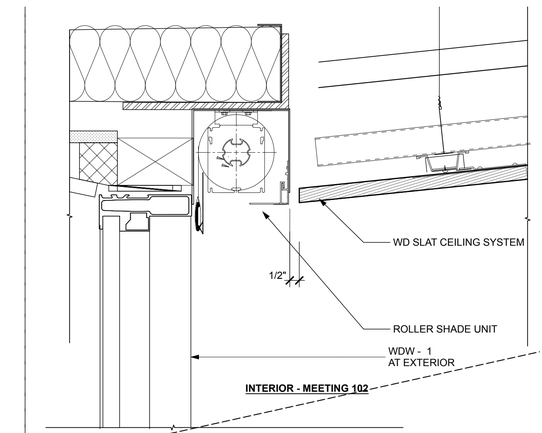

2A RCP UPPER SECTION AT ROLLER SHADE
SCALE: 3" = 1'-0"

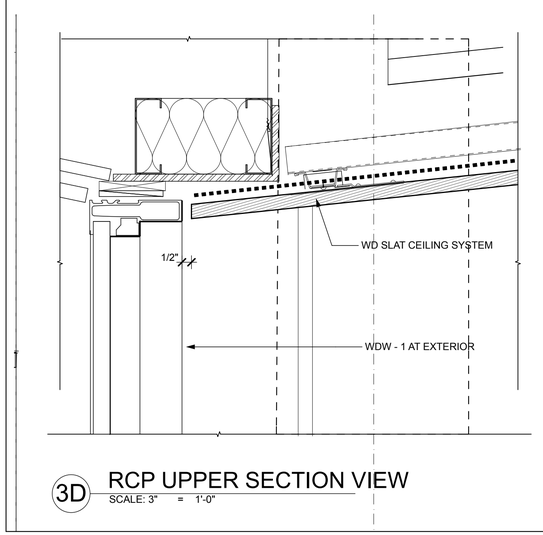

3D RCP UPPER SECTION VIEW
SCALE: 3" = 1'-0"

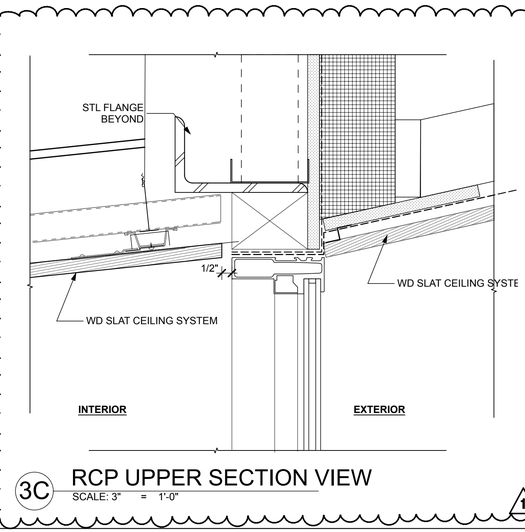

3C RCP UPPER SECTION VIEW
SCALE: 3" = 1'-0"

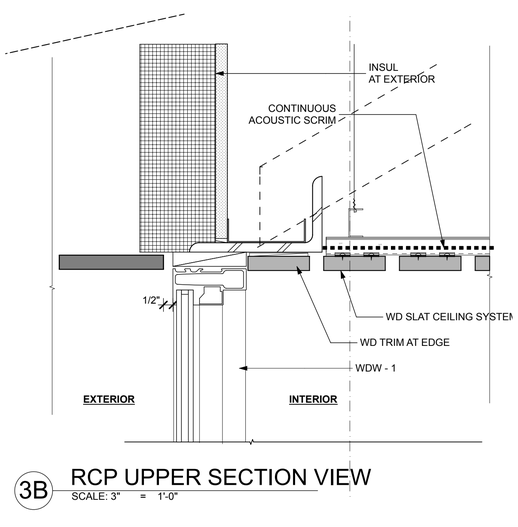

3B RCP UPPER SECTION VIEW
SCALE: 3" = 1'-0"

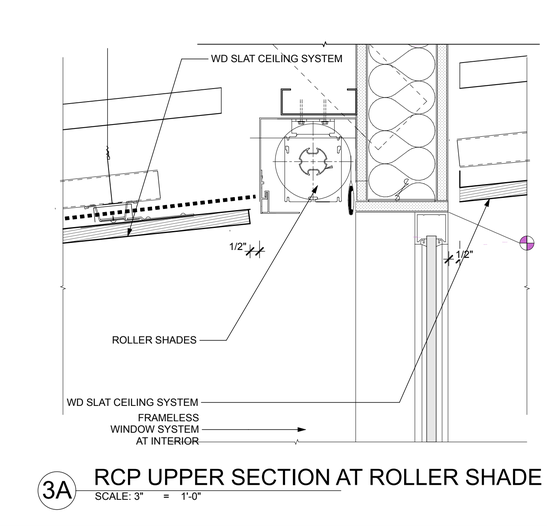

3A RCP UPPER SECTION AT ROLLER SHADE
SCALE: 3" = 1'-0"

STATE OF ALASKA
49 TH
JAMES F.S. BIBB
A-9949
REGISTERED PROFESSIONAL ARCHITECT
3/3/14

100% CONSTRUCTION DOCUMENTS

NorthWind Architects LLC
126 Seward St
Juneau, AK 99801
Ph #907.586.6150
www.northwindarch.com

THA
ARCHITECTURE

1" ACTUAL

IF THE ABOVE DIMENSION DOES NOT MEASURE ONE INCH (1") EXACTLY, THIS DRAWING WILL HAVE BEEN ENLARGED OR REDUCED, AFFECTING ALL LABELED SCALES.

MENDENHALL VALLEY PUBLIC LIBRARY

CBJ Contract # E14-051
Juneau, Alaska

SHEET TITLE:
RCP SECTION DETAILS

REVISION:
1 ADDENDUM 04, 3/24/14
2 -
3 -
4 -

SHEET # A8.10
DATE: 03/03/2014

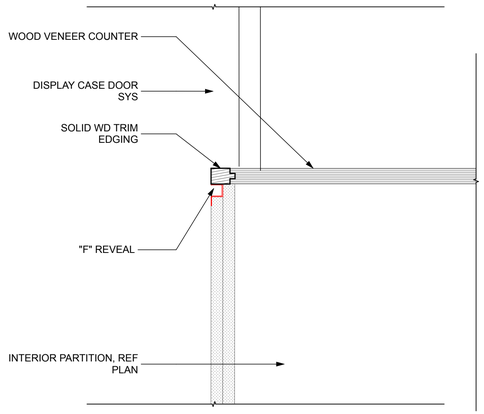

1D SECTION DETAIL AT DONOR WALL
SCALE: 3" = 1'-0"

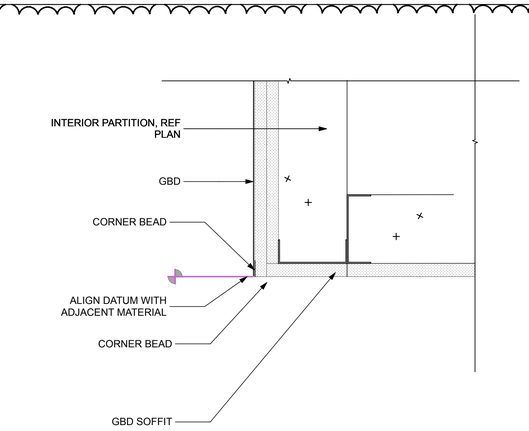

1C SECTION DETAIL AT DISPLAY SOFFIT
SCALE: 3" = 1'-0"

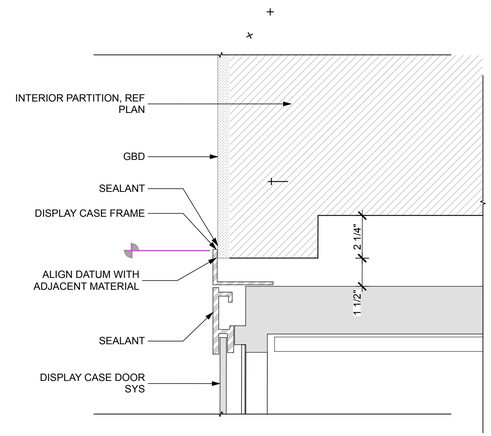

1B SECTION DETAIL AT DISPLAY HEAD
SCALE: 3" = 1'-0"

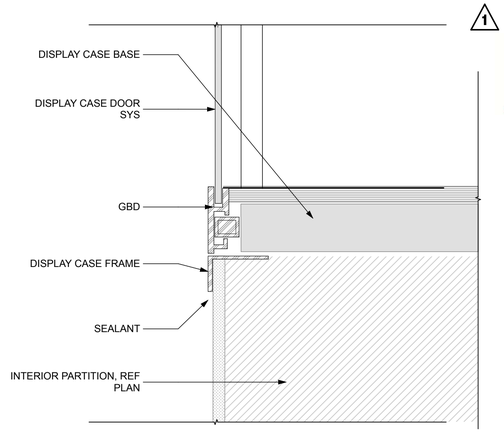

1A SECTION DETAIL AT DISPLAY SILL
SCALE: 3" = 1'-0"

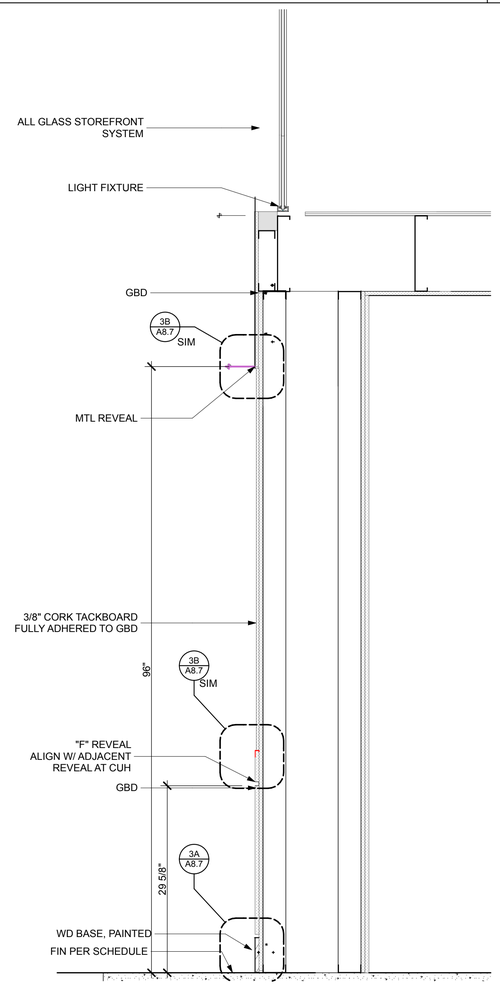

3D SECTION - VESTIBULE TACKWALL
SCALE: 1" = 1'-0"

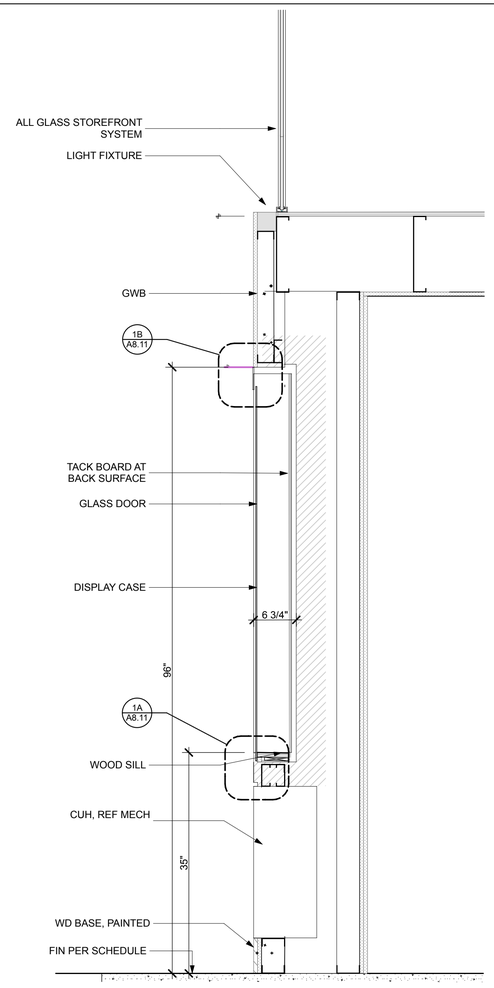

3C SECTION - VESTIBULE DISPLAY
SCALE: 1" = 1'-0"

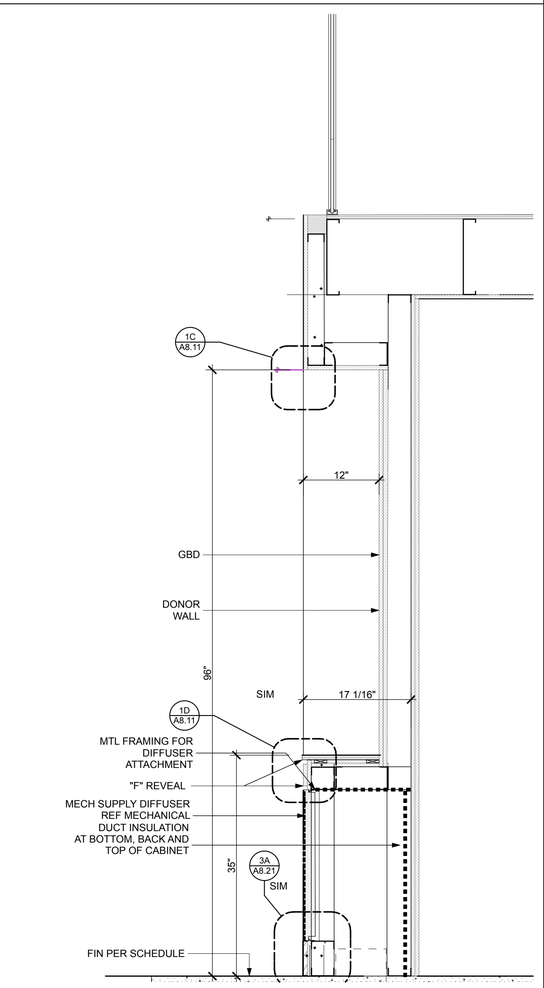

3B SECTION - DONOR WALL
SCALE: 1" = 1'-0"

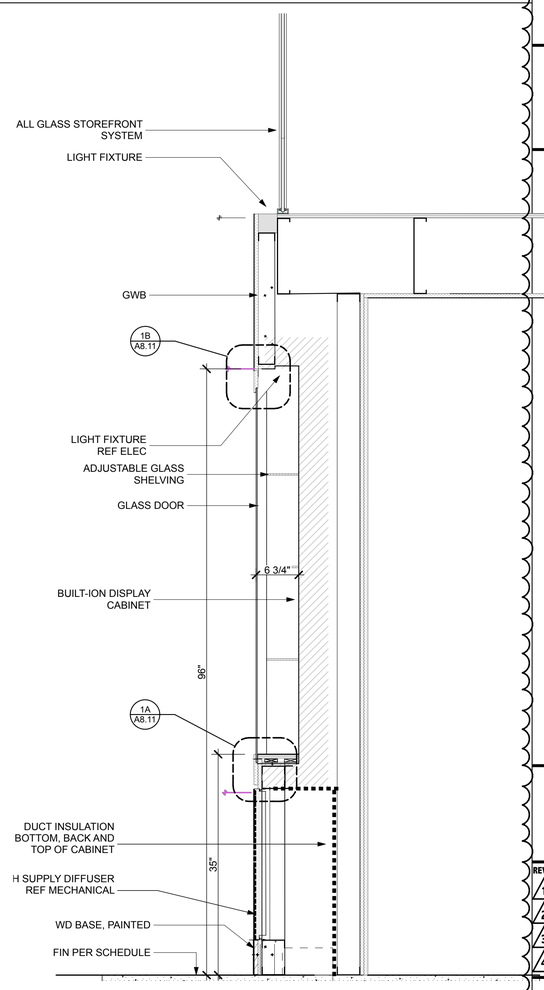

3A SECTION - SHALLOW DISPLAY CABINET
SCALE: 1" = 1'-0"

STATE OF ALASKA 49TH
JAMES F.S. BIBB
A-9949
REGISTERED PROFESSIONAL ARCHITECT
3/3/14

100% CONSTRUCTION DOCUMENTS

NorthWind Architects LLC
126 Seward St
Juneau, AK 99801
Ph #907.586.6150
www.northwindarch.com

THA
ARCHITECTURE

1" ACTUAL

IF THE ABOVE DIMENSION DOES NOT MEASURE ONE INCH (1") EXACTLY, THIS DRAWING WILL HAVE BEEN ENLARGED OR REDUCED, AFFECTING ALL LABELED SCALES.

MENDENHALL VALLEY PUBLIC LIBRARY

CBJ Contract # E14-051
Juneau, Alaska

SHEET TITLE:
CASEWORK SECTIONS

REVISION:
1 ADDENDUM 04, 3/24/14
2 -
3 -
4 -

SHEET # A8.11
DATE: 03/03/2014

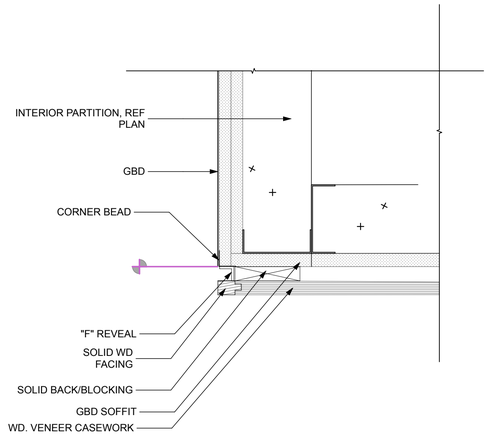

1D SECTION DETAIL AT DISPLAY SOFFIT

SCALE: 3" = 1'-0"

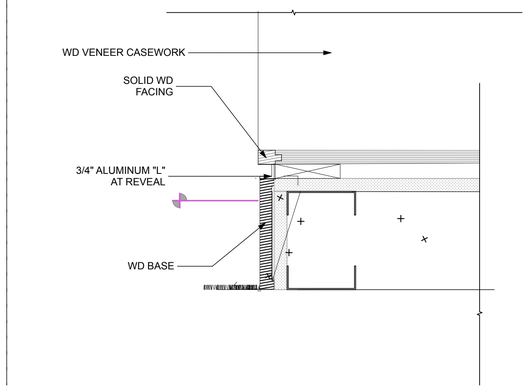

1C SECTION DETAIL AT CASEWORK BASE

SCALE: 3" = 1'-0"

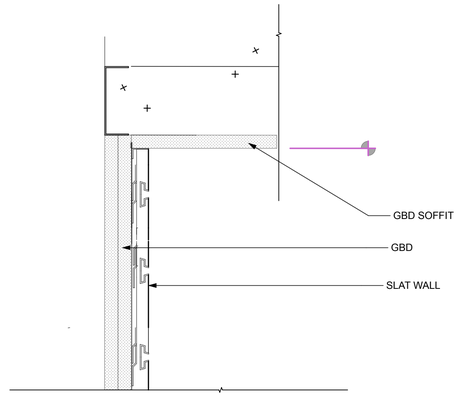

1B SECTION DETAIL AT SLAT WALL / SOFFIT

SCALE: 3" = 1'-0"

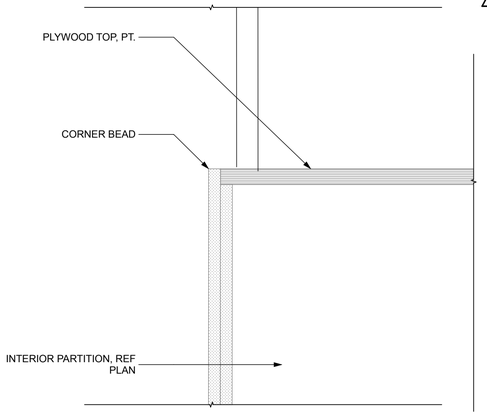

1A SECTION DETAIL AT SOFFIT TOP

SCALE: 3" = 1'-0"

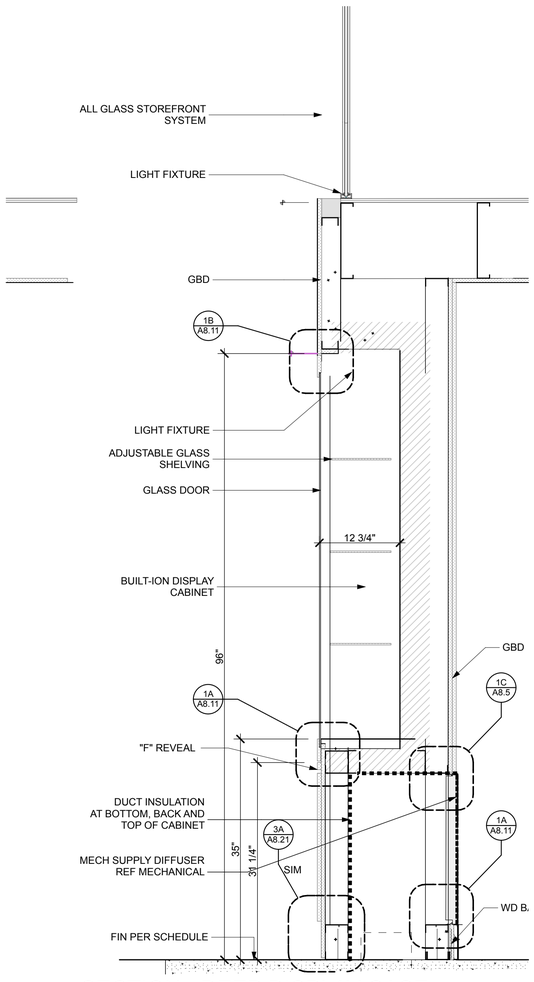

3D SECTION - DEEP DISPLAY CASE

SCALE: 1" = 1'-0"

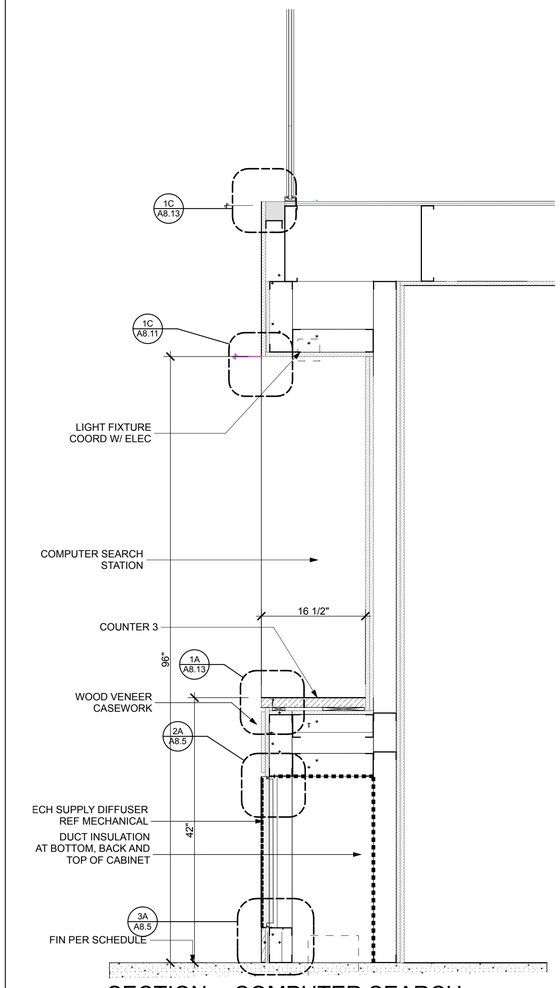

3C SECTION - COMPUTER SEARCH

SCALE: 1" = 1'-0"

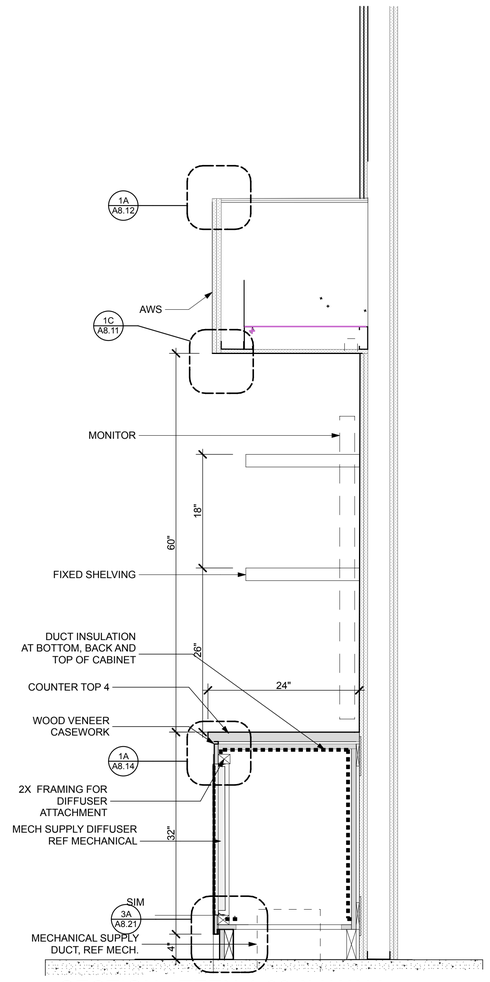

3B SECTION - TEEN 1-06 AV WALL

SCALE: 1" = 1'-0"

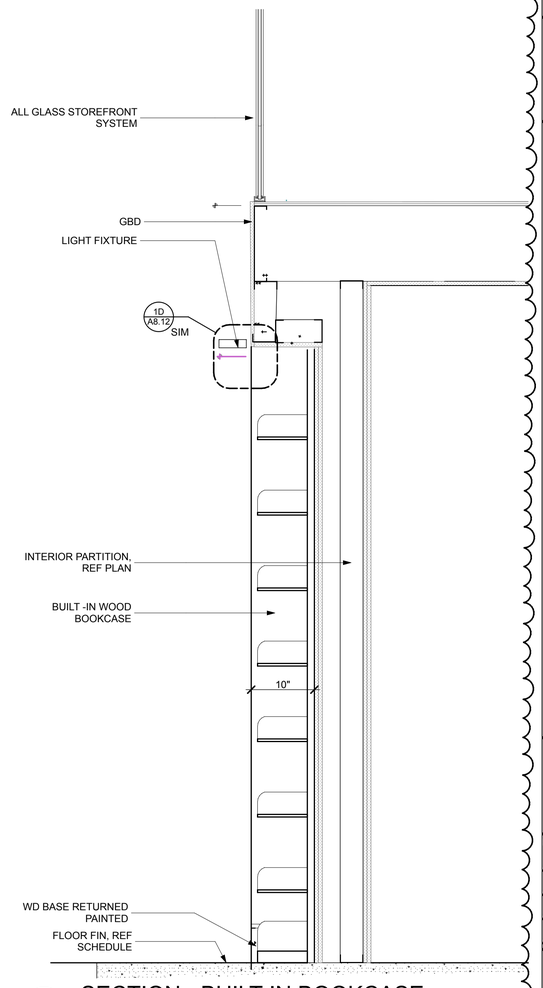

3A SECTION - BUILT-IN BOOKCASE

SCALE: 1" = 1'-0"

1

STATE OF ALASKA
49 TH
JAMES F.S. BIBB
A-9949
REGISTERED PROFESSIONAL ARCHITECT
3/3/14

100% CONSTRUCTION DOCUMENTS

NorthWind Architects LLC
126 Seward St
Juneau, AK 99801
Ph #907.586.6150
www.northwindarch.com

THA
ARCHITECTURE

1" ACTUAL

IF THE ABOVE DIMENSION DOES NOT MEASURE ONE INCH (1") EXACTLY, THIS DRAWING WILL HAVE BEEN ENLARGED OR REDUCED, AFFECTING ALL LABELED SCALES.

MENDENHALL VALLEY PUBLIC LIBRARY

CBJ Contract # E14-051
Juneau, Alaska

SHEET TITLE:
CASEWORK SECTIONS

REVISION:
1 ADDENDUM 04, 3/24/14
2 -
3 -
4 -

SHEET # A8.12
DATE: 03/03/2014

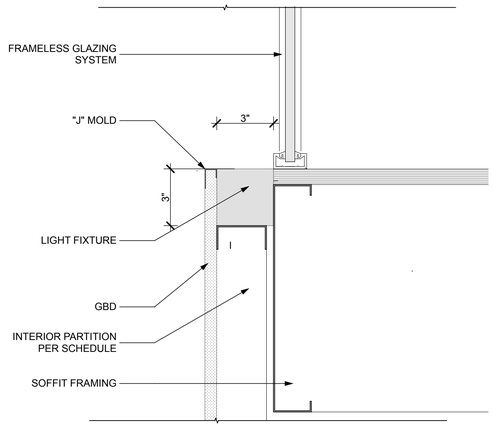

1C SECTION DETAIL AT SOFFIT LIGHT
SCALE: 3" = 1'-0"

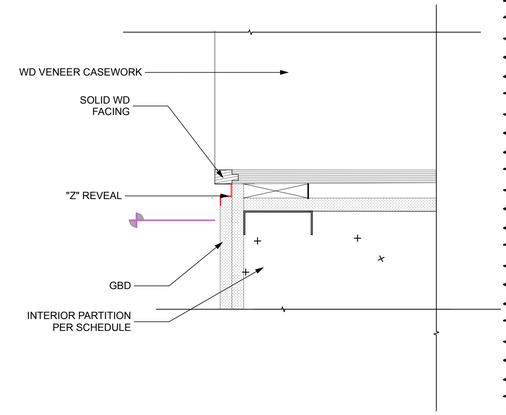

1B SECTION DETAIL AT WOOD SHELVING 1
SCALE: 3" = 1'-0"

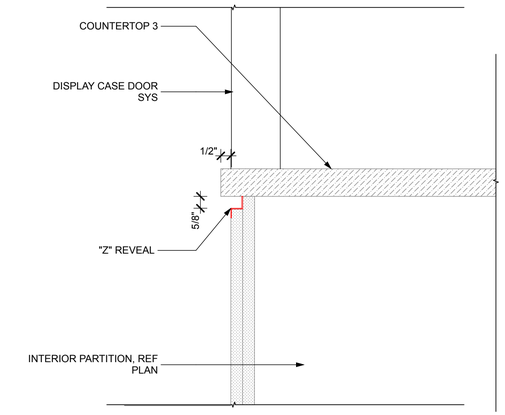

1A SECTION DETAIL AT COUNTER 3 1
SCALE: 3" = 1'-0"

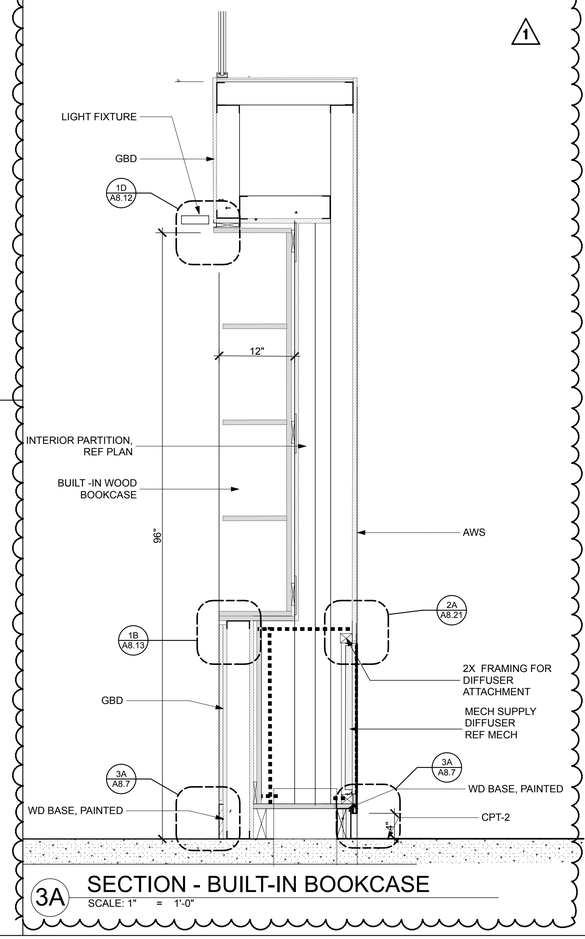

3A SECTION - BUILT-IN BOOKCASE
SCALE: 1" = 1'-0"

STATE OF ALASKA 49 TH
JAMES F.S. BIBB A-9949
REGISTERED PROFESSIONAL ARCHITECT
3/3/14

100% CONSTRUCTION DOCUMENTS

NorthWind Architects LLC
126 Seward St
Juneau, AK 99801
Ph #907.586.6150
www.northwindarch.com

THA
ARCHITECTURE

1" ACTUAL

IF THE ABOVE DIMENSION DOES NOT MEASURE ONE INCH (1") EXACTLY, THIS DRAWING WILL HAVE BEEN ENLARGED OR REDUCED, AFFECTING ALL LABELED SCALES.

MENDENHALL VALLEY PUBLIC LIBRARY

CBJ Contract # E14-051
Juneau, Alaska

SHEET TITLE:
CASEWORK SECTIONS

REVISION:
1 ADDENDUM 04, 3/24/14
2 -
3 -
4 -

SHEET # A8.13

DATE: 03/03/2014

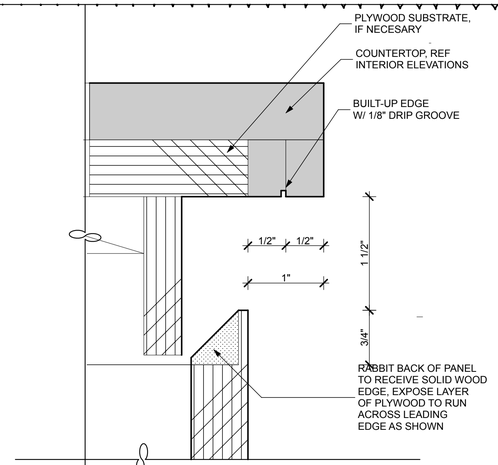

1D CASEWORK DETAIL
SCALE: 1' = 1'-0"

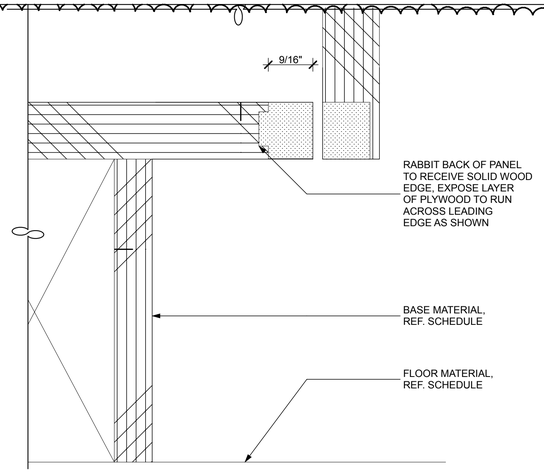

1C CASEWORK DETAIL
SCALE: 1' = 1'-0"

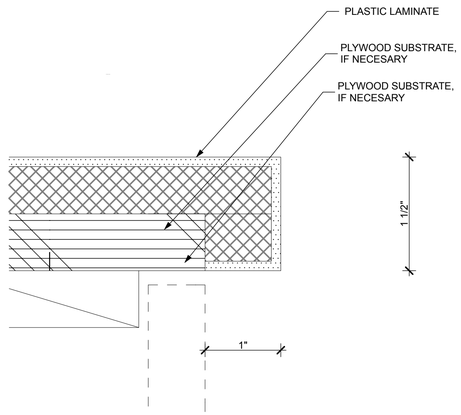

1B PLAM NOSING AT TYP. CABINET
SCALE: 1' = 1'-0"

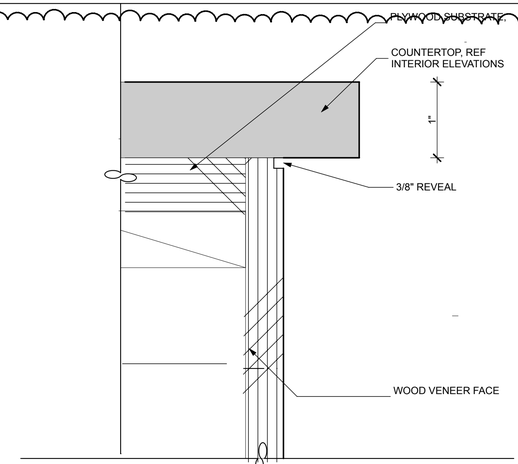

1A CASEWORK DETAIL
SCALE: 1' = 1'-0"

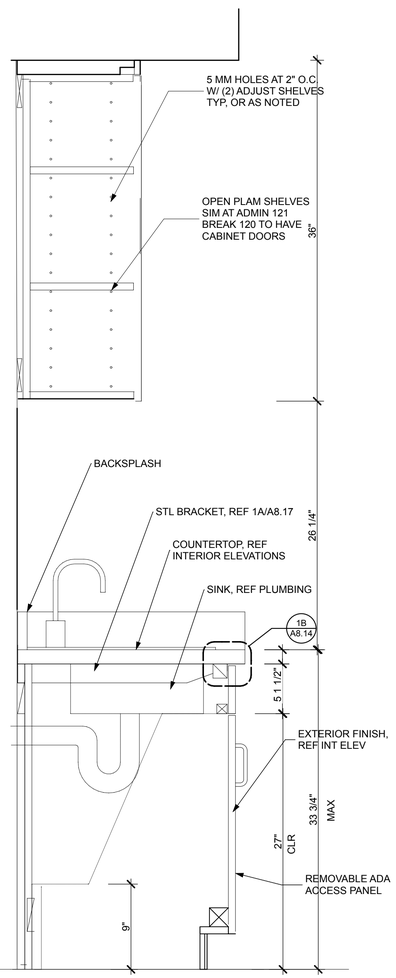

3D CASEWORK DETAIL
SCALE: 1 1/2"= 1'-0"

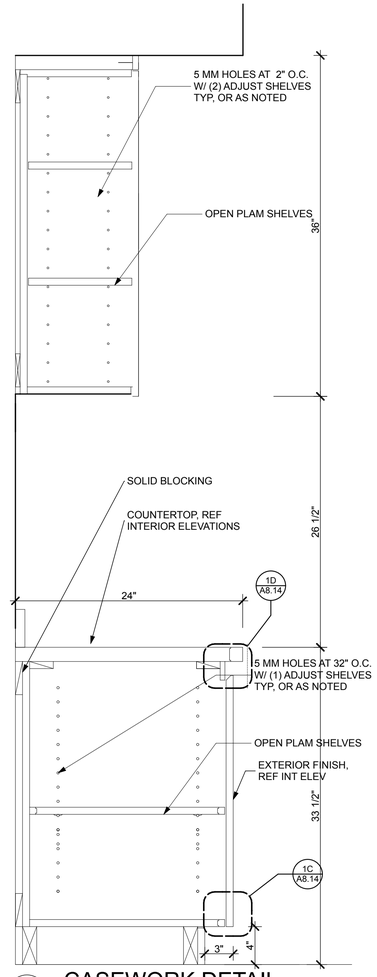

3D CASEWORK DETAIL
SCALE: 1 1/2"= 1'-0"

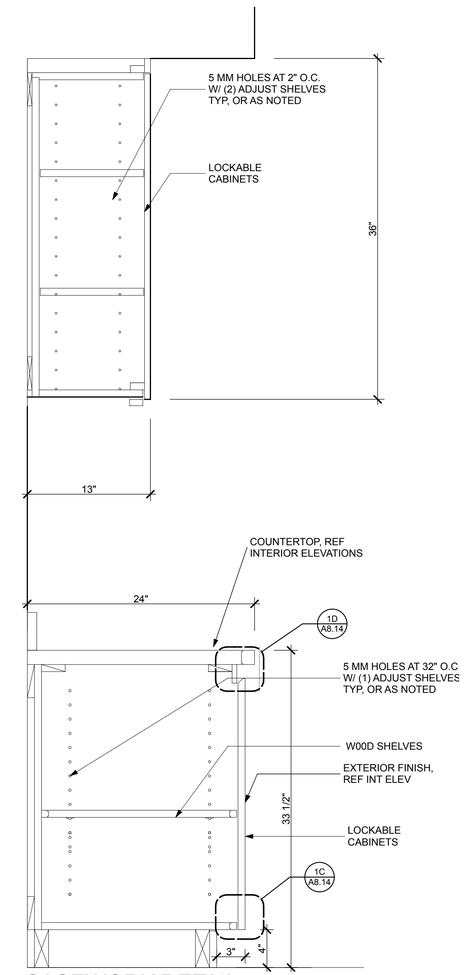

3B CASEWORK DETAIL
SCALE: 1 1/2"= 1'-0"

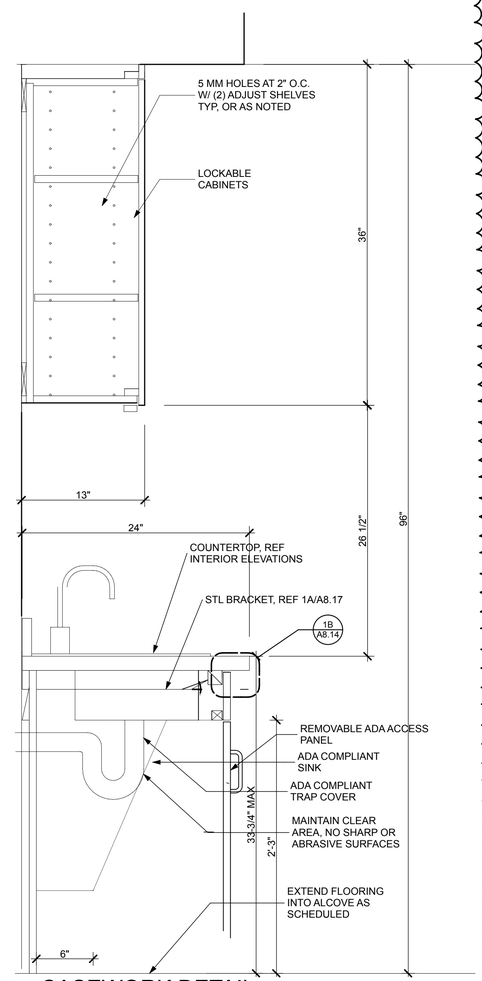

3A CASEWORK DETAIL
SCALE: 1 1/2"= 1'-0"

STATE OF ALASKA 49TH
JAMES F.S. BIBB
A-9949
REGISTERED PROFESSIONAL ARCHITECT
3/3/14

100% CONSTRUCTION DOCUMENTS

NorthWind Architects LLC
126 Seward St
Juneau, AK 99801
Ph #907.586.6150
www.northwindarch.com

THA
ARCHITECTURE

1" ACTUAL

IF THE ABOVE DIMENSION DOES NOT MEASURE ONE INCH (1") EXACTLY, THIS DRAWING WILL HAVE BEEN ENLARGED OR REDUCED, AFFECTING ALL LABELED SCALES.

MENDENHALL VALLEY PUBLIC LIBRARY

CBJ Contract # E14-051
Juneau, Alaska

SHEET TITLE:
CASEWORK SECTIONS

REVISION:
1 ADDENDUM 04, 3/24/14
2 -
3 -
4 -

SHEET # A8.14

DATE: 03/03/2014

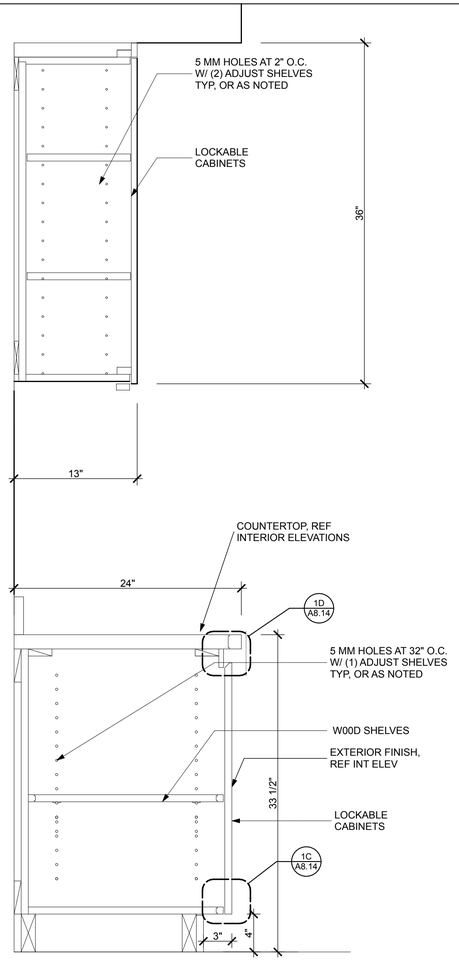

3D CASEWORK SECTION - BREAK 120
SCALE: 1 1/2"= 1'-0"

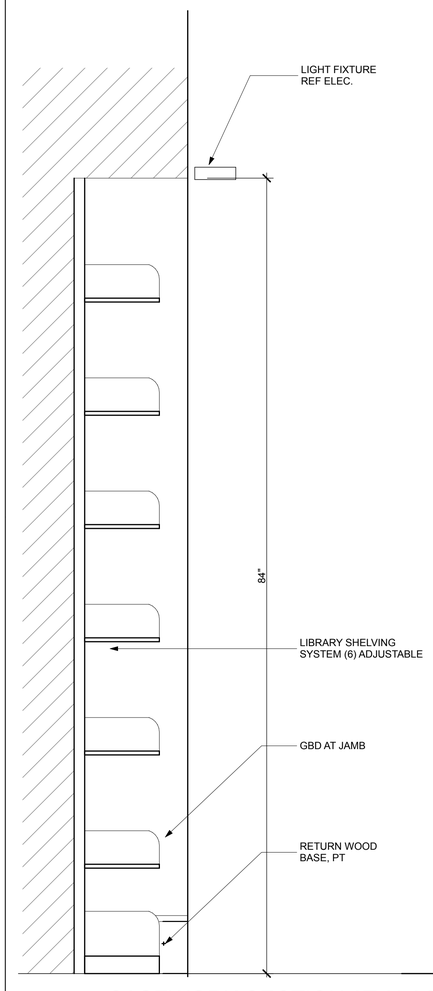

3C CASEWORK SECTION AT ALASKA 114
SCALE: 1 1/2"= 1'-0"

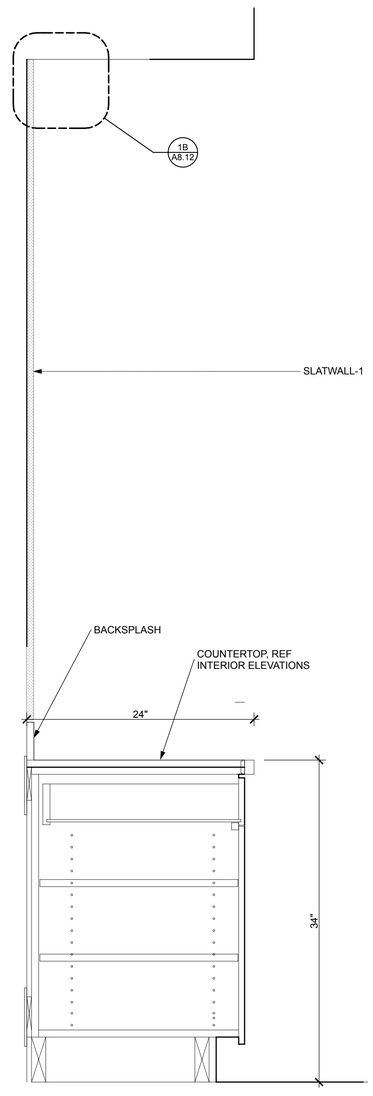

3B CASEWORK SECTION - OPEN LIB 107
SCALE: 1 1/2"= 1'-0"

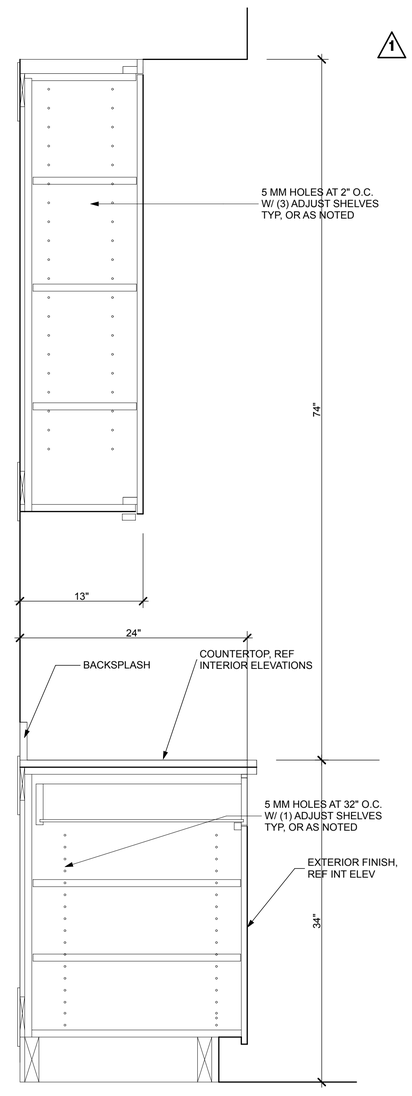

3A CASEWORK DETAIL
SCALE: 1 1/2"= 1'-0"

STATE OF ALASKA
49 TH
JAMES F.S. BIBB
A-9949
REGISTERED PROFESSIONAL ARCHITECT
3/3/14

100% CONSTRUCTION DOCUMENTS

NorthWind Architects LLC
126 Seward St
Juneau, AK 99801
Ph #907.586.6150
www.northwindarch.com

THA
ARCHITECTURE

1" ACTUAL

IF THE ABOVE DIMENSION DOES NOT MEASURE ONE INCH (1") EXACTLY, THIS DRAWING WILL HAVE BEEN ENLARGED OR REDUCED, AFFECTING ALL LABELED SCALES.

MENDENHALL VALLEY PUBLIC LIBRARY

CBJ Contract # E14-051
Juneau, Alaska

SHEET TITLE:
CASEWORK SECTIONS

REVISION:
1 ADDENDUM 04, 3/24/14
2 -
3 -
4 -

SHEET # A8.15

DATE: 03/03/2014

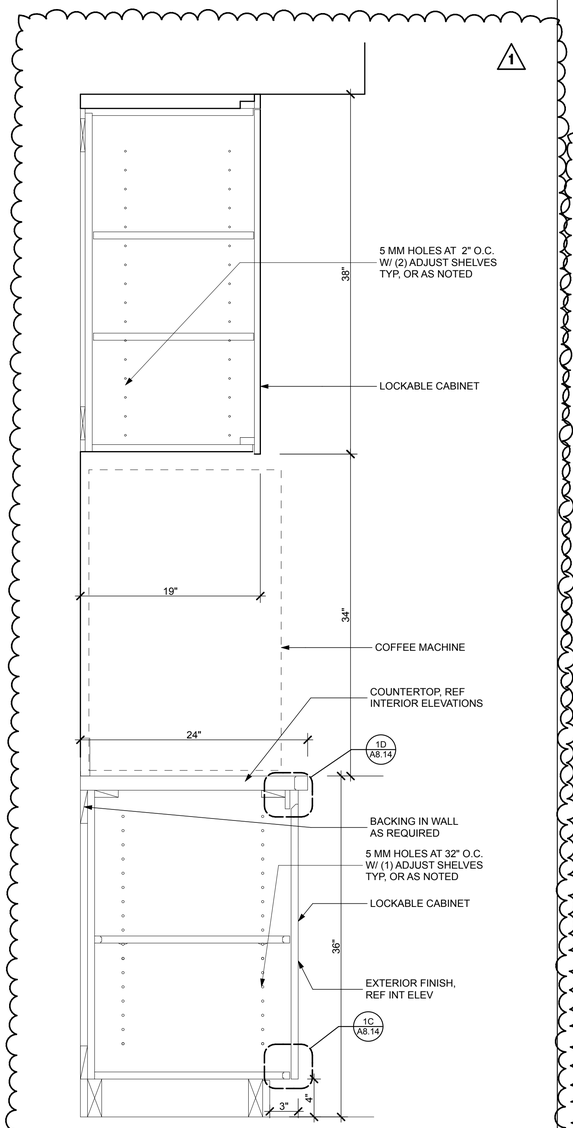

3D CASEWORK SECTION
SCALE: 1 1/2"= 1'-0"

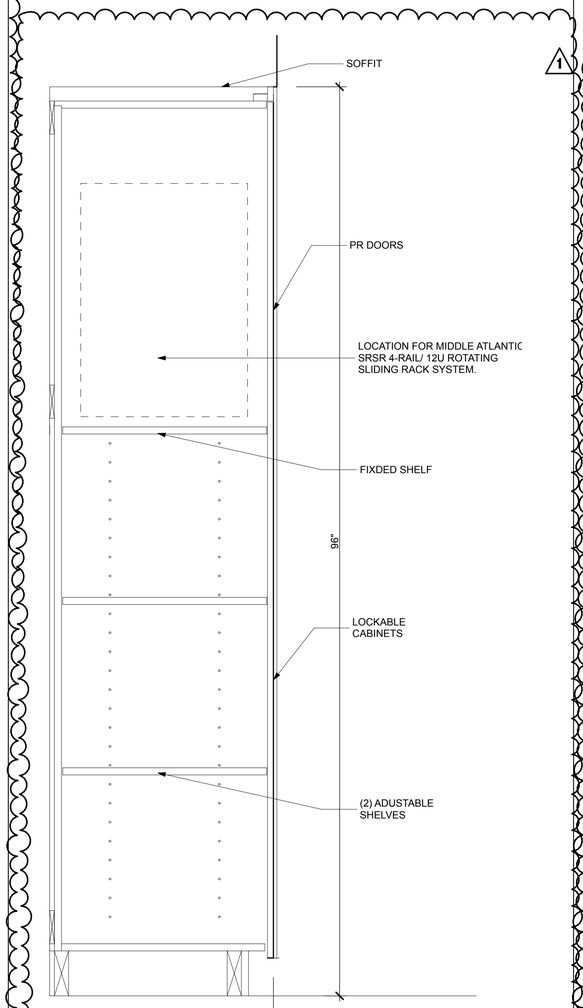

3C CASEWORK SECTION - MEETING 102
SCALE: 1 1/2"= 1'-0"

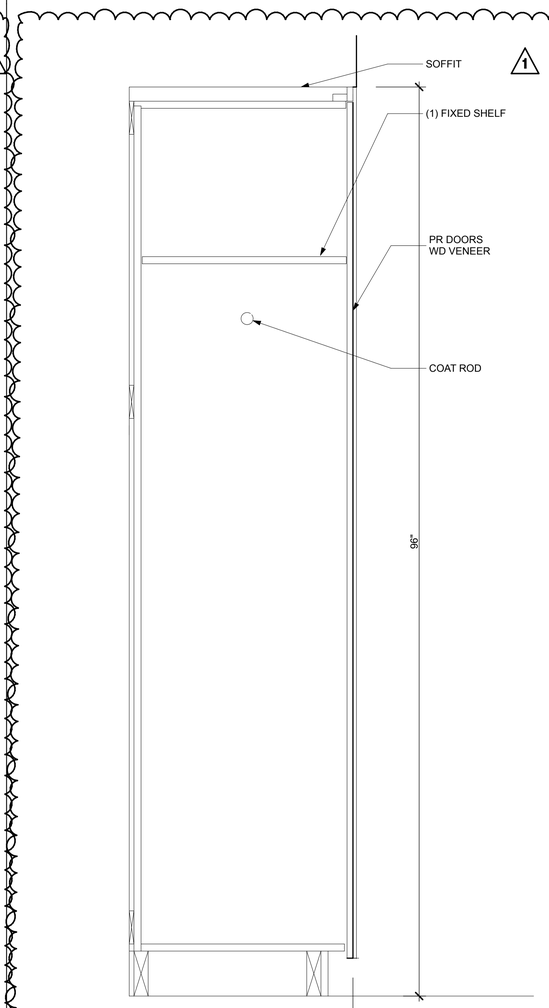

3B CASEWORK SECTION - ADMIN 121
SCALE: 1 1/2"= 1'-0"

STATE OF ALASKA
49 TH
JAMES F.S. BIBB
A-9949
REGISTERED PROFESSIONAL ARCHITECT
3/3/14

100% CONSTRUCTION DOCUMENTS

NorthWind Architects LLC
126 Seward St
Juneau, AK 99801
Ph #907.586.6150
www.northwindarch.com

THA
ARCHITECTURE

1" ACTUAL

IF THE ABOVE DIMENSION DOES NOT MEASURE ONE INCH (1") EXACTLY, THIS DRAWING WILL HAVE BEEN ENLARGED OR REDUCED, AFFECTING ALL LABELED SCALES.

MENDENHALL VALLEY PUBLIC LIBRARY

CBJ Contract # E14-051
Juneau, Alaska

SHEET TITLE:
CASEWORK SECTIONS

REVISION:
1 ADDENDUM 04, 3/24/14
2 -
3 -
4 -

SHEET # A8.16
DATE: 03/03/2014

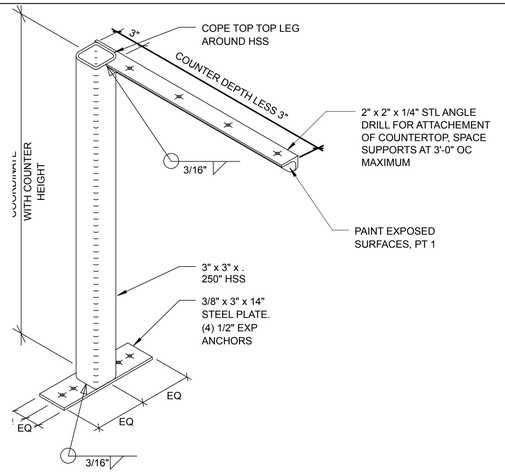

1D CASEWORK DETAIL
SCALE: 1 1/2"= 1'-0"

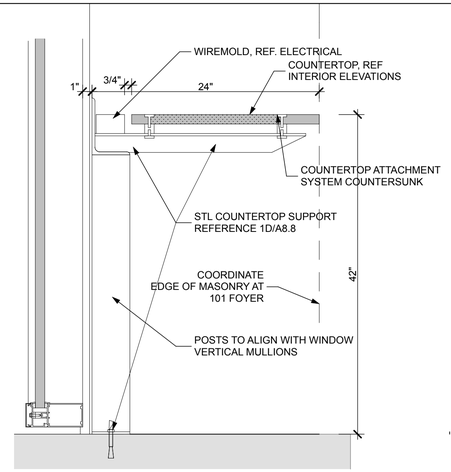

1C CASEWORK DETAIL
SCALE: 1 1/2"= 1'-0"

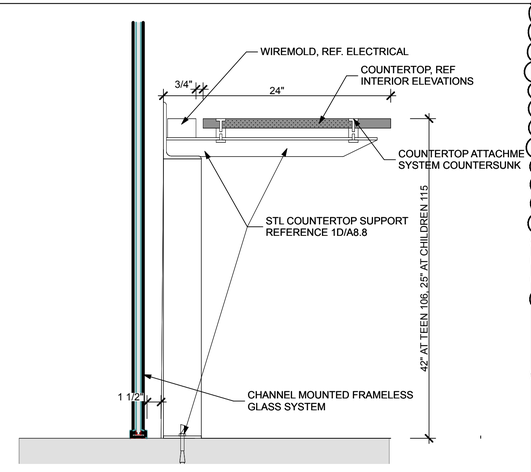

1B CASEWORK DETAIL
SCALE: 1 1/2"= 1'-0"

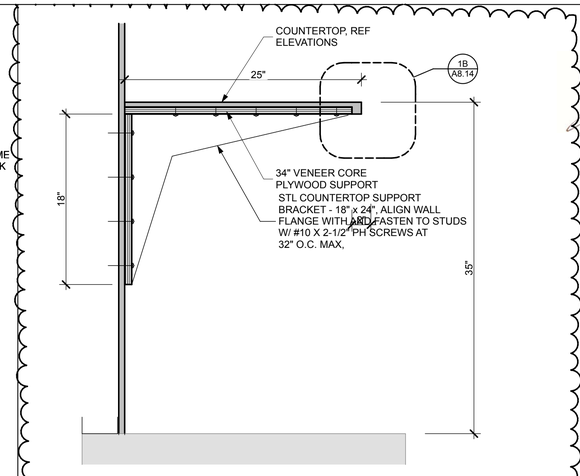

1A CASEWORK DETAIL
SCALE: 1 1/2"= 1'-0"

1

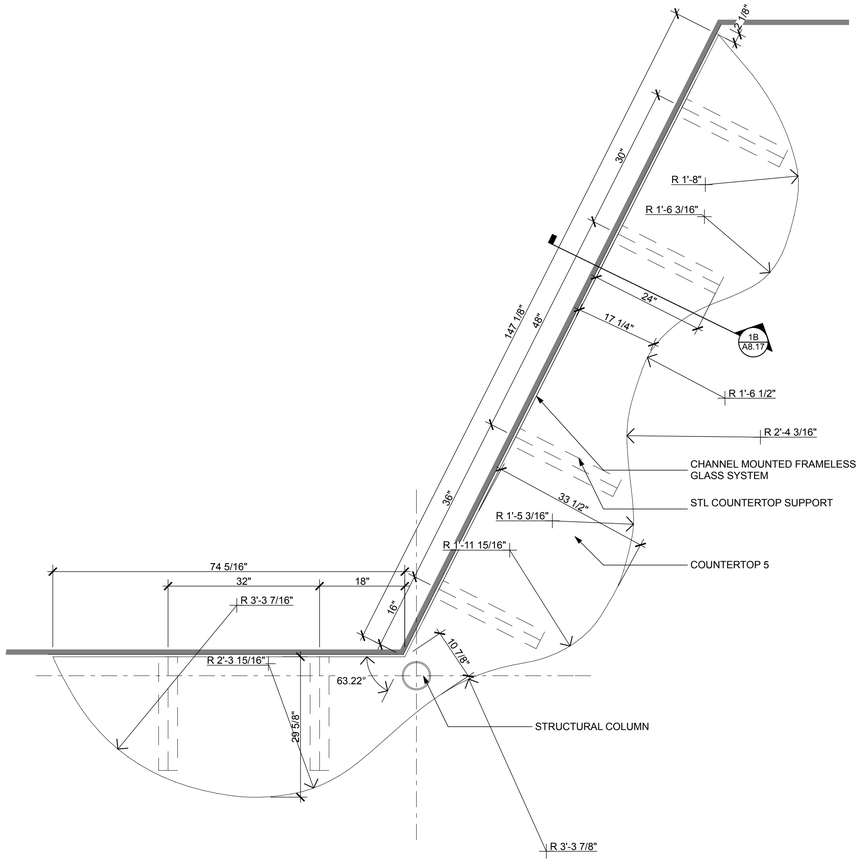

3D PLAN VIEW - COMPUTER COUNTER AT CHILDREN 116
SCALE: 3/4" = 1'-0"

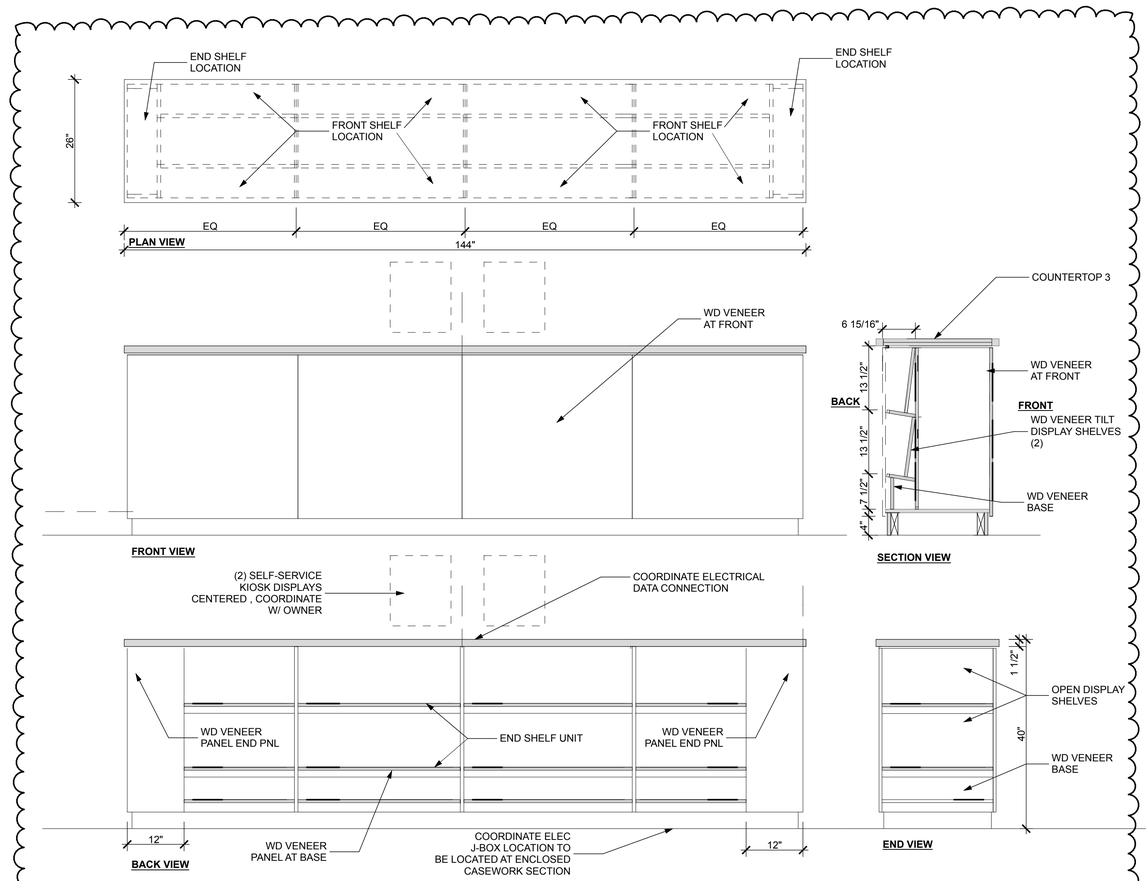

3C INFORMATION/DISPLAY KIOSK
SCALE: 3/4" = 1'-0"

STATE OF ALASKA 49TH
JAMES F.S. BIBB
A-9949
REGISTERED PROFESSIONAL ARCHITECT
3/3/14

100% CONSTRUCTION DOCUMENTS

NorthWind Architects LLC
126 Seward St
Juneau, AK 99801
Ph #907.586.6150
www.northwindarch.com

THA
ARCHITECTURE

1" ACTUAL

IF THE ABOVE DIMENSION DOES NOT MEASURE ONE INCH (1") EXACTLY, THIS DRAWING WILL HAVE BEEN ENLARGED OR REDUCED, AFFECTING ALL LABELED SCALES.

MENDENHALL VALLEY PUBLIC LIBRARY

CBJ Contract # E14-051
Juneau, Alaska

SHEET TITLE:
CASEWORK DETAILS

REVISION:
1 ADDENDUM 04, 3/24/14
2 -
3 -
4 -

SHEET # A8.17
DATE: 03/03/2014

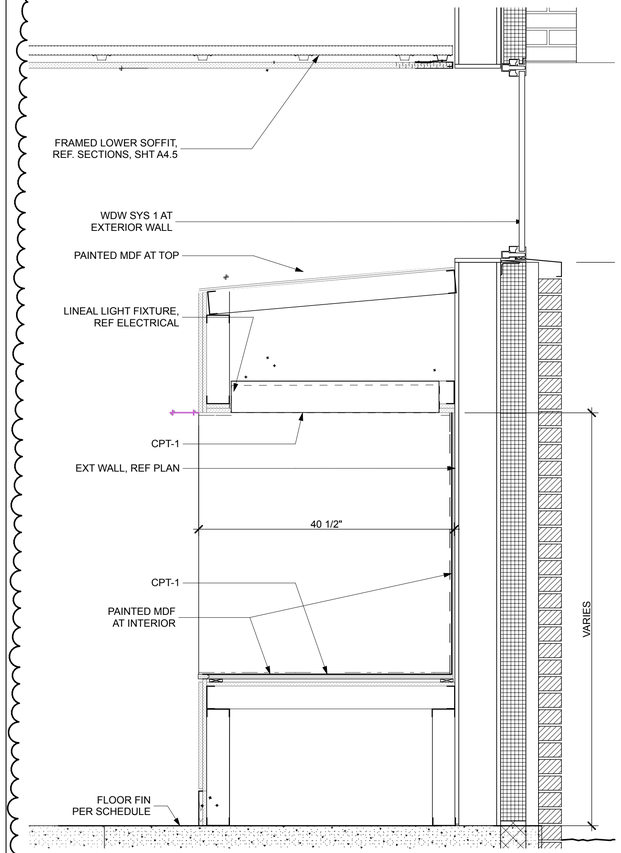

2D CASEWORK SECTION AT WINDOW
SCALE: 1" = 1'-0"

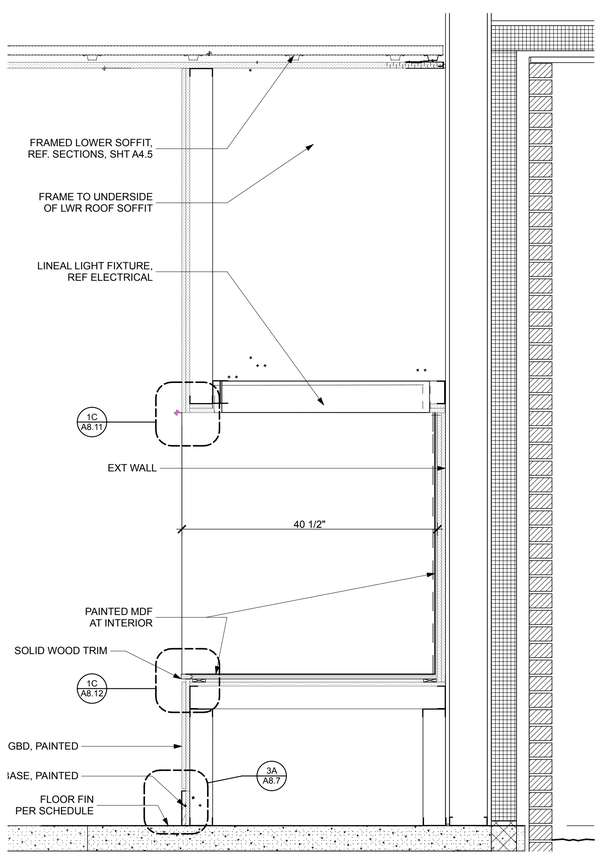

2C CASEWORK SECTION AT FULL SOFFIT
SCALE: 1" = 1'-0"

1

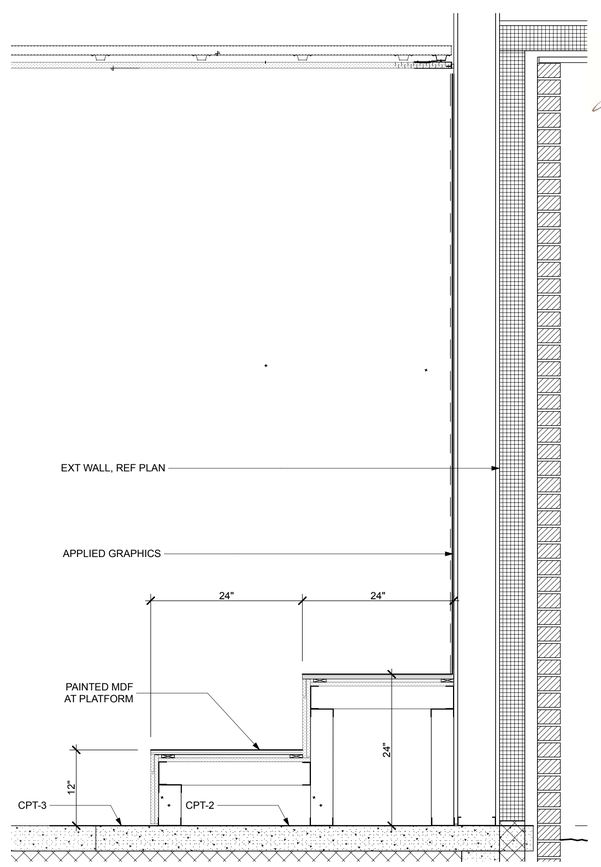

2B SECTION AT STORYTIME STAIR PLATFORM
SCALE: 1" = 1'-0"

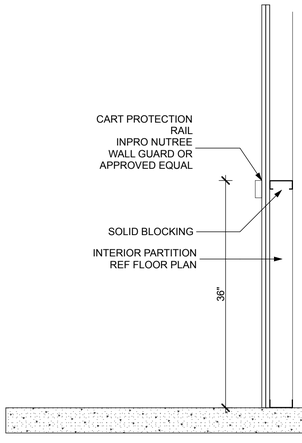

3D BOOK CART WALL GUARD
SCALE: 1" = 1'-0"

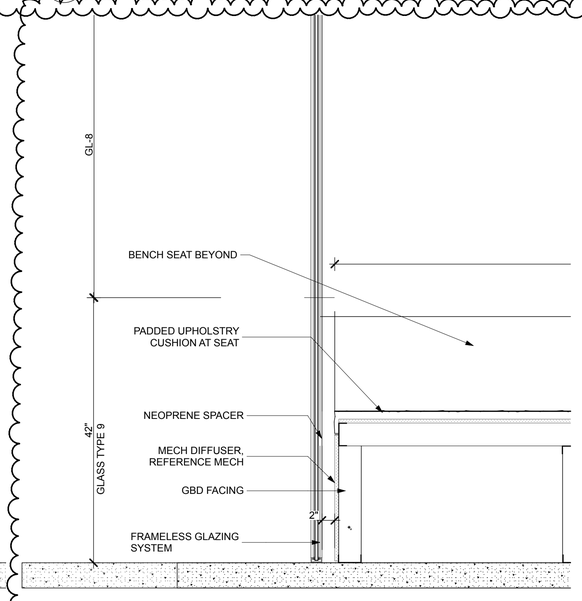

3C BUILT IN SEAT AT FRAMELESS GLAZING
SCALE: 1" = 1'-0"

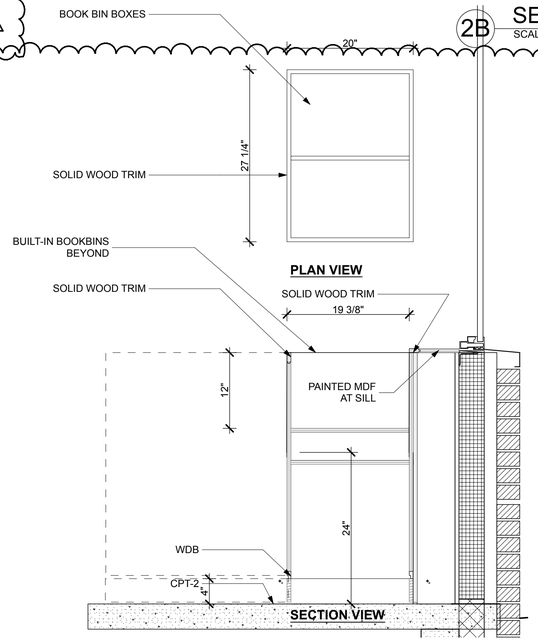

3B BOOKBIN AT CHILDRENS BUILT-IN SEAT
SCALE: 1" = 1'-0"

1

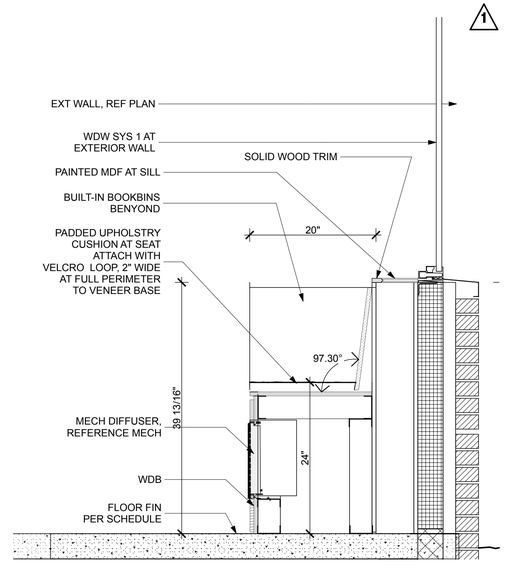

3A SECTION AT CHILDRENS BUILT-IN SEAT
SCALE: 1" = 1'-0"

STATE OF ALASKA
49 TH
JAMES F.S. BIBB
A-9949
REGISTERED PROFESSIONAL ARCHITECT
3/3/14

100% CONSTRUCTION DOCUMENTS

NorthWind Architects LLC
126 Seward St
Juneau, AK 99801
Ph #907.586.6150
www.northwindarch.com

THA
ARCHITECTURE

1" ACTUAL

IF THE ABOVE DIMENSION DOES NOT MEASURE ONE INCH (1") EXACTLY, THIS DRAWING WILL HAVE BEEN ENLARGED OR REDUCED, AFFECTING ALL LABELED SCALES.

MENDENHALL VALLEY PUBLIC LIBRARY

CBJ Contract # E14-051
Juneau, Alaska

SHEET TITLE:
CHILDREN 119
CASEWORK

REVISION:
1 ADDENDUM 04, 3/24/14
2 -
3 -
4 -

SHEET # A8.19

DATE: 03/03/2014

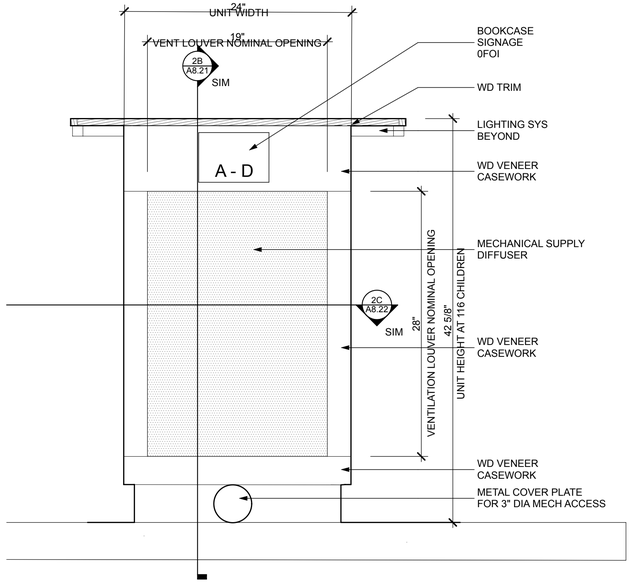

1C 42" HIGH BOOKCASE SUPPLY DIFFUSER - END ELEVATION
SCALE: 1 1/2"= 1'-0"

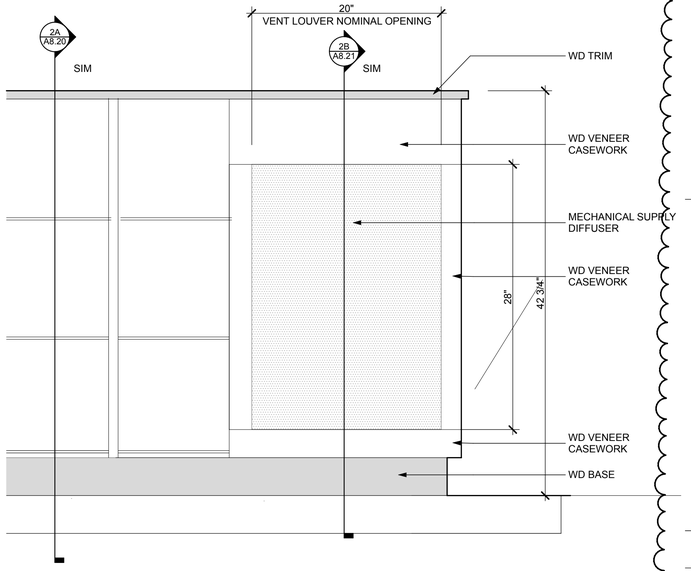

1B 42" HIGH BOOKCASE SUPPLY DIFFUSER - SIDE ELEVATION
SCALE: 1 1/2"= 1'-0"

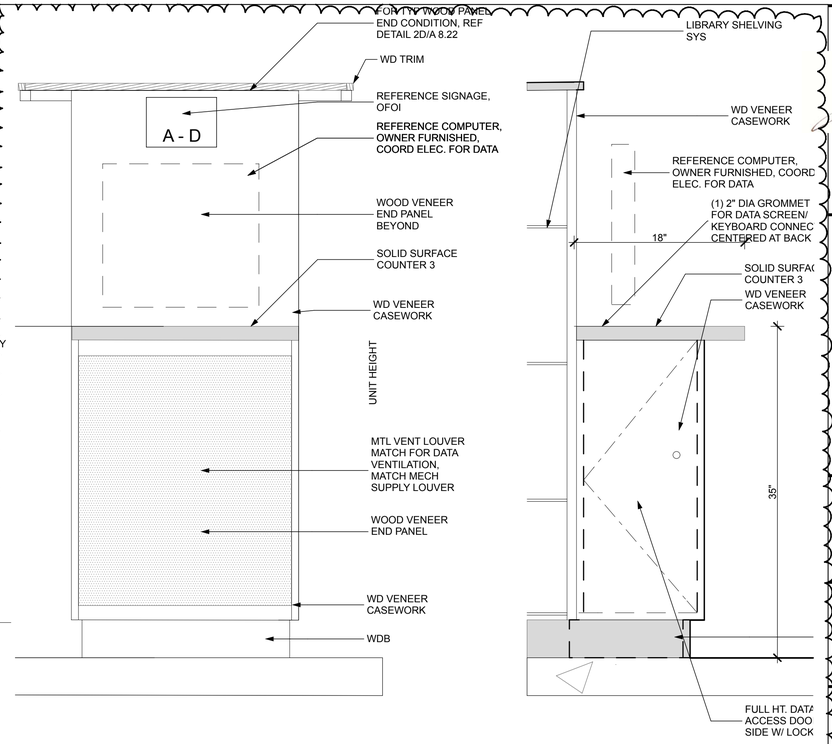

1B BOOKCASE END REF STATION
SCALE: 1 1/2"= 1'-0"

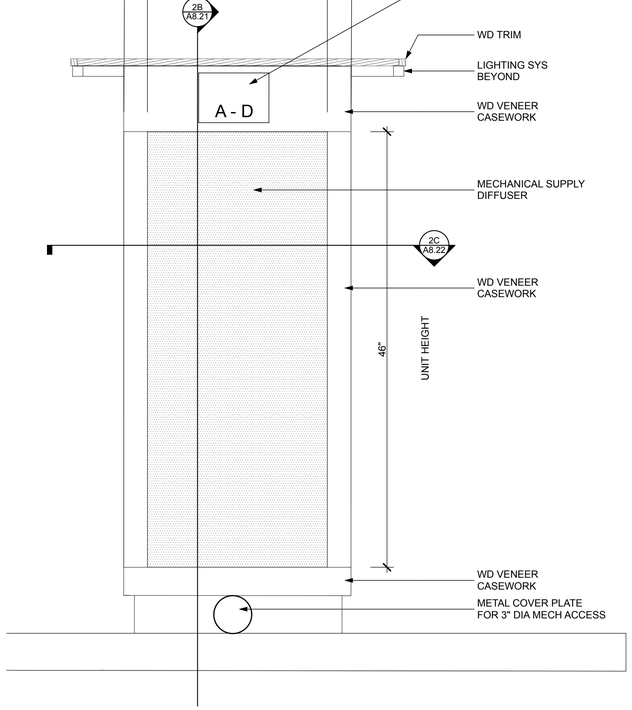

2C 60" HIGH BOOKCASE SUPPLY DIFFUSER - END ELEVATION
SCALE: 1 1/2"= 1'-0"

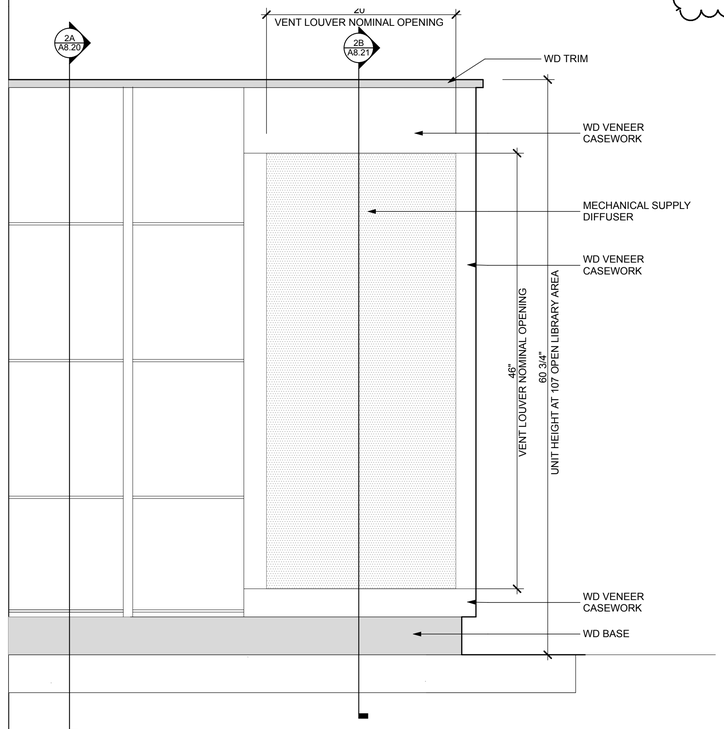

2B 60" HIGH BOOKCASE SUPPLY DIFFUSER - SIDE ELEVATION
SCALE: 1 1/2"= 1'-0"

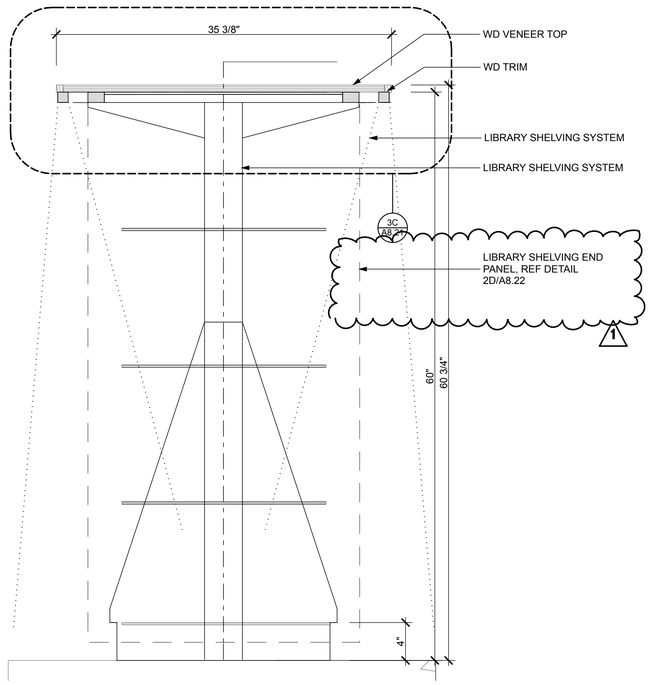

2A 60" LIBRARY SYS SHELVING SECTION
SCALE: 1 1/2"= 1'-0"

STATE OF ALASKA
49 TH
JAMES P.S. BIBB
A-9949
REGISTERED PROFESSIONAL ARCHITECT
3/3/14

100% CONSTRUCTION DOCUMENTS

NorthWind Architects LLC
126 Seward St
Juneau, AK 99801
Ph #907.586.6150
www.northwindarch.com

THA
ARCHITECTURE

1" ACTUAL

IF THE ABOVE DIMENSION DOES NOT MEASURE ONE INCH (1") EXACTLY, THIS DRAWING WILL HAVE BEEN ENLARGED OR REDUCED, AFFECTING ALL LABELED SCALES.

MENDENHALL VALLEY PUBLIC LIBRARY

CBJ Contract # E14-051
Juneau, Alaska

SHEET TITLE:
SUPPLY AIR DIFFUSER

REVISION:
1 ADDENDUM 04, 3/24/14
2 -
3 -
4 -

SHEET # A8.20
DATE: 03/03/2014

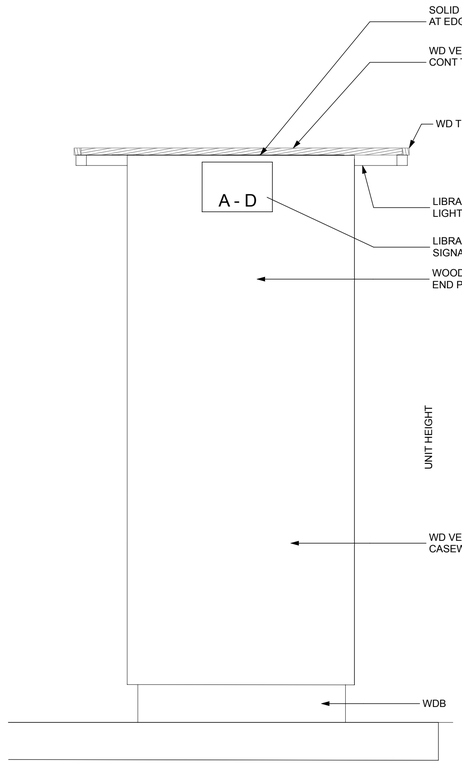

2D TYP BOOKCASE END PANEL
SCALE: 1 1/2"= 1'-0"

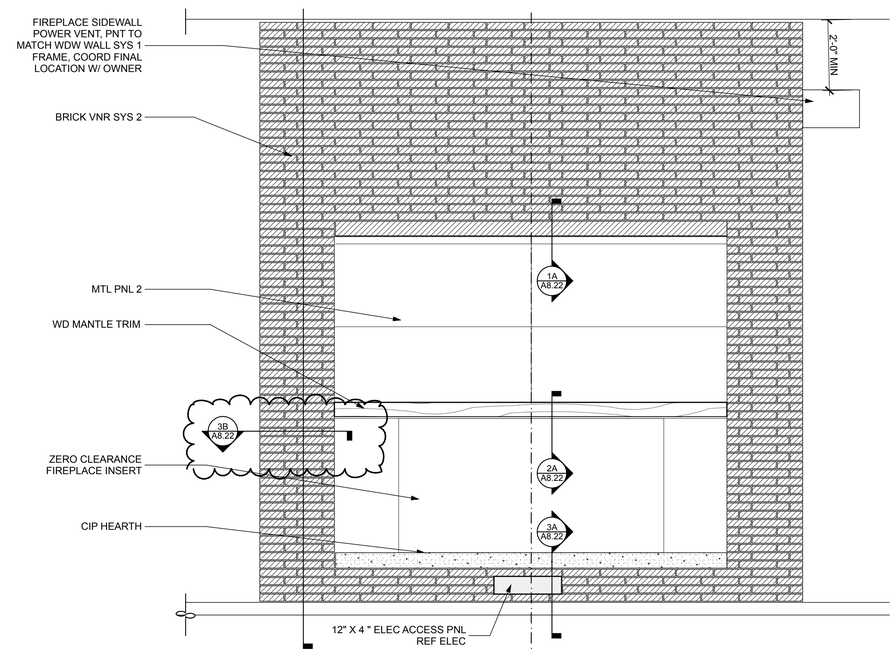

2C FIREPLACE ELEVATION AND SECTION VIEWS
SCALE: 1/2" = 1'-0"

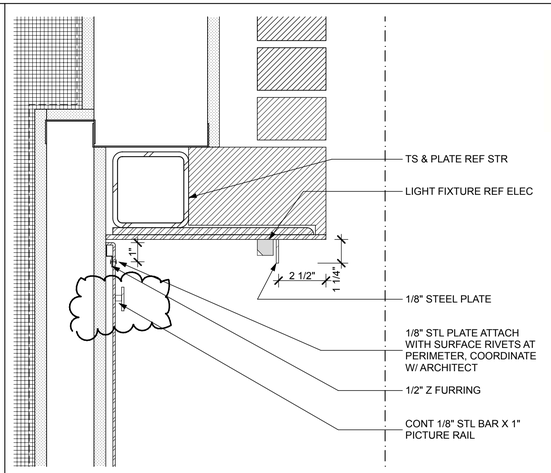

1A SECTION FIREPLACE MANTEL HEAD
SCALE: 3" = 1'-0"

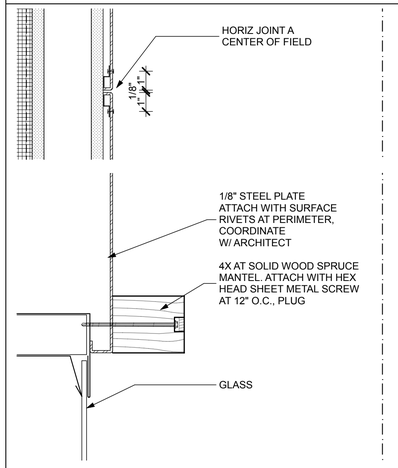

2A SECTION FIREPLACE MANTEL BASE
SCALE: 3" = 1'-0"

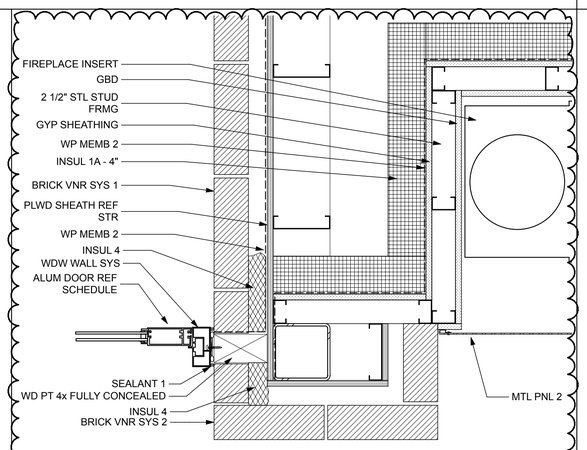

3B FIREPLACE PLAN @ CORNER
SCALE: 1 1/2"= 1'-0"

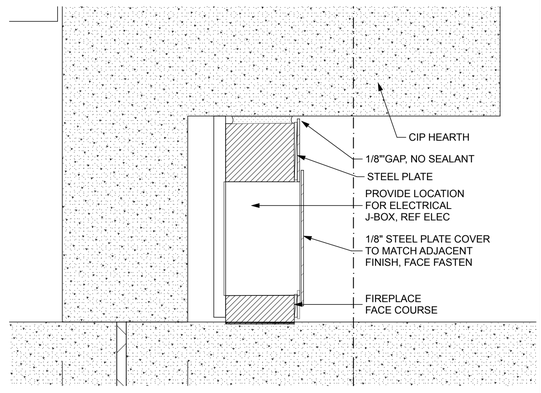

3A SECTION AT FIREPLACE ACCESS PNL
SCALE: 3" = 1'-0"

STATE OF ALASKA 49TH
JAMES F.S. BIBB A-9949
REGISTERED PROFESSIONAL ARCHITECT
3/3/14

100% CONSTRUCTION DOCUMENTS

NorthWind Architects LLC
126 Seward St
Juneau, AK 99801
Ph #907.586.6150
www.northwindarch.com

THA
ARCHITECTURE

1" ACTUAL

IF THE ABOVE DIMENSION DOES NOT MEASURE ONE INCH (1") EXACTLY, THIS DRAWING WILL HAVE BEEN ENLARGED OR REDUCED, AFFECTING ALL LABELED SCALES.

MENDENHALL VALLEY PUBLIC LIBRARY

CBJ Contract # E14-051
Juneau, Alaska

SHEET TITLE:
FIREPLACE - ALT 00

REVISION:
1 ADDENDUM 04, 3/24/14
2 -
3 -
4 -

SHEET # A8.22
DATE: 03/03/2014

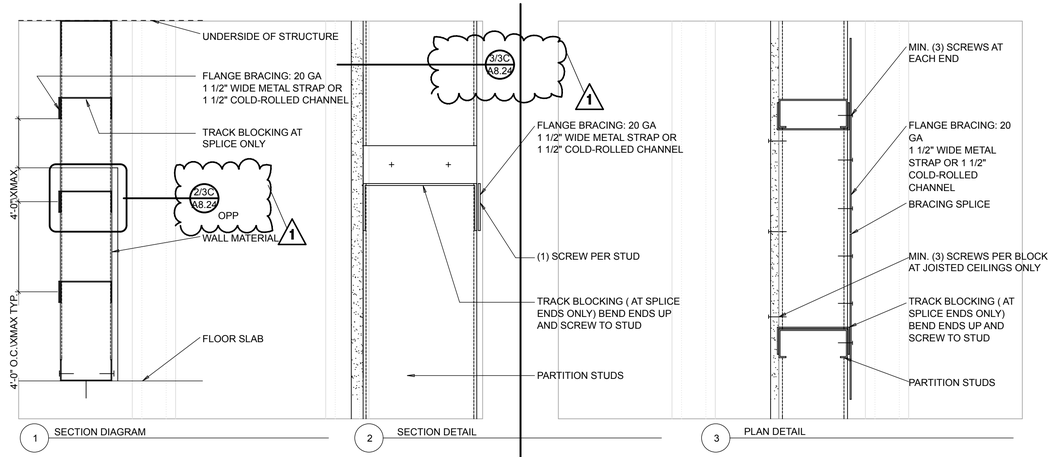

1D TYP FLANGE BRACING

NOT TO SCALE

NOTE: USE FLANGE BRACING AT 4'-0" O.C. ON SIDE(S) OF ANY PARTITIONS WHERE GYPSUM BOARD SHEATHING DOES NOT OCCUR, INCLUDING AT WALLS ABOVE THE CEILING

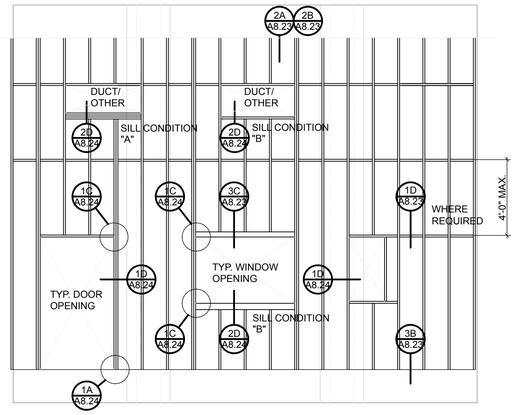

1B TYPICAL WALL AND OPENING FRAMING

SCALE: 1/4" = 1'-0"

GENERAL NOTES:

1. DETAILS SHOW MINIMUM INTERIOR FRAMING AND CONNECTION REQUIREMENTS, AND SHALL BE USED FOR BIDDING PURPOSES. DESIGN OF THESE ELEMENTS IS THE RESPONSIBILITY OF THE CONTRACTOR. DEVIATIONS MAY BE USED PROVIDED THAT SUBSTANTIATING ENGINEERING DATA IS SUBMITTED BY THE GENERAL CONTRACTOR. REFERENCE SPECIFICATIONS FOR ADDITIONAL INFORMATION.

2. CONTINUITY OF FIRE RATED WALL AND CEILING ASSEMBLIES ARE TO BE MAINTAINED IN ALL CASES AS INDICATED OR AS INFERRED IN THE CONSTRUCTION DOCUMENTS.

3. UL RATINGS NOT SHOWN IN THE CONTRACT DOCUMENTS ARE TO BE GENERATED AND SUBMITTED FOR REVIEW, AND FOR COORDINATION BY THE GENERAL CONTRACTOR.

4. THE GENERAL CONTRACTOR IS TO COORDINATE ALL ACCEPTED UL DETAILS WITH ALL ASSOCIATED TRADES AND WITH ALL APPLICABLE JURISDICTIONS.

5. FOR 'HANGING STUD' TYPE CONDITIONS FOR FASTENING DIRECTLY INTO CONCRETE CEILINGS -NOT COMPOSITE DECKS, THE EMBED TO DIAMETER RATIO IS TO BE AT LEAST 8 PROVIDING AN EMBEDMENT 8 TIMES THE DIAMETER OF THE FASTENER. ONLY ANY OF THE FOLLOWING FASTENERS IS TO BE USED FOR CONNECTIONS WITH WITHDRAWL TYPE LOADING:
1. EXPANSION TYPE ANCHOR WITH ICBO APPROVAL FOR SEISMIC USE SUCH AS HILTI KB-III.
2. SELF-TAPPING TYPE SCREW SUCH AS HILTI KWIK-CON II.
3. PRE DRILLED TYPE PAF SUCH AS HILTI DX-KWIK (REQUIRES CONTINUOUS INSPECTION).

6. COORDINATION BETWEEN INTERIOR DETAILS AND THE FIRE RATED ASSEMBLIES AND/OR SPRAY-ON FIREPROOFING ASSEMBLIES AND INSTALLATIONS IS THE RESPONSIBILTY OF THE GENERAL CONTRACTOR.

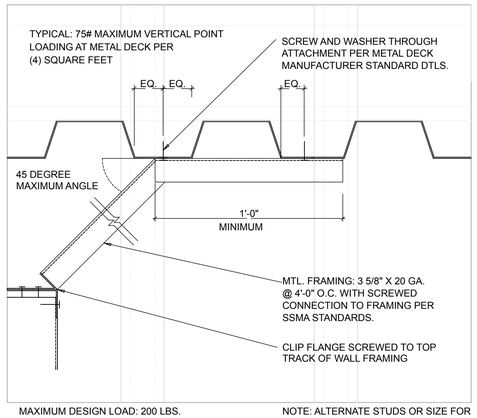

MAXIMUM DESIGN LOAD: 200 LBS.
MAXIMUM BRACING LENGTH: 6'-0"

NOTE: ALTERNATE STUDS OR SIZE FOR BOTH COMPRESSION AND TENSION LOADING

2D TRACK BRACE TO METAL DECK

NOT TO SCALE

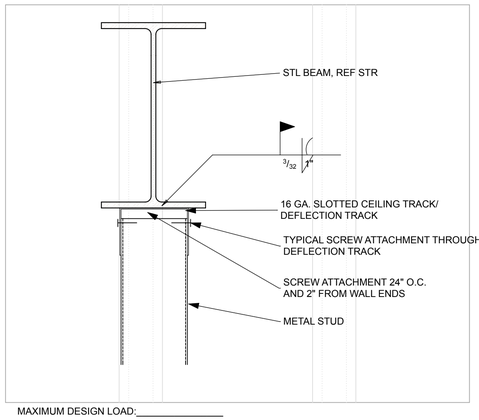

MAXIMUM DESIGN LOAD:_____

2C TYP WALL ANCHORAGE AT BEAM

NOT TO SCALE

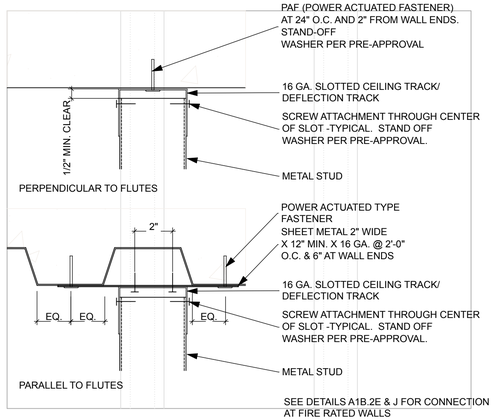

2B TYP WALL ANCHORAGE

NOT TO SCALE

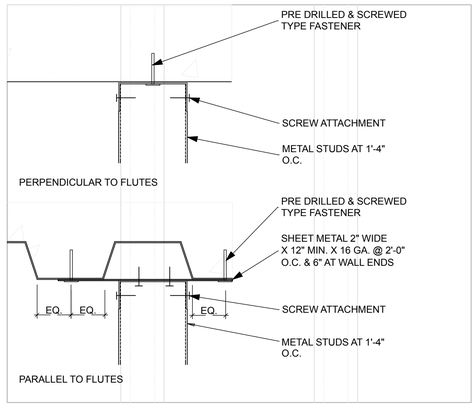

2A TYP HANGING STUDS

NOT TO SCALE

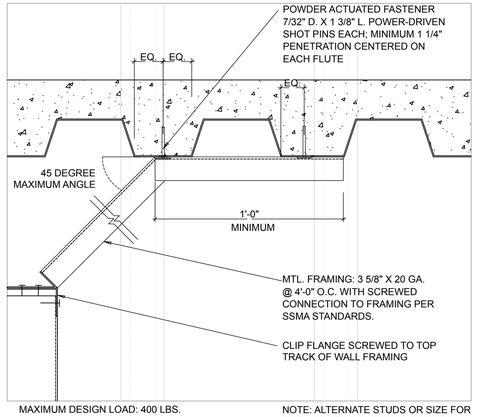

MAXIMUM DESIGN LOAD: 400 LBS.
MAXIMUM BRACING LENGTH: 6'-0"

NOTE: ALTERNATE STUDS OR SIZE FOR BOTH COMPRESSION AND TENSION LOADING

3D TRACK BRACE TO COMP DECK

NOT TO SCALE

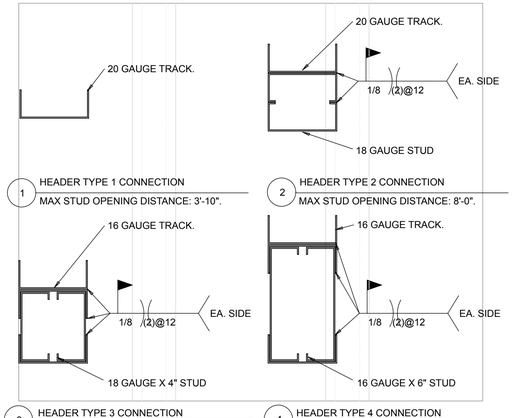

3C HEADERS AT OPENING

NOT TO SCALE

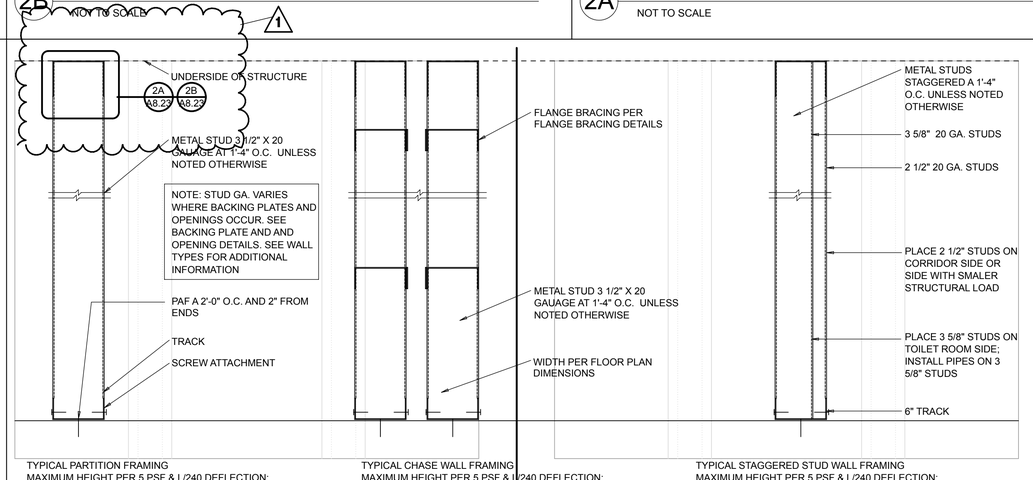

TYPICAL PARTITION FRAMING
MAXIMUM HEIGHT PER 5 PSF & L/240 DEFLECTION:
16 FT.

TYPICAL CHASE WALL FRAMING
MAXIMUM HEIGHT PER 5 PSF & L/240 DEFLECTION:
16 FT.

TYPICAL STAGGERED STUD WALL FRAMING
MAXIMUM HEIGHT PER 5 PSF & L/240 DEFLECTION:
16 FT.

3B TYP WALL FRAMING

NOT TO SCALE

NOTE: SEE TYPICAL PARTITION FRAMING DETAIL FOR TYPICAL INFORMATION

STATE OF ALASKA
49TH
JAMES F.S. BIBB
A-9949
REGISTERED PROFESSIONAL ARCHITECT
3/3/14

100% CONSTRUCTION DOCUMENTS

NorthWind Architects LLC
126 Seward St
Juneau, AK 99801
Ph #907.586.6150
www.northwindarch.com

THA
ARCHITECTURE

1" ACTUAL

IF THE ABOVE DIMENSION DOES NOT MEASURE ONE INCH (1") EXACTLY, THIS DRAWING WILL HAVE BEEN ENLARGED OR REDUCED, AFFECTING ALL LABELED SCALES.

MENDENHALL VALLEY PUBLIC LIBRARY

CBJ Contract # E14-051

Juneau, Alaska

SHEET TITLE:
TYPICAL FRAMING DETAILS

REVISION:
1 ADDENDUM 04, 3/24/14
2 -
3 -
4 -

SHEET # A8.23

DATE: 03/03/2014

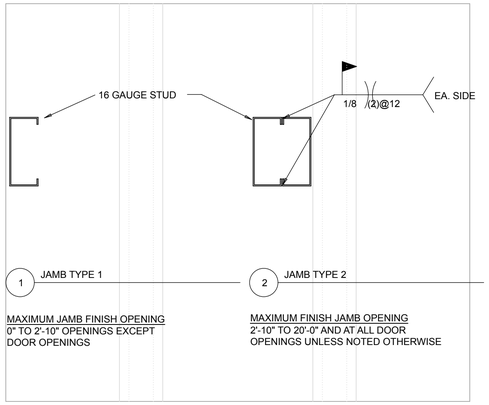

1D JAMB AT OPENINGS

NOT TO SCALE

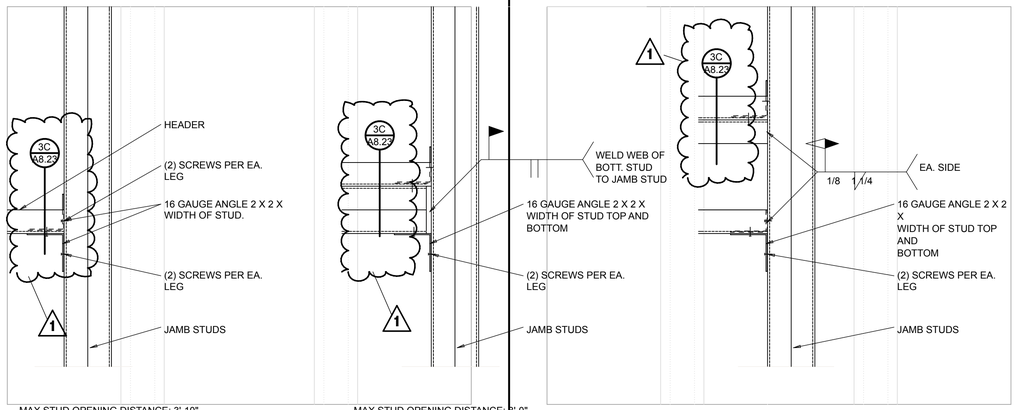

1C CONNECTIONS AT OPENINGS

NOT TO SCALE

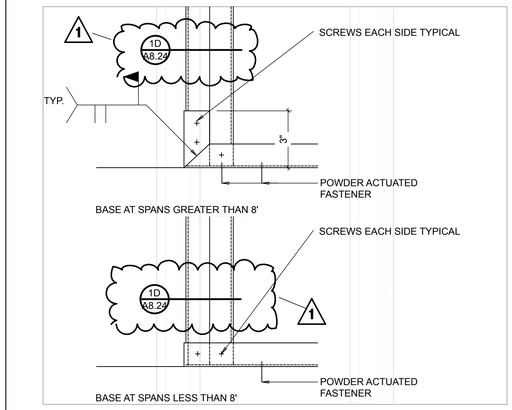

1A OPENING FRAMING

NOT TO SCALE

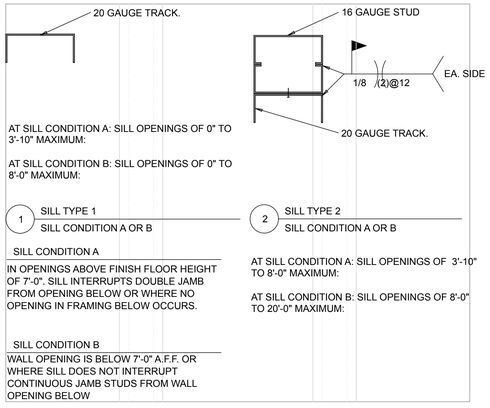

2D SILL AT OPENINGS

NOT TO SCALE

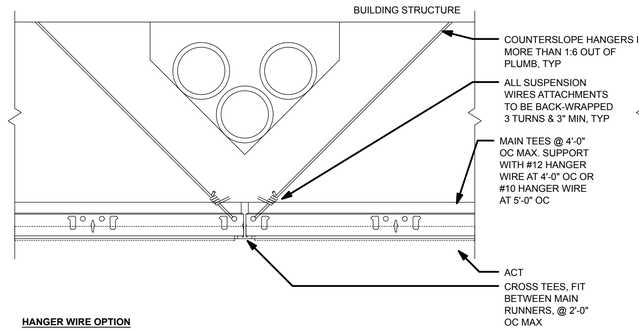

2C TYPICAL CEILING DETAILS

SCALE: 3" = 1'-0"

TYPE 1B: SCREW STUD BACKING PLATE

AT WALLS WITHOUT PLYWOOD PANELS:

BASE AND WALL CABINETS AND SHELVES

SHOWER SEATS

HANDRAILS

GRAB BARS

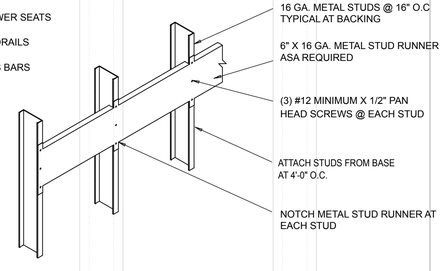

NOTE:
1. EXTEND BACKING PLATE TYPE 1 ACROSS (3) STUDS MINIMUM
2. EXTEND ALL BACKING PLASTES TO LAST STUD BEYOND COMPONENT
3. DO NOT CUT WALL STUD FLANGES
4. FOR VERTICAL BACKING PLATE LOCATIONS AT CASEWORK SEE CABINET SECTION DIAGRAM

MAXIMUM DESIGN LOAD: 250 LBS./STUD

3D BACKING PLATE

NOT TO SCALE

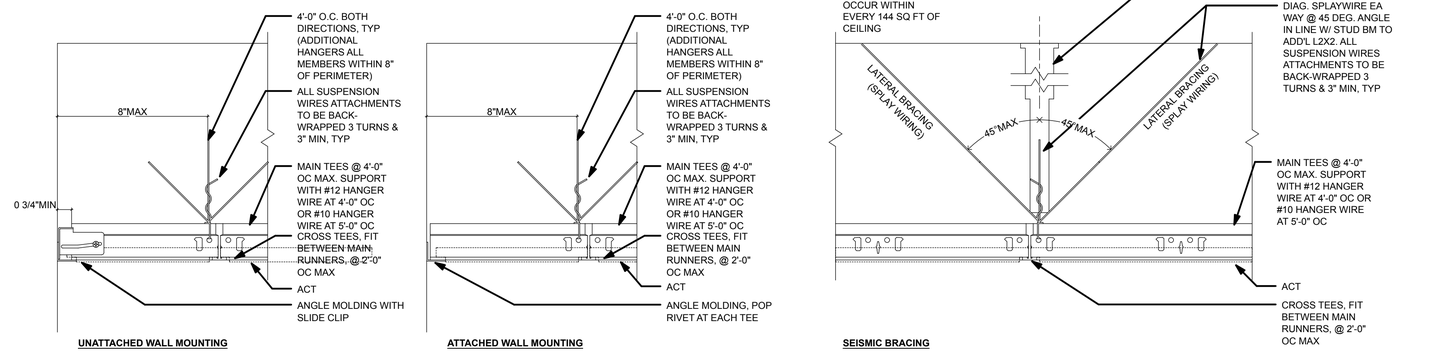

3C TYPICAL CEILING DETAILS

SCALE: 3" = 1'-0"

STATE OF ALASKA
49 TH
JAMES F.S. BIBB
A-9949
REGISTERED PROFESSIONAL ARCHITECT
3/3/14

100% CONSTRUCTION DOCUMENTS

NorthWind Architects LLC
126 Seward St
Juneau, AK 99801
Ph #907.586.6150
www.northwindarch.com

THA
ARCHITECTURE

1" ACTUAL

IF THE ABOVE DIMENSION DOES NOT MEASURE ONE INCH (1") EXACTLY, THIS DRAWING WILL HAVE BEEN ENLARGED OR REDUCED, AFFECTING ALL LABELED SCALES.

MENDENHALL VALLEY PUBLIC LIBRARY

CBJ Contract # E14-051
Juneau, Alaska

SHEET TITLE:
TYPICAL FRAMING DETAILS / CEILING DETAILS

REVISION:
1 ADDENDUM 04, 3/24/14
2 -
3 -
4 -

SHEET #
A8.24

DATE:
03/03/2014

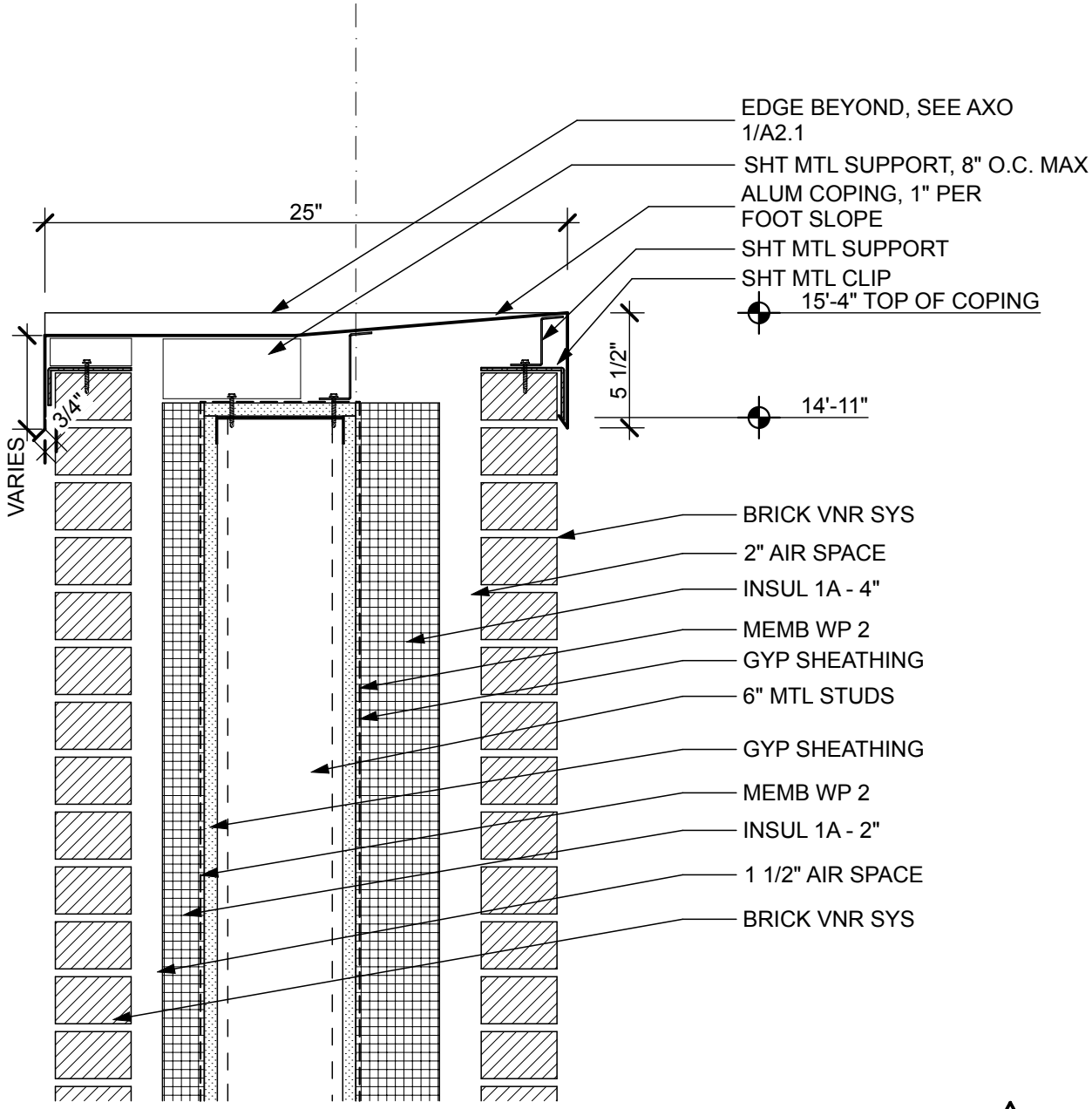

1B COPING FIN WALL END

SCALE: 1 1/2"= 1'-0"

1

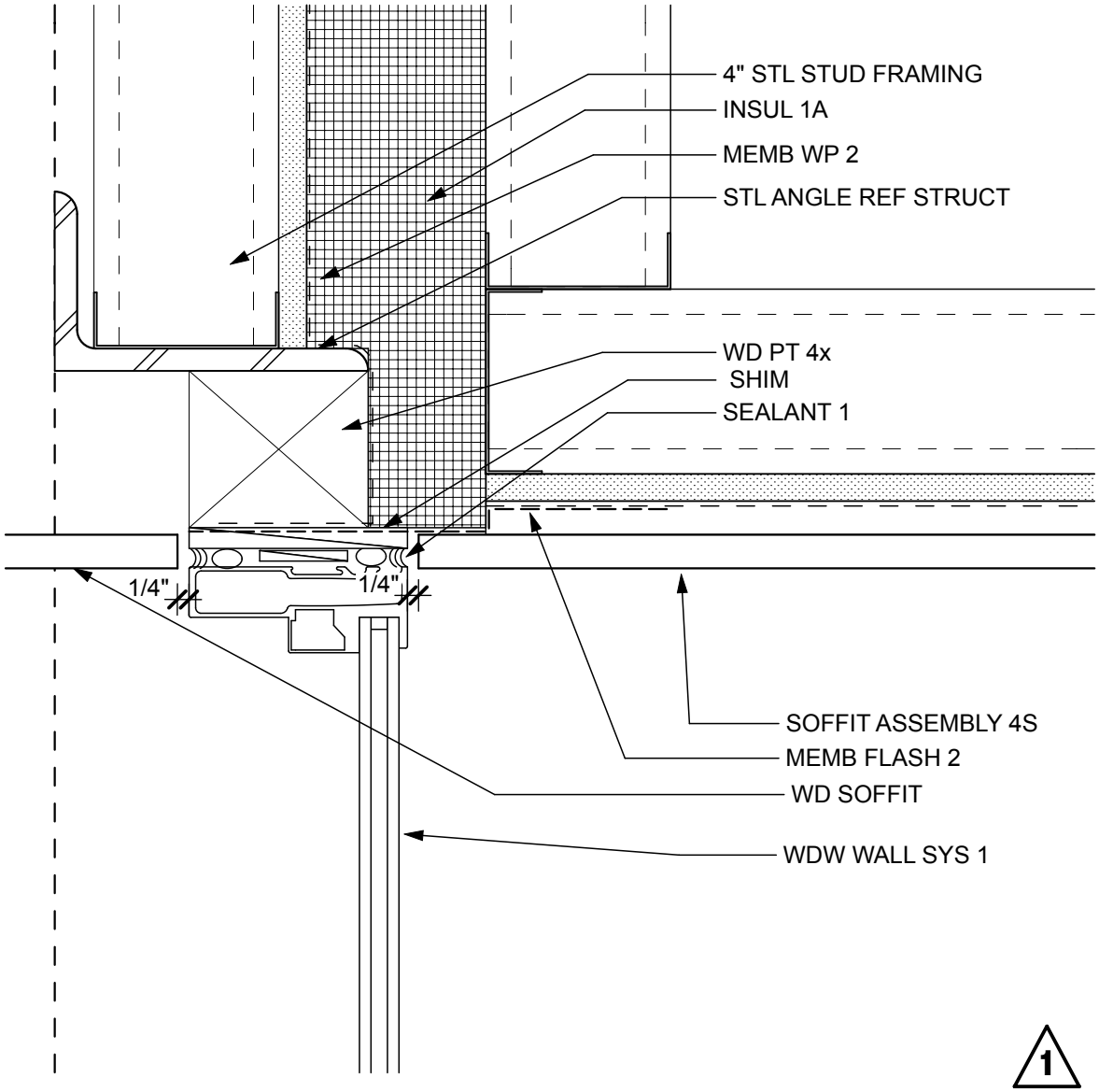

1D WDW HEAD @ GRID 5

SCALE: 3" = 1'-0"

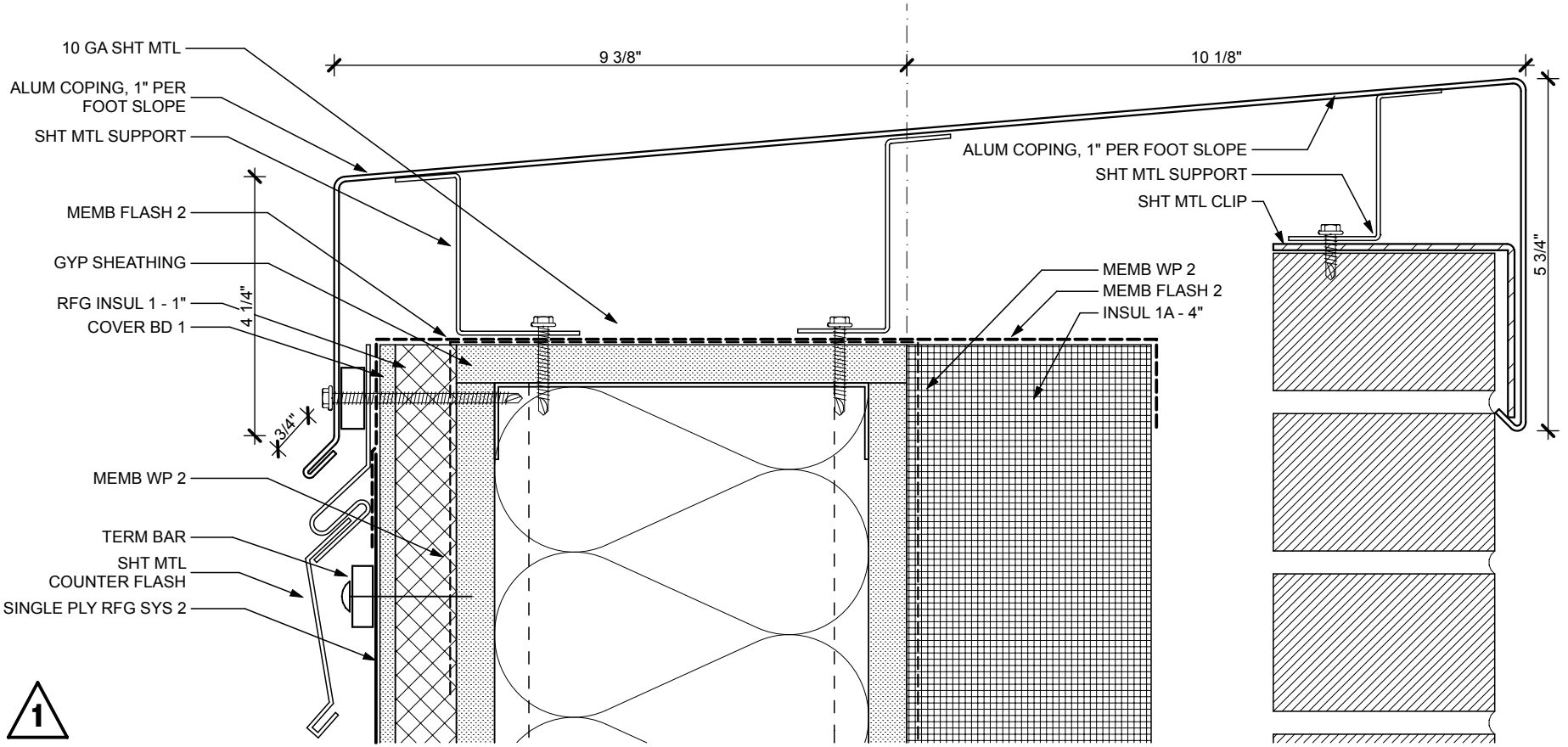

1B COPING

NOT TO SCALE

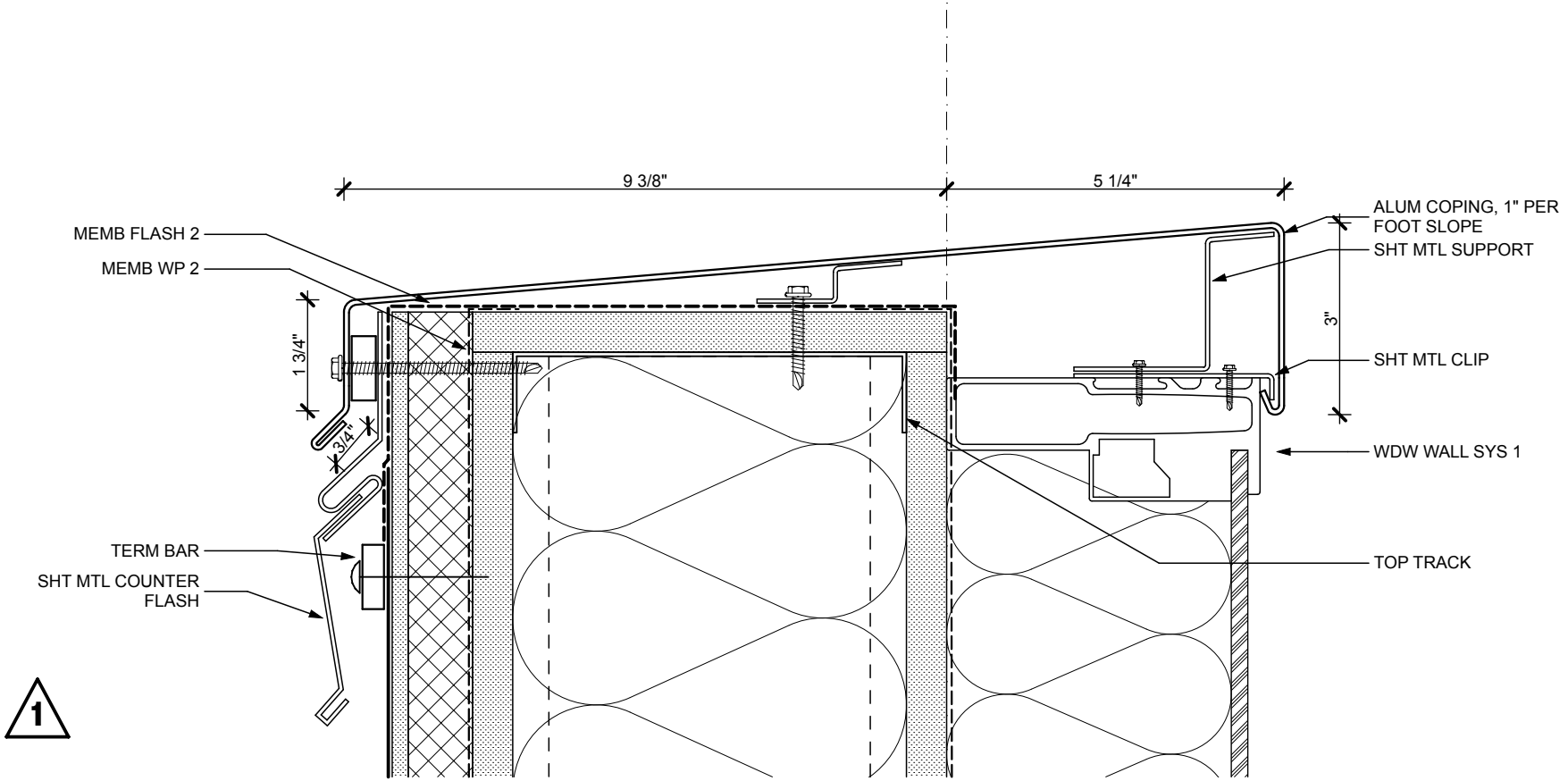

2B COPING

NOT TO SCALE

N W

2B/A9.9 REVISED

MENDENHALL VALLEY PUBLIC LIBRARY
CBJ Contract # E14-051

JUNEAU, ALASKA
DATE: 03/21/2014
ADDENDA 04 DETAIL # 11

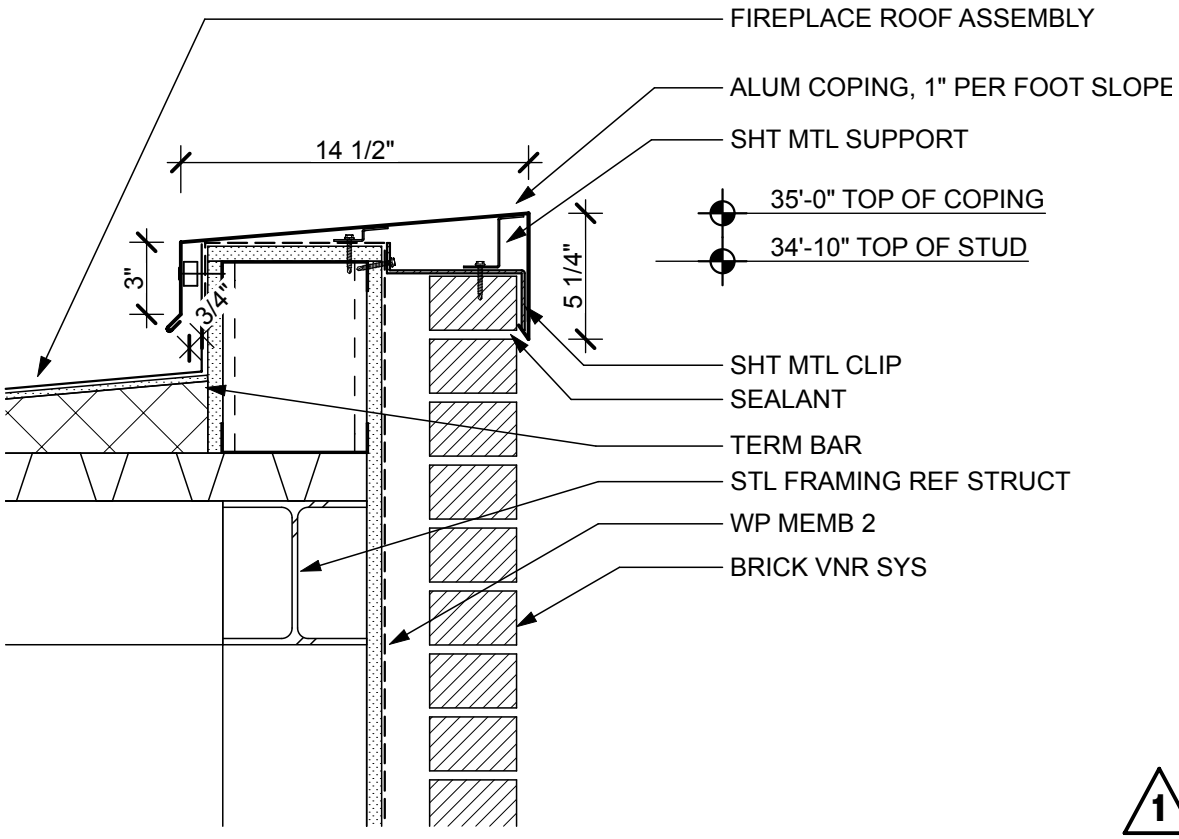

1A

FIREPLACE COPING

SCALE: 1 1/2"= 1'-0"

1

0 6" 12" 18"

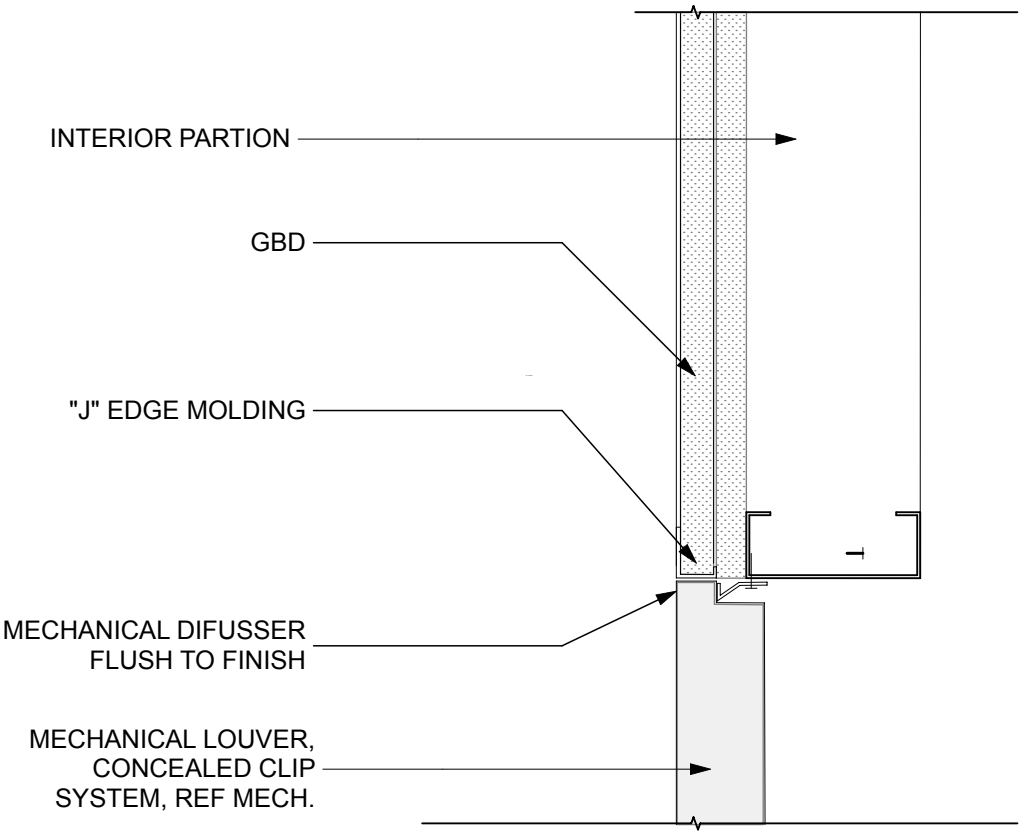

1 MECH DIFUSSER AT GBD

SCALE: 3" = 1'-0"

1

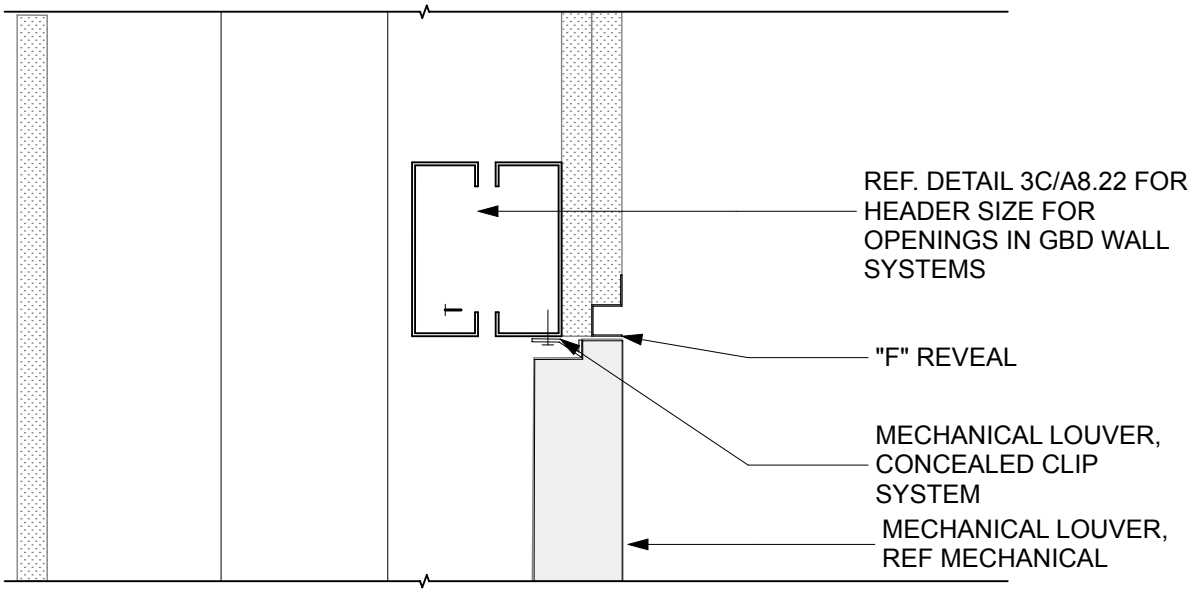

1 MECH SUPPLY DIFUSSER - HEAD

SCALE: 3" = 1'-0"

1

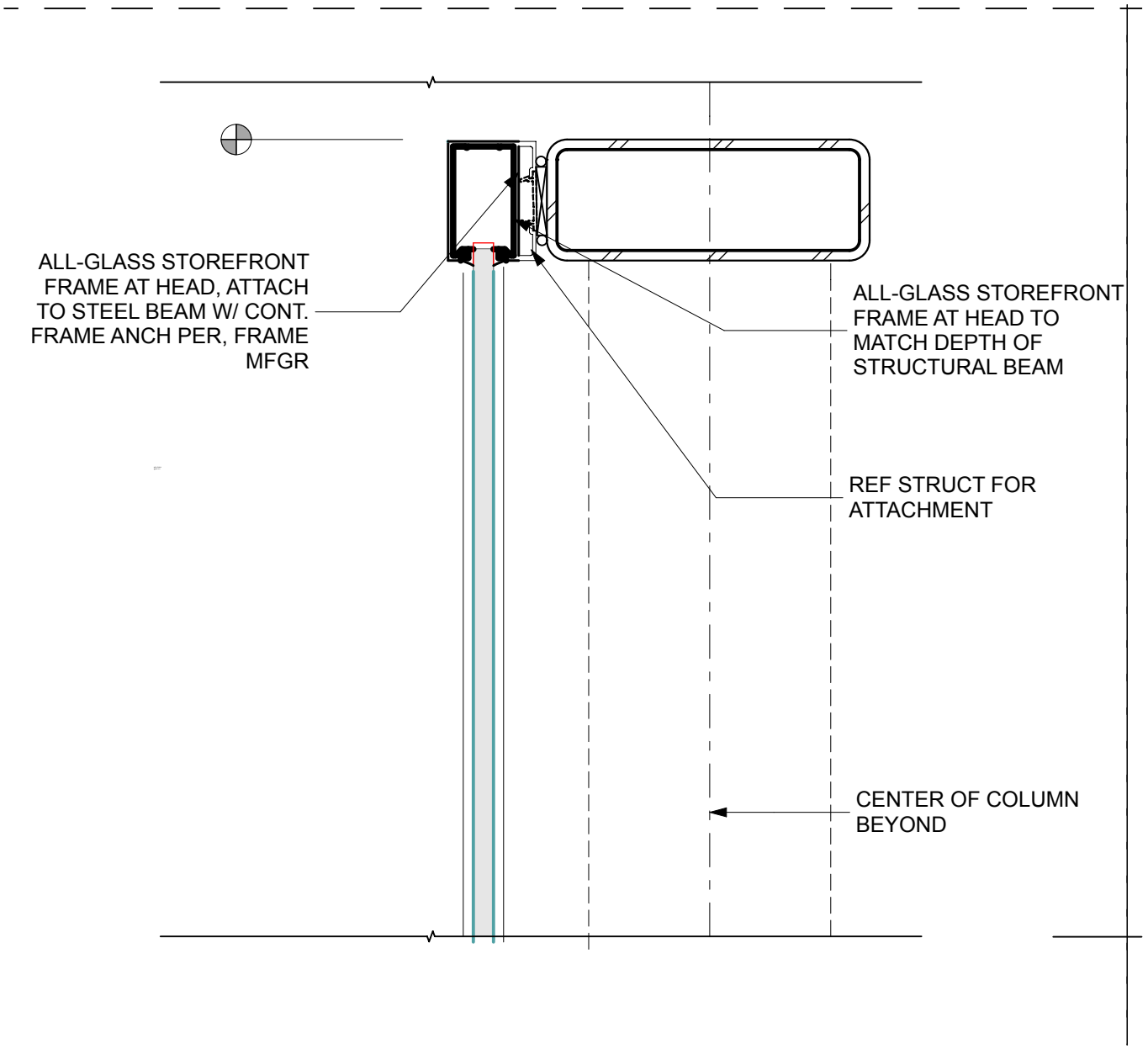

1 FRAMELESS GLASS SYS HED AT RM 116

SCALE: 3" = 1'-0"

1

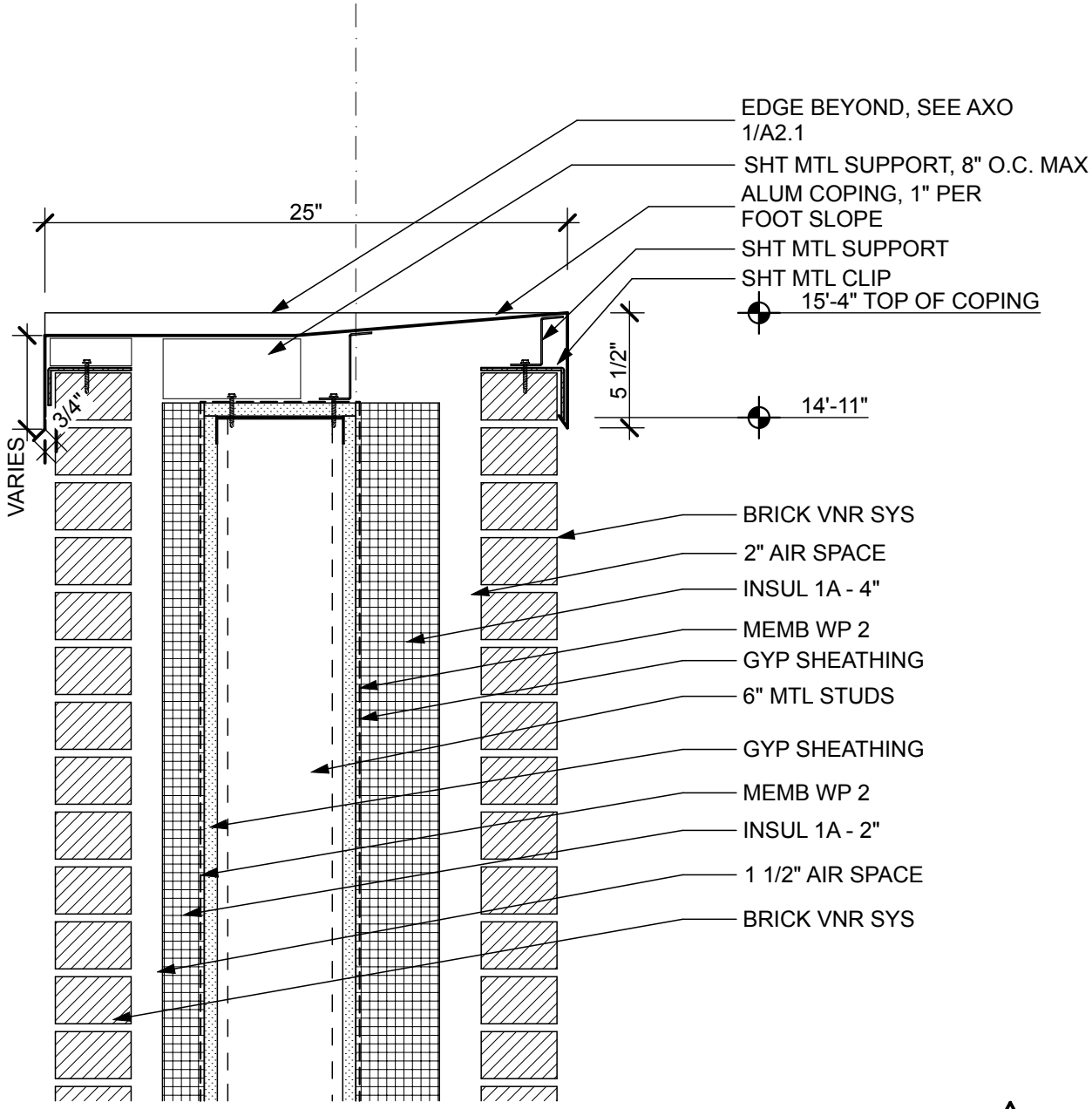

1B COPING FIN WALL END

SCALE: 1 1/2"= 1'-0"

1

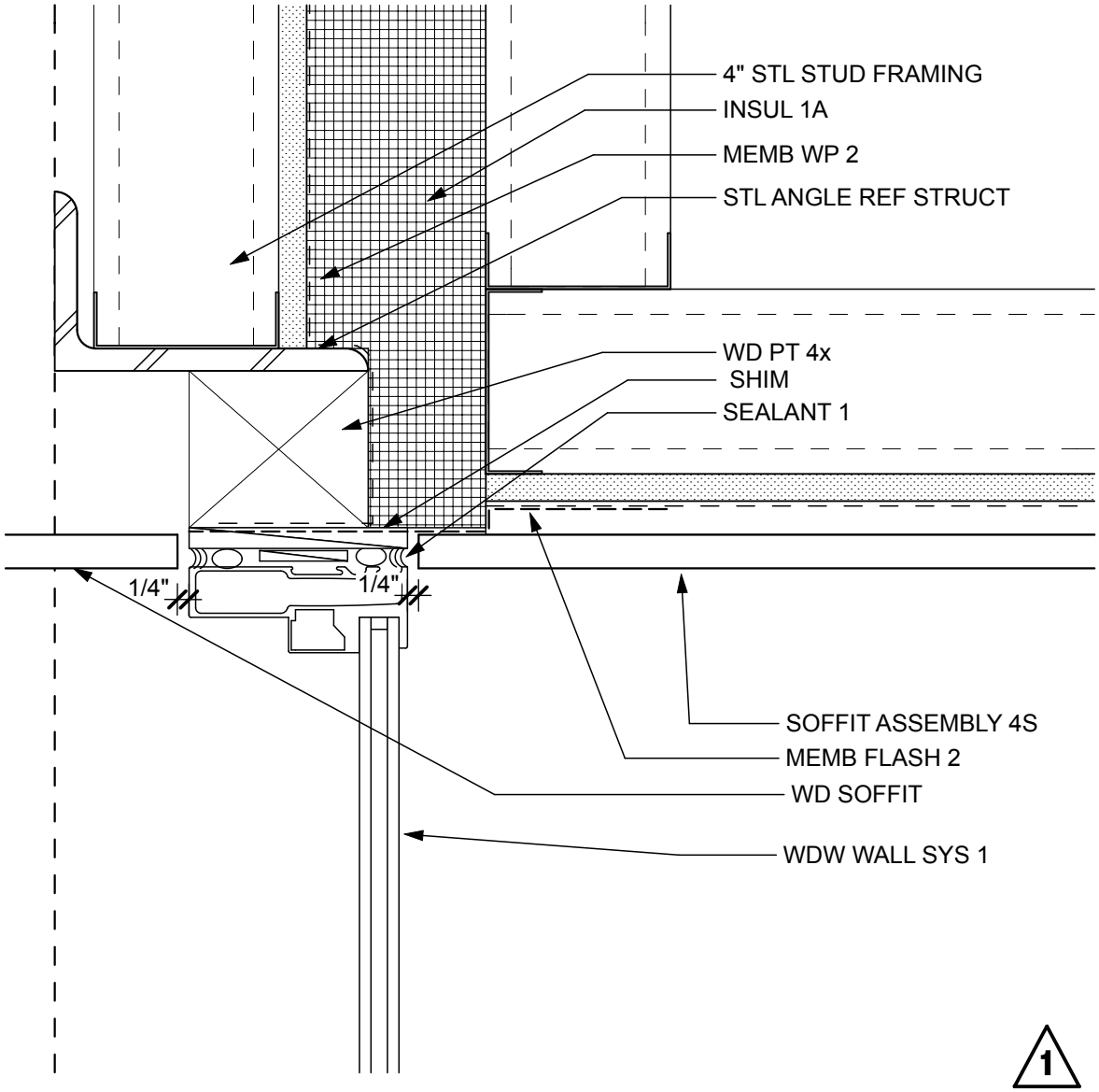

1D WDW HEAD @ GRID 5

SCALE: 3" = 1'-0"

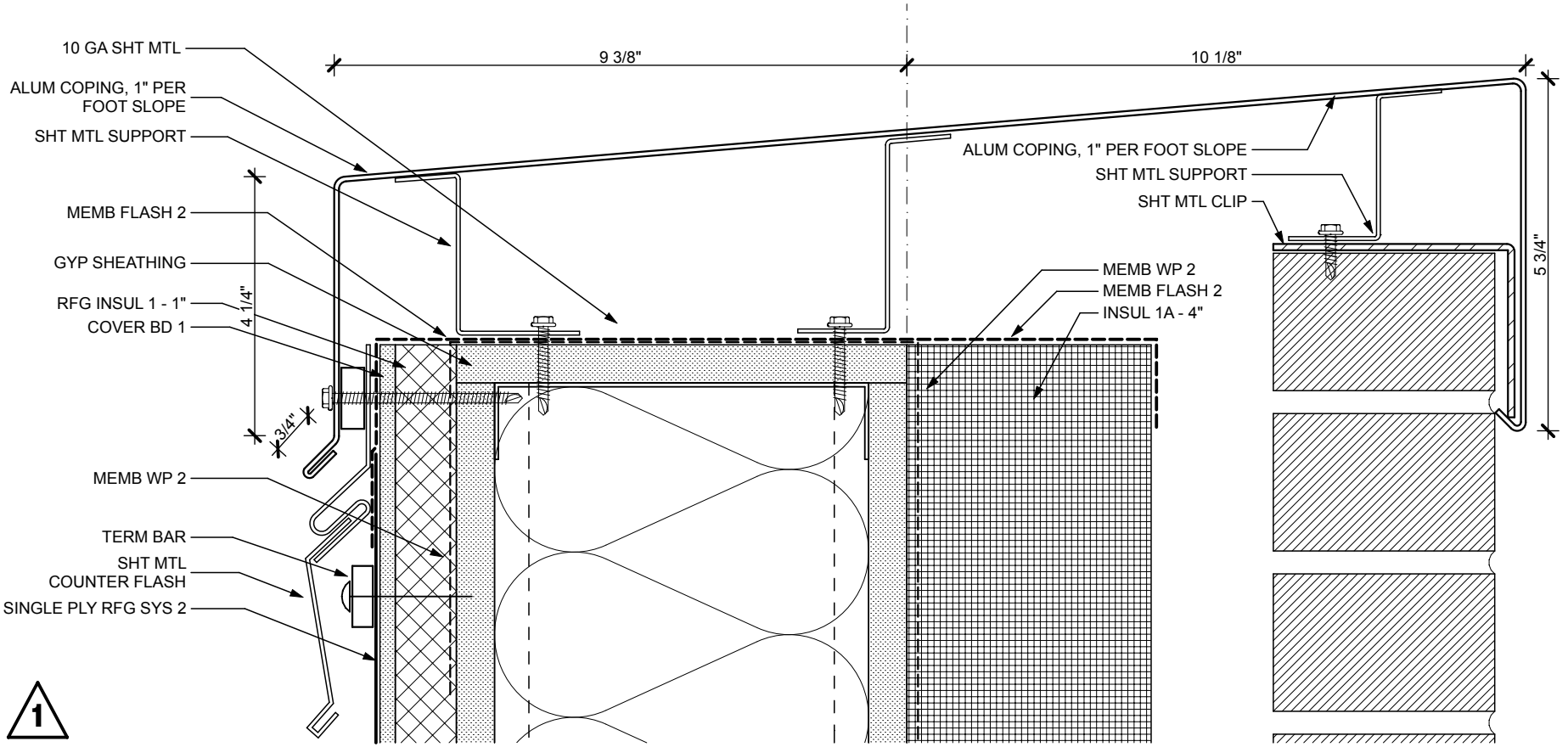

1B COPING

NOT TO SCALE

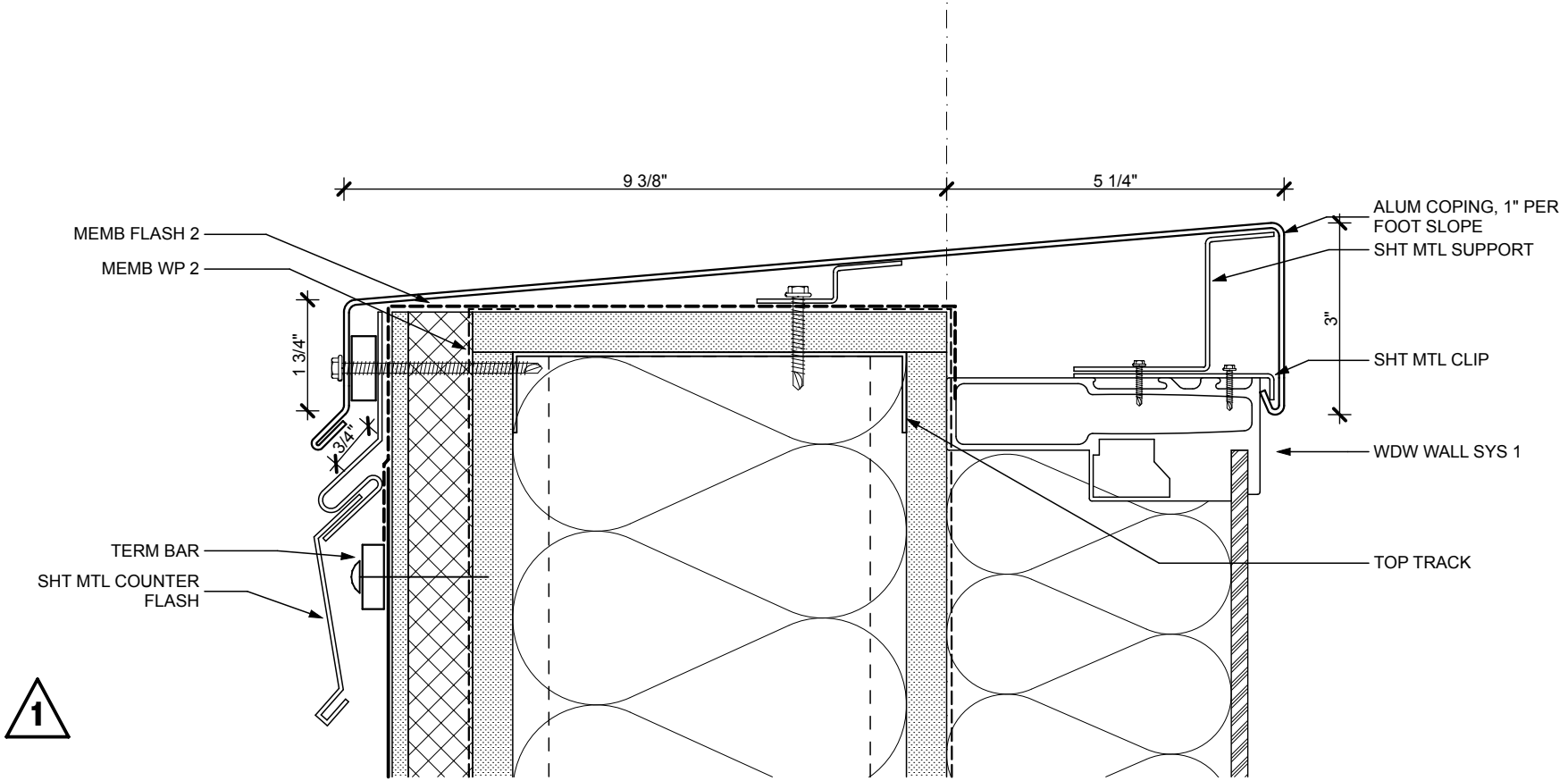

2B COPING

NOT TO SCALE

N W

2B/A9.9 REVISED

MENDENHALL VALLEY PUBLIC LIBRARY
CBJ Contract # E14-051

JUNEAU, ALASKA
DATE: 03/21/2014
ADDENDA 04 DETAIL # 11

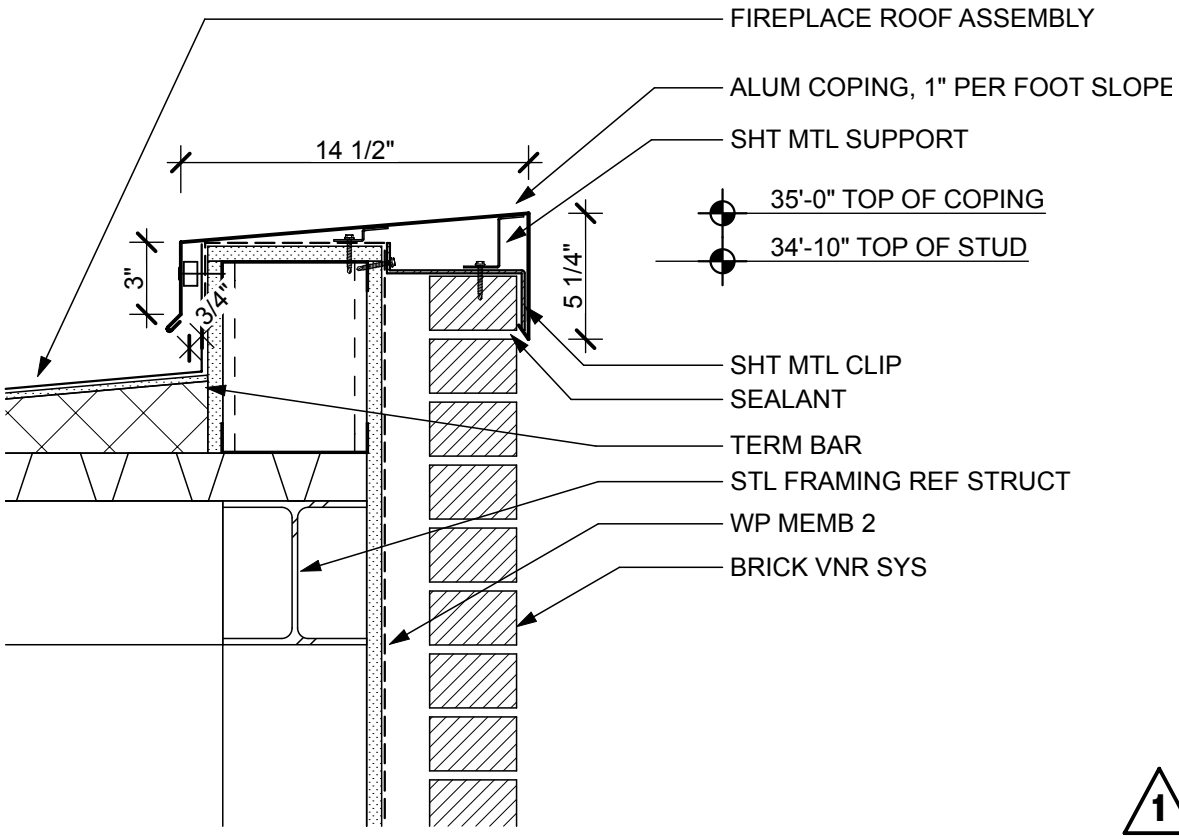

1A

FIREPLACE COPING

SCALE: 1 1/2"= 1'-0"

1

0 6" 12" 18"