ENGINEERING DEPARTMENT

ADDENDUM TO THE CONTRACT

for the

Mendenhall Valley Public Library
Contract No. E14-051

ADDENDUM NO.: **TWO**

CURRENT DEADLINE FOR BIDS:
April 2, 2014

PREVIOUS ADDENDA: **ONE**

ISSUED BY: City and Borough of Juneau
ENGINEERING DEPARTMENT
155 South Seward Street
Juneau, Alaska 99801

DATE ADDENDUM ISSUED: **March 20, 2014**

The following items of the contract are modified as herein indicated. All other items remain the same. This addendum has been issued and is posted online. Please refer to the CBJ Engineering Contracts Division webpage at: http://www.juneau.org/engineering_ftp/contracts/Contracts.php

PROJECT MANUAL:

Item No. 1 SECTION 221005 – PLUMBING PIPING, PART 1 - GENERAL, Article 1.2 – RELATED REQUIREMENTS

Paragraph B: ***Delete*** in its entirety and ***replace*** it with the following:

Section 079005 – Joint Sealers

Paragraph D: ***Delete*** in its entirety and ***replace*** it with the following:

Section 099000 – Paints and Coatings

Item No. 2 SECTION 223000 – PLUMBING EQUIPMENT, PART 2 - PRODUCTS, Article 2.2 – HEATING WATER STORAGE TANKS (ST-1)

Paragraph D – ***Change*** "(4)" in first sentence ***to read*** "(5)".

Paragraph D – After the fifth sentence, ***Add*** the following sentence:

(1) 3-inch opening shall be installed on left hand side of manway (when looking at manway) as high as possible.

Paragraph D – At the end of the paragraph, ***Add*** the following sentence:

Air vent shall be installed on top of tank.

Item No. 3 SECTION 230926 – BUILDING AUTOMATION SYSTEM AND AUTOMATIC CONTROLS

PART 1 - GENERAL, Article 1.6 – ACCEPTABLE MANUFACTURERS, ***Add*** the following paragraph:

E. Automated Logic Corporation

Item No. 4 SECTION 230926 – BUILDING AUTOMATION SYSTEM AND AUTOMATIC CONTROLS, PART 3 - EXECUTION, Article 3.8 – SEQUENCE OF OPERATIONS

Paragraph A.5. – ***Change*** "110F" in first sentence ***to read*** "120F". ***Change*** "120F" in second sentence ***to read*** "140F".

Paragraph B.2. – ***Change*** "110F" in third sentence ***to read*** "125F".

Paragraph C – ***Change*** "105F" in second sentence ***to read*** "115F".

Paragraph C.1.b – ***Delete*** paragraph C.1.b in its entirety and replace it with the following:

Operate lead GSHP to maintain storage tank, ST-1, heating supply inlet temperature setpoint (per reset schedule).

Paragraph C.1.c. – ***Change*** "110F" in third sentence ***to read*** "125F". ***Change*** "108F" in last sentence ***to read*** "120F".

Paragraph C.2.a – ***Delete*** "(100F)" from sentence.

Paragraph N.2. – ***Replace*** radiant temperature reset schedule with the following:

OSA at 0F and below	Radiant Supply Temp at 110F
OSA at 50F and above	Radiant Supply Temp at 90F

Item No. 5 SECTION 232113 – HYDRONIC PIPING, PART 3 - EXECUTION, Article 3.2 – INSTALLATION

Paragraph AD - Radiant Tubing, sub paragraph 2 – ***Change*** "100F" ***to read*** "110F".

Paragraph AD - Radiant Tubing – ***Add*** the following sub paragraphs:

7. Route tubing around bookshelves and built-in casework as shown. See M3.X drawings for routing.
8. Do not route tubing through isolation joints at columns. See structural drawings for additional information.
9. 5/8-inch radiant tubing shall be installed on top of and secured to rebar in center of concrete slab. Verify minimum ¾-inch height of concrete over top of tubing.

Fasten tubing to rebar every 2-3 feet.

10. Route tubing below slab at concrete expansion joints as required by radiant tubing manufacturer. Alternate method of sleeving tubing through fibrous expansion joint acceptable (minimum 6-inches each side of expansion joint).
11. Insulate radiant tubing with ½-inch thick closed cell insulation sleeve where manifold tubing enters concrete slab. Caulk and seal penetrations.
12. Insulate radiant tubing with ½-inch thick closed cell insulation where tubing is closer than 3-inches on center where near manifolds. Tubing in this area only shall be installed below rebar to allow for insulation. After tubing is greater than 3-inches apart, tubing shall be located on top of rebar as noted in #9 above.
13. Protect radiant tubing where crossing beneath walls. Route under doorways wherever possible.
14. Keep radiant tubing 4-inches from walls.
15. Install radiant tubing per manufacturer's requirements.

DRAWINGS:

Item No. 6 DRAWING SHEET M0.1 SYMBOLS AND SCHEDULES, EQUIPMENT SCHEDULE, HEATING WATER STORAGE TANK, ST-1

Change "(4) Piping connections as shown" ***to read*** "(5) Piping connections as shown".

Item No. 7 DRAWING SHEET M1.2 FOUNDATION PARTIAL PLAN B

Delete M1.2 FOUNDATION PARTIAL PLAN B in its entirety and ***replace*** with the attached M1.2 FOUNDATION PARTIAL PLAN B, labeled Addendum No. 2 and dated March 19, 2014, for modified RL pipe routing.

Item No. 8 DRAWING SHEET M2.2 MAIN LEVEL PARTIAL PLAN B

Delete M2.2 MAIN LEVEL PARTIAL PLAN B in its entirety and ***replace*** with the attached M2.2 MAIN LEVEL PARTIAL PLAN B, labeled Addendum No. 2 and dated March 19, 2014, for modified RL pipe routing.

Item No. 9 DRAWING SHEET M3.0 RADIANT OVERALL PLAN, RADIANT HEATING SCHEDULE

Change column header "ESTIMATED AVERAGE TUBE LENGTH FT" ***to read*** "ESTIMATED AVERAGE TUBE LENGTH FT PER LOOP".

Item No. 10 DRAWING SHEET C4.0, TYPICAL SECTIONS:

Delete C4.0 TYPICAL SECTIONS in its entirety and ***replace*** with the attached C4.0 TYPICAL SECTIONS, labeled Addendum No. 2 and dated March 19, 2014.

Item No. 11 DRAWING SHEET C4.2, CONSTRUCTION DETAILS:

Delete C4.2 CONSTRUCTION DETAILS in its entirety and ***replace*** with attached C4.2

Item No.12 DRAWING SHEET C4.4, CONSTRUCTION DETAILS, Detail No. 5, Accessible Emergency Access Detail, Base Bid:

Revise detail note call to read "4" Depth Base Course Grading D-1, Compact to 95%, See Landscape".

Item No.13 DRAWING SHEET L1.0 Landscape Architecture Site Plan, PAVING SURFACES LEGEND:

Change "Colored Concrete, Davis Color: Light Grey 8084" ***to read*** "Concrete".

SITE LAYOUT AND SOILS PLAN – BASE BID:

Change "Colored Concrete (Typ.)" ***to read*** "Concrete (Typ.)".

Item No. 14 DRAWING SHEET L1.1 LANDSCAPE ARCHITECTURE SITE AND SOILS PLAN, SITE LAYOUT AND SOILS PLAN – ADDITIVE ALTERNATE 1:

Change Rolled Gravel Path as included in Base Bid to Colored Concrete (Typ.) for Additive Alternate 1.

Add note "Colored Concrete (Typ.)"

Item No. 15 DRAWING SHEET L4.1 LANDSCAPE ARCHITECTURE PLANS

Change "Colored Concrete (Typ.)" notes to "Concrete (Typ.)"

By: _____
Greg Smith, Contract Administrator

Total number of pages contained within this Addendum: 8

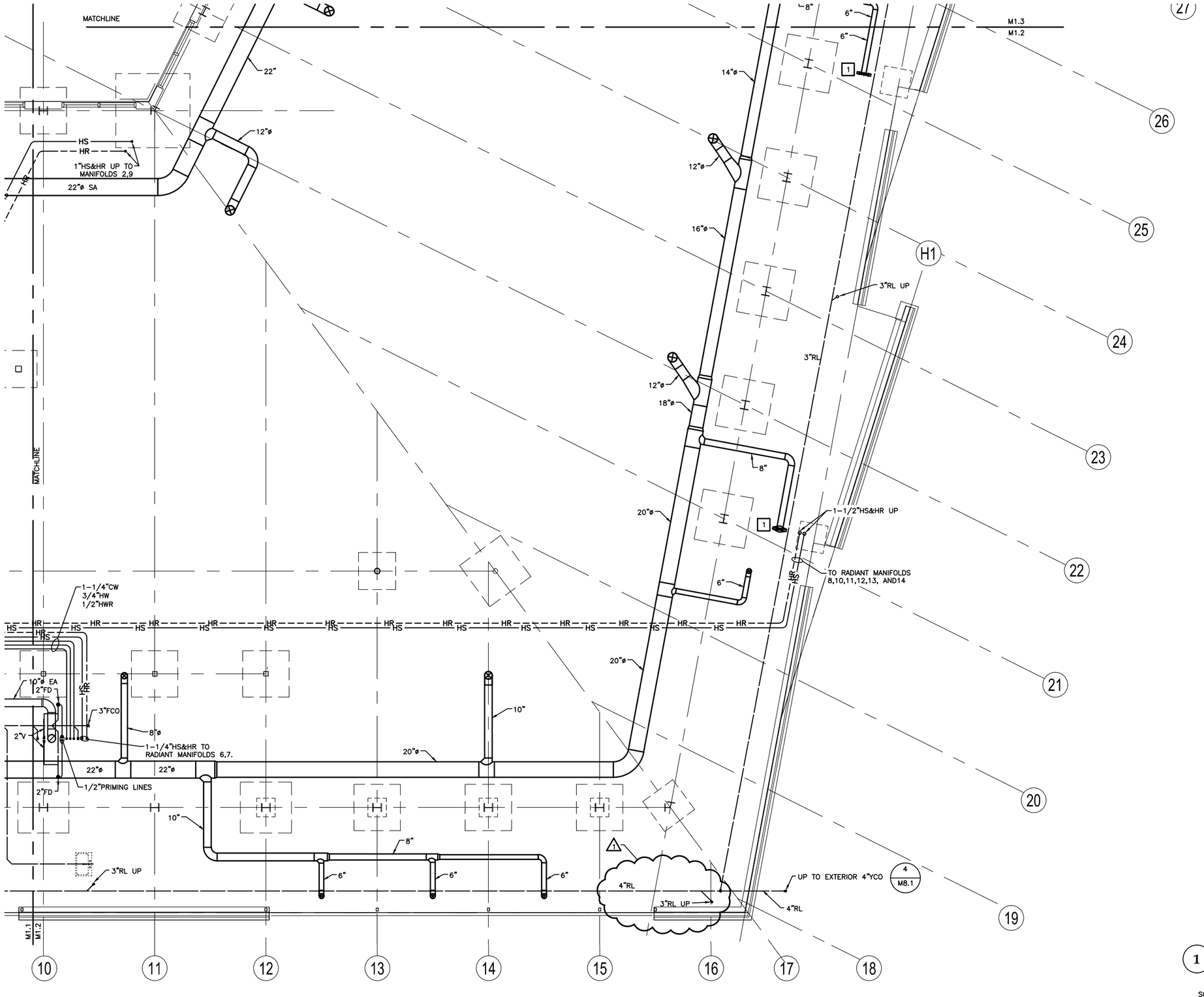

SHEET NOTES:

1. SLOPE ALL DUCTWORK DOWN TO SERVICE 105 PIT AT 0.5% SLOPE.
2. SLOPE WASTE PIPING AT 1/4" PER FOOT.
3. FINISHED FLOOR ELEVATION = 30.10'. SEE CIVIL.
4. SLOPE 3-INCH RAIN LEADER PIPING AT 1/4" PER FOOT. SLOPE 4-INCH RAIN LEADER PIPING AT 1/8" PER FOOT.
5. ALL BRANCH DUCTS SERVING DIFFUSER SHALL HAVE BALANCING DAMPER IMMEDIATELY ABOVE OR BELOW SLAB ON GRADE. ADJUSTMENT ACCESSIBLE THROUGH WALL, CASEWORK ACCESS PLATE. WHERE ACCESS PLATE IS OPEN TO AIR PLENUM, INSTALL GASKET.

CONSTRUCTION NOTES:

1. ROUND TO RECTANGULAR UNDERGROUND DUCTWORK TRANSITION. COORDINATE WITH DIFFUSER REQUIREMENTS.

1 FOUNDATION PARTIAL PLAN B

SCALE: 0 2' 4' 8' 16'

PROJECT NORTH

STATE OF ALASKA
49th
DOUGLAS H. MURRAY
ME 7870
REGISTERED PROFESSIONAL ENGINEER
ISSUE DATE: 03-19-2014

NorthWind Architects LLC
126 Seward St
Juneau, AK 99801
Ph #907.586.6150
www.northwindarch.com

MURRAY & ASSOCIATES P.C.
CONSULTING MECHANICAL ENGINEERS
P O BOX 21081
JUNEAU, AK 99802
TEL: 907 780-6151
FAX: 907 780-6182

1" ACTUAL

IF THE ABOVE DIMENSION DOES NOT MEASURE ONE INCH (1") EXACTLY, THIS DRAWING WILL HAVE BEEN ENLARGED OR REDUCED, AFFECTING ALL LABELED SCALES.

MENDENHALL VALLEY PUBLIC LIBRARY

CBJ Contract # E14-051
Juneau, Alaska

SHEET TITLE:
FOUNDATION PARTIAL PLAN B

REVISION:
1 ADDENDUM 02, 3/19/14
2
3
4

SHEET #
M1.2

DATE: 3/3/2014

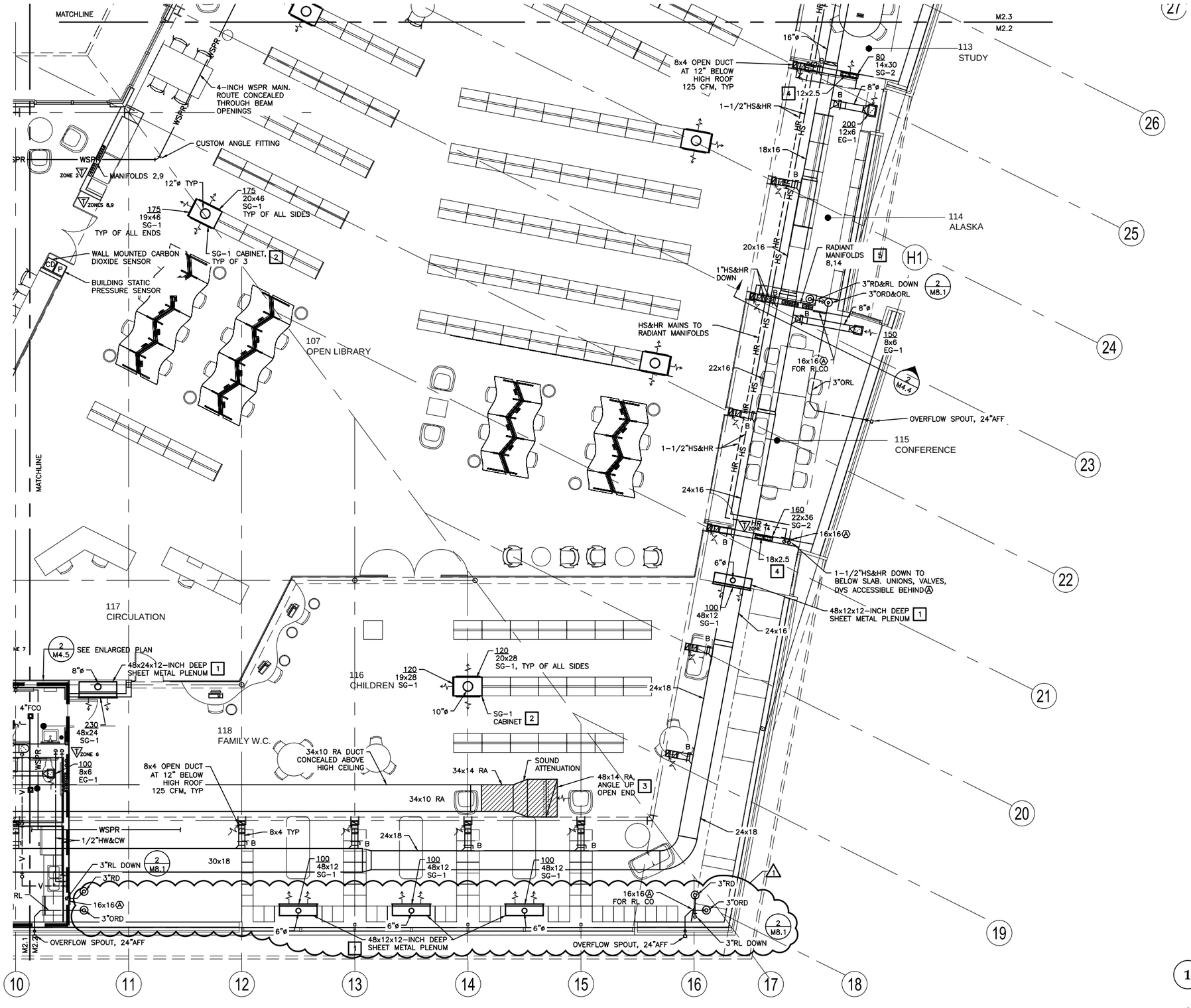

SHEET NOTES:

1. ALL BRANCH DUCTS SERVING DIFFUSER SHALL HAVE BALANCING DAMPER IMMEDIATELY ABOVE OR BELOW SLAB ON GRADE. REMOTE ADJUSTMENT ACCESSIBLE THROUGH WALL, CASEWORK ACCESS PLATE. WHERE ACCESS PLATE IS OPEN TO AIR PLENUM, INSTALL GASKET.

CONSTRUCTION NOTES:

1. INSTALL SHEET METAL PLENUM IN WALL CAVITY BEHIND DISPLACEMENT DIFFUSER. SOUND ATTENUATE ENTIRE DUCT PLENUM WITH 1/2-INCH THICK DUCT LINING. VERIFY EXACT SHEET METAL PLENUM SIZE WITH FRAMING DETAILS, CASEWORK SHOP DRAWINGS, ARCHITECT, AND GENERAL CONTRACTOR PRIOR TO FABRICATION. BELOW GRADE DUCT SHALL EXTEND APPROXIMATELY 3-INCHES ABOVE PLENUM FLOOR.
2. SOUND ATTENUATE ENTIRE CASEWORK AIR PLENUM WITH 1/2-INCH THICK DUCT LINING. BELOW GRADE DUCT SHALL EXTEND APPROXIMATELY 3-INCHES ABOVE PLENUM FLOOR.
3. ADJUST DUCT VOLUME ABOVE STORAGE 103.
4. DUCT TRANSITION BETWEEN DIFFUSER PLENUM AND UNDERGROUND DUCTWORK. COORDINATE REQUIREMENTS WITH DIFFUSER AND DUCTWORK MANUFACTURERS.
5. INSTALL PRESSURE GAGE AT MANIFOLD 8.

1 MAIN LEVEL PARTIAL PLAN B

SCALE: 0 2' 4' 8' 16'

PROJECT NORTH

STATE OF ALASKA — 49th — DOUGLAS H. MURRAY — ME 7870 — REGISTERED PROFESSIONAL ENGINEER
ISSUE DATE: 03-19-2014

NorthWind Architects LLC
126 Seward St
Juneau, AK 99801
Ph #907.586.6150
www.northwindarch.com

MURRAY & ASSOCIATES P.C.
CONSULTING MECHANICAL ENGINEERS
P O BOX 21081 JUNEAU, AK 99802
TEL: 907 780-6151 FAX: 907 780-6182

1" ACTUAL

IF THE ABOVE DIMENSION DOES NOT MEASURE ONE INCH (1") EXACTLY, THIS DRAWING WILL HAVE BEEN ENLARGED OR REDUCED, AFFECTING ALL LABELED SCALES.

MENDENHALL VALLEY PUBLIC LIBRARY

CBJ Contract # E14-051
Juneau, Alaska

SHEET TITLE:
MAIN LEVEL
PARTIAL PLAN B

REVISION:
1 ADDENDUM 02, 3/19/14
2
3
4

SHEET # M2.2

DATE: 3/3/2014

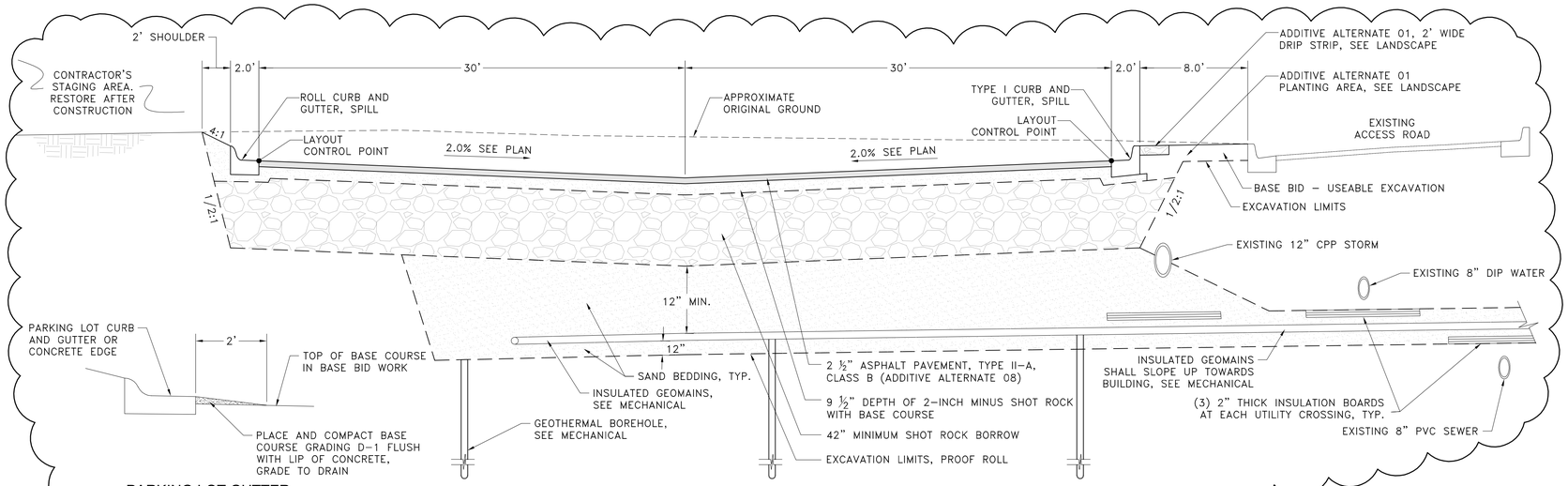

PARKING LOT GUTTER PROTECTION DETAIL - BASE BID

N.T.S.

1 PARKING LOT TYPICAL SECTION

N.T.S.

TYPICAL SECTION NOTES:

1. ADDITIVE ALTERNATE 08 INVOLVES ASPHALT PAVING AND STRIPING OF PARKING LOT.
2. UNDERGROUND ELECTRICAL, CONDUIT, LIGHT BASES, STORM PIPE AND STORM STRUCTURES NOT SHOWN FOR CLARITY. SEE SITE PLAN SHEETS FOR APPROXIMATE LOCATIONS.
3. TOP OF ASPHALT PAVEMENT SHALL BE ¼–INCH ABOVE THE TOP EDGE OF CONCRETE GUTTER, EXCEPT SPILL CURB WHICH NEW ASPHALT SHALL BE FLUSH WITH CURB LIP.
4. ALL FILL AREAS BEYOND SUBCUT LIMITS SHALL BE BACKFILLED WITH SUITABLE MATERIAL FROM EXCAVATION.
5. SUBCUT DEPTH IS SUBJECT TO REVISION BY THE ENGINEER, DEPENDENT ON EXISTING SUBSURFACE CONDITIONS. IF ORGANIC OR OTHER UNSUITABLE MATERIALS ARE FOUND TO EXIST AT, OR NEAR THE PLANNED SUBCUT LEVEL, ADDITIONAL EXCAVATION AND BACKFILL MAY BE REQUIRED.
6. CONTRACTOR TO PROVIDE MIN. 2" DEPTH OF BASE COURSE GRADING D–1 BENEATH ALL CURB AND GUTTER.
7. ADDITIONAL EXCAVATION IS REQUIRED FOR THE GEOTHERMAL LOOPFIELD WORK; SEE MECHANICAL SHEETS M7.1 AND M7.2 FOR LOCATIONS AND DETAILS.
8. CONCRETE TABLETOP AND CONCRETE RAMPS TO BE COLORED CONCRETE, DAVIS COLOR, LIGHT GRAY 8084 OR APPROVED EQUAL.

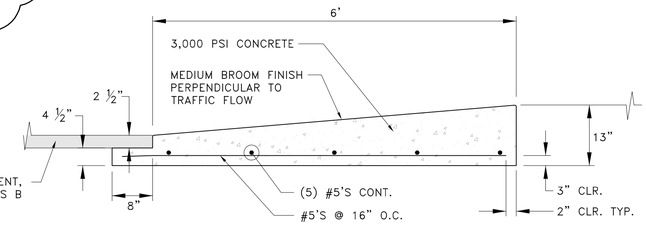

DETAIL "A"

N.T.S.

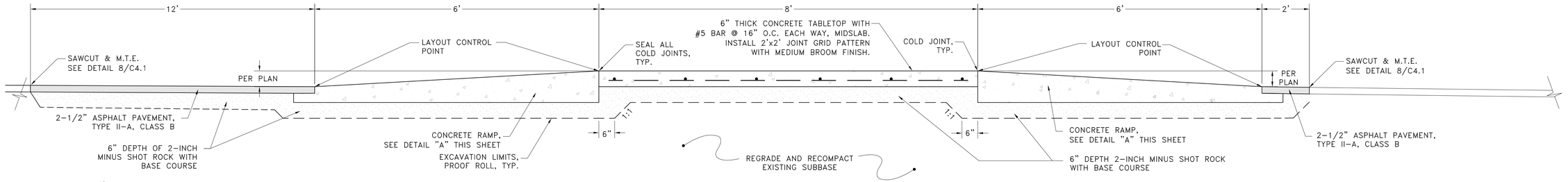

2 TABLETOP CROSSWALK SECTIONS AT PLAZA WALK

N.T.S.

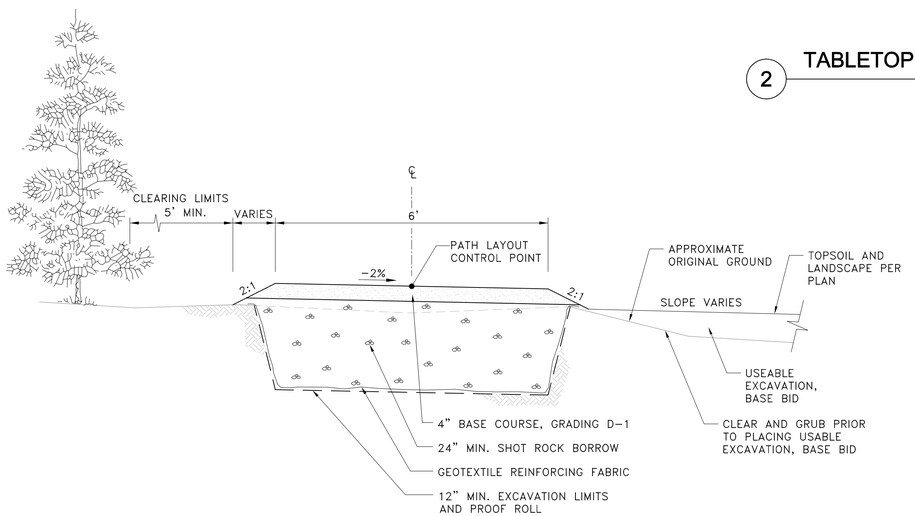

3 PATH TYPICAL SECTION (ADDITIVE ALTERNATE 01)

N.T.S.

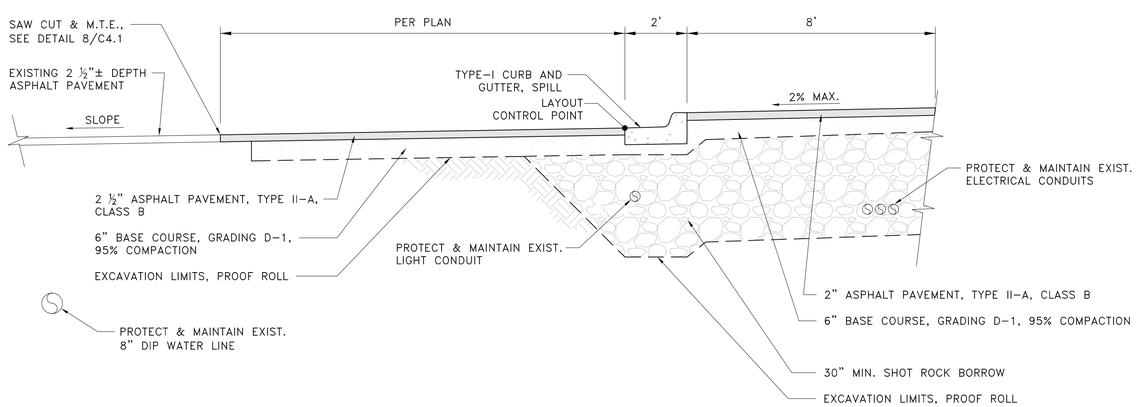

4 DROP-OFF ZONE TYPICAL SECTION

N.T.S.

STATE OF ALASKA 49TH
Joseph M. Pusich CE 8152
REGISTERED PROFESSIONAL ENGINEER
3–19–14

NorthWind Architects LLC
126 Seward St
Juneau, AK 99801
Ph #907.586.6150
www.northwindarch.com

THA ARCHITECTURE

1" ACTUAL

IF THE ABOVE DIMENSION DOES NOT MEASURE ONE INCH (1") EXACTLY, THIS DRAWING WILL HAVE BEEN ENLARGED OR REDUCED, AFFECTING ALL LABELED SCALES.

MENDENHALL VALLEY PUBLIC LIBRARY

CBJ Contract # E14-051

Juneau, Alaska

SHEET TITLE:

TYPICAL SECTIONS

REVISION:
1 ADD. No. 2, 3/19/2014
2
3
4

SHEET # C4.0

DATE: 03/03/2014

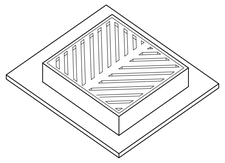

FRAME & GRATE PER SHEET C0.1

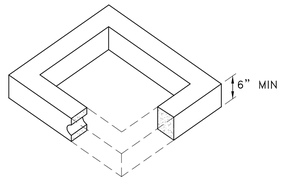

CONCRETE SECTION

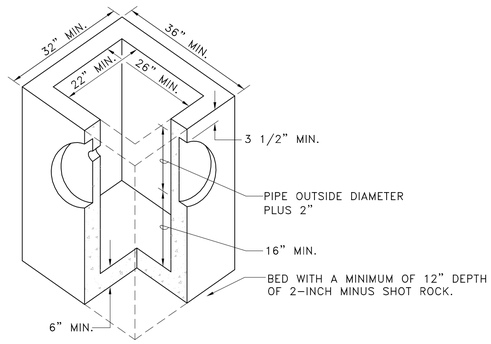

CATCH BASIN NOTES

1. ALL JOINTS BETWEEN SECTIONS AND BETWEEN FRAME AND CONCRETE SECTIONS SHALL BE GROUTED INSIDE AND OUTSIDE.
2. ENTIRE KNOCKOUT IS TO BE REMOVED AND SEALED SHUT AROUND PIPE. ALL PIPES ARE TO EXTEND MIN. 1" AND MAX. 2" INTO CATCH BASIN.
3. FRAME AND GRATE SHALL BE DUCTILE IRON. FRAME MAY BE CAST INTO THE TOP UNIT OR PLACED OVER THE OPENING AS APPROVED BY THE ENGINEER. FRAME AND GRATE MUST BE OF A TYPE THAT WILL NOT CREATE A HAZARD FOR BICYCLE TRAFFIC.
4. CATCH BASIN SHALL MEET HIGHWAY STANDARD-20 LOAD REQUIREMENTS.
5. MINIMUM STEEL REQUIRED AS PER ASTM C-478-69.
6. MINIMUM SUMP DEPTH SHALL BE 16".
7. ADJUSTING RING SHALL BE THE SAME SIZE AS THE CATCH BASIN.
8. NO BRICKS, WOOD OR OTHER MATERIALS PERMITTED FOR ADJUSTING GRADE, SOLID RISER OR FORMED TYPE II ONLY.

1 CATCH BASIN TYPE III

N.T.S.

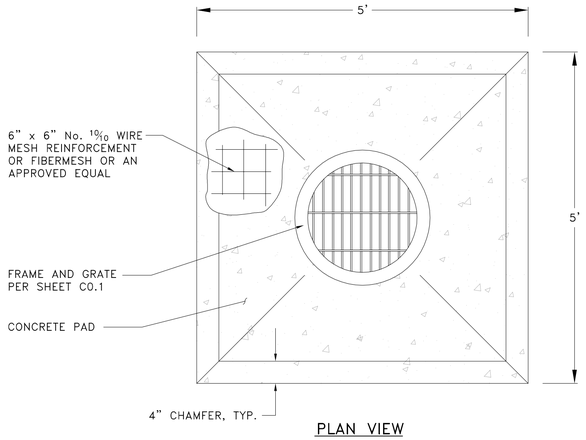

PLAN VIEW

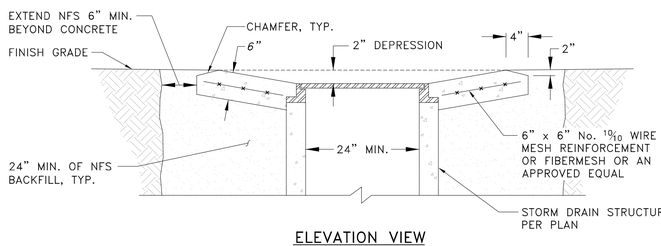

ELEVATION VIEW

NOTES:
1. FRAME AND GRATE SHALL BE DUCTILE IRON AND A TYPE THAT WILL NOT CREATE A HAZARD FOR BICYCLE TRAFFIC.
2. COMPACT BACKFILL TO 95% OF MAXIMUM DENSITY.

Note:
Vertical control joints 5' OC (see inset for detail)

2 CONCRETE AREA DRAIN DETAIL

N.T.S.

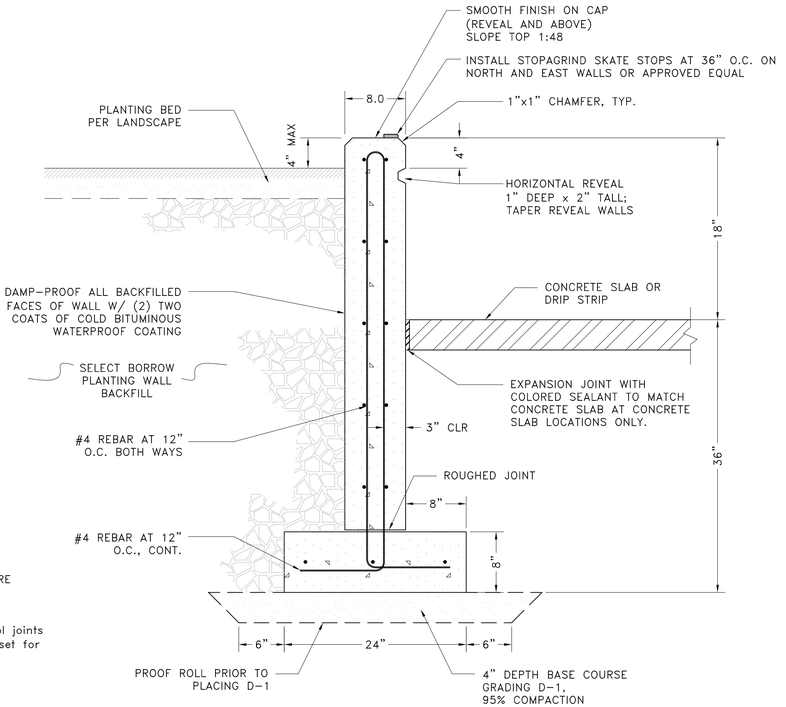

3 PLANTER WALL TYPICAL SECTION

N.T.S.

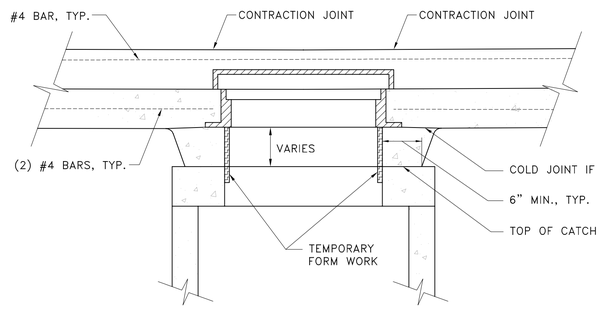

FRONT VIEW

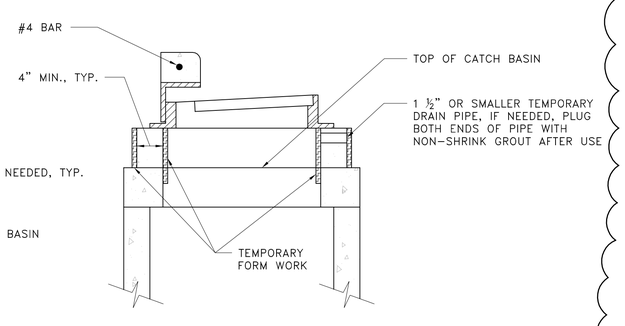

SIDE VIEW

NOTES:
1. ALL VOIDS BETWEEN THE TOP OF THE CATCH BASIN AND THE FRAME (EXCEPT A 1/4-INCH MAXIMUM THICKNESS GROUT BED MAY BE APPLIED IF TWO CONCRETE POURS ARE MADE) SHALL BE FILLED WITH CONCRETE MEETING THE REQUIREMENTS OF SECTION 03302-MINOR CONCRETE STRUCTURES. NO BRICKS, WOOD, STONES, ADJUSTING RINGS, OR OTHER GRADE ADJUSTMENT DEVICES SHALL BE USED.
2. TEMPORARY FORM WORK SHALL BE CONSTRUCTED TO PROVIDE A SMOOTH INSIDE EXPOSED SURFACE. AFTER REMOVAL OF FORM WORK, THE EXPOSED SURFACES SHALL BE FINISHED AS REQUIRED TO PROVIDE A SURFACE FREE OF VOIDS AND PROJECTIONS.
3. THIS DETAIL SHALL ALSO APPLY TO TYPE I MANHOLES. THE CONCRETE FRAME SUPPORT MAY BE CONSTRUCTED WITH A RECTANGULAR SHAPE TO MATCH THE FRAME (OVER A CIRCULAR MANHOLE OPENING), BUT MUST BE CONSTRUCTED WITH A CIRCULAR INSIDE SHAPE FOR INSTALLATION OF A CIRCULAR FRAME. GROUT SHALL BE USED (1/4-INCH MAX.) TO SLOPE LEVEL AREAS OF TOP SLAB FOR DRAINAGE.

4 CATCH BASIN FRAME SUPPORT DETAIL

N.T.S.

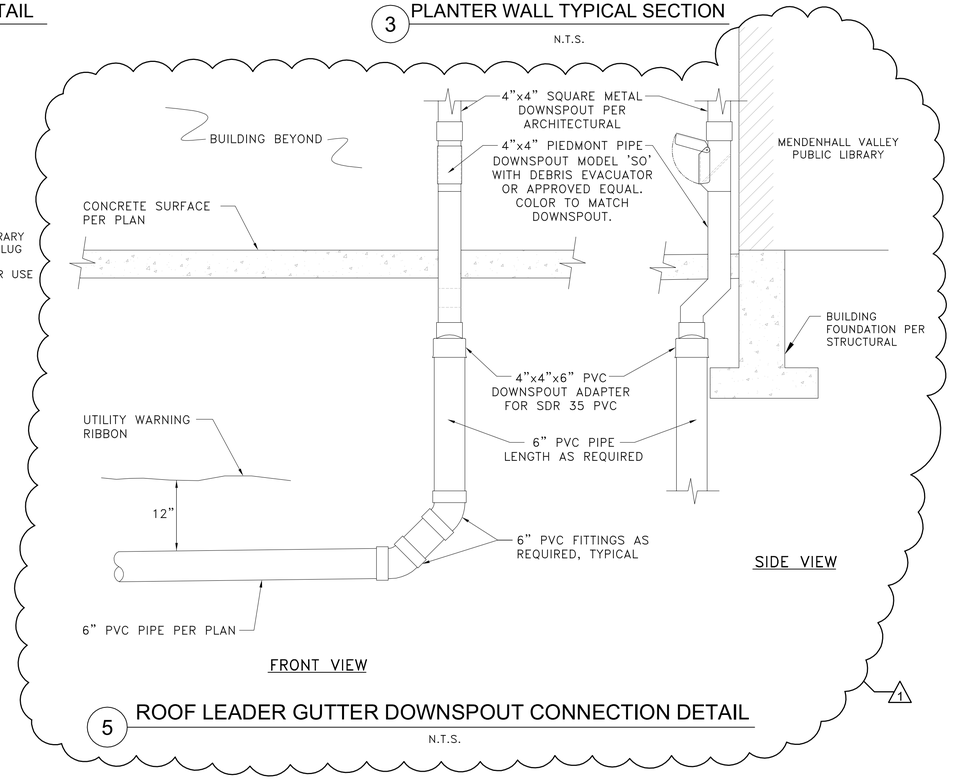

FRONT VIEW

SIDE VIEW

5 ROOF LEADER GUTTER DOWNSPOUT CONNECTION DETAIL

N.T.S.

STATE OF ALASKA 49TH
Joseph M. Pusich
CE 8152
REGISTERED PROFESSIONAL ENGINEER
3-19-14

NorthWind Architects LLC
126 Seward St
Juneau, AK 99801
Ph #907.586.6150
www.northwindarch.com

THA ARCHITECTURE

1" ACTUAL

IF THE ABOVE DIMENSION DOES NOT MEASURE ONE INCH (1") EXACTLY, THIS DRAWING WILL HAVE BEEN ENLARGED OR REDUCED, AFFECTING ALL LABELED SCALES.

MENDENHALL VALLEY PUBLIC LIBRARY

CBJ Contract # E14-051

Juneau, Alaska

SHEET TITLE:

CONSTRUCTION DETAILS

REVISION:
1 ADD. No. 2, 3/19/2014
2
3
4

SHEET # C4.2

DATE: 03/03/2014