ENGINEERING DEPARTMENT

ADDENDUM TO THE CONTRACT

for the

Eaglecrest Learning Center
Contract No. E14-076

ADDENDUM NO.: **ONE**

CURRENT DEADLINE FOR BIDS:
December 17, 2013

PREVIOUS ADDENDA: **NONE**

ISSUED BY: City and Borough of Juneau
ENGINEERING DEPARTMENT
155 South Seward Street
Juneau, Alaska 99801

PREVIOUS DEADLINE FOR BIDS:
December 13, 2013

DATE ADDENDUM ISSUED: **December 11, 2013**

The following items of the contract are modified as herein indicated. All other items remain the same. This addendum has been issued and is posted online. Please refer to the CBJ Engineering Contracts Division webpage at: http://www.juneau.org/engineering_ftp/contracts/Contracts.php

PROJECT MANUAL – VOLUME I:

Item No. 1: SECTION 00030 – NOTICE INVITING BIDS, DEADLINE FOR BIDS.

Change the bid date ***from*** December 13, 2013, ***to*** December 17, 2013. The time and place remain the same.

Item No. 2: SECTION 00100 – INSTRUCTION TO BIDDERS, Article 17.0 – AWARD OF CONTRACT, Paragraph C. ***Delete*** in its entirety and ***replace*** with the following:

"C. Low Bidder will be determined on the basis of the lowest total of the Base Bid plus combinations of Alternates if funding allows, as selected by the Selection Committee through the process described below.

1. Prior to the Deadline for Bids, a Selection Committee will be appointed by the Owner.
2. The Selection Committee will be sequestered in a conference room apart from the bid opening room at the time of bid opening.
3. The CBJ Purchasing staff will open bids. A bid summary sheet will be compiled without bidder identification, so that the Selection Committee will have no knowledge of which bids were made by which bidders.
4. The bid summary sheet will be delivered to the Selection Committee by the Engineering Contract Administrator.
5. The Selection Committee will choose the low bid comprised of the Base Bid and those Alternates deemed to be in the best interest of the project and within the approved construction budget. For award purposes, the CBJ will add any Alternate to the Total Base Bid Amount in Section 00310 – Bid Schedule.

6. The Selection Committee will identify in order from low to high the bids received for the project and the results will be posted."

Item No. 3: SECTION 055113 - METAL PAN STAIRS, PART 2 – PRODUCTS, Article 2.4 – STEEL-FRAMINED STAIRS, Paragraph D.

Replace "Metal Stairs shall" ***with*** "Contractor to engineer metal stair pans to".

Item No. 4: SECTION 055213 - PIPE AND TUBE RAILINGS, PART 1 – GENERAL, Article 1.1 – SUMMARY, Paragraph A, Subparagraph 1: ***Delete*** in its entirety and ***replace*** with:

"1. Interior & exterior steel pipe and tube railing."

Item No. 5: SECTION 075419 - PVC ROOFING, PART 1 – GENERAL, Article 1.8 – WARRANTY. ***Delete*** and ***replace*** with the following:

"A. Special Warranty: Manufacturer's standard or customized form, without monetary limitation, in which manufacturer agrees to repair or replace components of membrane roofing system that fail in materials or workmanship within specified warranty period.

B. Retain options in first subparagraph below based on those used on Project. Verify availability of manufacturer's total-system warranty and components included.

C. Special warranty includes membrane roofing, base flashings, roof insulation, fasteners, cover boards, substrate board, vapor barrier, insulation adhesive, roofing accessories, walk pads and other components of membrane roofing system.

D. Failure means leaks, damage to building not accessible to water intrusion, delamination of roofing assembly components, adhesive failure, seismic joint failure, or any other conditions that would render reassembly ineligible for membrane manufactures warranty.

1. Insulation Thermal Warranty: Provide a 20 year thermal warranty for the insulation. Warranty Period: 20 years from date of Substantial Completion of General Contract.
2. Only Special Warranty provided directly by Manufacture will be accepted. Special Warranty by third party will not be considered.
3. Warranty to include coverage for 3 second peak gust wind speeds of 110 mph."

Item No. 6: SECTION 075419 - PVC ROOFING, PART 2 – PRODUCTS, Article 2.2 – PERFORMANCE REQUIREMENTS, Paragraph B. ***Add*** subparagraph 4.

"4. Provide a system complying with the greater of items 1-3 above or wind loads of 110 mph (3 second gust) exposure D."

Item No. 7: SECTION 085413 - FIBERGLASS WINDOWS, PART 2 – PRODUCTS, Article 2.2 – WINDOW PERFORMANCE REQUIREMENTS, Paragraph A, Subparagraph 1. ***Change*** "CW 35" ***to*** "CW 30"

Item No. 8: SECTION 085413 - FIBERGLASS WINDOWS, PART 2 – PRODUCTS, Article 2.2 – WINDOW PERFORMANCE REQUIREMENTS, Paragraph B. ***Delete*** in its entirety and ***replace*** with the following:

"B. Thermal Transmittance: NFRC 100 maximum whole-window U-factor of

1. Fixed window 0.27 Btu/sq. ft. x h x deg F.
2. Awning window 0.27 Btu/sq. ft. x h x deg F.
3. Single Hung window 0.29 Btu/sq. ft. x h x deg F."

PROJECT MANUAL – VOLUME II

Item No. 9: SECTION 260519 - LOW-VOLTAGE ELECTRICAL POWER CONDUCTORS AND CABLES, PART 2 – PRODUCTS, Article 2.1 – CONDUCTORS AND CABLES. ***Add*** Paragraph C.

"C. Multiconductor Cable: Comply with NEMA WC 70/ICEA S-95-658 for metal-clad cable, Type MC."

Item No. 10: SECTION 260519 - LOW-VOLTAGE ELECTRICAL POWER CONDUCTORS AND CABLES, PART 3 – EXECUTION, Article 3.2 – CONDUCTOR INSULATION AND MULTICONDUCTOR CABLE APPLICATIONS AND WIRING METHODS. ***Add*** Paragraph D.

"D. Branch Circuits Concealed in Ceilings, Walls, and Partitions: Type THHN-2-THWN-2, single conductors in raceway or Metal-clad cable, Type MC."

Item No. 11: SECTION 271300 - COMMUNICATIONS BACKBONE CABLING, PART 1 – GENERAL, Article 1.7 – QUALITY ASSURANCE. ***Delete*** Paragraph A, and ***renumber*** Paragraphs B - D ***to*** A - C.

Item No. 12: SECTION 271300 - COMMUNICATIONS BACKBONE CABLING, PART 2 – PRODUCTS, Article 2.3 – UTP CABLE, Paragraph B. ***Revise*** as follows:

"Description: 25-pair, #24 AWG, outdoor cable."

Item No. 13: SECTION 271300 - COMMUNICATIONS BACKBONE CABLING, PART 2 – PRODUCTS, Article 2.3 – UTP CABLE, Paragraph B, Subparagraph 3. ***Revise*** as follows:

"Comply with TIA/EIA-568-B.2, Category 5e."

Item No. 14: SECTION 271300 - COMMUNICATIONS BACKBONE CABLING, PART 2 – PRODUCTS, Article 2.4 – UTP CABLE HARDWARE, Paragraph C. ***Revise*** follows:

"Connection Blocks: 110-style IDC for Category 5e. Provide blocks for the number..."

Item No. 15: SECTION 271300 - COMMUNICATIONS BACKBONE CABLING, PART 2 – PRODUCTS, Article 2.5 – OPTICAL FIBER CABLE, Paragraph B. ***Revise*** follows:

"Description: Multimode, 62.5/125-micrometer, 6-fiber, loose tube, outdoor cable"

Item No. 16: SECTION 271300 - COMMUNICATIONS BACKBONE CABLING, PART 2 – PRODUCTS, Article 2.5 – OPTICAL FIBER CABLE, Paragraph B, Subparagraph 3. ***Delete*** in its entirety.

Item No. 17: SECTION 312001 - EXCAVATION & EMBANKMENT, PART 1 – GENERAL, Article 1.02 – SUMMARY. ***Add*** **P**aragraph B.

"B. The CBJ owned upper quarry on Fish Creek Road is available for contractors use in obtaining rock. The contractor is responsible for procuring the rock and assuring rock from the quarry meets the specifications."

Item No. 18: SECTION 312001 - EXCAVATION & EMBANKMENT, PART 3 – EXECUTION, Article 3.01 – EXCAVATION, Paragraph D. ***Add*** the following sentences to the end of the paragraph.

"…..A site for waste material (owned by CBJ), is available within ½ mile of the construction site. When approved by the Owner and after receipt of required permits, material can be wasted there."

DRAWINGS:

Item No. 19: SHEET A003 – SYMBOLS, PARTITION & FINISH SCHEDULES, PARTITION SCHEDULE, General Notes, Note 2. ***Add*** "seal all penetrations" at the end of the note.

Item No. 20: SHEET A003 - SYMBOLS, PARTITION & FINISH SCHEDULES, FINISH SCHEDULE, 204 JAN. ***Change*** Floor Finish ***from*** "CV" ***to*** "SV".

Item No. 21: SHEET A004 – OPENING TYPES & SCHEDULE, OPENING SCHEDULE, 106B, 106C, and 106D. ***Change*** Door type ***from*** "M" ***to*** "H".

Item No. 22: SHEET A201 ELEVATOR 215. ***Add*** the following note: An Otis Hydrofit holeless hydraulic elevator (not requiring a machine room) or approved equal is an acceptable substitution for the electric traction elevator. The control equipment must be able to be accommodated within the "closet" in room 110. The cab size must be equal to or greater than the elevator specified.

Item No. 23: SHEET A301 – EXTERIOR ELEVATIONS, DETAIL 2. ***Add*** window label "C" to second floor window adjacent grid A.

Item No. 24: SHEET A801 – DETAILS, DETAIL 1 – EAVE DETAIL and DETAIL 2 – RAKE DETAIL. ***Change*** the continuous 4x6x3/16 angle, at the eave and rake, to a bent plate of the same size. Bent plate to match angle of roof.

Item No. 25: SHEET A801 - DETAILS, DETAILS 1-3**.**

Add the following General Notes: Provide 6 mil vapor barrier over roof deck, typical.

Add the following general note: Install roof screws with penetration required by roof assembly for loads applied, without penetrating the roof decking.

Item No. 26: SHEETS S301- FOUNDATION DETAILS and S302 – FOUNDATION DETAILS. ***Delete*** and ***replace*** with the attached Sheets S301, and S302, labeled Rev 1, dated 12/10/2013.

Item No. 27: Sheet S402 – STRUCTURAL STEEL DETAILS, Detail 9 – CANOPY SECTION DETAIL. ***Change*** "HSS 4x4x1/4" ***to*** "HSS4x2x3/16" at 24" on center.

Item No. 28: SHEET S403 – STRUCTURAL STEEL DETAILS, Detail 1 – OPEN WEB JOIST CONNECTION, Detail 7 – EAVE DETAIL, and Detail 8 – EAVE CORNER DETAIL. ***Change*** 3x3x3/16 rake and eave angle ***to*** 4x6x3/16 bent plate. ***Add*** the following note "See details 1&2 A801".

Item No. 29: SHEET E202 – SECOND FLOOR POWER AND SIGNAL PLAN. ***Add*** Sheet Note 2.

"2. SNOW MAKING RECEPTACLES: HUBBELL INSULGRIP PIN AND SLEEVE, STYLE II, WITH ANGLED BACKBOX, OR EQUAL."

Item No. 30: SHEET E301 – FIRST FLOOR LIGHTING PLAN.

Add a dimmer switch in Mechanical/Electrical 110 for the canopy mounted Type J luminaires.

Provide additional wiring in run as required for dimming control.

Add a separate switch leg through the lighting contactor for non-dimmed luminaire Types K and F.

Delete the Type D luminaires in Tickets 107.

Add (2) Type B4 luminaires mounted on the north and south walls in Tickets 107. Note luminaires in Tickets 107 shall be mounted at 9'6" to bottom.

Revise Type B16 luminaire in Tickets 107 to Type B20.

Item No. 31: SHEET E401 – ENLARGED PLANS, Detail 2 – COMMUNICATIONS 210. ***Revise*** leader on backbone cable run between Communications 210 and the existing lodge ***to*** "4"C, with 6-strand optical fiber in innerduct and (2) 25-pair copper, 4"C spare."

Item No. 32: SHEET E501 – SINGLE LINE DIAGRAMS. ***Add*** Sheet Notes 1 and 2.

"1. RECEPTACLE FOR PORTABLE GENERATOR: HUBBELL INSULGIRP PIN AND SLEEVE, STYLE II, WITH ANGLED BACKBOX, OR EQUAL.
2. MOUNT GROUND BAR IN AN ENCLOSURE ON THE EXTERIOR WALL NEAR THE MAIN CIRCUIT BREAKER. ROUTE GROUNDING CONDUCTORS IN PVC CONDUIT TO BELOW GRADE."

Item No. 33: SHEET E501 – SINGLE LINE DIAGRAMS.

Add elevator controller circuit breaker size, 40/3.

Delete shunt trip operator for elevator controller circuit breaker.

Add elevator controller feeder, ¾"C, 3#8, 1#10G.

Item No. 34: SHEET E602 – SCHEDULES, LUMINAIRE SCHEDULE.

Change Type D luminaire to a 4" Downlight, Omega OM4 LED 20 120 R4LED 35K WH.

Add Type B20 luminaire, Ledalite 1228 T10 Q S 20 1 1 E.

Add Type J frame-in kit to catalog number, C6X6L15 N 1. ***Add*** note to provide 0-10 volt dimming for Type J luminaire.

By: _____

Rich Ritter, AIA
Acting Contracts Officer

Total number of pages contained within this Addendum: 8

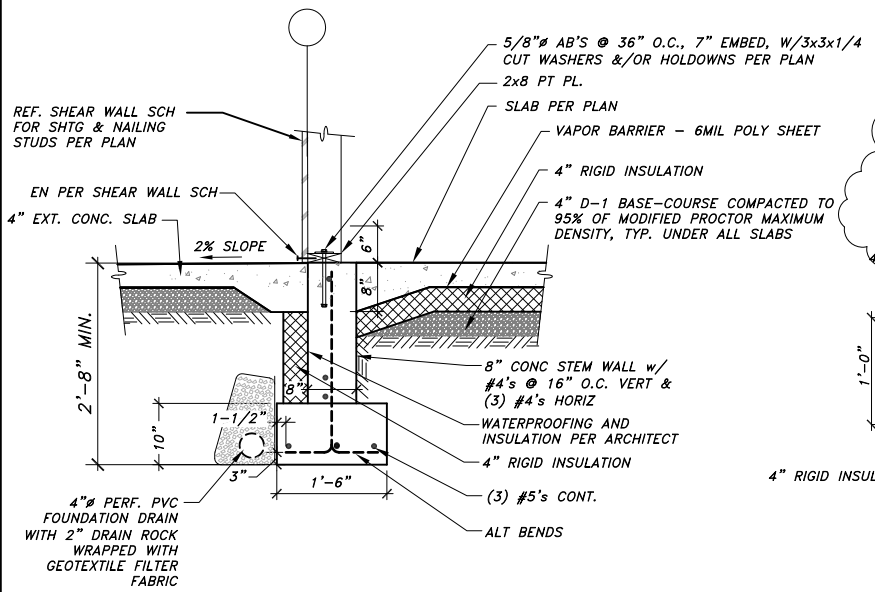

1 TYPICAL EXTERIOR FOOTING
N.T.S.

NOTE: ANCHOR BOLTS AS SHOWN HERE TO BE USED AT ALL EXTERIOR WALLS, UNLESS NOTED OTHERWISE.

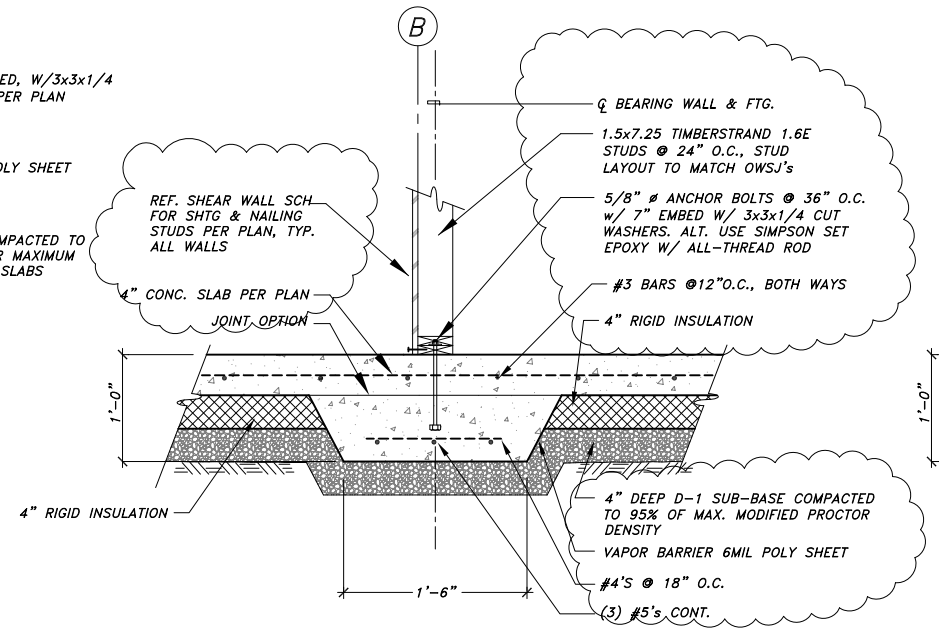

2 THICKENED SLAB DETAIL
N.T.S.

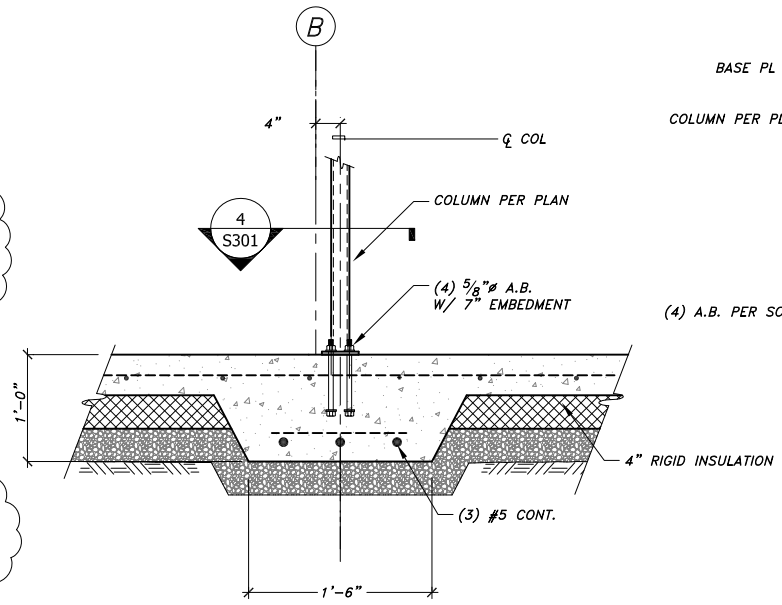

3 HSS COLUMN IN WALL
N.T.S.

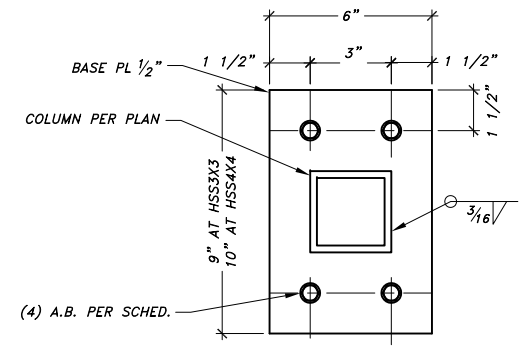

4 COLUMN BASE DETAIL
N.T.S.

COLUMN BASE SCHEDULE

COL.	BASE PLATE WIDTH "W"	BASE PLATE THICKNESS "T"	ANCHOR BOLTS GRADE A307 DIAMETER	ANCHOR BOLTS GRADE A307 EMBEDMENT
HSS3x3x1/4	DET.4	1/2"	5/8"	7"
HSS4x4x1/4	DET.4	1/2"	3/4"	9"
HSS6x6x1/4	12"	3/4"	3/4"	9"
HSS7x7x1/4	13"	1"	3/4"	9"
HSS8x8x5/16	14"	1"	3/4"	9"

NOTE: ALL ANCHOR BOLTS ARE TO BE HEX HEADED

SLAB NOTES

1. ALL INTERIOR SLABS HAVE RADIANT IN-FLOOR HEAT, WITH 4" RIGID INSULATION BENEATH.
2. NO RADIANT HEAT OR INSULATION AT EXTERIOR SLABS.
3. REINFORCE INTERIOR SLABS WITH #3 BARS @ 12" O.C., BOTH WAYS, AT MIDDLE OF SLAB.
4. EXTERIOR SLAB REINFORCEMENT PER CIVIL

VIEW A-A
N.T.S.

5 TYPICAL INTERIOR FOOTING
3/8" = 1'-0"

6 TYPICAL PILASTER AT EXT. WALL DETAIL
3/8" = 1'-0"

FOOTING DETAIL 1/S302

7 COLUMN AT GRID C-3.3

Jensen Yorba Lott Inc.
522 West 10th Street
Juneau, Alaska 99801
phone 907-586-1070
fax 907-586-3959
jensenyorbalott.com

R & M ENGINEERING, INC.
6205 GLACIER HIGHWAY
JUNEAU, AK. 99801
Phone 907-780-6060
Fax 907-780-4611
rmengineering@rmjuneau.com

STATE OF ALASKA 49TH ADRIAN D. SLATER CE 7351 REGISTERED PROFESSIONAL ENGINEER
10-28-2013

CITY & BOROUGH OF JUNEAU
EAGLECREST LEARNING CENTER
CBJ CONTRACT No. E014-076

REVISIONS
1 12/10/2013

SHEET TITLE
FOUNDATION DETAILS

DATE: OCTOBER 28, 2013
FILE: 13031

S301

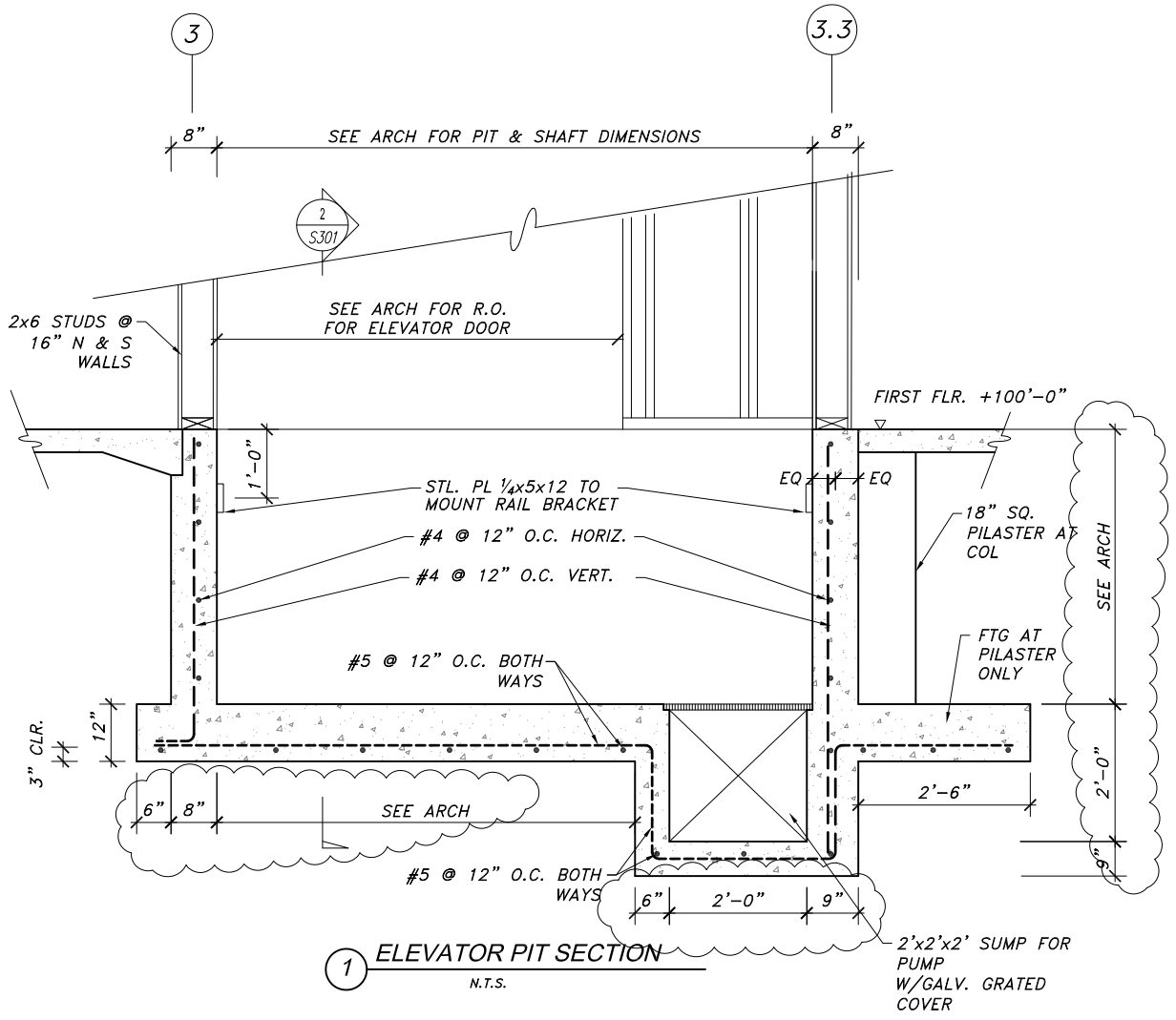

1 ELEVATOR PIT SECTION

N.T.S.

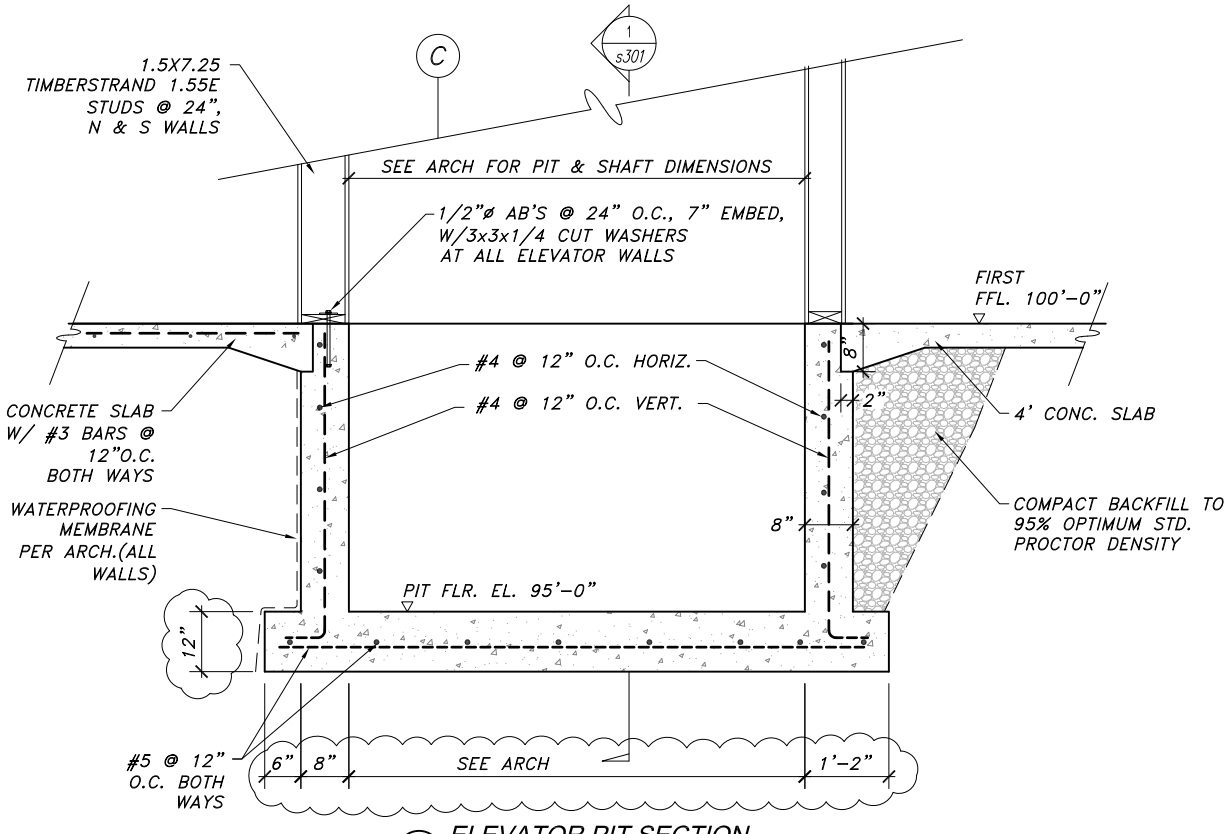

2 ELEVATOR PIT SECTION

N.T.S.

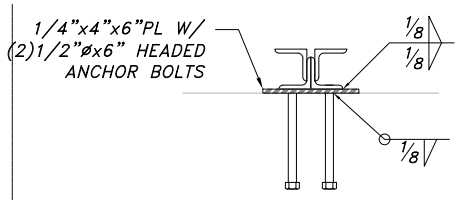

4 K-JOIST SEAT DETAIL

N.T.S.

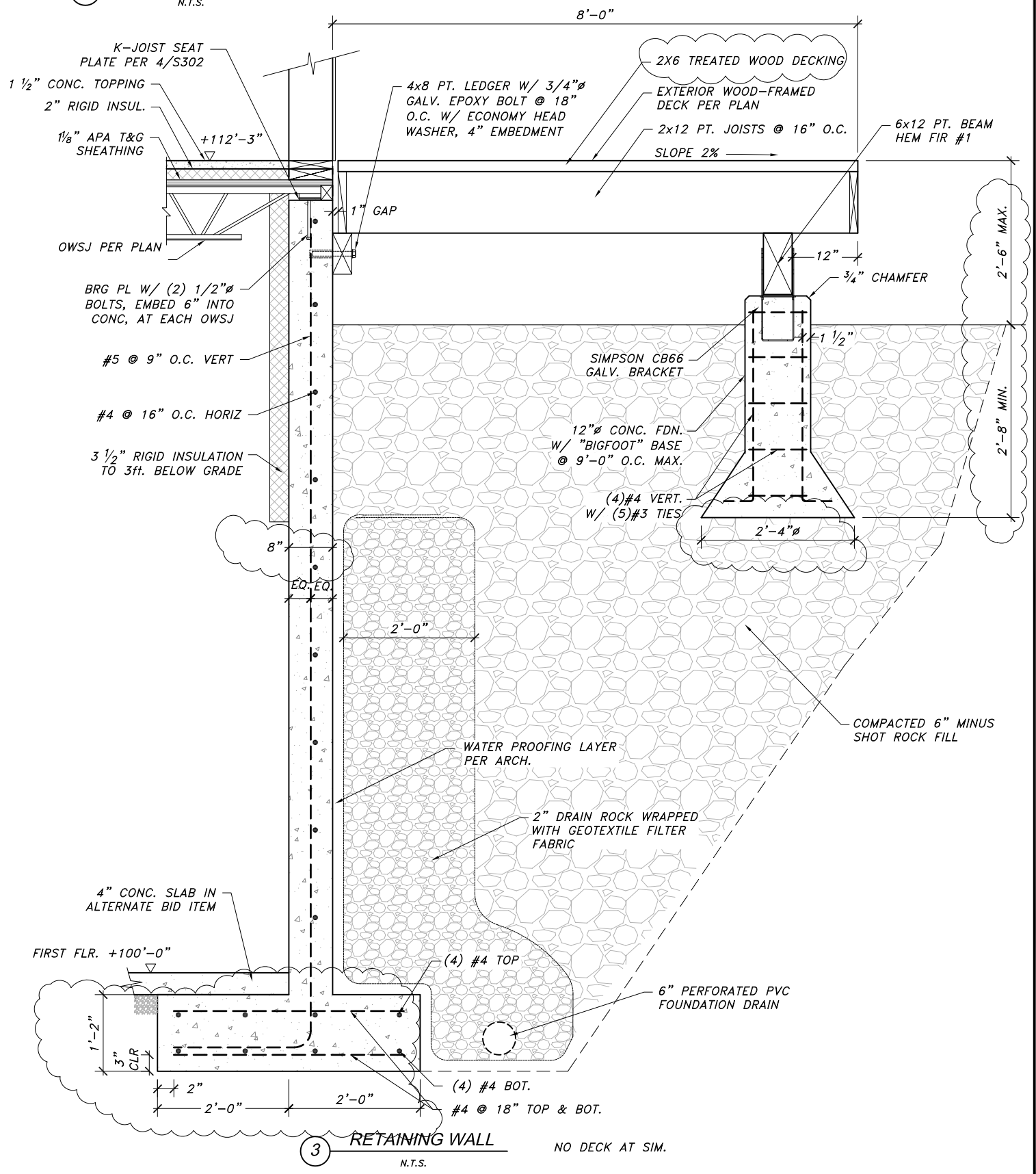

3 RETAINING WALL

N.T.S.

NO DECK AT SIM.

Jensen Yorba Lott Inc.
522 West 10th Street
Juneau, Alaska 99801
phone 907-586-1070
fax 907-586-3959
jensenyorbalott.com

R & M ENGINEERING, INC.
6205 GLACIER HIGHWAY
JUNEAU, AK. 99801
Phone 907-780-6060
Fax 907-780-4611
rmengineering@rmjuneau.com

STATE OF ALASKA 49TH — ADRIAN D. SLATER CE 7351 REGISTERED PROFESSIONAL ENGINEER — 10-28-2013

CITY & BOROUGH OF JUNEAU
EAGLECREST LEARNING CENTER
CBJ CONTRACT No. E014-076

REVISIONS
1 12/10/2013

SHEET TITLE
FOUNDATION DETAILS

DATE: OCTOBER 28, 2013
FILE: 13031

S302