SYMBOLS

AAV	AUTOMATIC AIR VENT
AFF	ABOVE FINISHED FLOOR
AV	AUTOMATIC VALVE
B	BUTTERFLY DAMPER
BAS	BUILDING AUTOMATION SYSTEM
BFP	BACK FLOW PREVENTER
BOD	BOTTOM OF DUCT
C	COMMON
CFM	CUBIC FEET PER MINUTE
CO	CLEANOUT
DDC	DIRECT DIGITAL CONTROL
DF	DRINKING FOUNTAIN
DG	DOOR GRILLE
DI	DUCTILE IRON
DN	DOWN
DSPR	DRY SPRINKLER
DU	DIELECTRIC UNION
DV	DRAIN VALVE
DWH	WATER HEATER
EA	EXHAUST AIR
EAD	EXHAUST AIR DAMPER
EAT	ENTERING AIR TEMPERATURE
EF	EXHAUST FAN
EG	EXHAUST GRILLE
ESP	EXTERNAL STATIC PRESSURE
ET	EXPANSION TANK
EWT	ENTERING WATER TEMPERATURE
F&B	FACE & BYPASS DAMPERS
FCO	FLOOR CLEANOUT
FD	FLOOR DRAIN
FS	FLOOR SINK
GPM	GALLONS PER MINUTE
HB	HOSE BIBB
HC	HEATING COIL
HWRP	HOT WATER RECIRCULATING PUMP
IAW	IN ARCHITECTURAL WORK
ID	INSIDE DIAMETER
IEW	IN ELECTRICAL WORK
ICW	IN CIVIL WORK
INV. EL.	INVERT ELEVATION
IPS	IRON PIPE SIZE
L	LAVATORY
LAT	LEAVING AIR TEMPERATURE
LL	LOW LIMIT
LV	LOUVER
LWT	LEAVING WATER TEMPERATURE
MAV	MANUAL AIR VENT
MB	MANUAL MULTIBLADE DAMPER
MBH	1,000 BTU PER HOUR
NC	NORMALLY CLOSED
NIC	NOT IN CONTRACT
NIM	NOT IN MECHANICAL
NF	NON FREEZE
NO	NORMALLY OPEN
OAD	OUTSIDE AIR DAMPER
OC	ON CENTER
OD	OUTSIDE DIAMETER
OSA	OUTSIDE AIR
P	PUMP
PC	PUMPER CONNECTION
PRV	PRESSURE REDUCING VALVE
PSI	POUNDS PER SQUARE INCH
RA	RETURN AIR
RAD	RECIRCULATING AIR DAMPER
RD	ROOF DRAIN
RG	RETURN GRILLE
RL	RAIN LEADER
RPBP	REDUCED PRESSURE BACKFLOW PREVENTER
S	SINK
SA	SUPPLY AIR
SAT	SUPPLY AIR THERMOSTAT
SF	SUPPLY FAN
SG	SUPPLY GRILLE
SP	SUMP PUMP
SPR	SPRINKLER
SS	SERVICE SINK
T&P	TEMPERATURE AND PRESSURE RELIEF VALVE
TP	TRAP PRIMER
TSP	TOTAL STATIC PRESSURE
TV	TEMPERING VALVE
TYP	TYPICAL
U	URINAL
VI	VIBRATION ISOLATOR
VTR	VENT THROUGH ROOF
WC	WATER CLOSET
WCO	WALL CLEAN OUT
WH	WALL HYDRANT
WHA	WATER HAMMER ARRESTOR
WSPR	WET SPRINKLER
YCO	YARD CLEANOUT

RL	ROOF DRAIN PIPING
HS	HEATING SUPPLY
HR	HEATING RETURN
CW	COLD WATER
HW	HOT WATER
HWR	HOT WATER RECIRCULATING
V	VENT
W	WASTE
WSPR	WET SPRINKLER
DSPR	DRY SPRINKLER
A	ACCESS DOOR
AV	AUTOMATIC VALVE
CO	CLEANOUT
DV	DRAIN VALVE
	UNION
	PITCHED DOWN
	REDUCER
	CAPPED OR PLUGGED
	GATE VALVE OR BALL VALVE
	STRAINER
5	FLOW SETTER W/NO.
	TEST PORT/PLUG
FCO	FLOOR CLEANOUT
	CHECK VALVE
	GLOBE VALVE OR
	DIRECTION OF FLOW
	ISOLATING BALL VALVE
	PUMP
2	CONSTRUCTION NOTE
	SAFETY OR RELIEF VALVE
T V	THERMOSTAT OR THERMOSTATIC SENSOR – IMMERSION, ROOM
	THERMOMETER
	PRESSURE GAGE
$	CONTROL SWITCH
ø	DIAMETER
℄	CENTER LINE
OR B	MANUAL BUTTERFLY DAMPER
100 9x9 8"ø SG–1 3–WAY BLOW	AIR VOLUME DIFFUSER/GRILLE SIZE DIFFUSER INLET SIZE GRILLE TYPE BLOW PATTERN
	CEILING RETURN/EXHAUST GRILLE
	CEILING SUPPLY DIFFUSER
	SQUARE TO ROUND DUCT TRANSITION
	RETURN/EXHAUST DUCT UP, DOWN
	SUPPLY DUCT UP, DOWN
	WALL GRILLE

FAN SCHEDULE

EQUIPMENT	AREA SERVED	CFM	TSP, INCHES OF WATER	ESP, INCHES OF WATER	DESIGN MANUFACTURE & MODEL	MIN. HP	VOLTS / PHASE	FEATURES AND ACCESSORIES
HRV–1 SF	1ST FLOOR VENTILATION	1350	2.85	0.875	XeteX IAQ–2500–BP–HW	2	208V/3 PHASE	HEAT RECOVERY UNIT. FILTERS FOR RA AND OSA. HX F&B DAMPER FOR DEFROST CONTROL. 58 MBH HX RECOVERY. OUTDOOR AND EXHAUST AIR DAMPERS.
HRV–1 EF		1180	2.25	0.875		1–1/2	208V/3 PHASE	
HRV–2 SF	2ND FLOOR VENTILATION	1600	2.70	0.875	XeteX IAQ–2500–BP–HW	2	208V/3 PHASE	HEAT RECOVERY UNIT. FILTERS FOR RA AND OSA. HX F&B DAMPER FOR DEFROST CONTROL. 69 MBH HX RECOVERY. OUTDOOR AND EXHAUST AIR DAMPERS.
HRV–2 EF		1550	2.35	0.875		1–1/2	208V/3 PHASE	

HEATING COIL SCHEDULE

EQUIPMENT	AREA SERVED	LOCATION	AIR VOLUME (CFM)	SIZE (HxW)	VELOCITY (FPM)	MAX AIR PRESSURE DROP IN W.C.	ROWS	MAXIMUM FPI (FPI)	COIL CAPACITY (MBH)	WATER TEMPERATURES °F ENTERING	WATER TEMPERATURES °F LEAVING	AIR TEMPERATURES °F db ENTERING	AIR TEMPERATURES °F db LEAVING	FLOW RATE (GPM)
HC–1	HRV–1	MECHANICAL/ELEC	1350	21x18	540	0.25	2	12	54.0	115	95	28	65	6
HC–2	HRV–2	ABOVE LOBBY	1600	21x18	610	0.27	2	12	60.5	115	95	30	65	6

EQUIPMENT SCHEDULE

EQUIPMENT	FUNCTION	LOCATION	SIZE/CAPACITY	DESIGN MANUFACTURE AND MODEL	FEATURES AND ACCESSORIES
BOILER, B–1 ELECTRIC	BLDG HEATING	MECHANICAL	256 MBH NET IBR, 75 kW	PRECISION PCW1–075	ELECTRIC BOILER, WATER. 75kW, 480 VOLT, 3 PHASE. 5 STEPS AT 15 kW EACH. INTEGRAL PID SEQUENCING STAGE CONTROLS. SINGLE POINT POWER CONNECTION.
DWH–1 ELECTRIC	DOMESTIC WATER HEATING	MECHANICAL	50 GALLON	AO SMITH GOLD DVE–52–9	50 GALLON ELECTRIC WATER HEATER. 3 ELEMENTS. 9 kW. 37 GPH RECOVERY AT 100°F TEMPERATURE RISE. ASME. 208 VOLT, THREE PHASE. INTEGRAL PROGRAMMABLE SEQUENCER.
EXPANSION TANK (ET–1) HEATING	HYDRONIC HEATING THERMAL EXPANSION	MECHANICAL	25 GALLON TANK 10 GALLON ACCEPTANCE	AMTROL 100–LBC	ASME. BLADDER TYPE.
EXPANSION TANK (ET–2) DOMESTIC	DOMESTIC HOT WATER THERMAL EXPANSION	MECHANICAL	6 GALLON TANK 3 GALLON ACCEPTANCE	AMTROL ST–12V–C	ASME. SUITABLE FOR POTABLE WATER.
AIR SEPARATOR, AS–1	AIR REMOVAL HEATING SYSTEM	MECHANICAL	2–INCH	SPIROTHERM SENIOR	–

PUMP SCHEDULE

PUMP NUMBER	FUNCTION	GALLONS PER MINUTE (GPM)	HEAD DEVELOPED (FT. OF WATER)	DESIGN MANUFACTURER AND MODEL	MINIMUM HORSEPOWER ELECTRICAL CHARACTERISTICS	FEATURES
P–1A P–1B	BUILDING HEATING PUMP	25	28	B&G	3/4 HP, 208V THREE PHASE	IN LINE MOUNTED CENTRIFUGAL PUMP. CUSTOM IMPELLER. 54% MINIMUM EFFICIENCY. 1,750 RPM.
P–2A P–2B	RADIANT PUMP	14	24	B&G	1/2 HP, 208V THREE PHASE	IN LINE MOUNTED CENTRIFUGAL PUMP. CUSTOM IMPELLER. 42% MINIMUM EFFICIENCY. 1,750 RPM.
HWRP	DOMESTIC HW RECIRCULATING	2	6	B&G	1/8 HP, 120V SINGLE PHASE	CARTRIDGE PUMP, PIPE MOUNTED
SP–1	ELEVATOR SUMP PUMP	50	20	HYDROMATIC	3/4 HP, 120V SINGLE PHASE	SUBMERSIBLE SUMP PUMP. DUPLEX RECEPTACLE.

PLUMBING CONNECTION SCHEDULE

FIXTURE	HOT WATER	COLD WATER	WASTE	VENT
WATER CLOSET, WC	–	1–1/4	4	2
LAVATORY, L	1/2	1/2	1–1/2	1–1/4
SERVICE SINK, SS	1/2	1/2	3	2
FLOOR DRAIN, FD	–	–	2	1–1/2, 2
PRIMING LINE	–	1/2	–	–
DRINKING FOUNTAIN, DF	–	1/2	1–1/2	1–1/4
SINK, S	1/2	1/2	2	1–1/2
URINAL, U	–	1"	2	2

MECHANICAL SHEET LIST

Sheet Number	Sheet Title
M001	SYMBOLS & SCHEDULES
M002	SCHEDULES
M100	FOUNDATION PLAN
M101	FIRST FLOOR PLAN – PIPING
M102	SECOND FLOOR PLAN – PIPING
M201	FIRST FLOOR PLAN – DUCTWORK
M202	SECOND FLOOR PLAN – DUCTWORK
M301	FIRST FLOOR RADIANT PLAN
M302	SECOND FLOOR RADIANT PLAN
M401	MECH ROOM ENLARGED PLANS
M402	MECHANICAL ROOM SECTION
M403	SECTION – GRID 2.5
M404	SECTION – GRID A.6
M405	SECTION – GRID 2.6
M406	SECTION – GRID C.8
M501	PLUMBING DIAGRAMS
M502	HEATING SYSTEM DIAGRAMS
M503	PLUMBING DIAGRAMS & DETAILS
M601	CONTROLS
M701	PIPING DETAILS
M702	DUCTWORK DETAILS

Jensen Yorba Lott Inc.
522 West 10th Street
Juneau, Alaska 99801
phone 907-586-1070
fax 907-586-3959
jensenyorbalott.com

MURRAY & ASSOCIATES P.C.
CONSULTING MECHANICAL ENGINEERS
P O BOX 21081
JUNEAU, AK 99802
MURRAYPC.COM
TEL: 907 780-6151 FAX: 907 780-6182

STATE OF ALASKA
49th
DOUGLAS H. MURRAY
ME 7870
REGISTERED PROFESSIONAL ENGINEER
ISSUE DATE: 10–28–2013

CITY & BOROUGH OF JUNEAU
EAGLECREST LEARNING CENTER
CBJ CONTRACT No. E014-076

REVISIONS

SHEET TITLE
SYMBOLS & SCHEDULE

DATE: **October 28, 2013**
FILE: **13031**

M001

FLOWSETTER AND AUTOMATIC VALVE SCHEDULE

NUMBER	UNIT SERVED	AREA SERVED	LOCATION	DESIGN GPM	FLOWSETTER SIZE (INCHES)	AUTOMATIC VALVE PRESSURE DROP (PSI)	AUTOMATIC VALVE TYPE	AUTOMATIC VALVE OPERATION	CONTROL TYPE	NORMAL POSITION
1	RADIANT MANIFOLD 1	100–102 LOWER LOBBY	MANIFOLD 1	3.0	3/4	1–2	2–WAY	ON–OFF	DDC	NO
2	RADIANT MANIFOLD 2	107 TICKETS	MANIFOLD 2	0.5	1/2	1–2	2–WAY	ON–OFF	DDC	NO
3	RADIANT MANIFOLD 3	104–106 113 ALTERNATE	MANIFOLD 3	0.7	–	1–2	2–WAY	ON–OFF	DDC	NO
3A	RADIANT MANIFOLD 3A	104,105	MANIFOLD 3A	0.4	1/2	–	–	–	–	–
3B	RADIANT MANIFOLD 3B	106,113	MANIFOLD 3B	0.3	1/2	–	–	–	–	–
4	RADIANT MANIFOLD 4	109 REPAIR	MANIFOLD 4	1.2	1/2	1–2	2–WAY	ON–OFF	DDC	NO
5	RADIANT MANIFOLD 5	200, 202–205 UPPER LOBBY	MANIFOLD 5	1.9	3/4	1–2	2–WAY	ON–OFF	DDC	NO
6	RADIANT MANIFOLD 6	201 RENTAL	MANIFOLD 6	2.1	3/4	1–2	2–WAY	ON–OFF	DDC	NO
7	RADIANT MANIFOLD 7	206–209 OFFICES	MANIFOLD 7	1.2	1/2	1–2	2–WAY	ON–OFF	DDC	NO
8	RADIANT MANIFOLD 8	211–213 CLASSROOMS	MANIFOLD 8	1.8	3/4	1–2	2–WAY	ON–OFF	DDC	NO
9	MIXING VALVE	RADIANT	110 MECH/ELEC	14.0	1–1/4	2.5	4–WAY	MODULATING	DDC	NO
10	HRV–2 HC–2	UPPER FLOOR	200 UPPER LOBBY	6.0	1"	2.5	3–WAY	MODULATING	DDC	NO
11	HRV–1 HC–1	LOWER FLOOR	110 MECH/ELEC	5.0	1"	2.5	3–WAY	MODULATING	DDC	NO
12	RADIANT	MANIFOLDS	110 MECH/ELEC	13.1	1–1/4	–	–	–	–	–
HWR1	DOMESTIC HW RECIRC.	110 MECH/ELEC	110 MECH/ELEC	2.0	3/4	–	–	–	–	–

DIFFUSER/GRILLE EQUIPMENT SCHEDULE

MARK	EQUIPMENT	MANUFACTURER & MODEL	FEATURES/CONTROLS/OPTIONS
EG–1	CEILING RETURN/EXHAUST GRILLE (SURFACE MOUNT)	TITUS 350FL	ALUMINUM. SURFACE MOUNT. RECTANGULAR, WITH BLADES PARALLEL TO LONG DIMENSION. 3/4–INCH BLADE SPACING. 35° DEFLECTION.
SG–1	CEILING SUPPLY DIFFUSER (SURFACE MOUNT)	TITUS 300 FL	ALUMINUM. SURFACE MOUNT. RECTANGULAR, WITH FRONT BLADES PARALLEL TO LONG DIMENSION. 3/4–INCH BLADE SPACING. INDIVIDUALLY ADJUSTABLE FRONT AND REAR BLADES.
SG–2	CEILING SUPPLY DIFFUSER (LAY–IN)	TITUS TDCA–AA	ALUMINUM, ADJUSTABLE DISCHARGE LOUVER. SEE PLANS FOR INLET AND LOUVER SIZES. COORDINATE THROW PATTERN WITH PLANS. LAY–IN TYPE BORDER.

LOUVER SCHEDULE

MARK	SIZE	MANUFACTURER & MODEL	FEATURES
LV–1 – HRV–1	42x24	RUSKIN ELF 6375 DXH	ALUMINUM ALLOY FRAME AND BLADES, MINIMUM WATER PENETRATION DESIGN WITH DRAINABLE BLADES. NOMINAL 55% FREE AREA. 6 INCHES DEEP WITH CHANNEL FRAME, 70% KYNAR FINISH, 20 YEAR WARRANTY.
LV–2 – HRV–2	42x24	RUSKIN ELF 6375 DXH	ALUMINUM ALLOY FRAME AND BLADES, MINIMUM WATER PENETRATION DESIGN WITH DRAINABLE BLADES. NOMINAL 55% FREE AREA. 6 INCHES DEEP WITH CHANNEL FRAME, 70% KYNAR FINISH, 20 YEAR WARRANTY.

CODE NOTES:

1. CODES & REGULATIONS: ALL WORK SHALL BE STRICTLY IN CONFORMANCE WITH APPLICABLE CODES AND REGULATIONS. ALL WORK SHALL BE IN ACCORDANCE WITH SPECIFICATIONS, DRAWINGS, THE 2009 INTERNATIONAL CODES, 2009 UNIFORM PLUMBING CODE, NFPA, CBJ TITLE 19, AND STATE OF ALASKA MODIFICATIONS. ALL ELECTRICAL EQUIPMENT SHALL BEAR THE UL LABEL. ALL SHEET METAL WORK TO BE DONE IN ACCORDANCE WITH SMACNA REQUIREMENTS. PROVIDE ALL TESTING REQUIREMENTS FOR MECHANICAL SYSTEMS AS REQUIRED AND WITNESSED BY ADMINISTRATIVE AUTHORITY.
2. INSTALLATION OF PLUMBING SYSTEMS SHALL BE IN ACCORDANCE WITH CROSS CONNECTION REQUIREMENTS OF CHAPTER 6 OF UNIFORM PLUMBING CODE AND CBJ REQUIREMENTS. ALL HOSE BIBBS IN DOMESTIC WATER SYSTEM SHALL HAVE VACUUM BREAKERS AND CAPS.
3. VENTILATION: MECHANICAL VENTILATION IS TO BE PROVIDED AS SHOWN AND AS REQUIRED BY IMC. TEST AND BALANCE SYSTEM, PROVIDE STANDARD ADJUSTMENT LOG.
4. FIRE SUPPRESSION: THE SPRINKLER SYSTEM FOR ENTIRE FACILITY IS TO MEET NFPA 13 AND STATE OF ALASKA REQUIREMENTS. PROVIDE COMPLETE SUBMITTAL DATA, O&M, AND AS–BUILTS OF SPRINKLER SYSTEM. TEST AND CERTIFY SYSTEM AS REQUIRED. SEE SPECIFICATIONS.

Jensen Yorba Lott Inc.
522 West 10th Street
Juneau, Alaska 99801
phone 907-586-1070
fax 907-586-3959
jensenyorbalott.com

MURRAY & ASSOCIATES P.C.
CONSULTING MECHANICAL ENGINEERS
P O BOX 21081
JUNEAU, AK 99802
MURRAYPC.COM
TEL: 907 780-6151 FAX: 907 780-6182

STATE OF ALASKA
DOUGLAS H. MURRAY
ME 7870
REGISTERED PROFESSIONAL ENGINEER
ISSUE DATE: 10–28–2013

CITY & BOROUGH OF JUNEAU
EAGLECREST LEARNING CENTER
CBJ CONTRACT No. E014-076

REVISIONS

SHEET TITLE
SCHEDULES

DATE: **October 28, 2013**
FILE: **13031**

M002

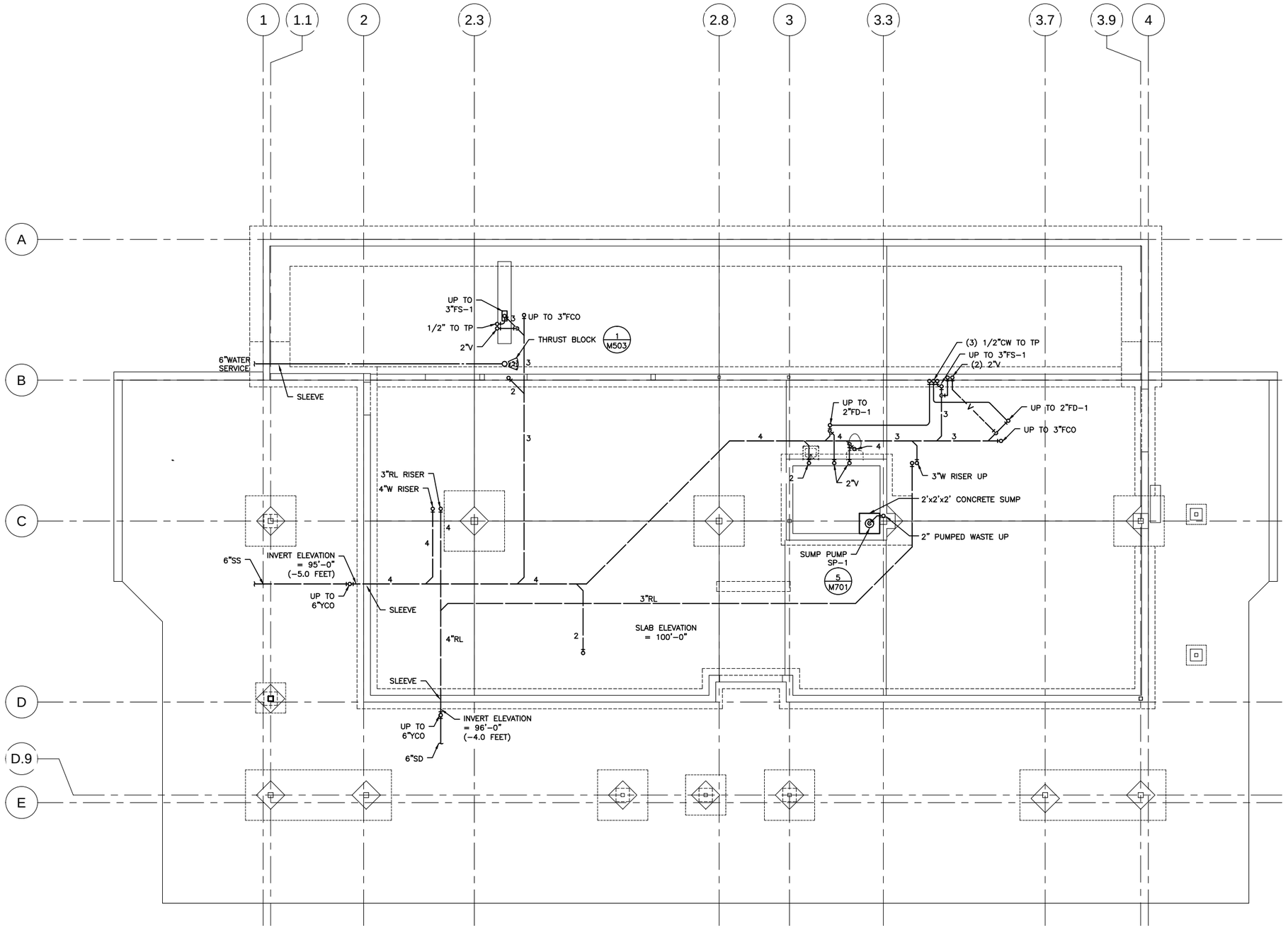

1 **FOUNDATION PLAN**

SCALE: 0 2' 4' 8' 16'

PROJECT NORTH

Jensen Yorba Lott Inc.

522 West 10th Street
Juneau, Alaska 99801
phone 907-586-1070
fax 907-586-3959
jensenyorbalott.com

MURRAY & ASSOCIATES P.C.
CONSULTING MECHANICAL ENGINEERS
P O BOX 21081
JUNEAU, AK 99802
MURRAYPC.COM
TEL: 907 780-6151 FAX: 907 780-6182

STATE OF ALASKA
DOUGLAS H. MURRAY
ME 7870
REGISTERED PROFESSIONAL ENGINEER
ISSUE DATE: 10-28-2013

CITY & BOROUGH OF JUNEAU
EAGLECREST LEARNING CENTER
CBJ CONTRACT No. E014-076

REVISIONS

SHEET TITLE
FOUNDATION PLAN

DATE: October 28, 2013
FILE: 13031

M100

SHEET NOTES:

1. SEE DIAGRAMS FOR ADDITIONAL INFORMATION.
2. LOCATE ALL PIPING IN JOIST SPACE EXCEPT AS SPECIFICALLY NOTED WHERE REQUIRED TO DROP BELOW BEAM.

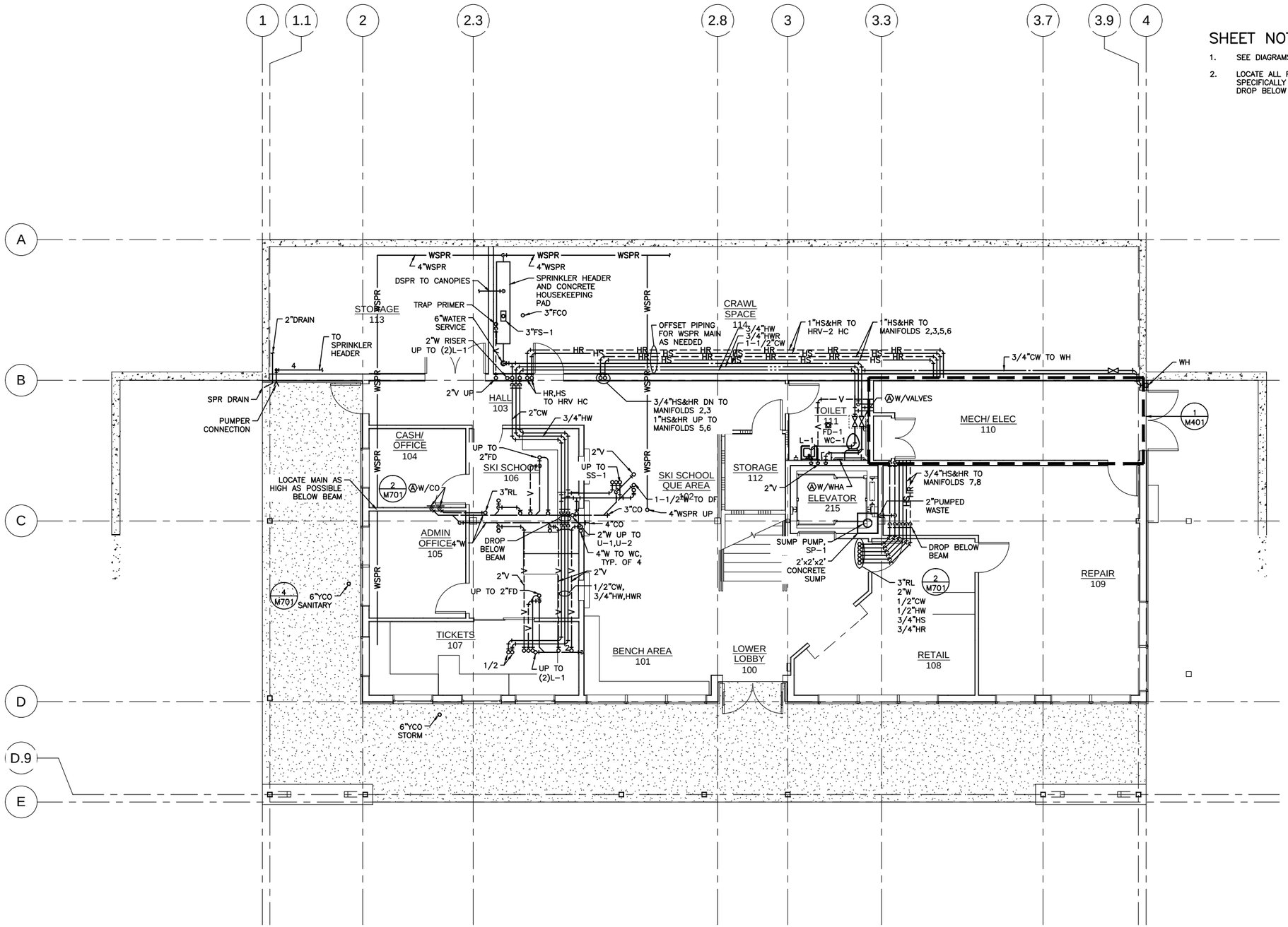

1 **FIRST FLOOR PLAN - PIPING**

SCALE: 0 2' 4' 8' 16'

PROJECT NORTH

Jensen Yorba Lott Inc.

522 West 10th Street
Juneau, Alaska 99801
phone 907-586-1070
fax 907-586-3959
jensenyorbalott.com

MURRAY & ASSOCIATES P.C.
CONSULTING MECHANICAL ENGINEERS
P O BOX 21081
JUNEAU, AK 99802
MURRAYPC.COM
TEL: 907 780-6151 FAX: 907 780-6182

STATE OF ALASKA — 49th — DOUGLAS H. MURRAY — ME 7870 — REGISTERED PROFESSIONAL ENGINEER

ISSUE DATE: 10-28-2013

CITY & BOROUGH OF JUNEAU
EAGLECREST LEARNING CENTER
CBJ CONTRACT No. E014-076

REVISIONS

SHEET TITLE
FIRST FLOOR PLAN - PIPING

DATE: October 28, 2013
FILE: 13031

M101

CONSTRUCTION NOTES:

1. PROVIDE FITTING IN 3"RL PIPING FOR HEAT TRACE CABLE. COORDINATE WITH ELECTRICAL.

SHEET NOTES:

1. SEE DIAGRAMS FOR ADDITIONAL INFORMATION.
2. LOCATE ALL PIPING IN JOIST SPACE EXCEPT AS SPECIFICALLY NOTED WHERE REQUIRED TO DROP BELOW BEAM.

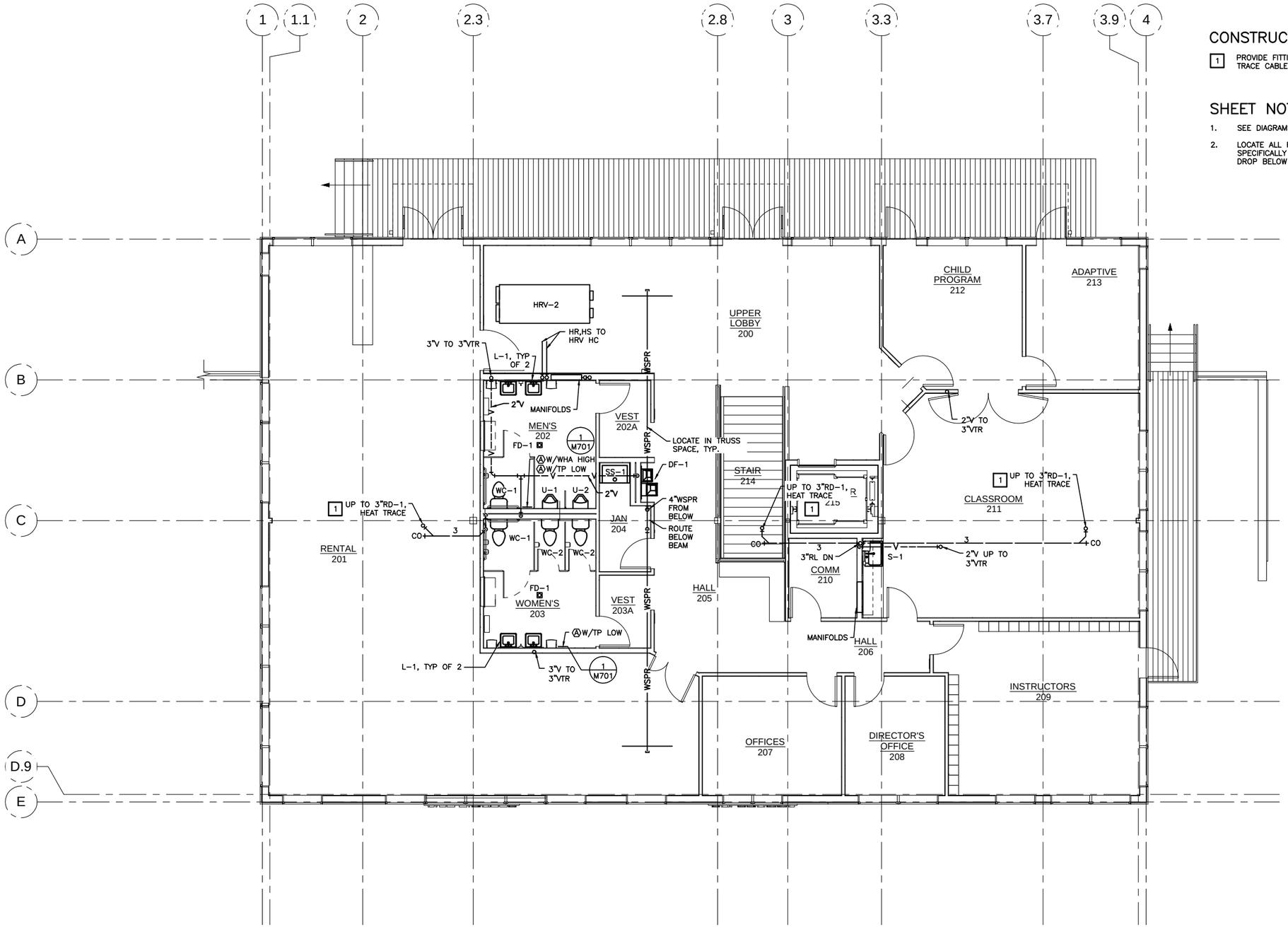

1 SECOND FLOOR PLAN - PIPING

SCALE: 0 2' 4' 8' 16'

PROJECT NORTH

Jensen Yorba Lott Inc.

522 West 10th Street
Juneau, Alaska 99801
phone 907-586-1070
fax 907-586-3959
jensenyorbalott.com

MURRAY & ASSOCIATES P.C.
CONSULTING MECHANICAL ENGINEERS
P O BOX 21081
JUNEAU, AK 99802
MURRAYPC.COM
TEL: 907 780-6151 FAX: 907 780-6182

STATE OF ALASKA — 49th — DOUGLAS H. MURRAY — ME 7870 — REGISTERED PROFESSIONAL ENGINEER

ISSUE DATE: 10-28-2013

CITY & BOROUGH OF JUNEAU
EAGLECREST LEARNING CENTER
CBJ CONTRACT No. E014-076

REVISIONS

SHEET TITLE
SECOND FLOOR PLAN - PIPING

DATE: October 28, 2013
FILE: 13031

M102

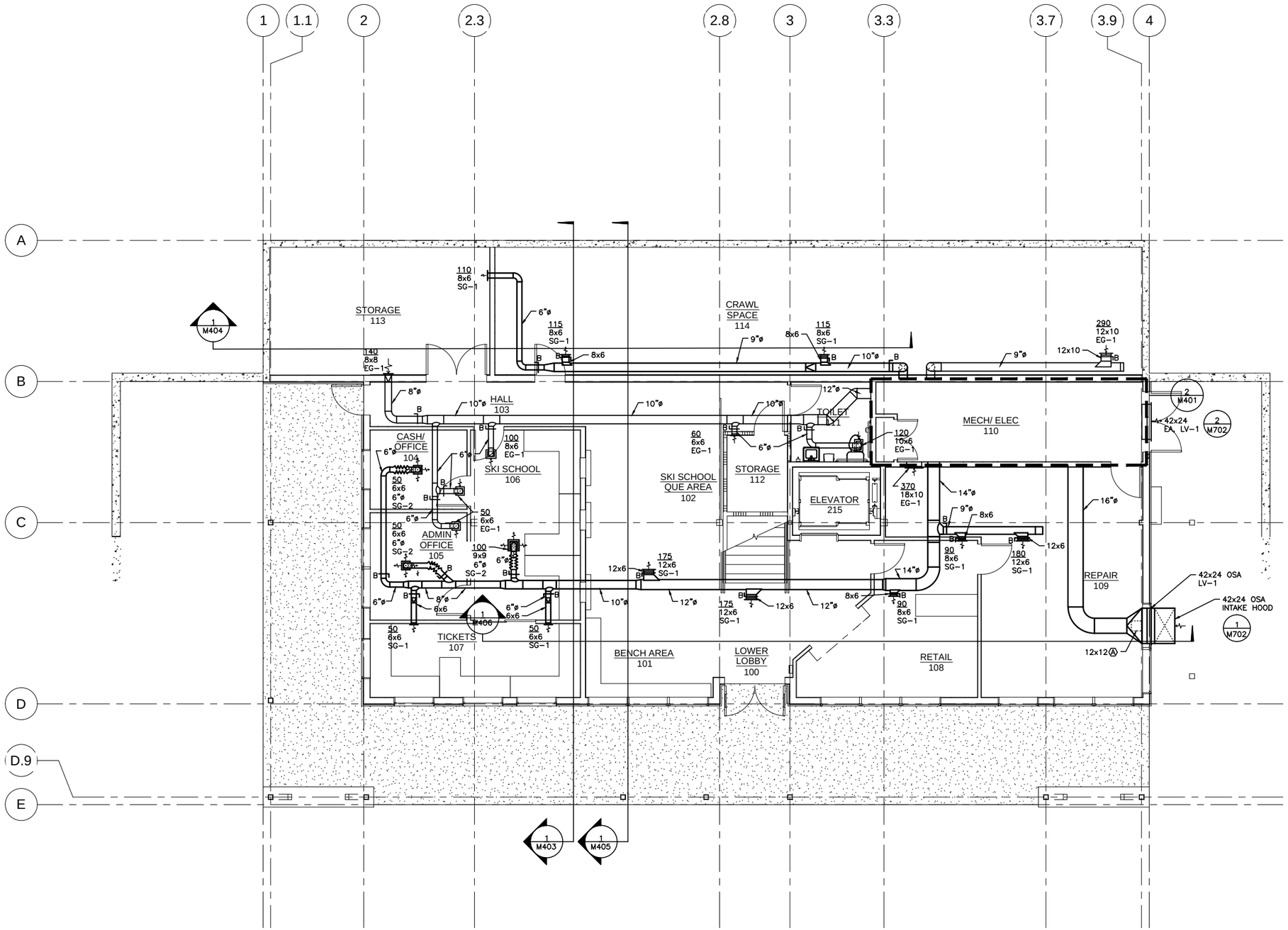

1 **FIRST FLOOR PLAN - DUCTWORK**

SCALE: 0 2' 4' 8' 16'

PROJECT NORTH

Jensen Yorba Lott Inc.

522 West 10th Street
Juneau, Alaska 99801
phone 907-586-1070
fax 907-586-3959
jensenyorbalott.com

MURRAY & ASSOCIATES P.C.
CONSULTING MECHANICAL ENGINEERS
P O BOX 21081
JUNEAU, AK 99802
MURRAYPC.COM
TEL: 907 780-6151 FAX: 907 780-6182

STATE OF ALASKA
DOUGLAS H. MURRAY
ME 7870
REGISTERED PROFESSIONAL ENGINEER
ISSUE DATE: 10-28-2013

CITY & BOROUGH OF JUNEAU
EAGLECREST LEARNING CENTER
CBJ CONTRACT No. E014-076

REVISIONS

SHEET TITLE
FIRST FLOOR PLAN - DUCTWORK

DATE: October 28, 2013
FILE: 13031

M201

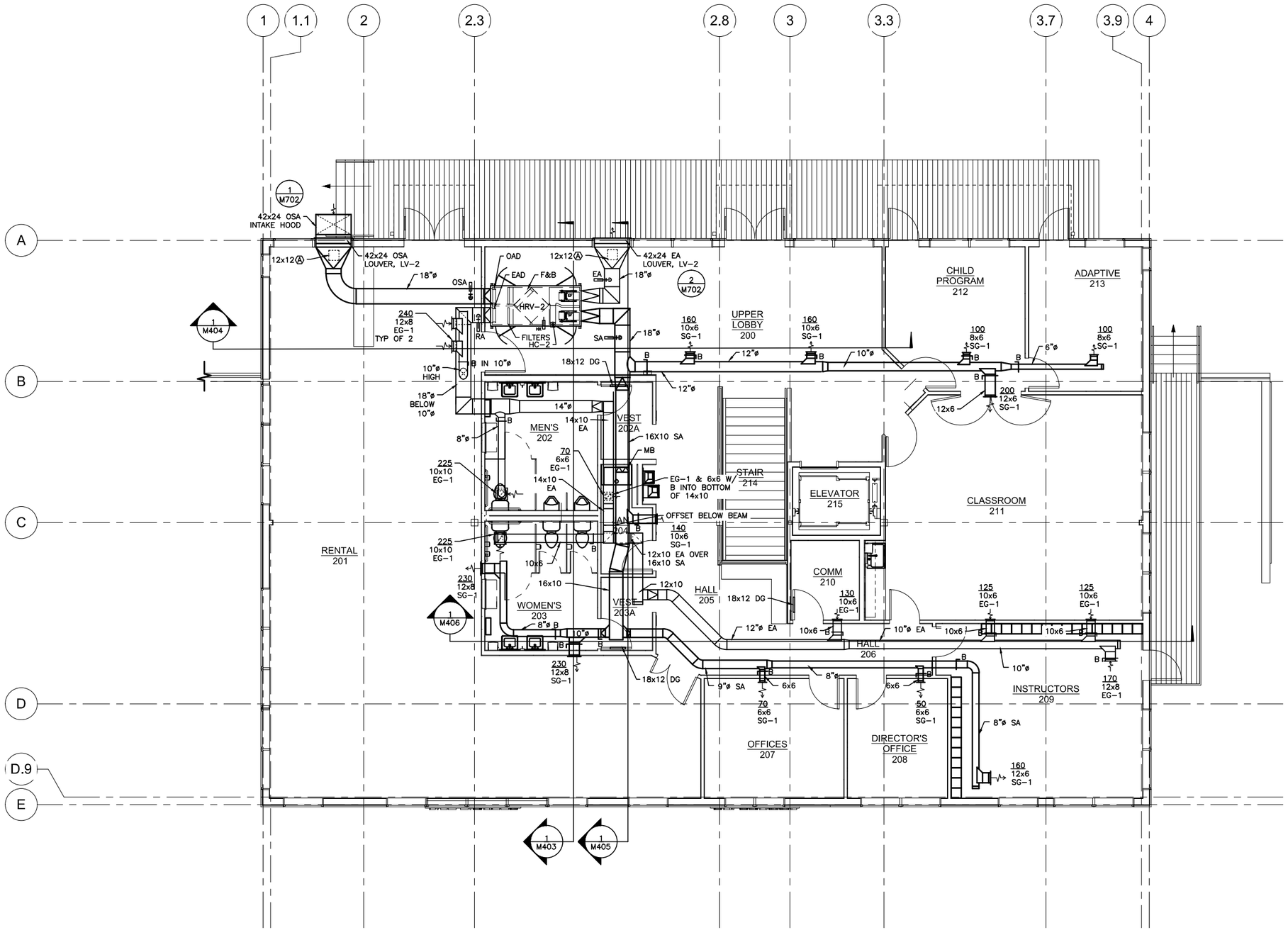

1 **SECOND FLOOR PLAN - DUCTWORK**

SCALE: 0 2' 4' 8' 16'

PROJECT NORTH

Jensen Yorba Lott Inc.

522 West 10th Street
Juneau, Alaska 99801
phone 907-586-1070
fax 907-586-3959
jensenyorbalott.com

MURRAY & ASSOCIATES P.C.
CONSULTING MECHANICAL ENGINEERS
P O BOX 21081
JUNEAU, AK 99802
MURRAYPC.COM
TEL: 907 780-6151 FAX: 907 780-6182

STATE OF ALASKA — 7491 — DOUGLAS H. MURRAY — ME 7870 — REGISTERED PROFESSIONAL ENGINEER

ISSUE DATE: 10-28-2013

CITY & BOROUGH OF JUNEAU
EAGLECREST LEARNING CENTER
CBJ CONTRACT No. E014-076

REVISIONS

SHEET TITLE
SECOND FLOOR PAN - DUCTWORK

DATE: **October 28, 2013**
FILE: **13031**

M202

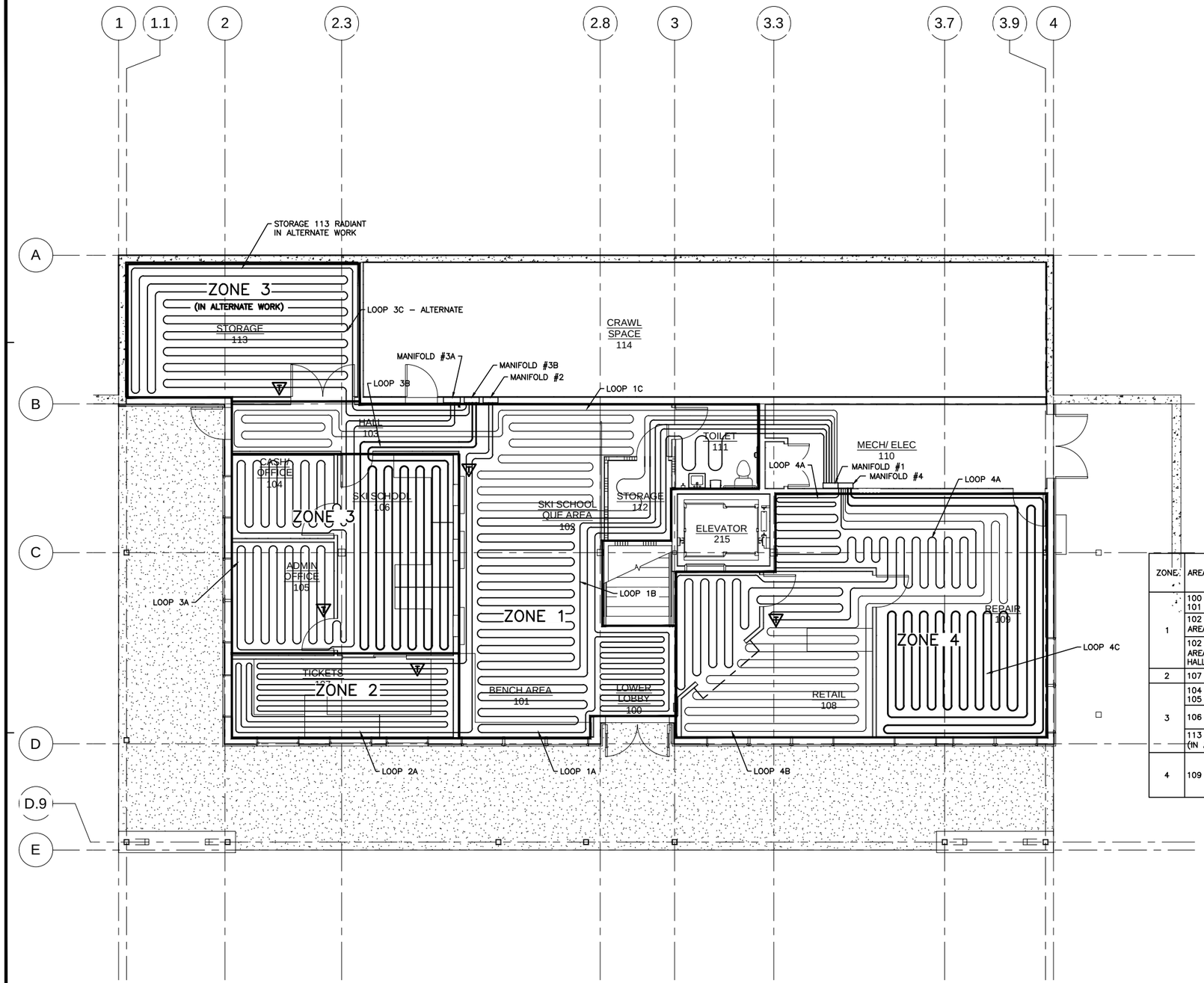

SHEET NOTES:

1. INSTALL RADIANT FLOOR TUBING AS SHOWN. COORDINATE TUBING WITH STRUCTURAL AND GENERAL CONDITIONS.
2. PROVIDE AS–BUILT SHOP DRAWINGS SHOWING TUBING LAYOUT. PROVIDE DIMENSIONS TO STRUCTURAL GRID.
3. UNLESS OTHERWISE NOTED RADIANT TUBING IS GENERALLY ROUTED TO EACH ZONE VIA DOORWAYS.
4. UNLESS OTHERWISE NOTED RADIANT TUBING MANIFOLD TERMINATIONS ARE TO BE INSTALLED IN WALL SPACE.
5. TUBING TO BE INSTALLED IN MIDDLE OF CONCRETE SLAB, SECURE TUBING TO TOP OF WIRE MESH OR REBAR WITH PLASTIC TIES.
6. RADIANT TUBING SHALL BE CROSSLINKED POLYETHYLENE WITH OXYGEN DIFFUSION BARRIER, EQUAL TO UPONOR WIRSBO HEPEX PLUS OR APPROVED EQUAL. 5/8" DIAMETER SIZE FOR FIRST FLOOR.
7. TUBING TERMINATIONS: PROVIDE PROTECTION TO THE TUBING ENTRY AND EXIT OF THE CONCRETE BELOW THE MANIFOLDS WITH 1/2 INCH THICK CLOSED CELL PIPE INSULATION AND WITH EACH INSULATION PIECE APPROXIMATELY 18 INCHES LONG WITH MIDPOINT AT SURFACE OF SLAB.
8. TEST RADIANT TUBING PIPING WITH AIR AT 100 PSI FOR NOT LESS THAN 15 MINUTES WITH NO APPRECIABLE DECREASE IN PRESSURE. TESTING IS TO BE DONE PRIOR TO CONCRETE SLAB INSTALLATION. TEST OBSERVED BY OWNER'S REPRESENTATIVE. AFTER PIPE TEST DECREASE AIR PRESSURE TO 30 PSI AND COVER MANIFOLD FOR PROTECTION. MAINTAIN 30 PSI AND MONITOR FOR LEAKS DURING CONCRETE POUR.
9. SLEEVE PIPING WHERE ROUTED BELOW WALL.
10. SEE DETAILS ON M502 FOR MANIFOLDS CONFIGURATION.

RADIANT HEATING SCHEDULE

ZONE	AREA SERVED	LOOP	TUBE SPACING I.O.C	ESTIMATED TUBE LENGTH FT	CIRCUIT GPM	MANIFOLD GPM	MANIFOLD #	TUBING SIZE
1	100 LOWER LOBBY 101 BENCH AREA	A	6 9	280	1	3	1	5/8"
	102 SKI SCHOOL QUE AREA (PARTIAL)	B	9	280			1	5/8"
	102 SKI SCHOOL QUE AREA (PARTIAL) HALL 103	C	9 9	280			1	5/8"
2	107 TICKETS	A	6	346	0.5	0.5	2	5/8"
3	104 CASH/OFFICE 105 ADMIN OFFICE	A	9	288	0.4	0.4	3A	5/8"
	106 SKI SCHOOL	B	12	231	0.15	0.3	3B	5/8"
	113 STORAGE (IN ALTERNATE WORK)	C	12	307			3B	5/8"
4	109 REPAIR	A	9	310	0.4	1.2	4	5/8"
		B		310			4	5/8"
		C		310			4	5/8"

1 **1ST FLOOR RADIANT HEATING PLAN**

SCALE: 0 2' 4' 8' 16'

PROJECT NORTH

Jensen Yorba Lott Inc.
522 West 10th Street
Juneau, Alaska 99801
phone 907-586-1070
fax 907-586-3959
jensenyorbalott.com

MURRAY & ASSOCIATES P.C.
CONSULTING MECHANICAL ENGINEERS
P O BOX 21081
JUNEAU, AK 99802
MURRAYPC.COM
TEL: 907 780-6151 FAX: 907 780-6182

STATE OF ALASKA — 49th — DOUGLAS H. MURRAY — ME 7870 — REGISTERED PROFESSIONAL ENGINEER

ISSUE DATE: 10-28-2013

CITY & BOROUGH OF JUNEAU
EAGLECREST LEARNING CENTER
CBJ CONTRACT No. E014-076

REVISIONS

SHEET TITLE
FIRST FLOOR RADIANT PLAN

DATE: October 28, 2013
FILE: 13031

M301

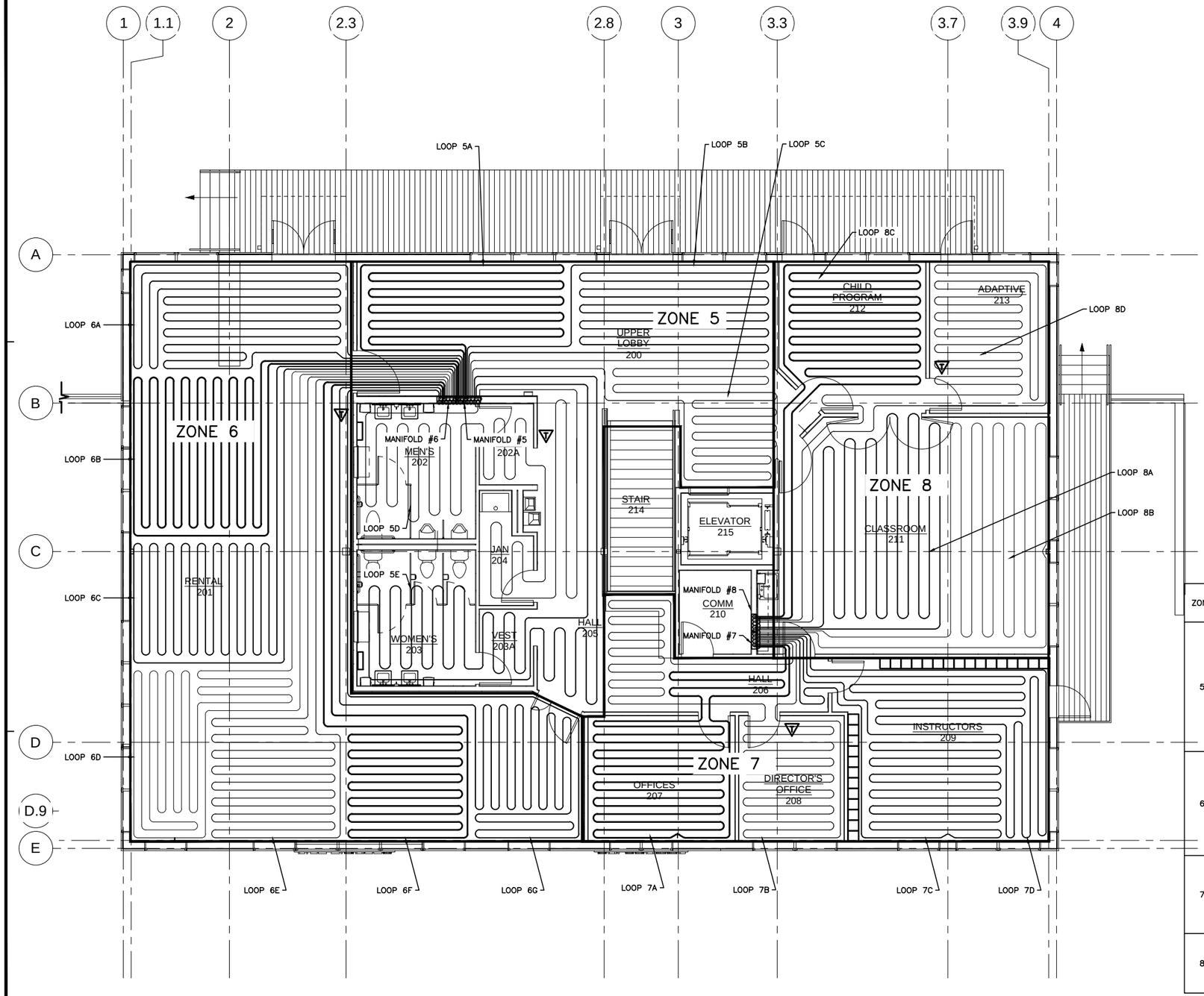

SHEET NOTES:

1. INSTALL RADIANT FLOOR TUBING AS SHOWN. COORDINATE TUBING WITH STRUCTURAL AND GENERAL CONDITIONS.
2. PROVIDE AS-BUILT SHOP DRAWINGS SHOWING TUBING LAYOUT. PROVIDE DIMENSIONS TO STRUCTURAL GRID.
3. UNLESS OTHERWISE NOTED RADIANT TUBING IS GENERALLY ROUTED TO EACH ZONE VIA DOORWAYS.
4. UNLESS OTHERWISE NOTED RADIANT TUBING MANIFOLD TERMINATIONS ARE TO BE INSTALLED IN WALL SPACE.
5. TUBING TO BE INSTALLED IN MIDDLE OF CONCRETE SLAB, SECURE TUBING TO TOP OF WIRE MESH OR REBAR WITH PLASTIC TIES.
6. RADIANT TUBING SHALL BE CROSSLINKED POLYETHYLENE WITH OXYGEN DIFFUSION BARRIER, EQUAL TO UPONOR WIRSBO HEPEX PLUS OR APPROVED EQUAL. 1/2" DIAMETER SIZE FOR 2ND FLOOR
7. TUBING TERMINATIONS: PROVIDE PROTECTION TO THE TUBING ENTRY AND EXIT OF THE CONCRETE BELOW THE MANIFOLDS WITH 1/2 INCH THICK CLOSED CELL PIPE INSULATION AND WITH EACH INSULATION PIECE APPROXIMATELY 18 INCHES LONG WITH MIDPOINT AT SURFACE OF SLAB.
8. TEST RADIANT TUBING PIPING WITH AIR AT 100 PSI FOR NOT LESS THAN 15 MINUTES WITH NO APPRECIABLE DECREASE IN PRESSURE. TESTING IS TO BE DONE PRIOR TO CONCRETE SLAB INSTALLATION. TEST OBSERVED BY OWNER'S REPRESENTATIVE. AFTER PIPE TEST DECREASE AIR PRESSURE TO 30 PSI AND COVER MANIFOLD FOR PROTECTION. MAINTAIN 30 PSI AND MONITOR FOR LEAKS DURING CONCRETE POUR.
9. SLEEVE PIPING WHERE ROUTED BELOW WALLS.
10. SEE DETAILS ON M502 FOR MANIFOLDS CONFIGURATION.

RADIANT HEATING SCHEDULE

ZONE	AREA SERVED	LOOP	TUBE SPACING I.O.C	ESTIMATED TUBE LENGTH FT	CIRCUIT GPM	MANIFOLD GPM	MANIFOLD #	TUBE SIZE
5	200 UPPER LOBBY	A	9	230	0.5	1.9	5	1/2"
		B		230	0.5		5	1/2"
		C		230	0.5		5	1/2"
	202 MEN'S 202A VEST 204 JAN 205 HALL (PARTIAL)	D	12	250	0.2		5	1/2"
	203 WOMEN'S 203A VEST 205 HALL (PARTIAL)	E	12	250	0.2		5	1/2"
6	201 RENTAL	A	9	302	0.3	2.1	6	1/2"
		B		322	0.3		6	1/2"
		C		305	0.3		6	1/2"
		D		302	0.3		6	1/2"
		E		291	0.3		6	1/2"
		F		282	0.3		6	1/2"
		G		292	0.3		6	1/2"
7	207 OFFICES 206 HALL (PARTIAL)	A	9	275	0.3	1.2	7	1/2"
	208 DIRECTOR'S OFFICE 206 HALL (PARTIAL)	B		279	0.3		7	1/2"
	209 INSTRUCTORS	C		230	0.3		7	1/2"
		D		230	0.3		7	1/2"
8	211 CLASSROOM	A	12	246	0.4	1.8	8	1/2"
		B		255	0.4		8	1/2"
	212 CHILD PROGRAM	C	9	262	0.4		8	1/2"
	213 ADAPTIVE	D		277	0.6		8	1/2"

1 **2ND FLOOR RADIANT HEATING PLAN**

SCALE: 0 2' 4' 8' 16'

PROJECT NORTH

Jensen Yorba Lott Inc.
522 West 10th Street
Juneau, Alaska 99801
phone 907-586-1070
fax 907-586-3959
jensenyorbalott.com

MURRAY & ASSOCIATES P.C.
CONSULTING MECHANICAL ENGINEERS
P O BOX 21081
JUNEAU, AK 99802
MURRAYPC.COM
TEL: 907 780-6151 FAX: 907 780-6182

STATE OF ALASKA
DOUGLAS H. MURRAY
ME 7870
REGISTERED PROFESSIONAL ENGINEER
ISSUE DATE: 10-28-2013

CITY & BOROUGH OF JUNEAU
EAGLECREST LEARNING CENTER
CBJ CONTRACT No. E014-076

REVISIONS

SHEET TITLE
SECOND FLOOR RADIANT PLAN

DATE: **October 28, 2013**
FILE: **13031**

M302

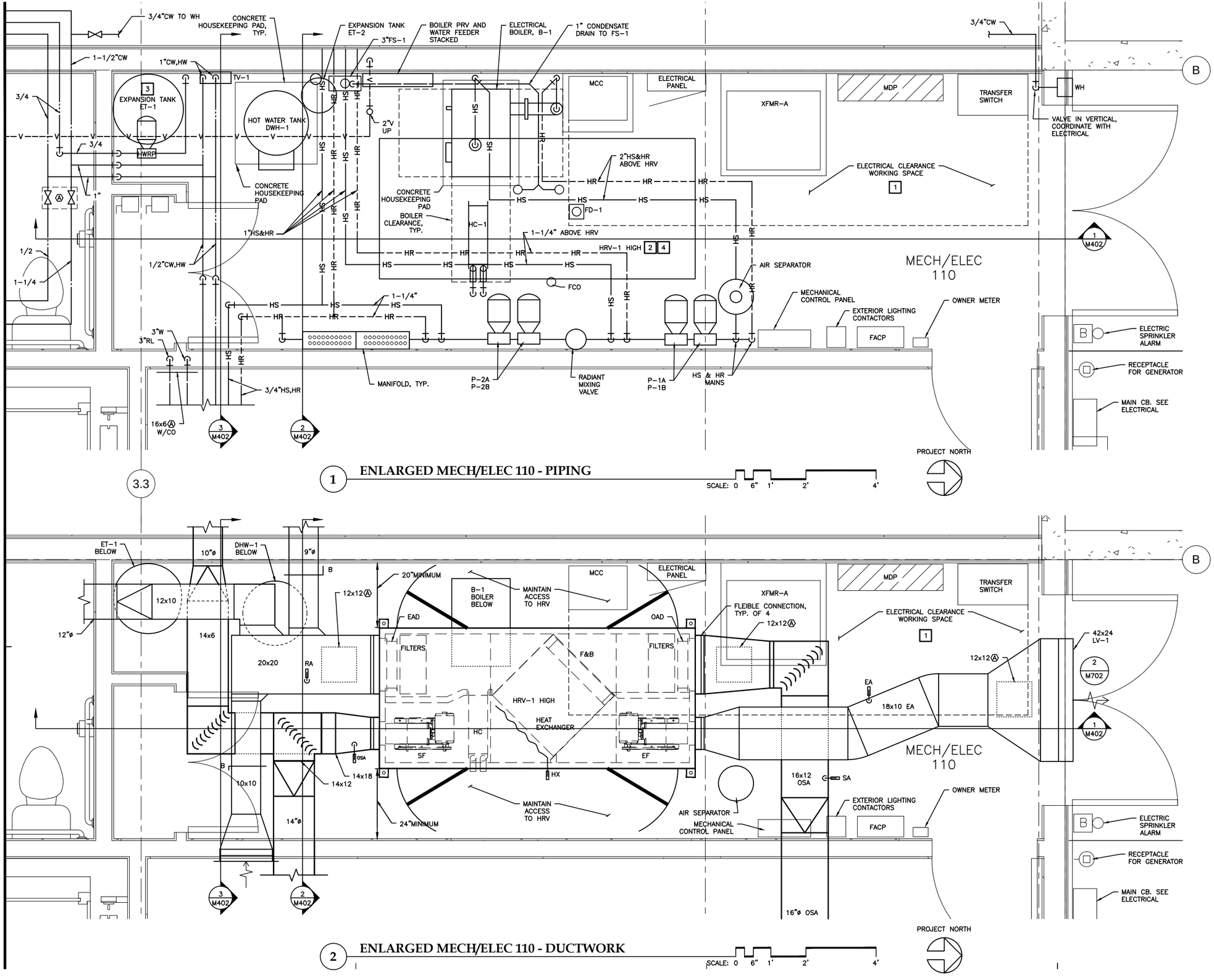

1 ENLARGED MECH/ELEC 110 - PIPING

SCALE: 0 6" 1' 2' 4'

2 ENLARGED MECH/ELEC 110 - DUCTWORK

SCALE: 0 6" 1' 2' 4'

3.3

SHEET NOTES:

1. SEE PIPING DIAGRAMS FOR COMPLETE PIPING CONFIGURATION, SIZING, VALVES, AND ALL RELATED APPURTENANCES.
2. ALL CONCRETE HOUSEKEEPING PADS SHALL BE MINIMUM 3-INCHES HIGH, REINFORCED CONCRETE. PAD SHALL EXTEND 4-INCHES EACH SIDE OF EQUIPMENT CONNECTION.
3. COORDINATE LOCATION AND REQUIREMENTS OF CONTROL DEVICES WITH CONTROL DRAWINGS.

CONSTRUCTION NOTES:

1. MAINTAIN 6'-6" MINIMUM HEIGHT CLEARANCE THIS SPACE. ELECTRICAL PANELS AND EQUIPMENT MUST BE CLEAR ABOVE PANEL AND EQUIPMENT FOOT PRINT TO STRUCTURE.
2. HANG HRV FROM SEISMICALLY RESTRAINED VIBRATION ISOLATORS.
3. SECURE EXPANSION TANK, ET-1 TO FLOOR AND WALL.
4. ROUTE HRV CONDENSATE DRAINS TO FLOOR SINK.

Jensen Yorba Lott Inc.
522 West 10th Street
Juneau, Alaska 99801
phone 907-586-1070
fax 907-586-3959
jensenyorbalott.com

MURRAY & ASSOCIATES P.C.
CONSULTING MECHANICAL ENGINEERS
P O BOX 21081
JUNEAU, AK 99802
MURRAYPC.COM
TEL: 907 780-6151 FAX: 907 780-6182

STATE OF ALASKA
DOUGLAS H. MURRAY
ME 7870
REGISTERED PROFESSIONAL ENGINEER
ISSUE DATE: 10-28-2013

CITY & BOROUGH OF JUNEAU
EAGLECREST LEARNING CENTER
CBJ CONTRACT No. E014-076

REVISIONS

SHEET TITLE
MECH ROOM ENLARGED PLAN

DATE: October 28, 2013
FILE: 13031

M401

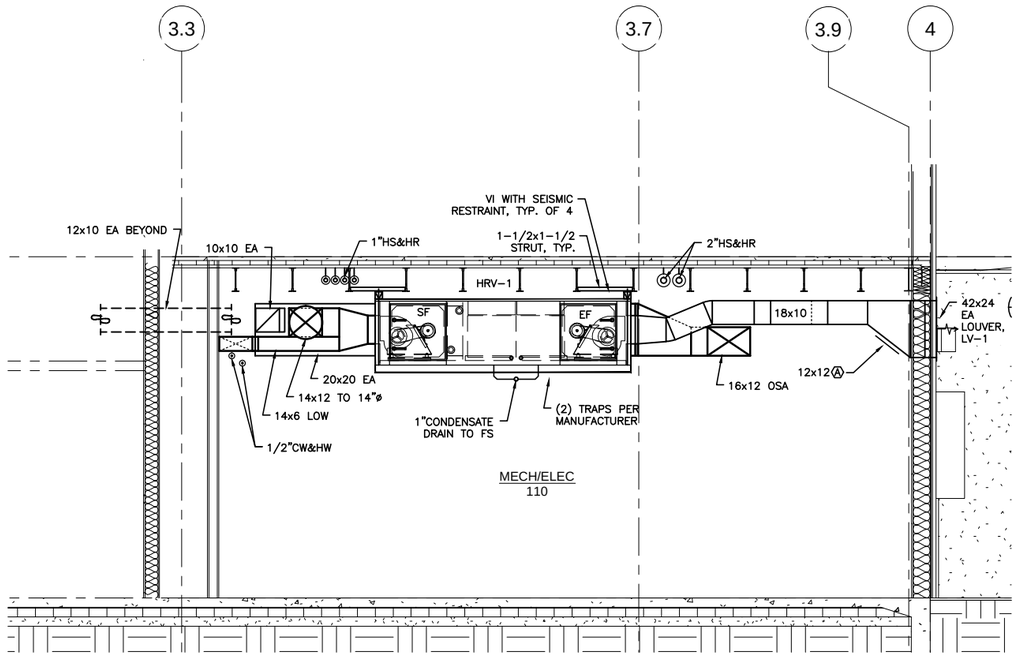

1 **MECH/ELEC 110 SECTION**

SCALE: 0 2' 4' 8'

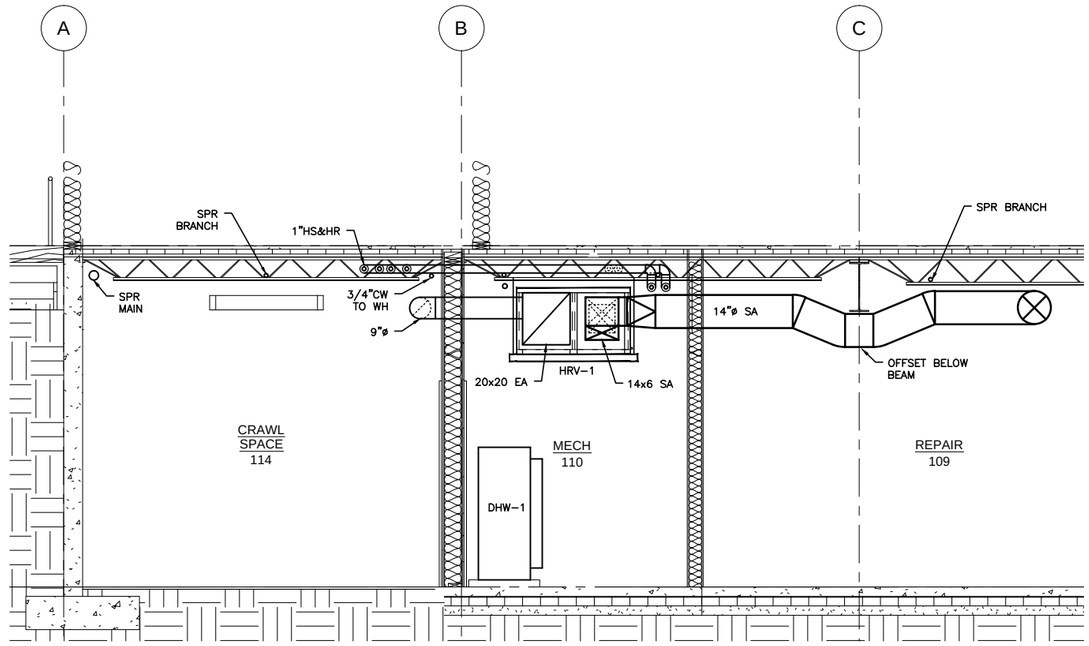

2 **MECH/ELEC 110 SECTION**

SCALE: 0 2' 4' 8'

SHEET NOTES:

1. NOT ALL SYSTEMS ARE SHOWN, PARTICULARLY PIPING. SEE FLOOR PLANS AND DIAGRAMS FOR COMPLETE INFORMATION.

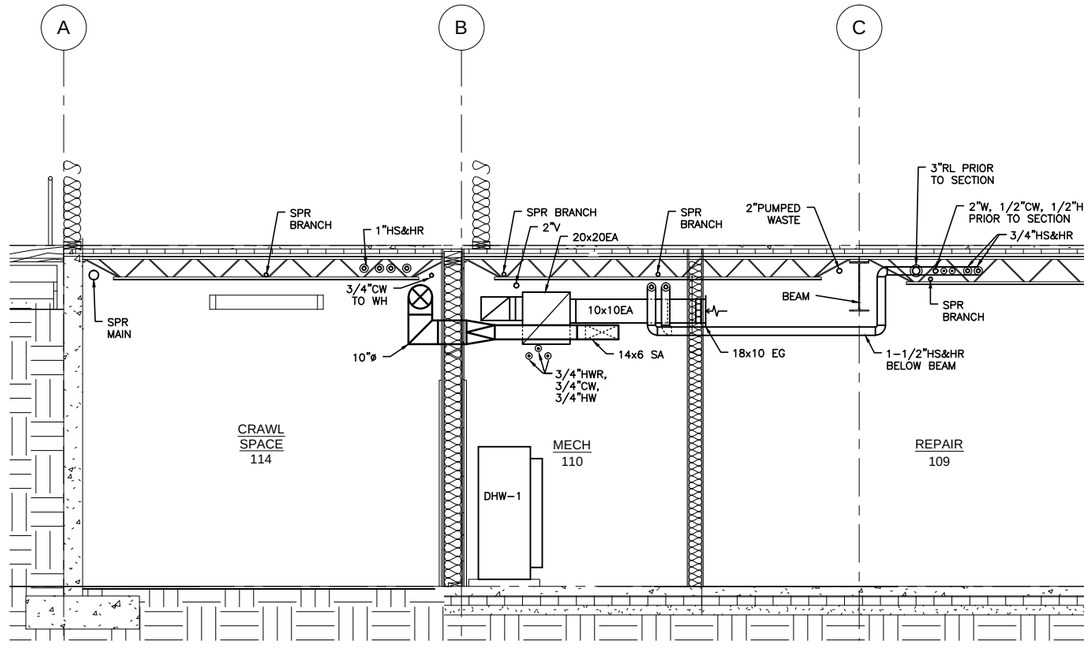

3 **MECH/ELEC 110 SECTION**

SCALE: 0 2' 4' 8'

Jensen Yorba Lott Inc.
522 West 10th Street
Juneau, Alaska 99801
phone 907-586-1070
fax 907-586-3959
jensenyorbalott.com

MURRAY & ASSOCIATES P.C.
CONSULTING MECHANICAL ENGINEERS
P O BOX 21081
JUNEAU, AK 99802
MURRAYPC.COM
TEL: 907 780-6151 FAX: 907 780-6182

STATE OF ALASKA
DOUGLAS H. MURRAY
ME 7870
REGISTERED PROFESSIONAL ENGINEER
ISSUE DATE: 10-28-2013

CITY & BOROUGH OF JUNEAU
EAGLECREST LEARNING CENTER
CBJ CONTRACT No. E014-076

REVISIONS

SHEET TITLE
MECHANICAL ROOM SECTION

DATE: October 28, 2013
FILE: 13031

M402

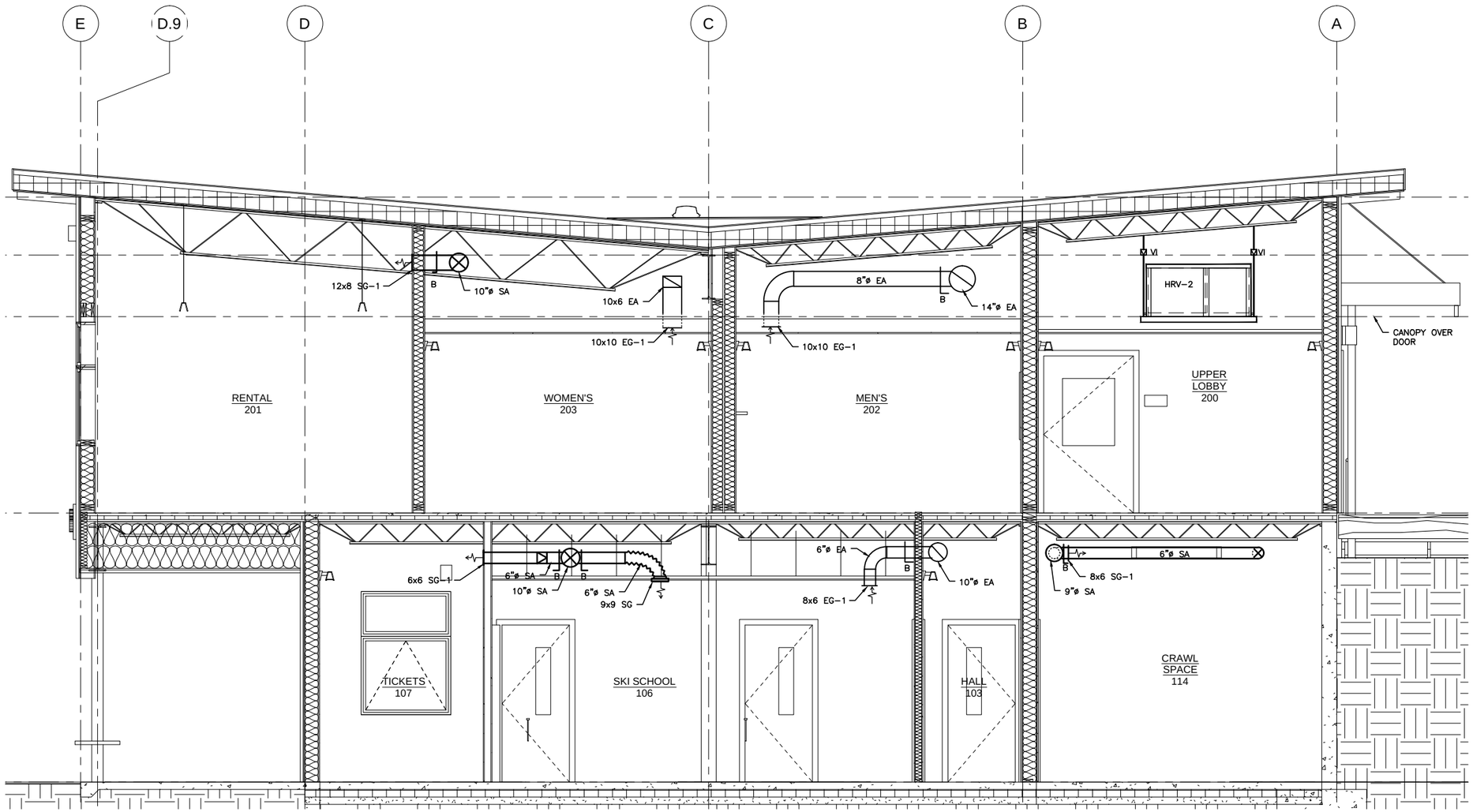

SHEET NOTES:

1. NOT ALL SYSTEMS ARE SHOWN, PARTICULARLY PIPING. SEE FLOOR PLANS AND DIAGRAMS FOR COMPLETE INFORMATION.

1 **SECTION - GRID 2.5**

SCALE: 0 2' 4' 8'

Jensen Yorba Lott Inc.

522 West 10th Street
Juneau, Alaska 99801
phone 907-586-1070
fax 907-586-3959
jensenyorbalott.com

MURRAY & ASSOCIATES P.C.
CONSULTING MECHANICAL ENGINEERS
P O BOX 21081
JUNEAU, AK 99802
MURRAYPC.COM
TEL: 907 780-6151 FAX: 907 780-6182

STATE OF ALASKA
DOUGLAS H. MURRAY
ME 7870
REGISTERED PROFESSIONAL ENGINEER
ISSUE DATE: 10-28-2013

CITY & BOROUGH OF JUNEAU
EAGLECREST LEARNING CENTER
CBJ CONTRACT No. E014-076

REVISIONS

SHEET TITLE
SECTION - GRID 2.5

DATE: **October 28, 2013**
FILE: **13031**

M403

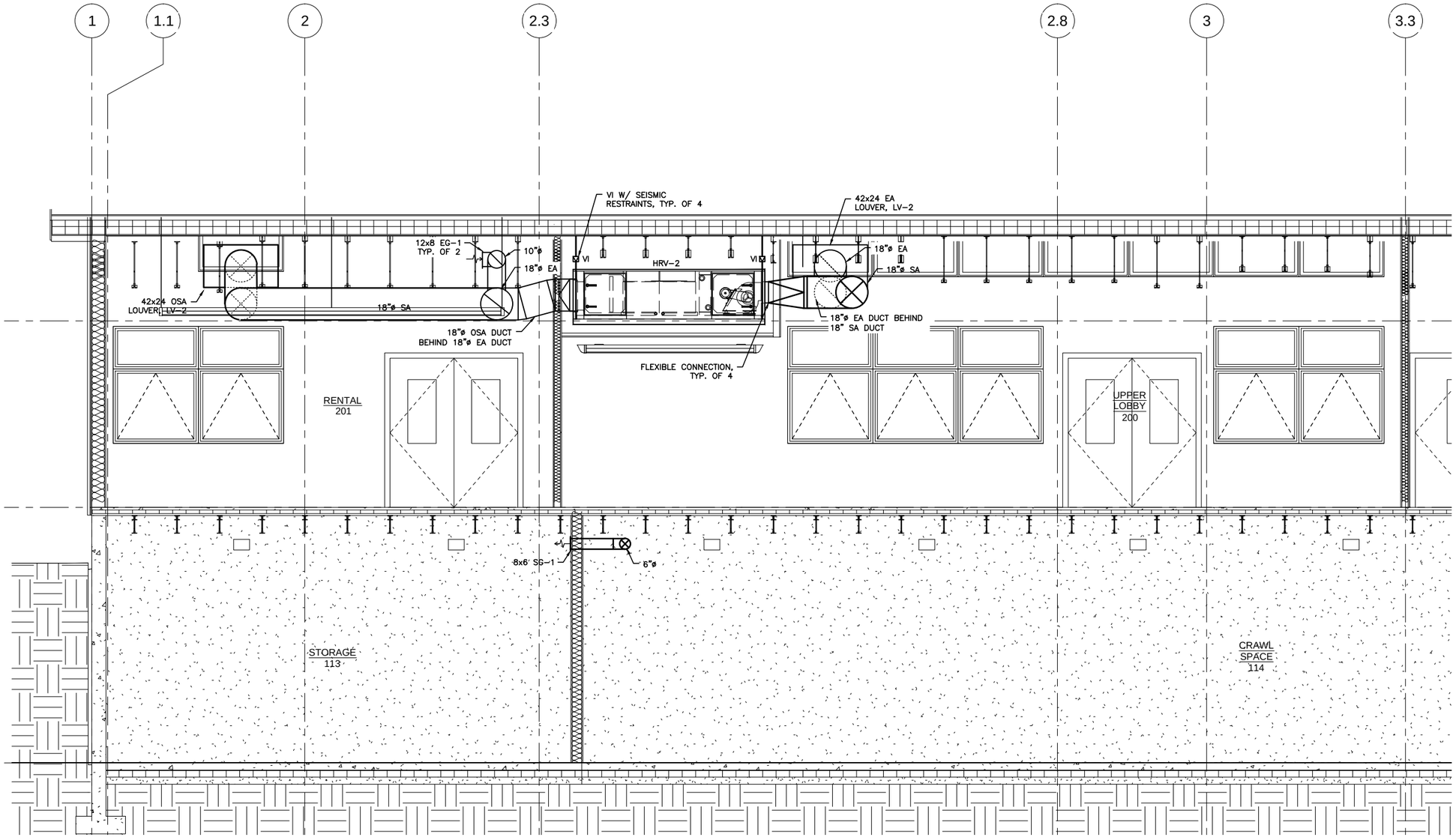

SHEET NOTES:

1. NOT ALL SYSTEMS ARE SHOWN, PARTICULARLY PIPING. SEE FLOOR PLANS AND DIAGRAMS FOR COMPLETE INFORMATION.

1 **SECTION - GRID A.6**

SCALE: 0 2' 4' 8'

Jensen Yorba Lott Inc.

522 West 10th Street
Juneau, Alaska 99801
phone 907-586-1070
fax 907-586-3959
jensenyorbalott.com

MURRAY & ASSOCIATES P.C.
CONSULTING MECHANICAL ENGINEERS
P O BOX 21081
JUNEAU, AK 99802
MURRAYPC.COM
TEL: 907 780-6151 FAX: 907 780-6182

STATE OF ALASKA — DOUGLAS H. MURRAY — ME 7870 — REGISTERED PROFESSIONAL ENGINEER

ISSUE DATE: 10-28-2013

CITY & BOROUGH OF JUNEAU
EAGLECREST LEARNING CENTER
CBJ CONTRACT No. E014-076

REVISIONS

SHEET TITLE
SECTION - GRID A.6

DATE: **October 28, 2013**
FILE: **13031**

M404

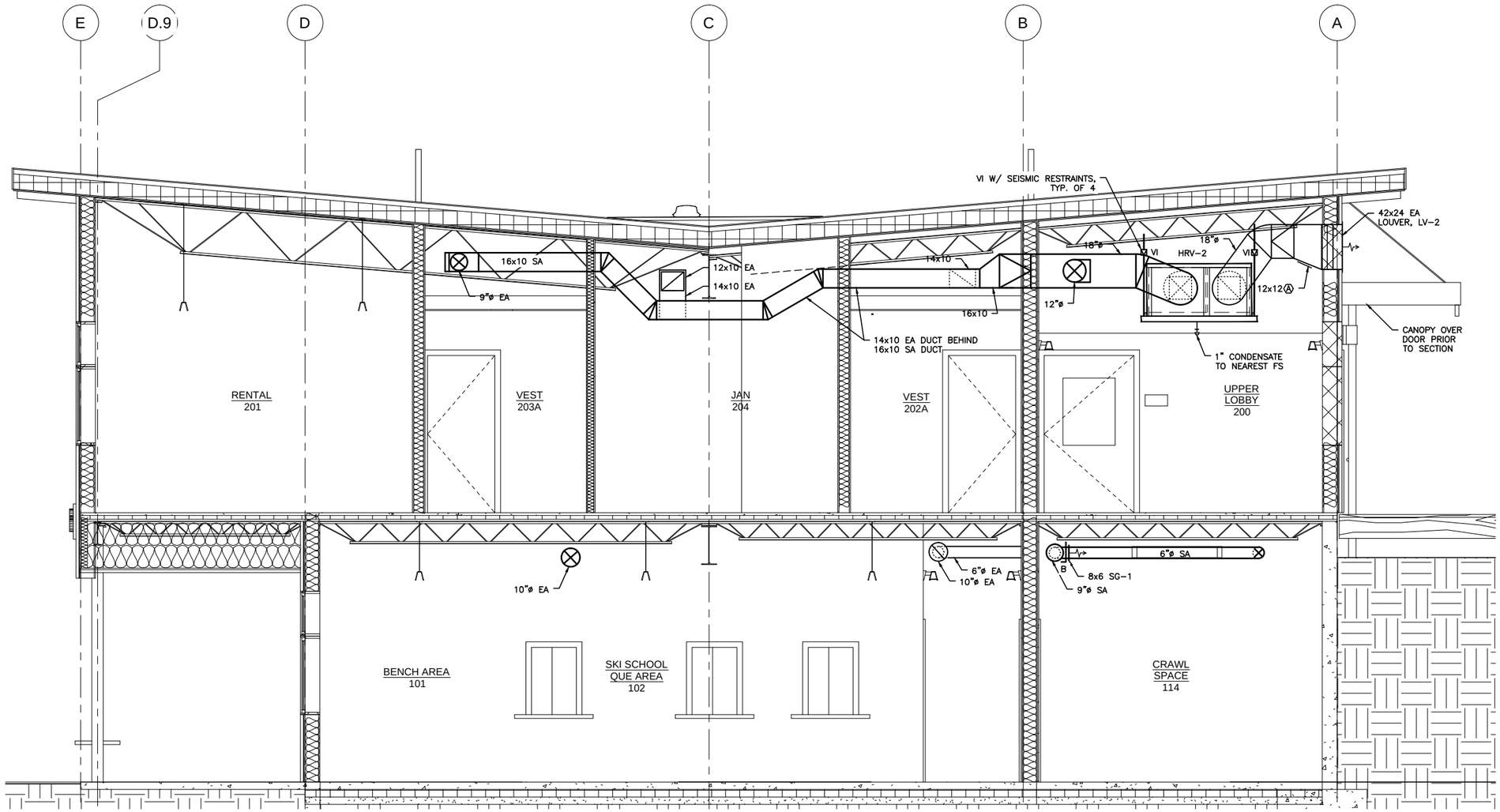

SHEET NOTES:

1. NOT ALL SYSTEMS ARE SHOWN, PARTICULARLY PIPING. SEE FLOOR PLANS AND DIAGRAMS FOR COMPLETE INFORMATION.

1 **SECTION - GRID 2.6**

SCALE: 0 2' 4' 8'

Jensen Yorba Lott Inc.

522 West 10th Street
Juneau, Alaska 99801
phone 907-586-1070
fax 907-586-3959
jensenyorbalott.com

MURRAY & ASSOCIATES P.C.
CONSULTING MECHANICAL ENGINEERS
P O BOX 21081
JUNEAU, AK 99802
MURRAYPC.COM
TEL: 907 780-6151 FAX: 907 780-6182

STATE OF ALASKA — 49th — DOUGLAS H. MURRAY — ME 7870 — REGISTERED PROFESSIONAL ENGINEER

ISSUE DATE: 10-28-2013

CITY & BOROUGH OF JUNEAU
EAGLECREST LEARNING CENTER
CBJ CONTRACT No. E014-076

REVISIONS

SHEET TITLE
SECTION - GRID 2.6

DATE: October 28, 2013
FILE: 13031

M405

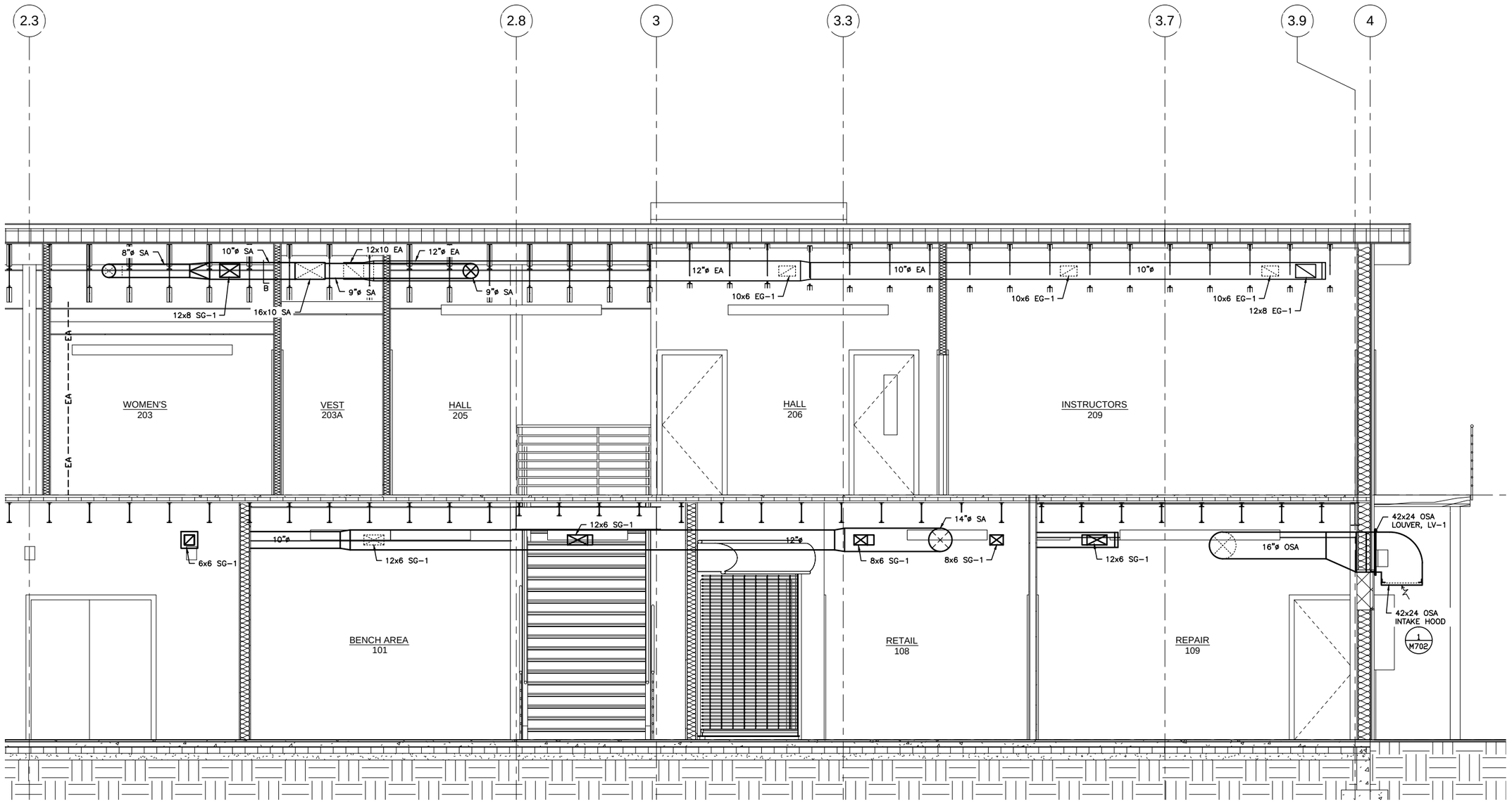

SHEET NOTES:

1. NOT ALL SYSTEMS ARE SHOWN, PARTICULARLY PIPING. SEE FLOOR PLANS AND DIAGRAMS FOR COMPLETE INFORMATION.

1 **SECTION - GRID C.8**

SCALE: 0 2' 4' 8'

Jensen Yorba Lott Inc.

522 West 10th Street
Juneau, Alaska 99801
phone 907-586-1070
fax 907-586-3959
jensenyorbalott.com

MURRAY & ASSOCIATES P.C.
CONSULTING MECHANICAL ENGINEERS
P O BOX 21081
JUNEAU, AK 99802
MURRAYPC.COM
TEL: 907 780-6151 FAX: 907 780-6182

STATE OF ALASKA
DOUGLAS H. MURRAY
ME 7870
REGISTERED PROFESSIONAL ENGINEER
ISSUE DATE: 10-28-2013

CITY & BOROUGH OF JUNEAU
EAGLECREST LEARNING CENTER
CBJ CONTRACT No. E014-076

REVISIONS

SHEET TITLE
SECTION - GRID C.8

DATE: October 28, 2013
FILE: 13031

M406

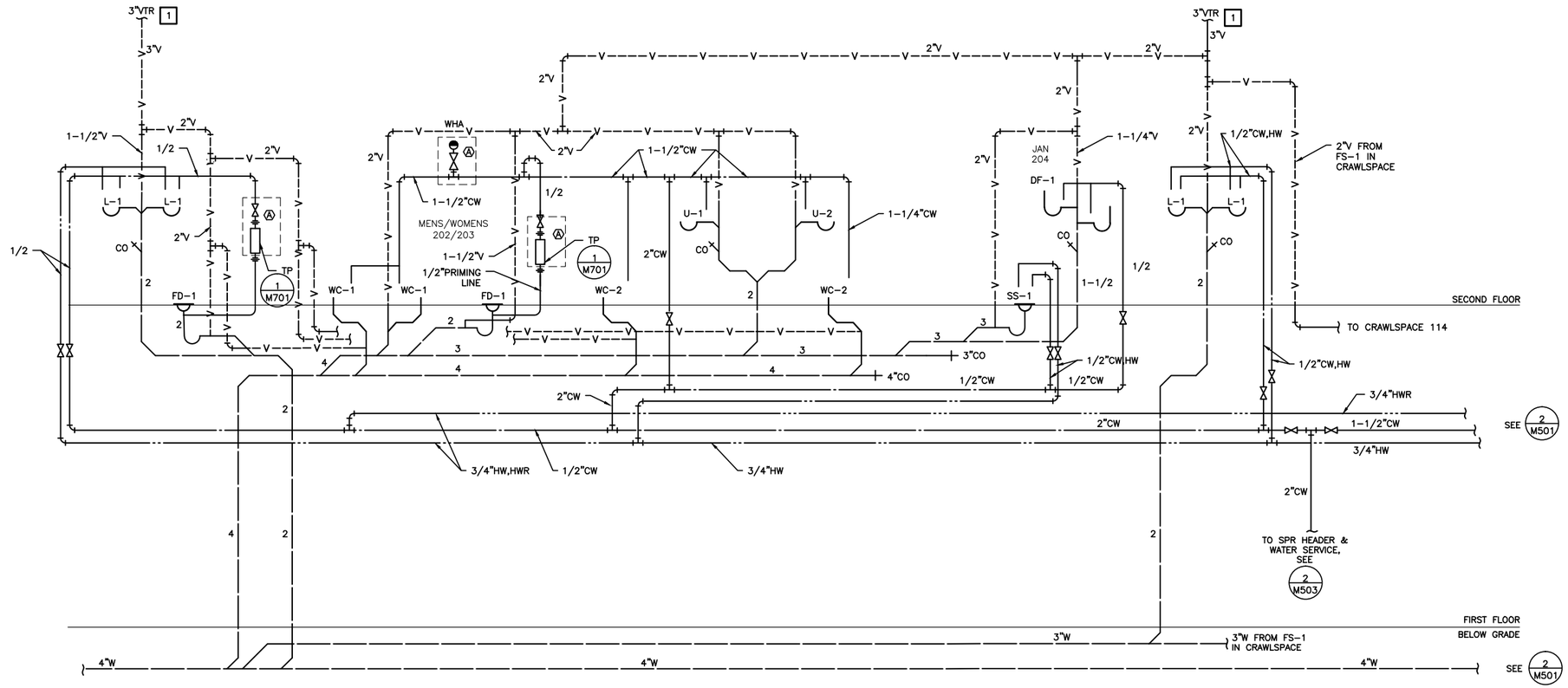

1 PLUMBING DIAGRAM

NO SCALE

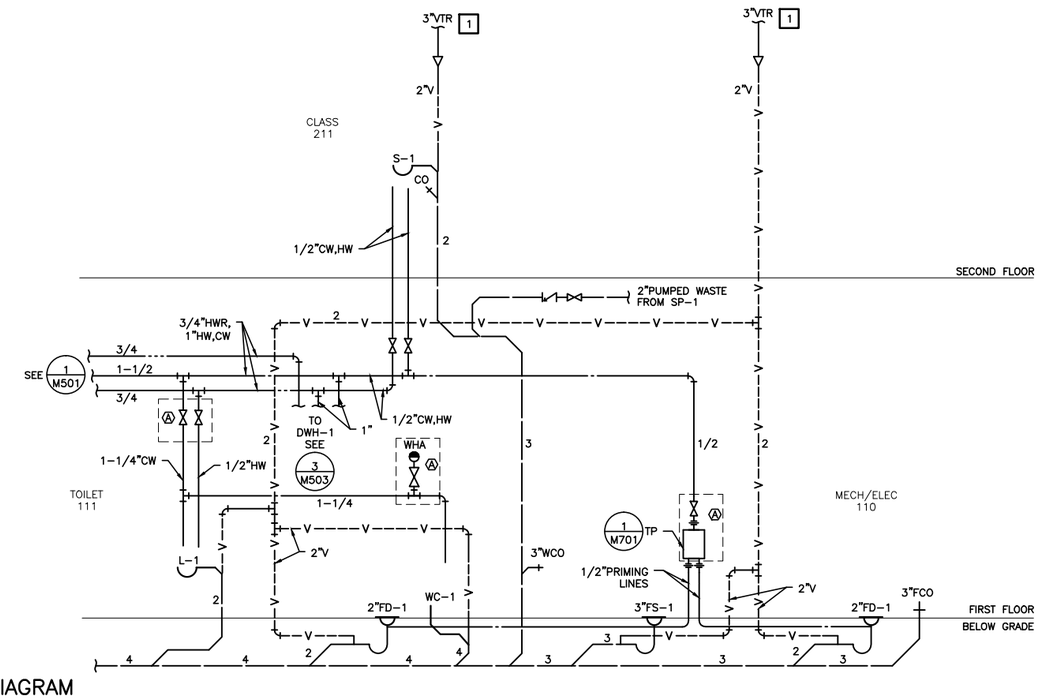

2 PLUMBING DIAGRAM

NO SCALE

CONSTRUCTION NOTES:

1 EXTEND VTR PIPING 24-INCHES ABOVE ROOF.

Jensen Yorba Lott Inc.

522 West 10th Street
Juneau, Alaska 99801
phone 907-586-1070
fax 907-586-3959
jensenyorbalott.com

MURRAY & ASSOCIATES P.C.
CONSULTING MECHANICAL ENGINEERS
P O BOX 21081
JUNEAU, AK 99802
MURRAYPC.COM
TEL: 907 780-6151 FAX: 907 780-6182

STATE OF ALASKA
DOUGLAS H. MURRAY JR.
ME 7870
REGISTERED PROFESSIONAL ENGINEER
ISSUE DATE: 10-28-2013

CITY & BOROUGH OF JUNEAU
EAGLECREST LEARNING CENTER
CBJ CONTRACT No. E014-076

REVISIONS

SHEET TITLE
PLUMBING DIAGRAM

DATE: October 28, 2013
FILE: 13031

M501

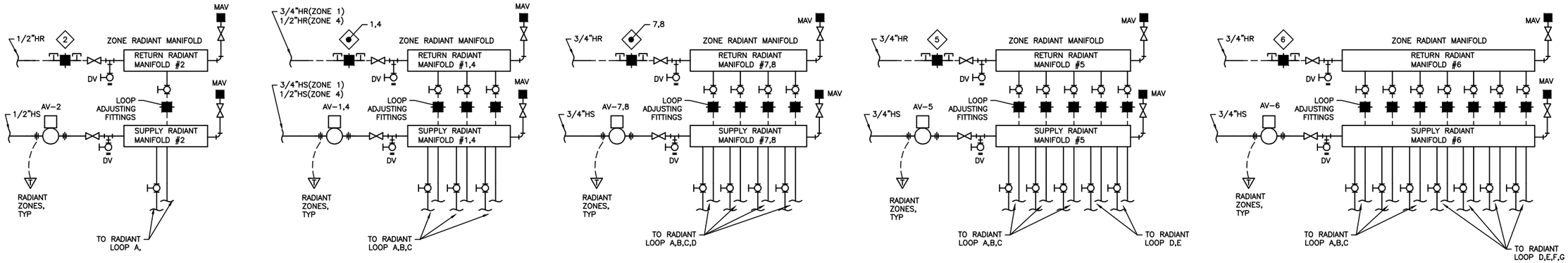

1 RADIANT HEATING MANIFOLDS #1, 2, 4, 5, 6, 7, 8

NO SCALE

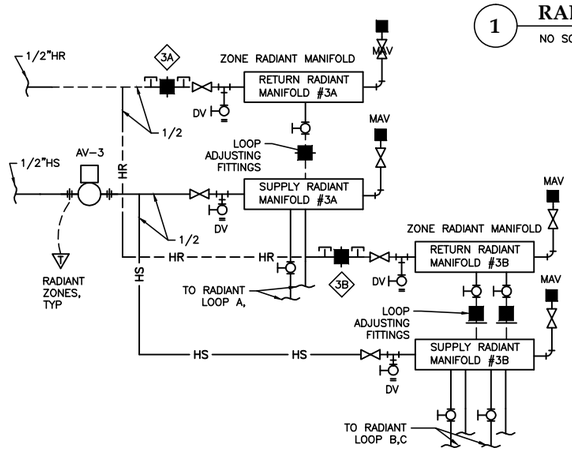

2 RADIANT HEATING MANIFOLDS #3A, 3B

NO SCALE

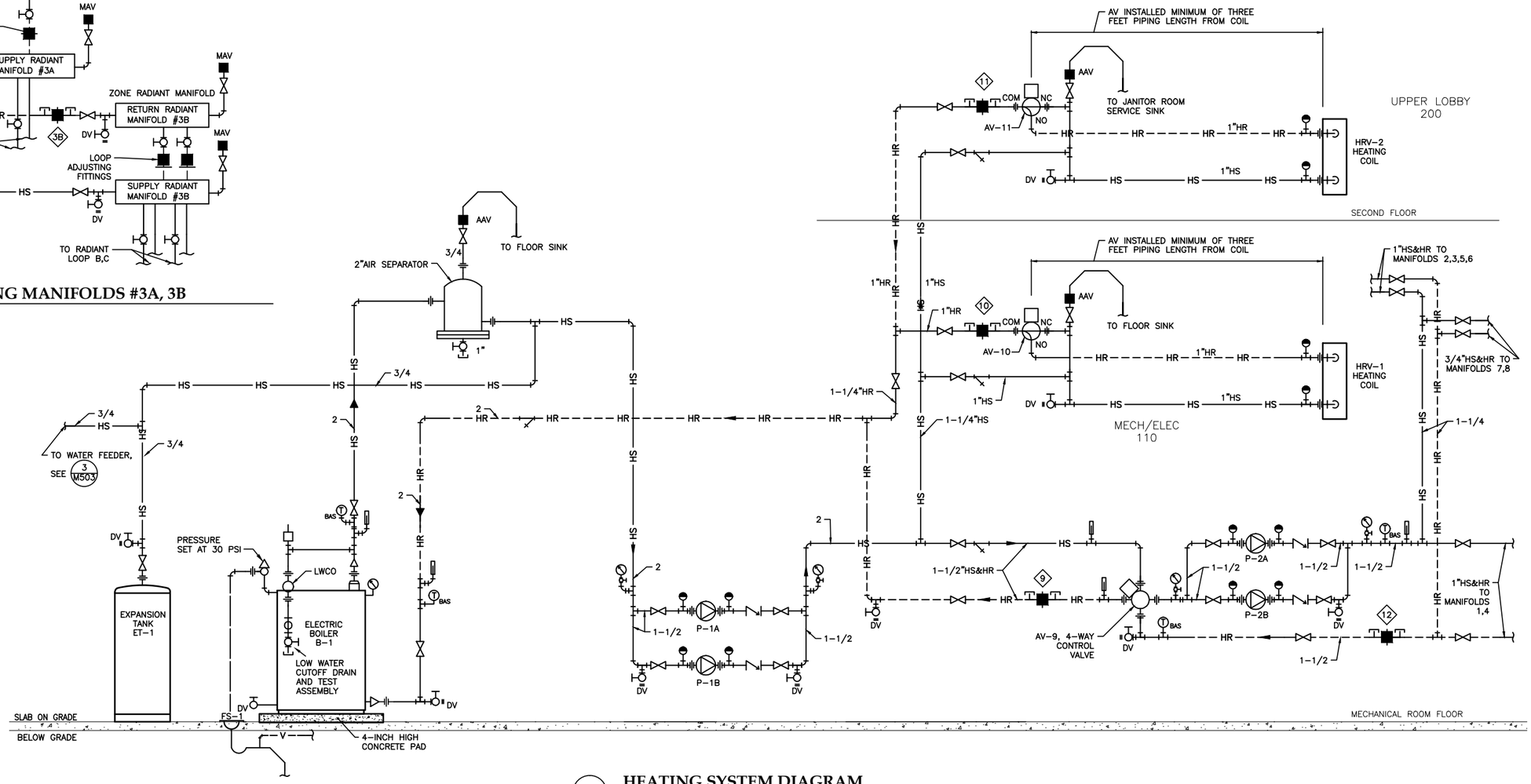

3 HEATING SYSTEM DIAGRAM

NO SCALE

Jensen Yorba Lott Inc.

522 West 10th Street
Juneau, Alaska 99801
phone 907-586-1070
fax 907-586-3959
jensenyorbalott.com

MURRAY & ASSOCIATES P.C.
CONSULTING MECHANICAL ENGINEERS
P O BOX 21081
JUNEAU, AK 99802
MURRAYPC.COM
TEL: 907 780-6151 FAX: 907 780-6182

STATE OF ALASKA — 7491 — DOUGLAS H. MURRAY — ME 7870 — REGISTERED PROFESSIONAL ENGINEER
ISSUE DATE: 10-28-2013

CITY & BOROUGH OF JUNEAU
EAGLECREST LEARNING CENTER
CBJ CONTRACT No. E014-076

REVISIONS

SHEET TITLE
HEATING SYSTEM DIAGRAMS

DATE: **October 28, 2013**
FILE: **13031**

M502

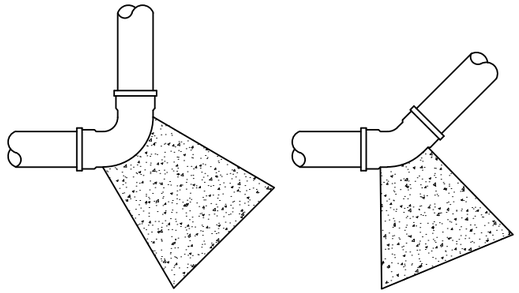

PLAN VIEW – 90° BEND PLAN VIEW – 45° BEND

NOTES:

1. CENTER OF MASS OF THRUST BLOCK MUST LAY OPPOSITE TO AND ALIGNED AGAINST THE DIRECTION OF THRUST.
2. THRUST BLOCKS SHALL BE POURED SO THAT JOINTS OF FITTINGS, INCLUDING ALL NUTS AND FOLLOWERS REMAIN ACCESSIBLE.
3. CONCRETE THRUST BLOCKS SHALL BE POURED AGAINST UNDISTURBED EARTH. UNSTABLE OR UNSUITABLE MATERIALS SHALL BE REMOVED, REPLACED AND/OR COMPACTED AS DETERMINED BY THE COR.
4. MINIMUM OF 0.3 CUBIC YARD OF CONCRETE IS REQUIRED FOR THRUST BLOCK. MINIMUM BEARING AREA OF 2.3 SQUARE FEET IS REQUIRED FOR 90° BEND AND 1.5 SQUARE FEET IS REQUIRED FOR 45° BEND.

1 THRUST BLOCK DETAILS

NO SCALE

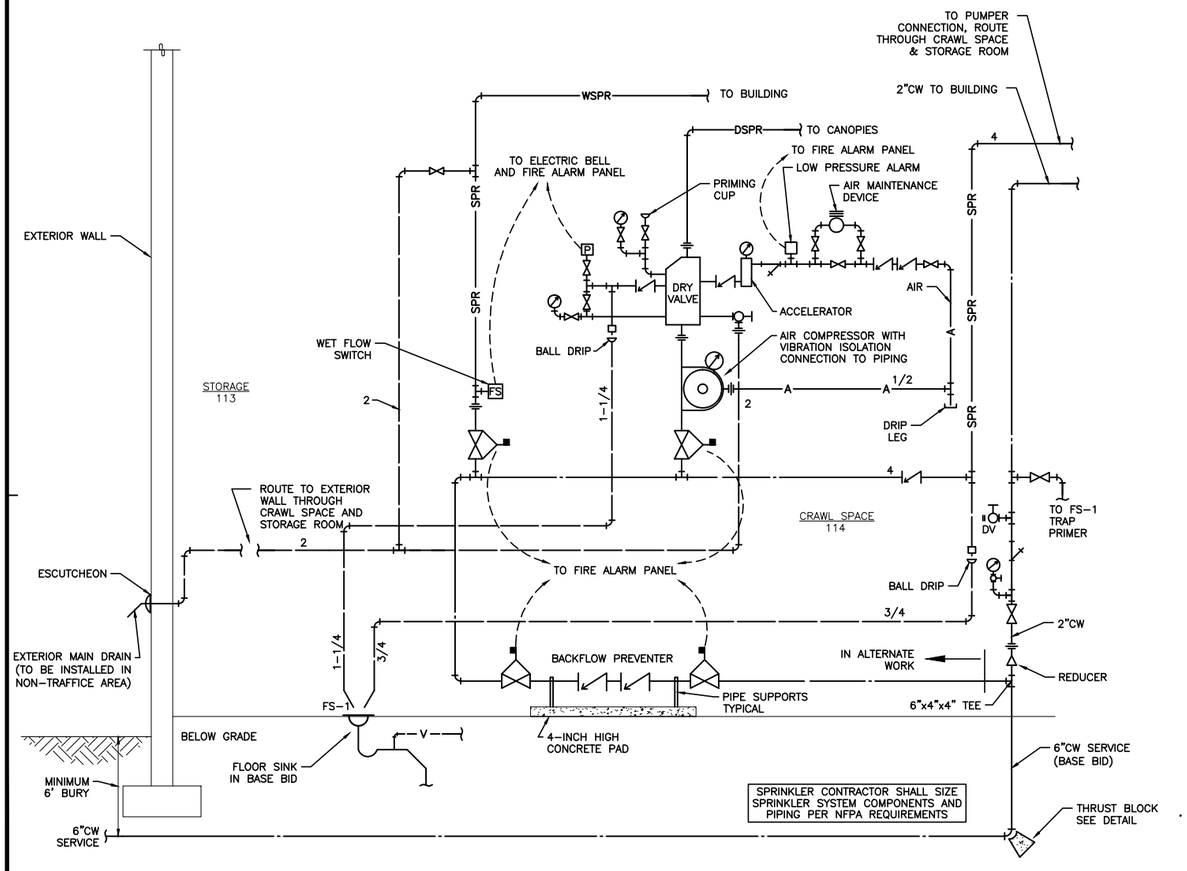

2 WATER AND SPRINKLER HEADER DIAGRAM

NO SCALE

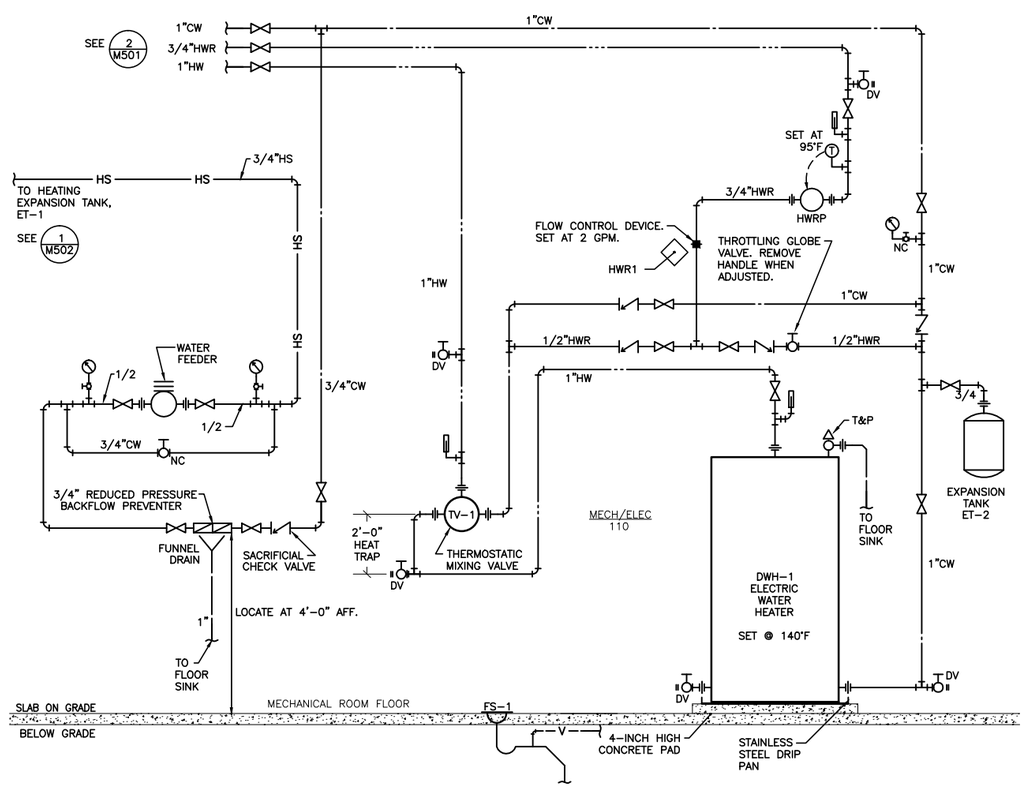

3 DOMESTIC SYSTEM DIAGRAM

NO SCALE

Jensen Yorba Lott Inc.
522 West 10th Street
Juneau, Alaska 99801
phone 907-586-1070
fax 907-586-3959
jensenyorbalott.com

MURRAY & ASSOCIATES P.C.
CONSULTING MECHANICAL ENGINEERS
P O BOX 21081
JUNEAU, AK 99802
MURRAYPC.COM
TEL: 907 780-6151 FAX: 907 780-6182

STATE OF ALASKA — DOUGLAS H. MURRAY — ME 7870 — REGISTERED PROFESSIONAL ENGINEER
ISSUE DATE: 10-28-2013

CITY & BOROUGH OF JUNEAU
EAGLECREST LEARNING CENTER
CBJ CONTRACT No. E014-076

REVISIONS

SHEET TITLE
PLUMBING DIAGRAMS & DETAILS

DATE: October 28, 2013
FILE: 13031

M503

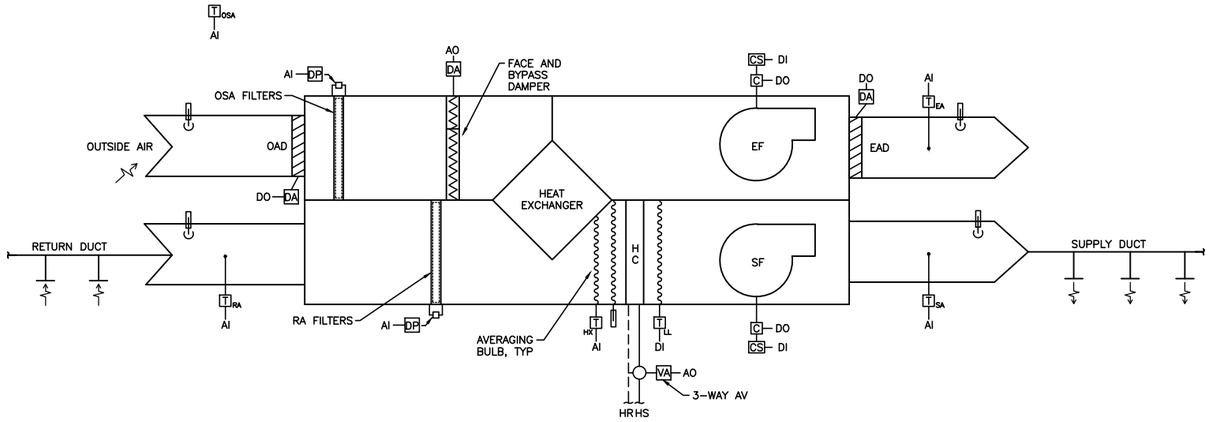

1 CONTROL SCHEMATIC FOR HRV-1 & HRV-2

NO SCALE

CONTROLS LEGEND

C	CONTROLLER	AI	ANALOG INPUT
T	IMMERSION THERMOSTAT OR THERMOSTATIC SENSOR	AO	ANALOG OUTPUT
VA	VALVE ACTUATOR	B-1	BOILER
DA	DAMPER ACTUATOR	COM	COMMON
F	FLOW SWITCH	DWH	DOMESTIC HOT WATER HEATER
DP	DIFFERENTIAL PRESSURE GAGE	DI	DIGITAL INPUT
CS	CURRENT SENSOR	DO	DIGITAL OUTPUT
P	PUMP	EAD	EXHAUST AIR DAMPER
	ROOM THERMOSTAT	EF	EXHAUST FAN
	AIR DIRECTION	HC	HEATING COIL
	THERMOMETER	HR	HEATING RETURN
$	CONTROL SWITCH	HRV	HEAT RECOVERY VENTILATOR
		HS	HEATING SUPPLY
		HWR	HOT WATER RECIRCULATING
		LL	LOW LIMIT CONTROL
		MA	MIXED AIR
		NO	NORMALLY OPEN
		NC	NORMALLY CLOSED
		OAD	OUTSIDE AIR DAMPER
		OSA	OUTSIDE AIR
		P-1	PUMP
		RA	RETURN AIR
		RAD	RETURN AIR DAMPER
		RF	RETURN FAN
		SA	SUPPLY AIR
		SF	SUPPLY FAN

GENERAL NOTES:

1. THE DIAGRAMS AND POINTS SHOWN HERE ARE SCHEMATIC ONLY. REFER TO SEQUENCE OF OPERATIONS AND SPECIFICATIONS FOR COMPLETE CONFIGURATION OF THE SYSTEMS. COORDINATE WITH ALL OTHER DISCIPLINES TO ACHIEVE RESULTS AS SHOWN AND INTENDED IN THE DOCUMENTS. GENERAL NOTES APPLY TO ALL CONTROLS DRAWINGS.
2. SEE FLOOR PLANS AND PIPING DIAGRAMS FOR RESPECTIVE ROOM THERMOSTAT, IMMERSION THERMOSTAT, AND PRESSURE SWITCH LOCATIONS. SEE PLANS FOR OTHER CONTROL EQUIPMENT LOCATIONS. COORDINATE WITH OTHER SPECIFICATION DIVISIONS FOR EQUIPMENT INTERFACE REQUIREMENTS, INCLUDING PIPING TEES AND WELLS, SENSOR LOCATIONS, AND INTERCONNECTIONS.
3. ALL SYSTEMS ABBREVIATIONS, FUNCTIONS, AND EQUIPMENT NAMES SHALL BE LISTED IN ALL SUBMITTAL DATA, O&M DATA, AND AS-BUILTS, AS SHOWN.
4. ALL ROOM THERMOSTATS SHALL HAVE DIGITAL THERMOMETER AND MANUAL ADJUSTMENT ON COVER, AND SHALL BE MONITORED AND CONTROLLED BY THE BAS SYSTEM.
5. INSTALL SENSING DEVICES ADJACENT TO MECHANICAL THERMOMETERS AND GAGES. THERMOMETERS SHOWN ON CONTROL DRAWINGS ARE TO BE PROVIDED AND INSTALLED BY MECHANICAL CONTRACTOR.
6. SEE ELECTRICAL SPECIFICATIONS FOR ADDITIONAL REQUIREMENTS CONCERNING RACEWAYS AND BOXES.

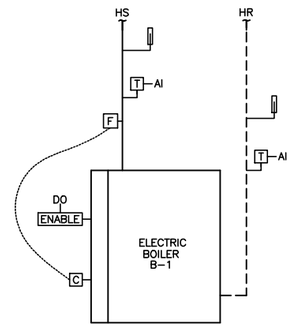

2 ELECTRIC BOILER CONTROL DIAGRAM

NO SCALE

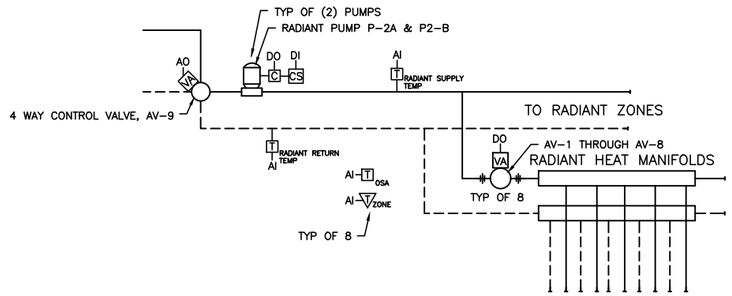

4 CONTROL SCHEMATIC RADIANT HEATING SYSTEM

NO SCALE

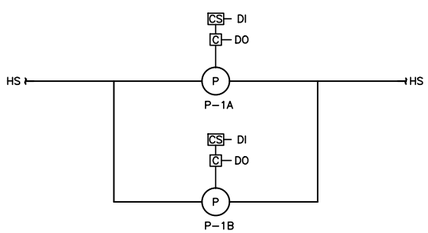

3 PUMP P-1A & P-1B CONTROL SCHEMATIC - TYP OF P-2A & P-2B

NO SCALE

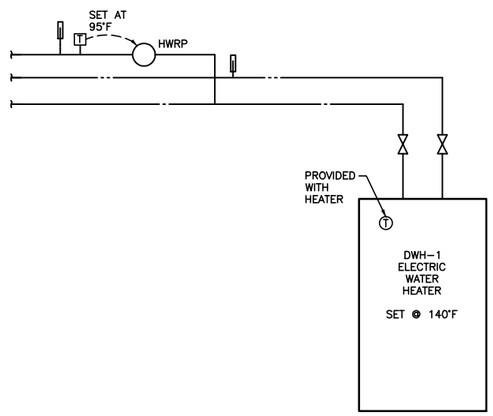

5 CONTROL SCHEMATIC DOMESTIC HW HEATING SYSTEM

NO SCALE

Jensen Yorba Lott Inc.
522 West 10th Street
Juneau, Alaska 99801
phone 907-586-1070
fax 907-586-3959
jensenyorbalott.com

MURRAY & ASSOCIATES P.C.
CONSULTING MECHANICAL ENGINEERS
P O BOX 21081
JUNEAU, AK 99802
MURRAYPC.COM
TEL: 907 780-6151 FAX: 907 780-6182

STATE OF ALASKA
DOUGLAS H. MURRAY
ME 7870
REGISTERED PROFESSIONAL ENGINEER
ISSUE DATE: 10-28-2013

CITY & BOROUGH OF JUNEAU
EAGLECREST LEARNING CENTER
CBJ CONTRACT No. E014-076

REVISIONS

SHEET TITLE
CONTROLS

DATE: October 28, 2013
FILE: 13031

M601

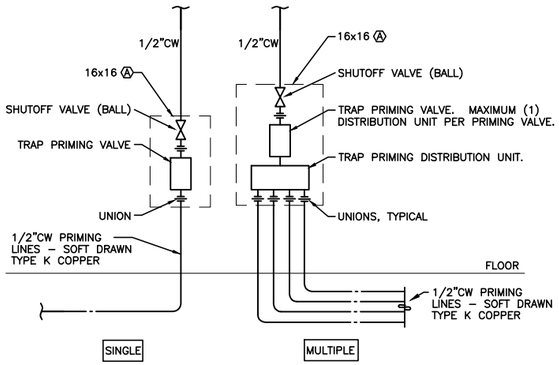

1 TRAP PRIMER DETAIL

NO SCALE

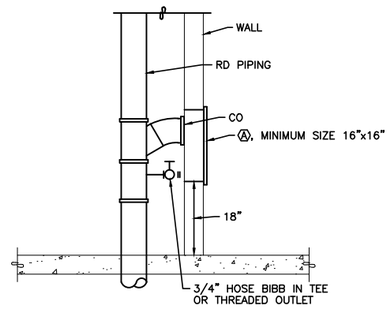

2 ROOF DRAIN CLEANOUT DETAIL

NO SCALE

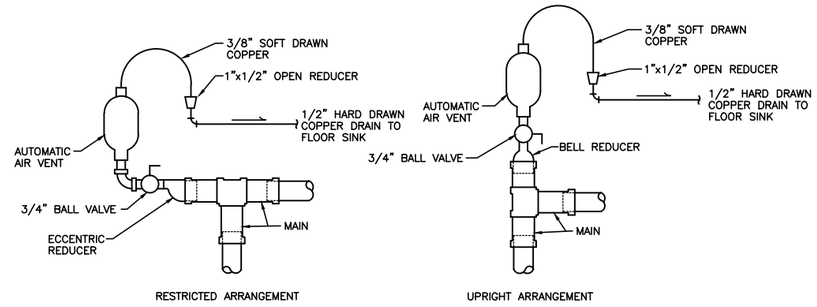

3 AUTOMATIC AIR VENT DETAIL

NO SCALE

4 YARD CLEANOUT DETAIL

NO SCALE

5 SUMP PUMP DETAIL

NO SCALE

Jensen Yorba Lott Inc.
522 West 10th Street
Juneau, Alaska 99801
phone 907-586-1070
fax 907-586-3959
jensenyorbalott.com

MURRAY & ASSOCIATES P.C.
CONSULTING MECHANICAL ENGINEERS
P O BOX 21081
JUNEAU, AK 99802
MURRAYPC.COM
TEL: 907 780-6151 FAX: 907 780-6182

STATE OF ALASKA
DOUGLAS H. MURRAY
ME 7870
REGISTERED PROFESSIONAL ENGINEER
ISSUE DATE: 10-28-2013

CITY & BOROUGH OF JUNEAU
EAGLECREST LEARNING CENTER
CBJ CONTRACT No. E014-076

REVISIONS

SHEET TITLE
PIPING DETAILS

DATE: **October 28, 2013**
FILE: **13031**

M701

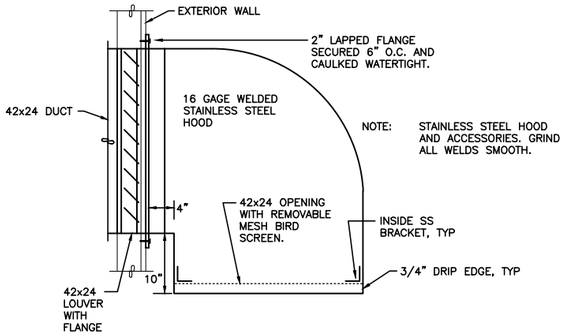

1 WEATHER HOOD DETAIL
NO SCALE

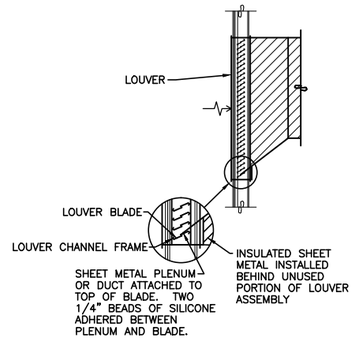

2 LOUVER DETAIL
NO SCALE

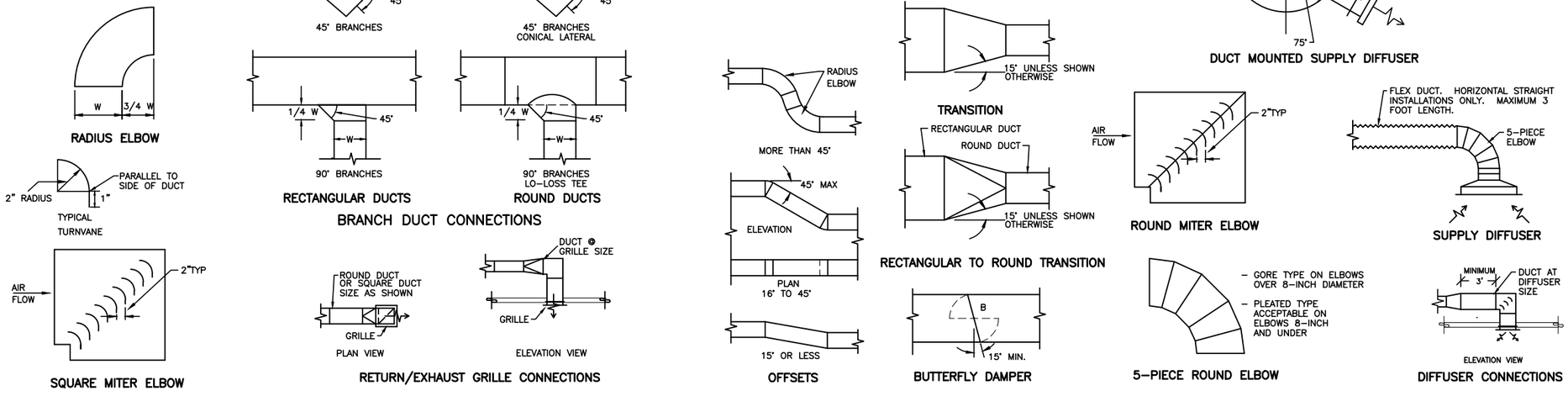

NOTES:
1. ALL DUCTWORK SHALL BE CONSTRUCTED IN ACCORDANCE WITH THESE DETAILS AND THE SPECIFICATIONS.
2. MANUAL DAMPER SHALL BE INSTALLED IN EVERY BRANCH DUCT SERVING A DIFFUSER OR GRILLE AND WHERE TWO DUCTS JOIN WHETHER SHOWN OR NOT.

3 DUCT CONSTRUCTION DETAILS
NO SCALE

Jensen Yorba Lott Inc.
522 West 10th Street
Juneau, Alaska 99801
phone 907-586-1070
fax 907-586-3959
jensenyorbalott.com

MURRAY & ASSOCIATES P.C.
CONSULTING MECHANICAL ENGINEERS
P O BOX 21081
JUNEAU, AK 99802
MURRAYPC.COM
TEL: 907 780-6151 FAX: 907 780-6182

STATE OF ALASKA
DOUGLAS H. MURRAY
ME 7870
REGISTERED PROFESSIONAL ENGINEER
ISSUE DATE: 10-28-2013

CITY & BOROUGH OF JUNEAU
EAGLECREST LEARNING CENTER
CBJ CONTRACT No. E014-076

REVISIONS

SHEET TITLE
DUCTWORK DETAILS

DATE: October 28, 2013
FILE: 13031

M702