EAGLECREST LEARNING CENTER

VOLUME III of III

Contract No. E14-076

File No. 1796

ENGINEERING DEPARTMENT

CITY & BOROUGH OF JUNEAU

EAGLECREST LEARNING CENTER

CBJ CONTRACT No. E014-076

October 28, 2013





STATE OF ALASKA
49TH
JOANNE E. LOTT
10/28/13
ARCHITECT
REGISTERED PROFESSIONAL ENGINEER

Jensen Yorba Lott Inc.

522 West 10th Street
Juneau, Alaska 99801
Phone 907-586-1070
Fax 907-586-3959
jensenyorbalott.com

FILE: 13031

A001

ARCHITECT
JENSEN YORBA LOTT, INC
522 WEST 10TH STREET
JUNEAU, ALASKA 99801
(907) 586-1070
FAX (907) 586-3959

CIVIL ENGINEER
R&M ENGINEERING, INC.
6205 GLACIER HIGHWAY
JUNEAU, ALASKA 99801
(907) 780-6060
FAX (907) 780-4611

STRUCTURAL ENGINEER
R&M ENGINEERING, INC.
6205 GLACIER HIGHWAY
JUNEAU, AK 99801
(907)780-6060
FAX (907)780-4611

MECHANICAL ENGINEER
MURRAY & ASSOCIATES, P.C.
522 \P.O. BOX 21081\EET
JUNEAU, ALASKA 99802
(907) 780-6151
FAX (907) 780-6182

ELECTRICAL ENGINEER
BEGENYI ENGINEERING, LLC
217 2ND STREET, SUITE 208
JUJUNEAU, AK 99801\01
(907)586-5900
FAX (907)586-5901

SHEET INDEX

A001 COVER SHEET
A002 SHEET INDEX, ABBREVIATIONS, & CODE DATA
A003 SYMBOLS, PARTITION & FINISH SCHEDULE
A004 OPENING TYPES & SCHEDULE
A005 WINDOW SCHEDULE

A101 SITE PLAN

A201 FIRST FLOOR PLAN
A202 SECOND FLOOR PLAN
A203 ROOF PLAN

A301 EXTERIOR ELEVATIONS
A302 EXTERIOR ELEVATION
A303 BUILDING SECTIONS
A304 BUILDING SECTIONS
A305 BUILDING SECTIONS
A310 WALL SECTIONS
A311 WALL SECTIONS

A401 ENLARGED FLOOR PLANS

A500 STANDARD FIXTURE HEIGHTS
A501 INTERIOR ELEVATIONS
A502 INTERIOR ELEVATIONS
A503 INTERIOR ELEVATIONS
A504 INTERIOR ELEVATIONS
A505 INTERIOR ELEVATIONS
A506 INTERIOR ELEVATIONS
A507 INTERIOR ELEVATIONS

A601 FIRST FLOOR REFLECTED CEILING PLAN
A602 SECOND FLOOR REFLECTED CEILING PLAN

A701 ENLAGED FLOOR PLAN & BUILDING SECTION @ ELEVATOR
A702 ENLARGED BUILDING SECTION @ STAIRS

A801 DETAILS
A802 DETAILS
A803 DETAILS
A804 DETAILS

A901 INTERIOR DETAILS
A902 INTERIOR DETAILS
A903 INTERIOR DETAILS
A904 INTERIOR DETAIL

C001 GENERAL NOTES, ABBREVIATIONS & SYMBOLS
C002 SOILS TEST HOLE LOCATION MAP & LOGS
C003 SURVEY CONTROL & BUILDING GRID LAYOUT

C100 EXISTING SITE TOPOGRAPHIC SURVEY & DEMO PLAN

C200 OVERALL SITE & UTILITY PLAN
C201 SITE GRADING PLAN
C202 SANITARY SEWER PROFILE
C203 RETAINING WALL DETAILS
C204 RETAINING WALL DETAILS

C300 CROSS SECTIONS
C301 CROSS SECTIONS

C400 CONSTRUCTION DETAILS
C401 CONSTRUCTION DETAILS
C402 CONSTRUCTION DETAILS

S100 NOTES
S101 STANDARD DETAILS

S201 FOUNDATION PLAN
S202 SECOND FLOOR PLAN
S203 ROOF PLAN

S301 FOUNDATION DETAILS
S302 FOUNDATION DETAILS

S401 BRACED FRAME DETAILS
S402 STRUCTURAL STEEL DETAILS
S403 STRUCTURAL STEEL DETAILS
S404 STRUCTURAL STEEL DETAILS

S501 SECTIONS
S502 DECK DETAILS

M406 SECTION C.8

M001 SCHEDULES
M002 SCHEDULES

M100 FOUNDATION PLAN
M101 FIRST FLOOR PLAN - PIPING
M102 SECOND FLOOR PLAN - PIPING

M201 FIRST FLOOR PLAN - DUCTWORK
M202 SECOND FLOOR PLAN - DUCTWORK

M301 FIRST FLOOR RADIANT PLAN
M302 SECOND FLOOR RADIANT PLAN

M401 MECH ROOM ENLARGED PLAN
M402 MECHANICAL ROOM SECTION
M403 SECTION 2.5
M404 SECTION A.6
M405 SECTION 2.6

M501 PLUMBING DIAGRAMS
M502 HEATING SYSTEM DIAGRAMS
M503 PLUMBING DIAGRAMS & DETAILS

M601 CONTROLS

M701 PIPING DETAILS
M702 DUCTWORK DETAILS

E001 LEGEND AND ABBREVIATIONS

E101 SITE PLAN

E201 FIRST FLOOR POWER AND SIGNAL PLAN
E202 SECOND FLOOR POWER AND SIGNAL PLAN

E301 FIRST FLOOR LIGHTING PLAN
E302 SECOND FLOOR LIGHTING PLAN

E401 ENLARGED PLANS

E501 SINGLE LINE DIAGRAMS

E601 SCHEDULES
E602 SCHEDULES

CODE SUMMARY

INTERNATIONAL BUILDING CODE	2009
CONSTRUCTION TYPE	VB
OCCUPANCY TYPE	B & S2
HEIGHT CALCULATIONS	
ALLOWABLE HEIGHT	40'-0" / 2 STORIES
ACTUAL HEIGHT	27'-0" / 2 STORIES
AREA CALCULATIONS	
ALLOWABLE AREA - 1ST FLOOR:	9,000sf
ACTUAL AREA - 1ST FLOOR	3,716sf
ALLOWABLE AREA - 2ND FLOOR:	9,000sf
ACTUAL AREA - 2ND FLOOR	4,928sf

CBJ ZONING
• ZONED RR
• SETBACKS 15' STREET FRONTAGE, 10' OTHER
• PARKING 1/300 SF, 28 STALLS FOR THE LEARNING CENTER. THE EXISTING PARKING COUNT IS ESTIMATED TO BE ABOUT 250. THE EXISTING BUILDING IS 15,755 GSF/300 REQUIRING 52 STALLS. NO ADDITIONAL PARKING IS REQUIRED.

ABBREVIATIONS

AC	ASPHALT CONCRETE
ACM	ASBESTOS CONTAINING MATERIAL
ACP	ACOUSTICAL CEILING PANEL
ADJ	ADJUSTABLE
AFF	ABOVE FINISH FLOOR
AIB	AIR INFILTRATION BARRIER
AL	ALUMINUM
APPROX	APPROXIMATE
ARCH	ARCHITECTURAL
ASB	ASBESTOS
BD	BOARD
BLDG	BUILDING
BLK	BLOCK
BLKG	BLOCKING
BM	BEAM
BOT	BOTTOM
CAB	CABINET
CB	CATCH BASIN
CEM	CEMENT
CG	CORNER GUARD
CI	CAST IRON
CLG	CEILING
COL	COLUMN
CONC	CONCRETE
CONT	CONTINUOUS
CTR	CENTER
CTSK	COUNTERSUNK
DBL	DOUBLE
DEPT	DEPARTMENT
DF	DRINKING FOUNTAIN
DET	DETAIL
DIA	DIAMETER
DIM	DIMENSION
DISP	DISPENSER
DN	DOWN
DR	DOOR
DS	DOWNSPOUT
DWG	DRAWING
DWR	DRAWER
EA	EACH
EF	EXHAUST FAN
EIFS	EXTERIOR INSULATION & FINISH SYSTEM
EJ	EXPANSION JOINT
EL	ELEVATION
ELEC	ELECTRICAL
ELEV	ELEVATOR
EMER	EMERGENCY
ENCL	ENCLOSURE
EPDM	ETHYLENE PROPYLENE DIANE MONOMER
EPS	EXPANDED POLYSTYRENE
EQ	EQUAL
EQP	EQUIPMENT
EX	EXISTING
EXT	EXTERIOR
FA	FIRE ALARM
FB	FIBERGLASS
FD	FLOOR DRAIN
FEC	FIRE EXTINGUISHER CABINET
FF	FINISH FLOOR
FHC	FIRE HOSE CABINET
FIN	FINISH
FLASH	FLASHING
FLR	FLOOR
FOC	FACE OF CONCRETE
FOF	FACE OF FINISH
FOS	FACE OF STUD
FRP	(GLASS) FIBER REINFORCED PLASTIC
FRPF	FIREPROOF
FR	FIRE RETARDANT
FT	FOOT OR FEET
FURR	FURRING
GA	GAUGE
GALV	GALVANIZED
GB	GRAB BAR
GL	GLASS
GWB	GYPSUM WALL BOARD
GYP	GYPSUM
HB	HOSE BIBB
HDWD	HARDWOOD
HM	HOLLOW METAL
HORIZ	HORIZONTAL
HR	HOUR
HT	HEIGHT
HW	HOT WATER
ID	INSIDE DIAMETER
INSUL	INSULATION
INT	INTERIOR
JAN	JANITOR
JT	JOINT
LAB	LABORATORY
LAM	LAMINATE
LAV	LAVATORY
LB	POUND
LT	LIGHT
MIR	MIRROR
MAX	MAXIMUM
MDO	MEDIUM DENSITY OVERLAID
MECH	MECHANICAL
MEMB	MEMBRANE
MFR	MANUFACTURER
MH	MANHOLE
MIN	MINIMUM
MISC	MISCELLANEOUS
MTD	MOUNTED
MTL	METAL
MUL	MULLION
NIC	NOT IN CONTRACT
NO OR #	NUMBER
NOM	NOMINAL
NTS	NOT TO SCALE
OA	OVERALL
OC	ON CENTER
OD	OUTSIDE DIAMETER
OFCI	OWNER FURNISHED CONTRACTOR INSTALLED
OFOI	OWNER FURNISHED OWNER INSTALLED
OFD	OVERFLOW DRAIN
OFF	OFFICE
OPNG	OPENING
OPP	OPPOSITE
OSB	ORIENTED STRAND BOARD
PL	PLATE
PLAM	PLASTIC LAMINATE
PF	PRE-FINISHED
PR	PAIR
PT	PAINT
PTD	PAPER TOWEL DISPENSER
PWD	PLYWOOD
R	RISER
RAD	RADIUS
RD	ROOF DRAIN
REF	REFERENCE
REFR	REFRIGERATOR
REINF	REINFORCED
REQ	REQUIRED
RESIL	RESILIENT
RH	ROBE HOOK
RL	RAIN LEADER
RM	ROOM
RO	ROUGH OPENING
RUB	RUBBER
RWD	REDWOOD
SASU	SELF ADHERING SHEET UNDERLAYMENT
SCD	SEAT COVER DISPENSER
SCHED	SCHEDULE
SD	SOAP DISPENSER
SF	SQUARE FOOT
SHR	SHOWER
SHTH	SHEATHING
SIM	SIMILAR
SND	SANITARY NAPKIN DISPENSER
SNR	SANITARY NAPKIN RECEPTACLE
SPEC	SPECIFICATIONS
SQ	SQUARE
STA	STATION
STC	SOUND TRANSMISSION CLASS
STD	STANDARD
STL	STEEL
STOR	STORAGE
STRUCT	STRUCTURAL
SS	STAINLESS STEEL
SUSP	SUSPENDED
SY	SQUARE YARD
TC	TOP OF CURB
TEMP	TEMPORARY
T&G	TONGUE & GROOVE
TOC	TOP OF CONCRETE
TOD	TOP OF DECK
TPD	TOILET PAPER DISPENSER
TRD	TREAD
TRTD	PRESSURE TREATED
TOW	TOP OF WALL
TYP	TYPICAL
UL	UNDERWRITERS LABORATORIES
UNF	UNFINISHED
UON	UNLESS OTHERWISE NOTED
UR	URINAL
VERT	VERTICAL
VEST	VESTIBULE
VR	VAPOR RETARDER
VTR	VENT THROUGH ROOF
WD	WOOD
WOM	WALK OFF MAT

Jensen Yorba Lott Inc.
522 West 10th Street
Juneau, Alaska 99801
Phone 907-586-1070
Fax 907-586-3959
jensenyorbalott.com

STATE OF ALASKA 49TH JOANNE LOTT 10/28/13 ARCHITECT PROFESSIONAL ASSOCIATE

CITY & BOROUGH OF JUNEAU
EAGLECREST LEARNING CENTER
CBJ CONTRACT No. E014-076

REVISIONS

SHEET TITLE
SHEET INDEX, ABBREVIATIONS, & CODE DATA

DATE: October 28, 2013
FILE: 13031

A002

10/28/2013 4:35:45 PM C:\Users\adeguzman\Documents\My Revit Projects\13031 - Eaglecrest Learning Center CD_adeguzman.rvt

PARTITION SCHEDULE: INTERIOR PARTITIONS

GENERAL NOTES:
1. PARTITIONS ARE TYPE "A" UON

2. PARTITIONS EXTEND FROM FLOOR TO UNDERSIDE OF FLOOR/ROOF DECK

3. PROVIDE MOISTURE RESISTANT GWB IN TOILET ROOMS

4. SEE FINISH SCHEDULE FOR ADDITIONAL FINISHES NOT SHOWN

5. SEAL ALL PENETRATIONS & PERIMETER OF WALL @ SOUND RATED PARTITIONS

6. PROVIDE TREATED BOTTOM PLATE (TYP)

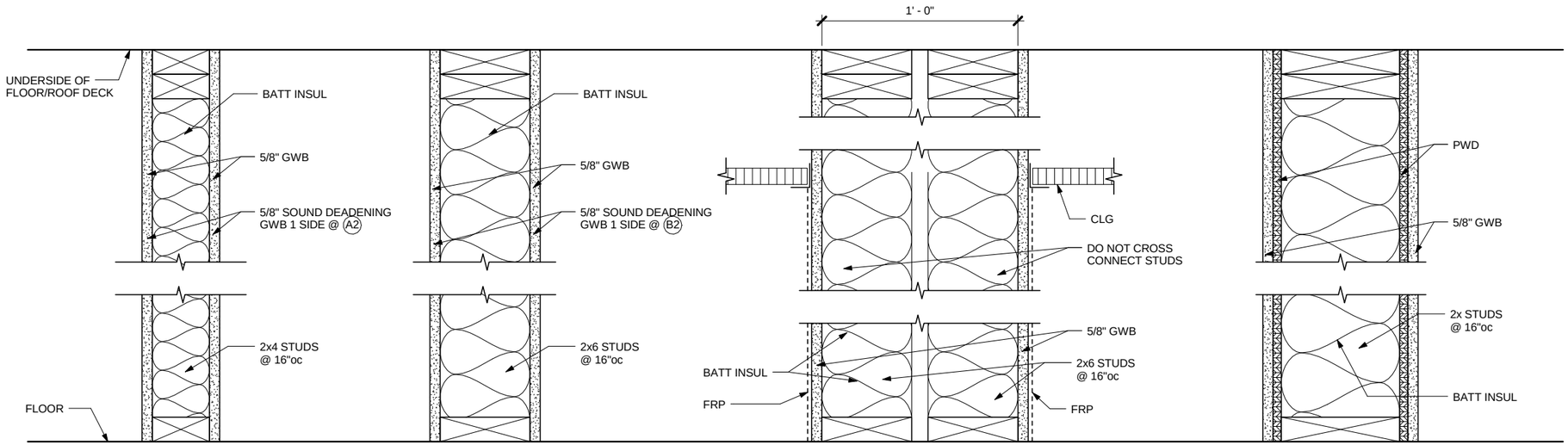

A TYPICAL PARTITION
1 HOUR GA FILE No. 3644 @ A1
2x4 SOUND RATED (STC 50) @ A2
-GA FILE WP 3246 OR 3251

B 2x6 PARTITION
1 HOUR GA FILE No. 3660 @ B1
SOUND RATED (STC 50) @ B2
-GA FILE WP 3246 OR 3251

C PLUMBING WALL

D 2x PARTITION w/ PWD
-SEE STRUCT FOR STUD SIZE, SPACING, & PWD NAILING

SYMBOLS

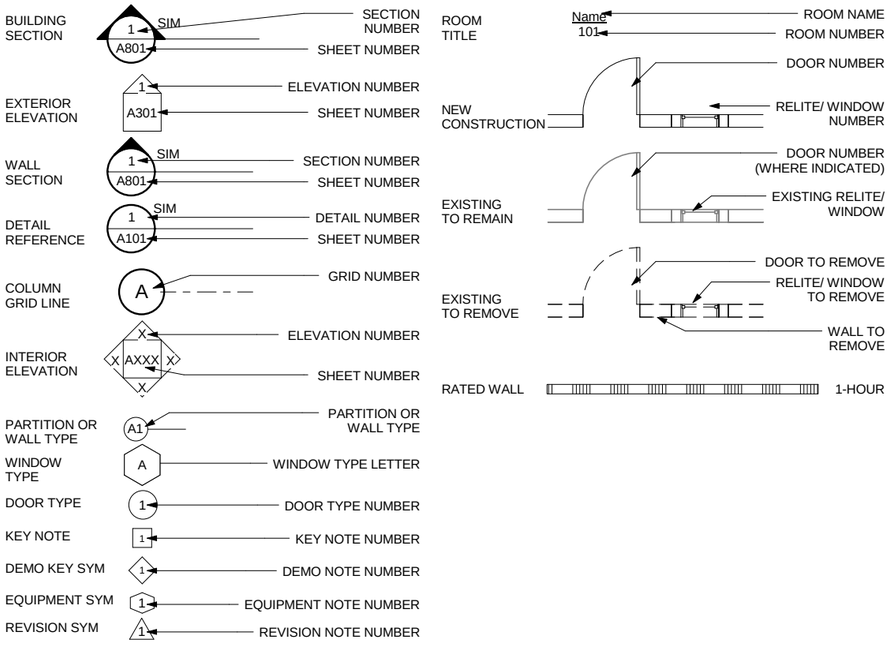

FINISH SCHEDULE

Finish Schedule										
			Base		Walls				Ceiling	
Room No.	Room Name	Floor Finish	Finish	Ht	North	East	South	West	Finish	Comments
100	LOWER LOBBY	WOM	RUB	4"	GWB/PT	GWB/PT	GWB/PT	GWB/PT	NONE	NOTE 1
101	BENCH AREA	CPT	RUB	4"	GWB/PT	GWB/PT	GWB/PT	GWB/PT	NONE	NOTE 1, NOTE 3 - SOUTH
102	SKI SCHOOL QUE AREA	CPT	RUB	4"	GWB/PT	GWB/PT	GWB/PT	GWB/PT	NONE	NOTE 1, NOTE 3 - SOUTH
103	HALL	CPT	RUB	4"	GWB/PT	GWB/PT	GWB/PT	GWB/PT	NONE	NOTE 1, NOTE 3 - EAST
104	CASH/ OFFICE	CPT	RUB	4"	GWB/PT	GWB/PT	GWB/PT	GWB/PT	ACP	
105	ADMIN OFFICE	CPT	RUB	4"	GWB/PT	GWB/PT	GWB/PT	GWB/PT	ACP	
106	SKI SCHOOL	CPT	RUB	4"	GWB/PT	GWB/PT	GWB/PT	GWB/PT	ACP	NOTE 3 - SOUTH
107	TICKETS	CPT	RUB	4"	GWB/PT	GWB/PT	GWB/PT	GWB/PT	NONE	NOTE 3 - WEST
108	RETAIL	CPT	RUB	4"	GWB/PT	GWB/PT	GWB/PT	GWB/PT	NONE	NOTE 3 - NORTH
109	REPAIR	CONC/SLR	RUB	4"	GWB/PT	GWB/PT	GWB/PT	GWB/PT	NONE	
110	MECH/ ELEC	CONC/SLR	NONE	-	GWB/PT	GWB/PT	GWB/PT	GWB/PT	NONE	
111	TOILET	SV	RUB	4"	FRP	FRP	FRP	FRP	GWB/PT	FRP TO 8'-0"
112	STORAGE	CONC/SLR	RUB	4"	GWB/PT	GWB/PT	GWB/PT	GWB/PT	GWB/PT	
113	STORAGE	CONC/SLR	NONE	-	GWB	GWB	GWB	GWB	NONE	NOTE 2
114	CRAWL SPACE	CONC/SLR	NONE	-	GWB	GWB	GWB	GWB	NONE	NOTE 2
200	UPPER LOBBY	CPT	RUB	4"	GWB/PT	GWB/PT	GWB/PT	GWB/PT	NONE	NOTE 1, NOTE 3 - EAST
201	RENTAL	CPT	RUB	4"	GWB/PT	GWB/PT	GWB/PT	GWB/PT	NONE	NOTE 3 - NORTH & WEST
202	MEN'S	SV	RUB	4"	FRP	FRP	FRP	FRP	GWB/PT	FRP TO 8'-0"
202A	VEST	CPT	RUB	4"	GWB/PT	GWB/PT	GWB/PT	GWB/PT	GWB/PT	
203	WOMEN'S	SV	RUB	4"	FRP	FRP	FRP	FRP	GWB/PT	FRP TO 8'-0"
203A	VEST	CPT	RUB	4"	GWB/PT	GWB/PT	GWB/PT	GWB/PT	GWB/PT	
204	JAN	CV	RUB	4"	FRP	FRP	FRP	FRP	NONE	FRP TO 8'-0"
205	HALL	CPT	RUB	4"	GWB/PT	GWB/PT	GWB/PT	GWB/PT	NONE	NOTE 1, NOTE 3 - SOUTH
206	HALL	CPT	RUB	4"	GWB/PT	GWB/PT	GWB/PT	GWB/PT	NONE	NOTE 1, NOTE 3 - EAST
207	OFFICES	CPT	RUB	4"	GWB/PT	GWB/PT	GWB/PT	GWB/PT	NONE	
208	DIRECTOR'S OFFICE	CPT	RUB	4"	GWB/PT	GWB/PT	GWB/PT	GWB/PT	NONE	
209	INSTRUCTORS	CPT	RUB	4"	GWB/PT	GWB/PT	GWB/PT	GWB/PT	NONE	
210	COMM	CONC/SLR	RUB	4"	GWB/PT	GWB/PT	GWB/PT	GWB/PT	NONE	
211	CLASSROOM	CPT	RUB	4"	GWB/PT	GWB/PT	GWB/PT	GWB/PT	NONE	
212	CHILD PROGRAM	CPT	RUB	4"	GWB/PT	GWB/PT	GWB/PT	GWB/PT	NONE	NOTE 3 - SOUTH
213	ADAPTIVE	CPT	RUB	4"	GWB/PT	GWB/PT	GWB/PT	GWB/PT	NONE	NOTE 3 - SOUTH
214	STAIR	CPT	RUB	-	GWB/PT	GWB/PT	GWB/PT	GWB/PT	NONE	CARPET ON RISER &TREAD & RUBBER STRINGER SKIRT
215	ELEVATOR	CPT	-	-	-	-	-	-	-	PLASTIC LAMINATE WALL FINISH

ABBREVIATIONS:
ACP - ACOUSTICAL CEILING PANEL
CPT - CARPET
FRP - FIBER-REINFORCED PLASTIC
GWB - GYPSUM WALL BOARD
PT - PAINT
SLR - SEALER
WOM - WALK OFF MAT
SV - SHEET VINYL

NOTES:
1. 1x8 ROUGHSAWN CEDAR WAINSCOT - BID ALTERNATE
2. ALL FINISHES ARE PART OF BID ALTERNATE (UON)
3. PAINT ACCENT COLOR ON WALL INDICATED

Jensen Yorba Lott Inc.
522 West 10th Street
Juneau, Alaska 99801
Phone 907-586-1070
Fax 907-586-3959
jensenyorbalott.com

STATE OF ALASKA 49TH JOANNE LOTT 10/28/13 AK ARCH. REGISTERED PROFESSIONAL ARCHITECT

CITY & BOROUGH OF JUNEAU
EAGLECREST LEARNING CENTER
CBJ CONTRACT No. E014-076

REVISIONS

SHEET TITLE
SYMBOLS, PARTITION & FINISH SCHEDULE

DATE: October 28, 2013
FILE: 13031

A003

C:\Users\adeguzman\Documents\My Revit Projects\13031 - Eaglecrest Learning Center CD_adeguzman.rvt
10/28/2013 4:35:46 PM

OPENING TYPES

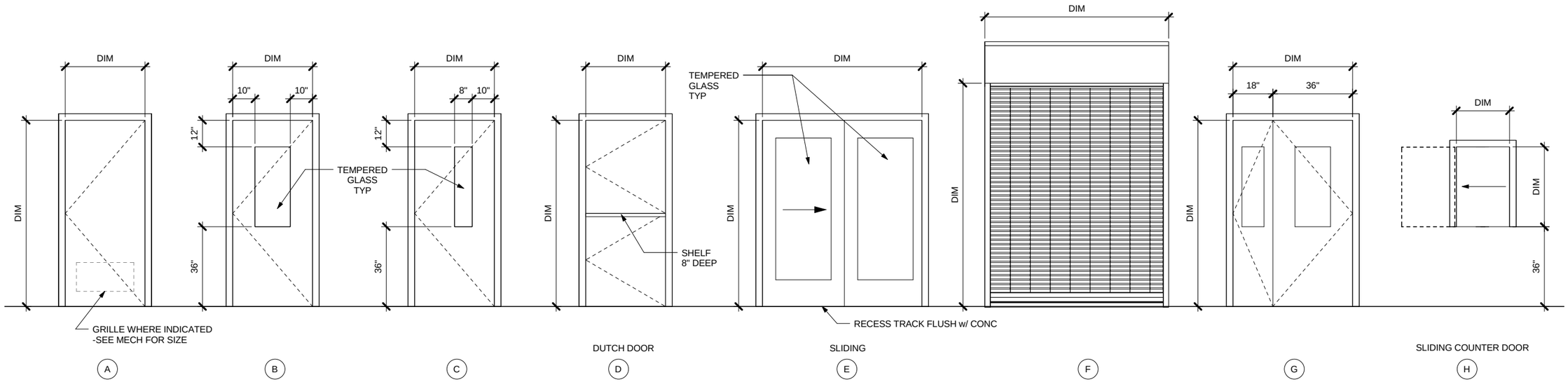

OPENING SCHEDULE

Opening Schedule																	
Opening					Door	Door	Frame	Frame		Signage	Signage		Details	Details	Details		
Number	Room	Type	Width	Height	Door Material	Finish	Material	Finish	Glass	Type	Text	Rating	DoorJamb Detail	Door Head Detail	Door Sill Detail	HW	Remarks
100	LOWER LOBBY	J	6' - 0"	7' - 0"	FB	PT	FB	PT	G1	-	-		4/A803	4/A803	4/A803	01	
103	HALL	C	3' - 0"	7' - 0"	FB	PT	FB	PT	G2	-	-		4/A803	4/A803	4/A803	02	
104	CASH/OFFICE	C	3' - 0"	7' - 0"	WD	PT	HM	PT	G2	A1	XXX		1/A902	1/A902	-	05	
105	ADMIN OFFICE	C	3' - 0"	7' - 0"	WD	PT	HM	PT	G2	A1	XXX		1/A902	1/A902	-	05	
106A	SKI SCHOOL	C	3' - 0"	7' - 0"	WD	PT	HM	PT	G2	A	XXX TICKET OFFICE		1/A902	1/A902	-	05	
106B	SKI SCHOOL	M	2' - 6"	3' - 0"	WD	PF	-	-		-	-		6/A902	6/A902	6/A902	08	
106C	SKI SCHOOL	M	2' - 6"	3' - 0"	WD	PF	-	-		-	-		6/A902	6/A902	6/A902	08	
106D	SKI SCHOOL	M	2' - 6"	3' - 0"	WD	PF	-	-		-	-		6/A902	6/A902	6/A902	08	
107	TICKETS	E	6' - 0"	7' - 0"	WD	PF	WD	PF		B	XXX		1/A902	1/A902	-	09	
108A	RETAIL	F	6' - 0"	8' - 0"	AL	PF	AL	PF	--	-	-		4/A902 SIM	4/A902	-	09	
108B	RETAIL	C	3' - 0"	7' - 0"	WD	PF	HM	PT	G2	A	XXX RETAIL		2/A902	2/A902	-	05	
109A	REPAIR	D	3' - 0"	7' - 0"	WD	PF	HM	PT	G2	A	XXX REPAIR		1/A902	1/A902	-	10	UNDERCUT DOOR 1"
110A	MECH/ELEC	K	6' - 0"	7' - 0"	FB	PT	FB	PT	--	-	-		4/A803	4/A803	4/A803	03	
110B	MECH/ELEC	A	3' - 0"	7' - 0"	WD	PF	HM	PT	--	B	XXX		1/A902	1/A902	-	05	
110C	MECH/ELEC	K	4' - 0"	7' - 0"	WD	PT	HM	PT	--	-	-		1/A902	1/A902	-	13	
111	TOILET	A	3' - 0"	7' - 0"	WD	PF	HM	PT	--	C (SIM)	RESTROOM		1/A902	1/A902	-	07	UNDERCUT DOOR 1"
112	STORAGE	A	3' - 0"	7' - 0"	WD	PF	HM	PT	--	B	XXX	60 MIN	1/A902	1/A902	-	04	
113	STORAGE	K	6' - 0"	7' - 0"	WD	PF	HM	PT	--	B	XXX		1/A902	1/A902	-	06	
114	CRAWL SPACE	A	3' - 0"	7' - 0"	WD	PF	HM	PT	--	B	XXX		1/A902	1/A902	-	04	
200A	UPPER LOBBY	J	6' - 0"	7' - 0"	FB	PT	FB	PT	G1	-	-		4/A803	4/A803	4/A803	01	
201A	RENTAL	J	6' - 0"	7' - 0"	FB	PT	FB	PT	G1	-	-		4/A803	4/A803	4/A803	01	
201B	RENTAL	B	4' - 0"	7' - 0"	WD	PF	HM	PT	G2	A	XXX RENTAL		1/A902	1/A902	-	12	
201C	RENTAL	G	4' - 6"	7' - 0"	WD	PF	HM	PT	G2	A	XXX RENTAL		1/A902	1/A902	-	13	
202	MEN'S	A	3' - 0"	7' - 0"	WD	PF	HM	PT	--	C	XXX MENS		1/A902	1/A902	-	11	GRILLE (18"x12")
203	WOMEN'S	A	3' - 0"	7' - 0"	WD	PF	HM	PT	--	C	XXX WOMENS		1/A902	1/A902	-	11	GRILLE (18"x12")
204	JANITOR	A	3' - 0"	7' - 0"	WD	PF	HM	PT	--	B	XXX		1/A902	1/A902	-	05	
207	OFFICES	C	3' - 0"	7' - 0"	WD	PT	HM	PT	G2	A1	XXX OFFICE		1/A902	1/A902	-	05	
208	DIRECTOR'S OFFICE	C	3' - 0"	7' - 0"	WD	PT	HM	PT	G2	A1	XXX OFFICE		1/A902	1/A902	-	05	
209A	INSTRUCTORS	C	3' - 0"	7' - 0"	WD	PT	HM	PT	G2	A	XXX INSTRUCTORS		1/A902	1/A902	-	05	
209B	INSTRUCTORS	C	3' - 0"	7' - 0"	FB	PT	FB	PT	G1	-	-		4/A803	4/A803	4/A803	14	ALTERNATE
210	COMMUNICATIONS	A	3' - 0"	7' - 0"	WD	PT	HM	PT	--	B	XXX		1/A902	1/A902	-	05	GRILLE (18"x12")
211A	CLASSROOM	C	3' - 0"	7' - 0"	WD	PT	HM	PT	G2	A1	XXX		1/A902	1/A902	-	05	
211B	CLASSROOM	J	6' - 0"	7' - 0"	WD	PT	HM	PT	G2	-	-		1/A902	1/A902	-	13	UNDERCUT DOOR 1"
211C	CLASSROOM	C	3' - 0"	7' - 0"	WD	PT	HM	PT	G2	A1	CLASSROOM		1/A902	1/A902	-	05	UNDERCUT DOOR 1"
212A	CHILD PROGRAM	C	3' - 0"	7' - 0"	WD	PT	HM	PT	G2	A1	XXX		1/A902	1/A902	-	05	UNDERCUT DOOR 1"
212B	CHILD PROGRAM	C	3' - 0"	7' - 0"	FB	PT	FB	PT	G1	-	-		4/A803	4/A803	4/A803	14	
213A	ADAPTIVE	A	3' - 0"	7' - 0"	WD	PF	HM	PT	G2	A1	XXX		1/A902	1/A902	-	05	UNDERCUT DOOR 1"
213B	ADAPTIVE	C	3' - 0"	7' - 0"	FB	PT	FB	PT	G1	-	-		4/A803	4/A803	4/A803	14	

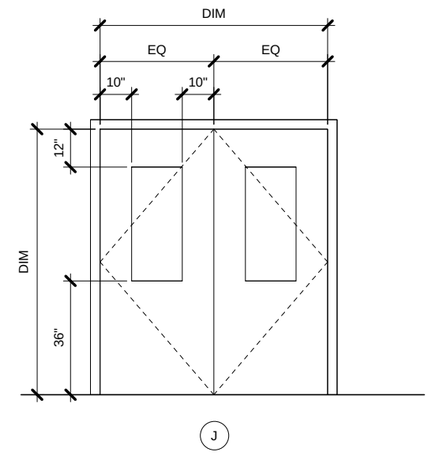

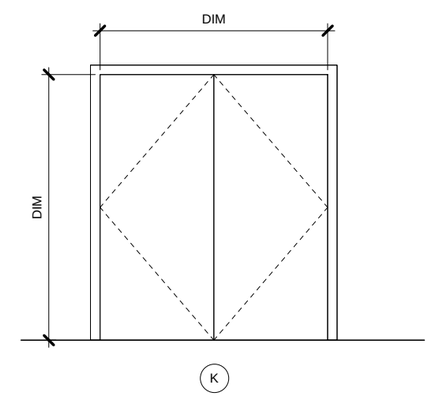

Jensen Yorba Lott Inc.
522 West 10th Street
Juneau, Alaska 99801
Phone 907-586-1070
Fax 907-586-3959
jensenyorbalott.com

STATE OF ALASKA 49TH JOANNE LOTT 10/28/13 AR A 705 REGISTERED PROFESSIONAL ARCHITECT

CITY & BOROUGH OF JUNEAU
EAGLECREST LEARNING CENTER
CBJ CONTRACT No. E014-076

REVISIONS

SHEET TITLE
OPENING TYPES & SCHEDULE

DATE: October 28, 2013
FILE: 13031

A004

C:\Users\adeguzman\Documents\My Revit Projects\13031 - Eaglecrest Learning Center CD_adeguzman.rvt
10/28/2013 4:35:51 PM

WINDOW SCHEDULE

NOTE: SEE 1/A005 FOR TYP WINDOW INSTALLATION

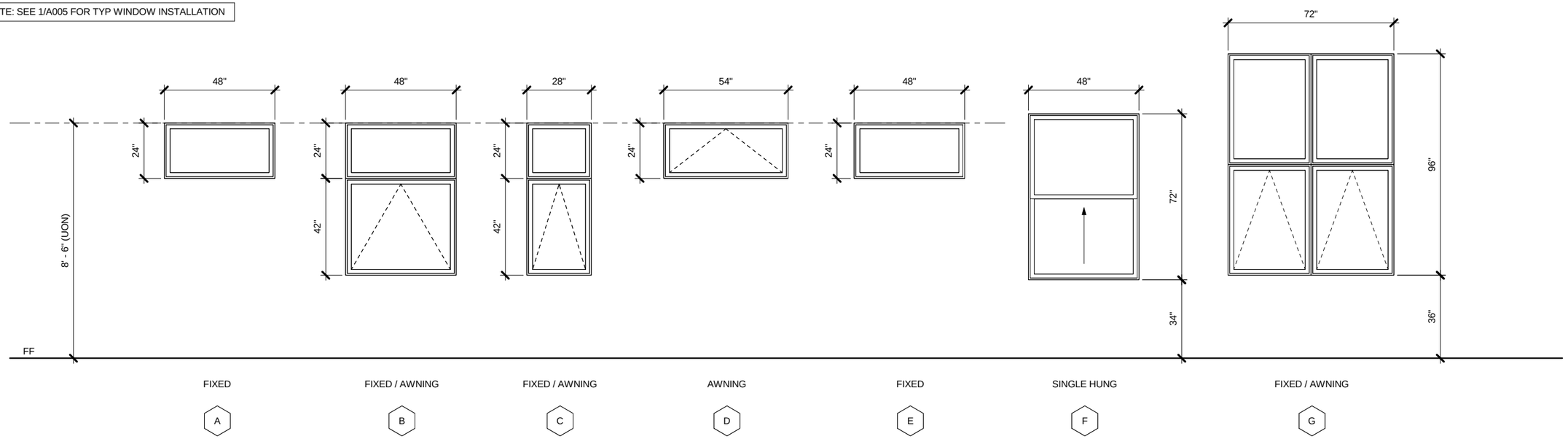

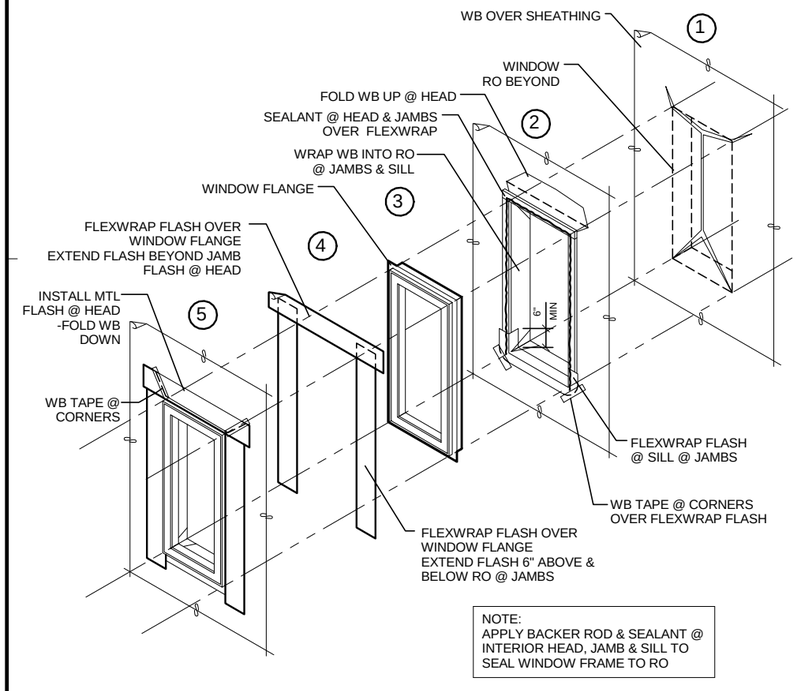

NOTE:
APPLY BACKER ROD & SEALANT @
INTERIOR HEAD, JAMB & SILL TO
SEAL WINDOW FRAME TO RO

1 TYPICAL WINDOW INSTALLATION

SCALE: 0 1' 2' 4'

Jensen Yorba Lott Inc.

522 West 10th Street
Juneau, Alaska 99801
Phone 907-586-1070
Fax 907-586-3959
jensenyorbalott.com

STATE OF ALASKA 49TH JOANNE LOTT 10/28/13 No. A 7806 REGISTERED PROFESSIONAL ARCHITECT

CITY & BOROUGH OF JUNEAU
EAGLECREST LEARNING CENTER
CBJ CONTRACT No. E014-076

REVISIONS

SHEET TITLE
WINDOW SCHEDULE

DATE: October 28, 2013
FILE: 13031

A005

C:\Users\adeguzman\Documents\My Revit Projects\13031 - Eaglecrest Learning Center CD_adeguzman.rvt
11/13/2013 2:18:06 PM

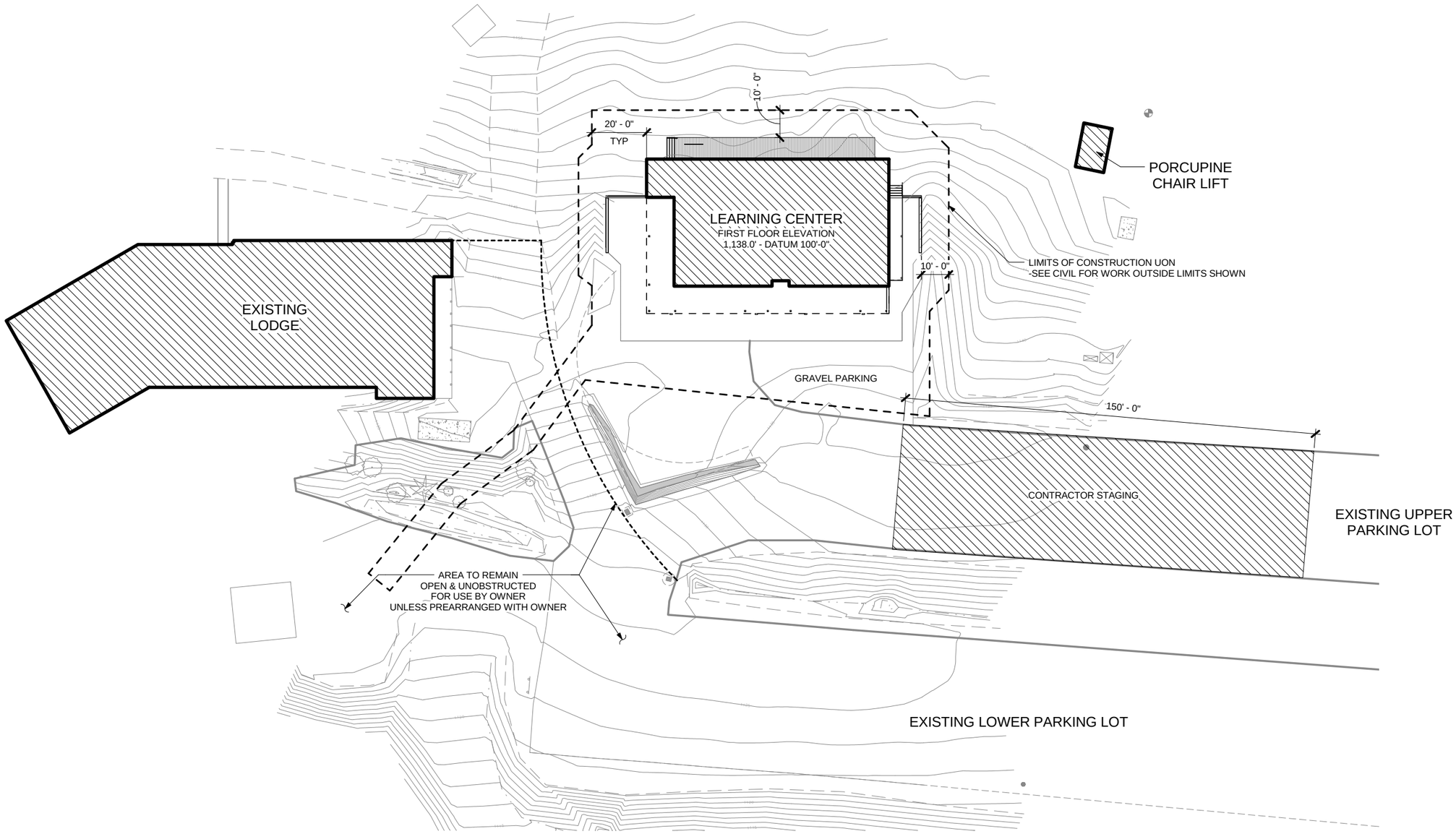

1 SITE PLAN

SCALE: 0 10' 20' 40'

Jensen Yorba Lott Inc.
522 West 10th Street
Juneau, Alaska 99801
Phone 907-586-1070
Fax 907-586-3959
jensenyorbalott.com

STATE OF ALASKA 49TH
JOANNE LOTT
10/28/13
AK A705
REGISTERED PROFESSIONAL ARCHITECT

CITY & BOROUGH OF JUNEAU
EAGLECREST LEARNING CENTER
CBJ CONTRACT No. E014-076

REVISIONS

SHEET TITLE
SITE PLAN

DATE: October 28, 2013
FILE: 13031

A101

10/28/2013 4:36:03 PM C:\Users\adeguzman\Documents\My Revit Projects\13031 - Eaglecrest Learning Center CD_adeguzman.rvt

KEY NOTES

1. BASE BID: LEAVE UNFINISHED WITHOUT CONC SLAB
   BID ALTERNATE 1: FINISHED SPACE
2. BASE BID: LEAVE UNFINISHED WITHOUT CONC SLAB
   BID ALTERNATE 2: FINISHED SPACE
3a. BASE BID: OMIT COLUMNS & FOOTINGS FOR DECK ABOVE.
   BID ALTERNATE 3: PROVIDE COLUMNS & FOOTINGS FOR DECK ABOVE
3b. BASE BID: OMIT STAIR, DECK RAILINGS & DOOR 209B
   -CONSTRUCT TYP EXT WALL @ 209B
   BID ALTERNATE 3: PROVIDE STAIR, DECK, RAILING & DOOR 209B
4. CONCRETE HOUSKEEPING PAD
   -SEE MECH
5. TERMINATE SIDING AT GRIDLINE w/CONT TREATED 2x4 ON FACE OF CONCRETE
   -FASTEN SIDING & END FLASHING TO 2x4 & CONCEAL ALL WOOD

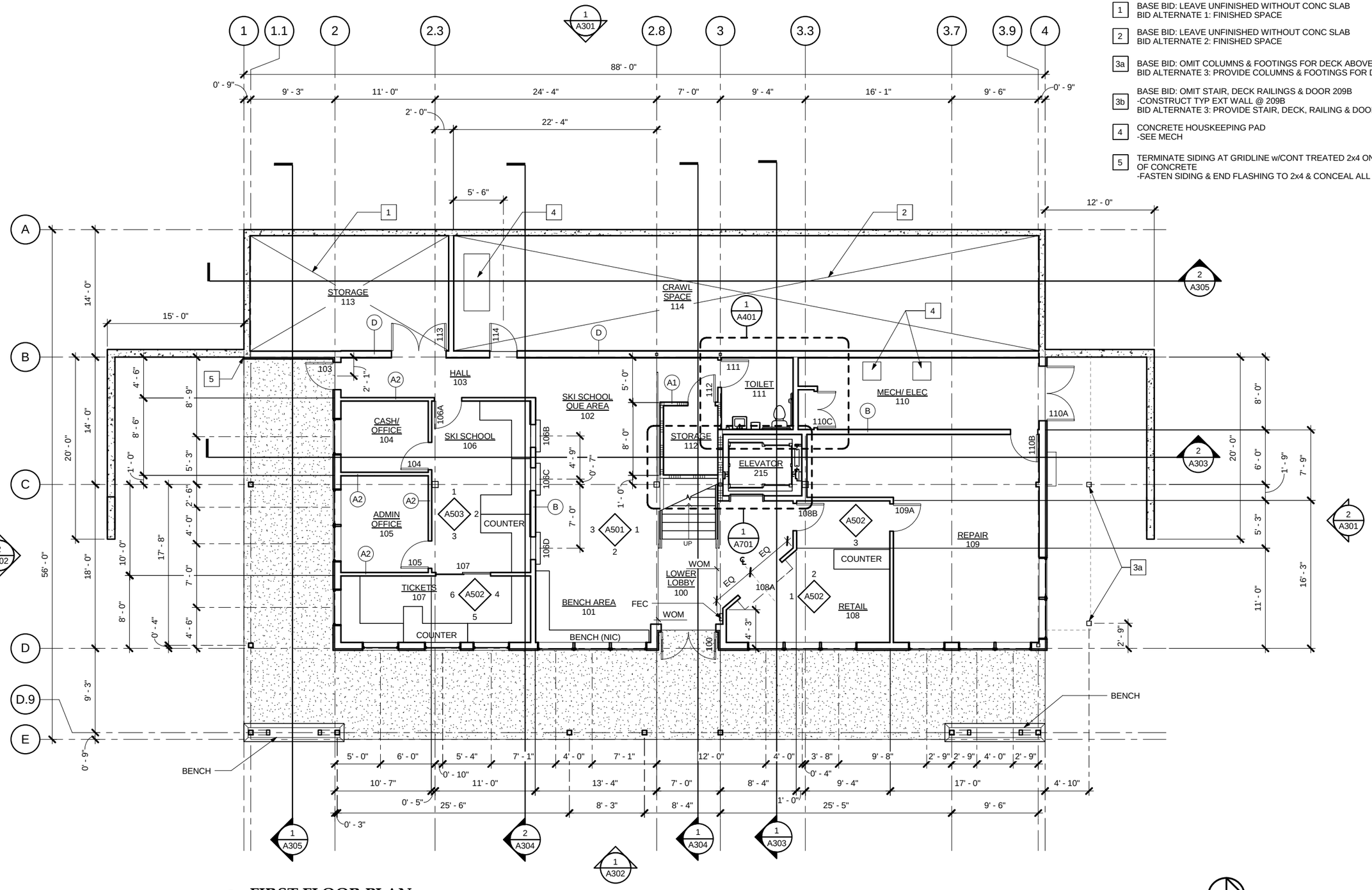

1 FIRST FLOOR PLAN

2,845sf + 871sf (CRAWL) + 1,212sf (OVERHANG)

SCALE: 0 2' 4' 8' 16'

Jensen Yorba Lott Inc.
522 West 10th Street
Juneau, Alaska 99801
Phone 907-586-1070
Fax 907-586-3959
jensenyorbalott.com

STATE OF ALASKA 49TH JOANNE LOTT 10/28/13 AR A705 REGISTERED PROFESSIONAL ARCHITECT

CITY & BOROUGH OF JUNEAU
EAGLECREST LEARNING CENTER
CBJ CONTRACT No. E014-076

REVISIONS

SHEET TITLE
FIRST FLOOR PLAN

DATE: October 28, 2013
FILE: 13031

A201

10/28/2013 4:36:05 PM C:\Users\adeguzman\Documents\My Revit Projects\13031 - Eaglecrest Learning Center CD_adeguzman.rvt

KEY NOTES

1. BASE BID: LEAVE UNFINISHED WITHOUT CONC SLAB
   BID ALTERNATE 1: FINISHED SPACE
2. BASE BID: LEAVE UNFINISHED WITHOUT CONC SLAB
   BID ALTERNATE 2: FINISHED SPACE
3a. BASE BID: OMIT COLUMNS & FOOTINGS FOR DECK ABOVE.
   BID ALTERNATE 3: PROVIDE COLUMNS & FOOTINGS FOR DECK ABOVE
3b. BASE BID: OMIT STAIR, DECK RAILINGS & DOOR 209B
   -CONSTRUCT TYP EXT WALL @ 209B
   BID ALTERNATE 3: PROVIDE STAIR, DECK, RAILING & DOOR 209B

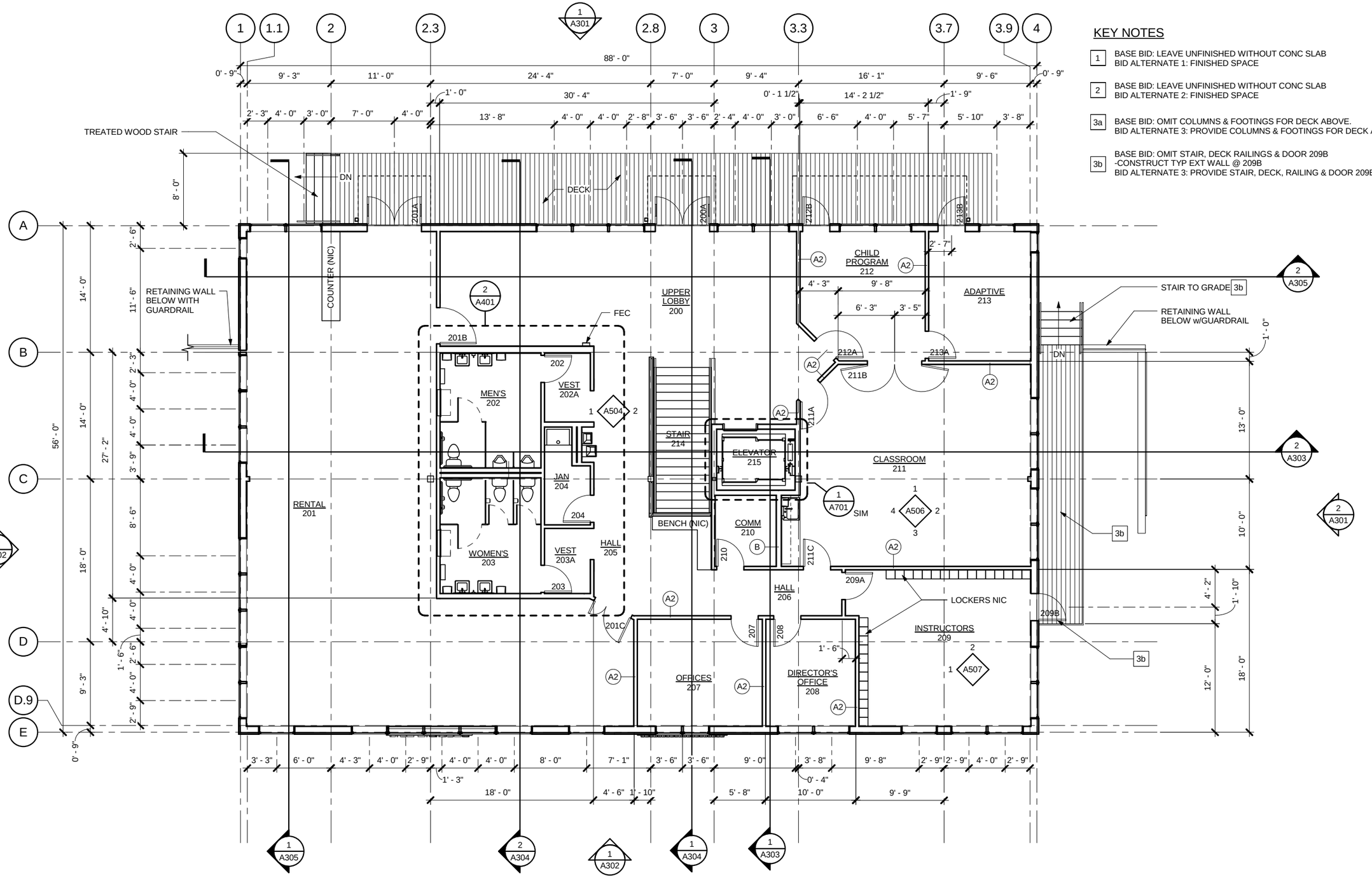

1 SECOND FLOOR PLAN

4,928sf

SCALE: 0 2" 4" 8" 16"

Jensen Yorba Lott Inc.
522 West 10th Street
Juneau, Alaska 99801
Phone 907-586-1070
Fax 907-586-3959
jensenyorbalott.com

STATE OF ALASKA — 49TH — JOANNE LOTT — 10/28/13 — ARCHITECT — REGISTERED PROFESSIONAL

CITY & BOROUGH OF JUNEAU
EAGLECREST LEARNING CENTER
CBJ CONTRACT No. E014-076

REVISIONS

SHEET TITLE
SECOND FLOOR PLAN

DATE: October 28, 2013
FILE: 13031

A202

10/28/2013 4:36:07 PM C:\Users\adeguzman\Documents\My Revit Projects\13031 - Eaglecrest Learning Center CD_adeguzman.rvt

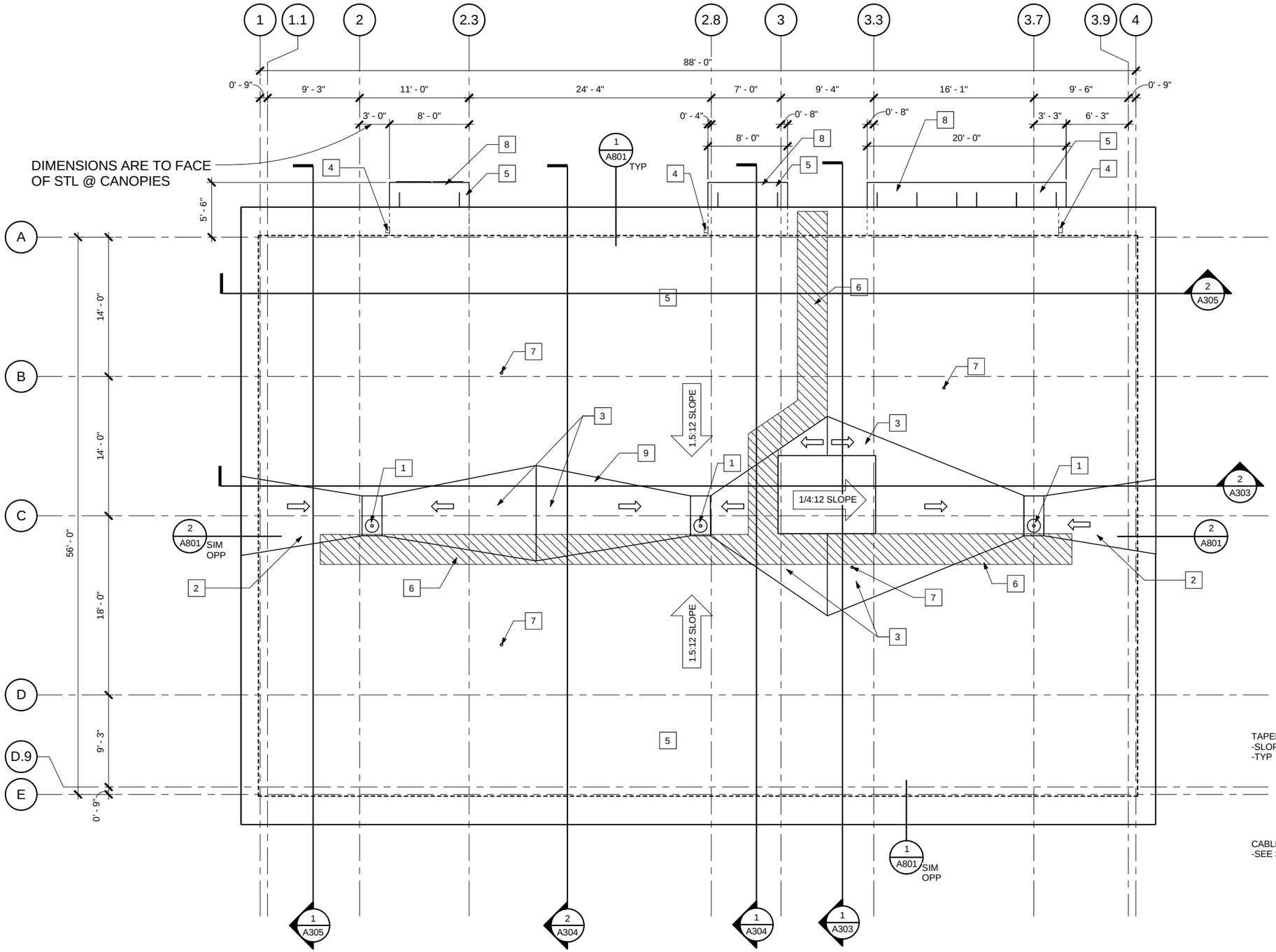

KEY NOTES:

1. ROOF DRAIN w/ HEAT TRACE -SEE 3/A801
2. TAPERED INSULATION OVER ROOF INSUL 1/4"/FT SLOPE UP FROM DRAIN
3. TAPERED INSULATION CRICKET -SLOPE 1/4"/FT
4. CONDUCTOR HEAD & DOWNSPOUT w/ HEAT TRACE
5. PVC ROOF
6. 3'-0" WIDE WALKWAY PAD
7. VENT THROUGH ROOF -SEE MECH
8. CANOPY BELOW -SEE 2/A203, 4/A804, & 5/A804
9. TAPERED INSUL OVER ROOF -INSUL TO CREATE SLOPE

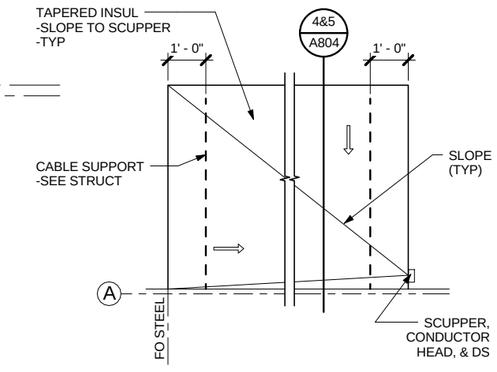

1 ROOF PLAN

SCALE: 0 2' 4' 8' 16'

2 CANOPY

SCALE: 0 1' 2' 4'

Jensen Yorba Lott
Inc.
522 West 10th Street
Juneau, Alaska 99801
Phone 907-586-1070
Fax 907-586-3959
jensenyorbalott.com

STATE OF ALASKA 49TH JOANNE LOTT 10/28/13 ARCHITECT PROFESSIONAL ASSOCIATE

CITY & BOROUGH OF JUNEAU
EAGLECREST LEARNING CENTER
CBJ CONTRACT No. E014-076

REVISIONS

SHEET TITLE
ROOF PLAN

DATE: October 28, 2013
FILE: 13031

A203

10/28/2013 4:36:08 PM C:\Users\adeguzman\Documents\My Revit Projects\13031 - Eaglecrest Learning Center CD_adeguzman.rvt

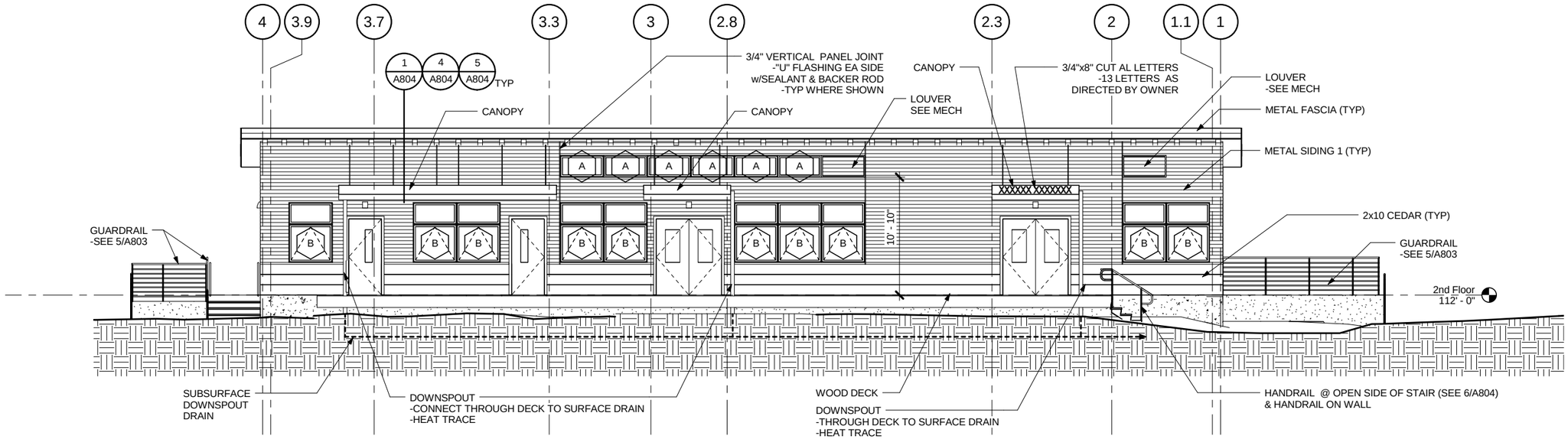

1 EXTERIOR ELEVATION

SCALE: 0 2' 4' 8' 16'

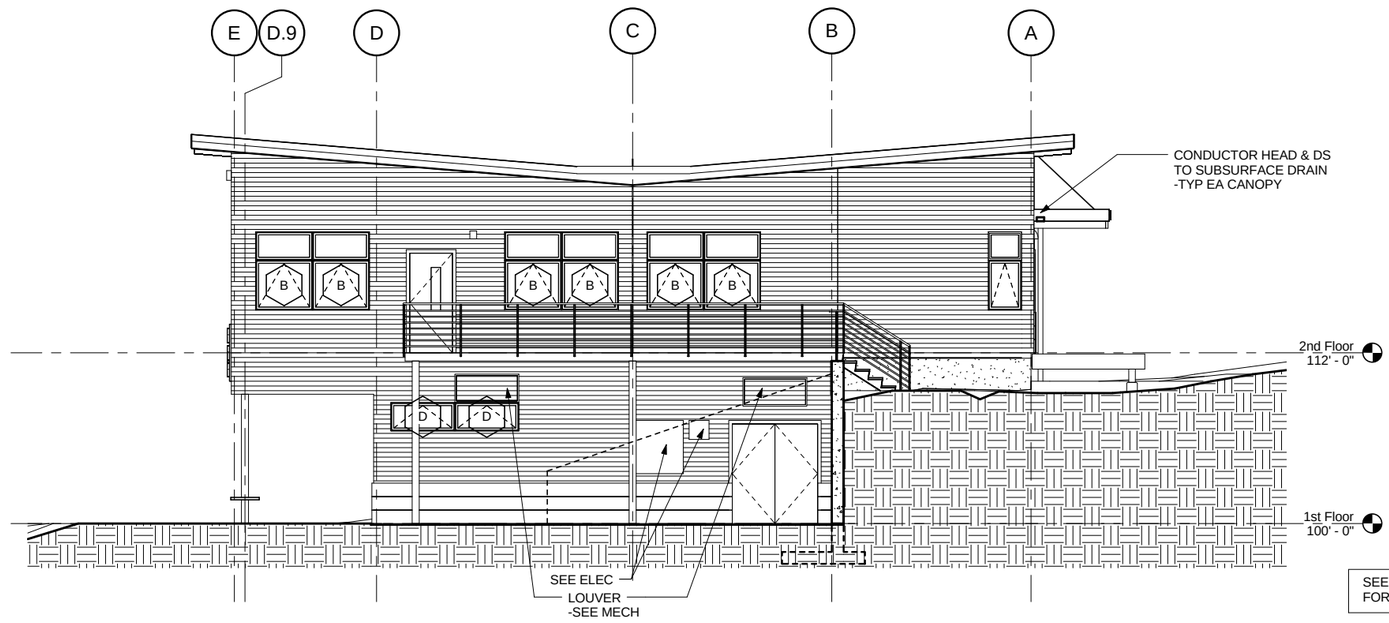

2 EXTERIOR ELEVATION

SCALE: 0 2' 4' 8' 16'

Jensen Yorba Lott Inc.
522 West 10th Street
Juneau, Alaska 99801
Phone 907-586-1070
Fax 907-586-3959
jensenyorbalott.com

STATE OF ALASKA 49TH JOANNE LOTT 10/28/13 AR A705 REGISTERED PROFESSIONAL ARCHITECT

CITY & BOROUGH OF JUNEAU
EAGLECREST LEARNING CENTER
CBJ CONTRACT No. E014-076

REVISIONS

SHEET TITLE
EXTERIOR ELEVATIONS

DATE: October 28, 2013
FILE: 13031

A301

10/28/2013 4:36:11 PM C:\Users\adeguzman\Documents\My Revit Projects\13031 - Eaglecrest Learning Center CD_adeguzman.rvt

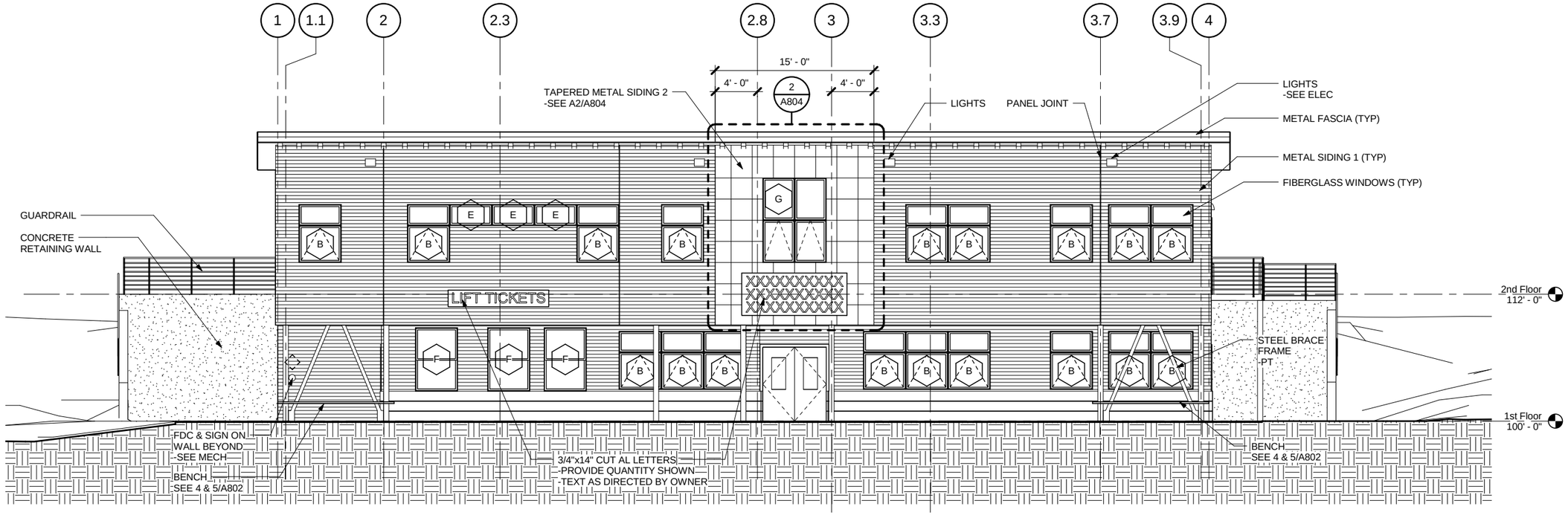

1 EXTERIOR ELEVATION

SCALE: 0 2' 4' 8' 16'

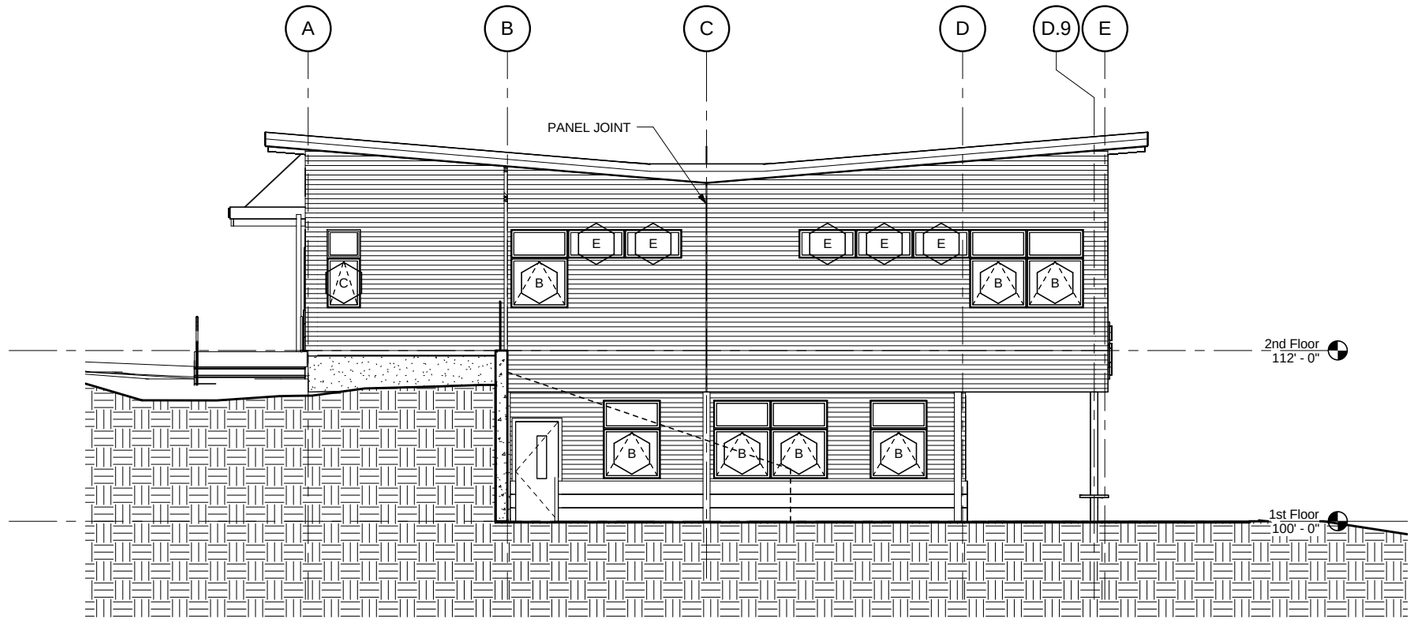

SEE FLOOR PLANS & SPECIFICATIONS
FOR BASE BID & ALTERNATE WORK

2 EXTERIOR ELEVATION

SCALE: 0 2' 4' 8' 16'

Jensen Yorba Lott Inc.
522 West 10th Street
Juneau, Alaska 99801
Phone 907-586-1070
Fax 907-586-3959
jensenyorbalott.com

STATE OF ALASKA 49TH JOANNE LOTT 10/28/13 AR A705 REGISTERED PROFESSIONAL ARCHITECT

CITY & BOROUGH OF JUNEAU
EAGLECREST LEARNING CENTER
CBJ CONTRACT No. E014-076

REVISIONS

SHEET TITLE
EXTERIOR ELEVATION

DATE: October 28, 2013
FILE: 13031

A302

10/28/2013 4:36:13 PM C:\Users\adeguzman\Documents\My Revit Projects\13031 - Eaglecrest Learning Center CD_adeguzman.rvt

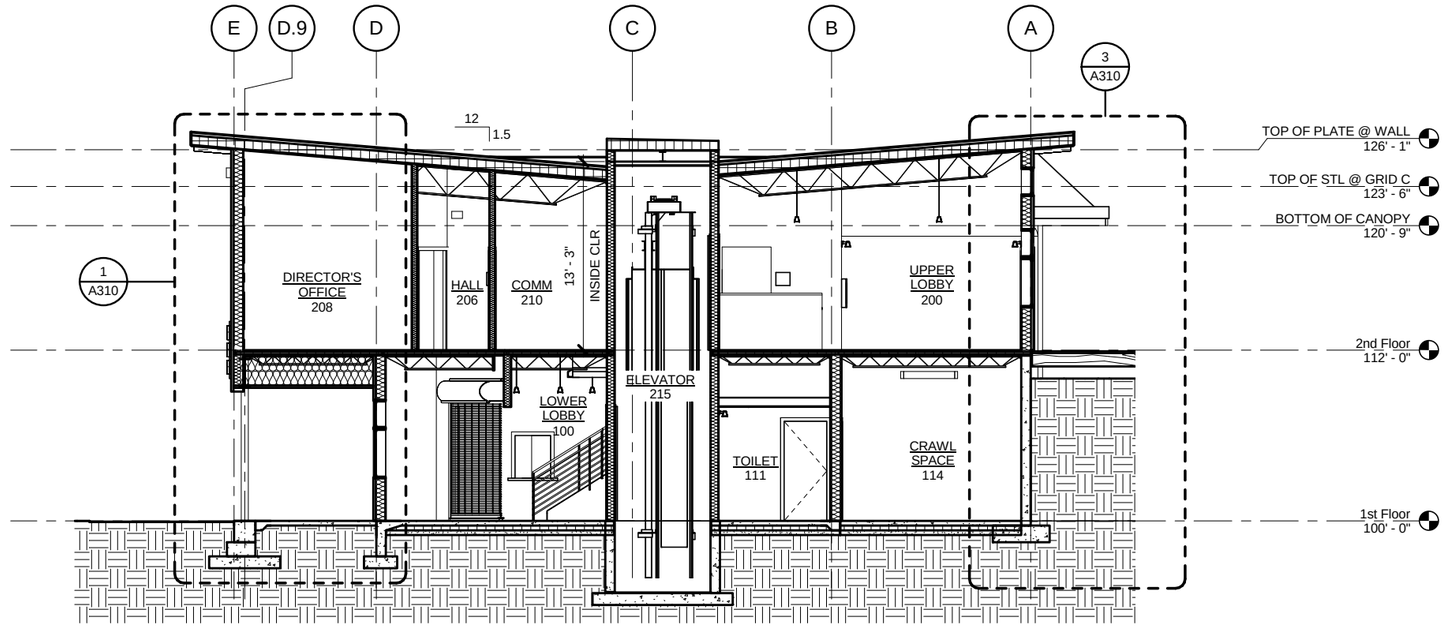

1 BUILDING SECTION

SCALE: 0 2' 4' 8' 16'

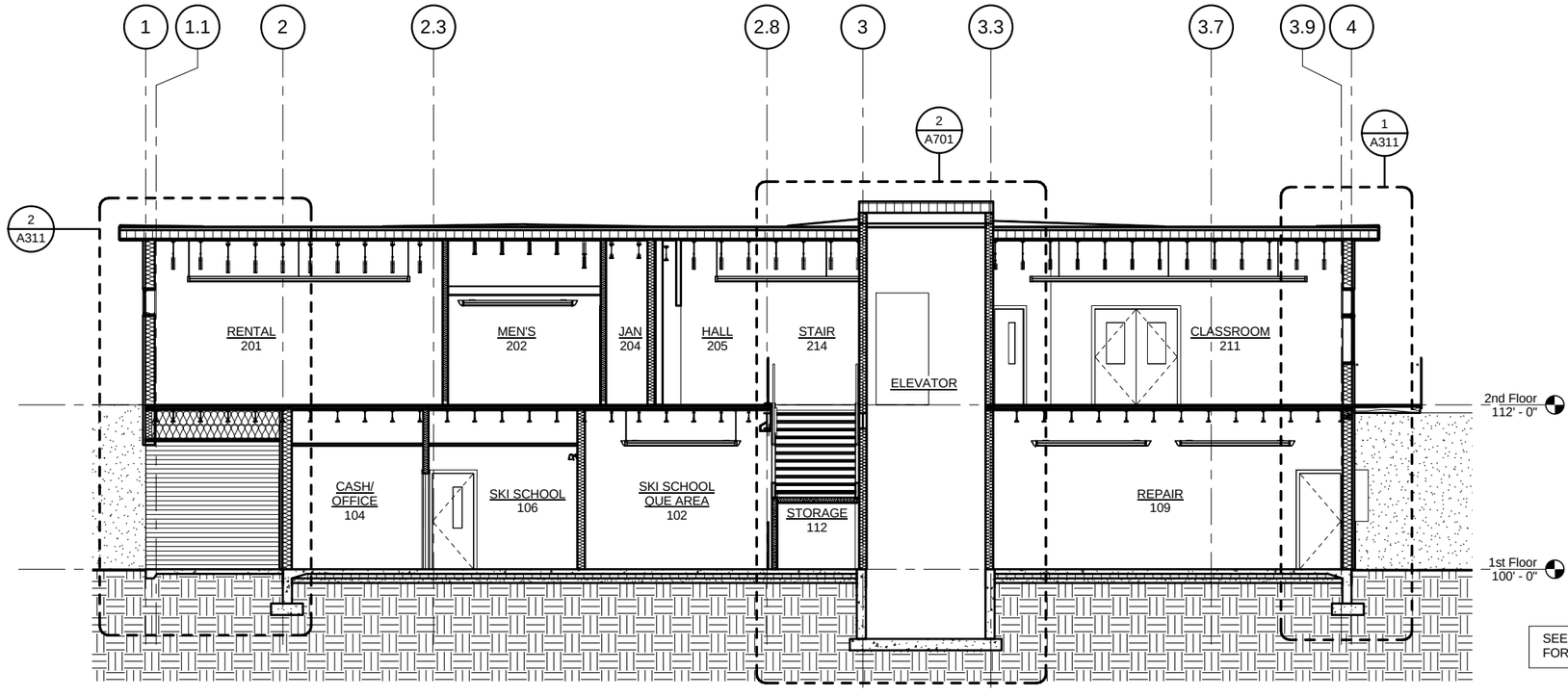

2 BUILDING SECTION

SCALE: 0 2' 4' 8' 16'

SEE FLOOR PLANS & SPECIFICATIONS FOR BASE BID & ALTERNATE WORK

Jensen Yorba Lott Inc.
522 West 10th Street
Juneau, Alaska 99801
Phone 907-586-1070
Fax 907-586-3959
jensenyorbalott.com

STATE OF ALASKA 49TH JOANNE LOTT 10/28/13 AK A705 REGISTERED PROFESSIONAL ARCHITECT

CITY & BOROUGH OF JUNEAU
EAGLECREST LEARNING CENTER
CBJ CONTRACT No. E014-076

REVISIONS

SHEET TITLE
BUILDING SECTIONS

DATE: October 28, 2013
FILE: 13031

A303

10/28/2013 4:36:19 PM C:\Users\adeguzman\Documents\My Revit Projects\13031 - Eaglecrest Learning Center CD_adeguzman.rvt

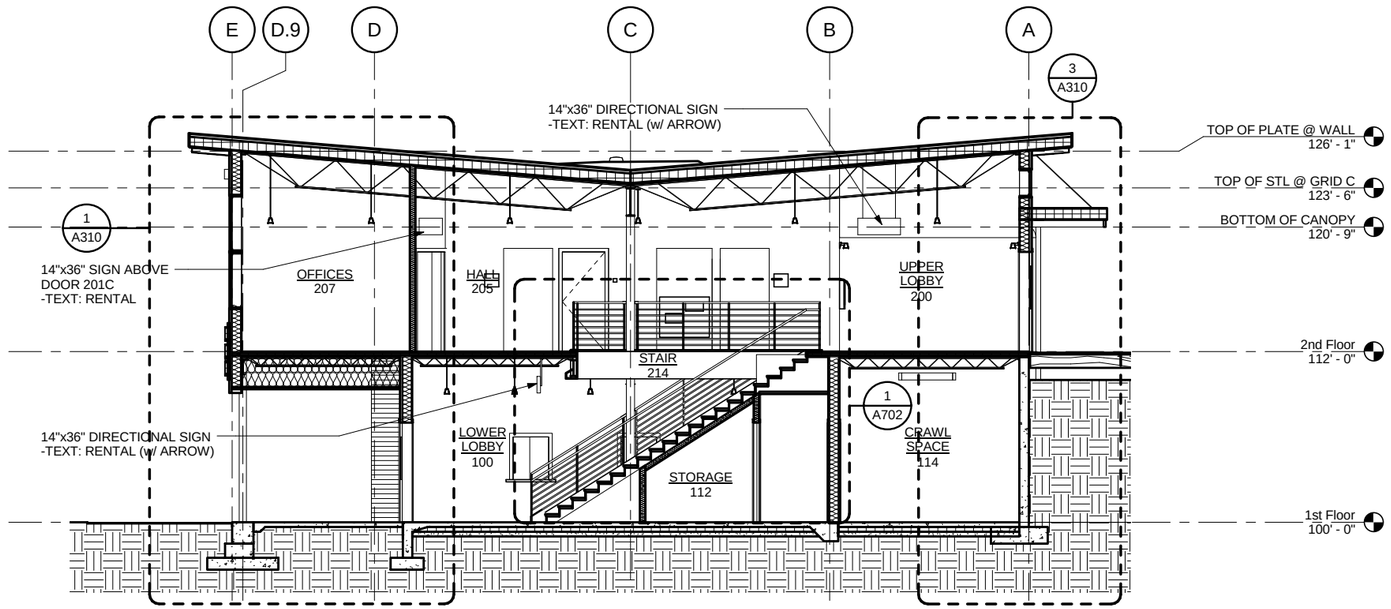

1 BUILDING SECTION

SCALE: 0 2" 4" 8" 16"

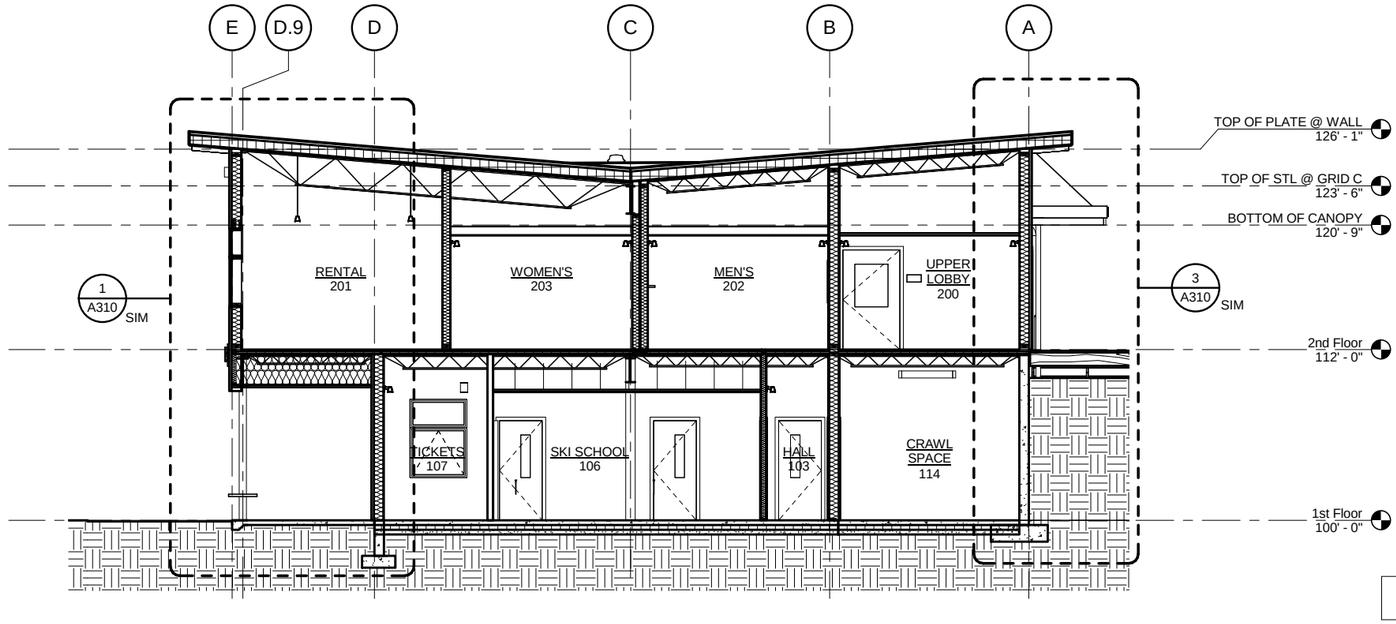

SEE FLOOR PLANS & SPECIFICATIONS
FOR BASE BID & ALTERNATE WORK

2 BUILDING SECTION

SCALE: 0 2" 4" 8" 16"

Jensen Yorba Lott Inc.
522 West 10th Street
Juneau, Alaska 99801
Phone 907-586-1070
Fax 907-586-3959
jensenyorbalott.com

STATE OF ALASKA 49TH JOANNE LOTT 10/28/13 No. A705 REGISTERED PROFESSIONAL ARCHITECT

CITY & BOROUGH OF JUNEAU
EAGLECREST LEARNING CENTER
CBJ CONTRACT No. E014-076

REVISIONS

SHEET TITLE
BUILDING SECTIONS

DATE: October 28, 2013
FILE: 13031

A304

10/28/2013 4:36:21 PM C:\Users\adeguzman\Documents\My Revit Projects\13031 - Eaglecrest Learning Center CD_adeguzman.rvt

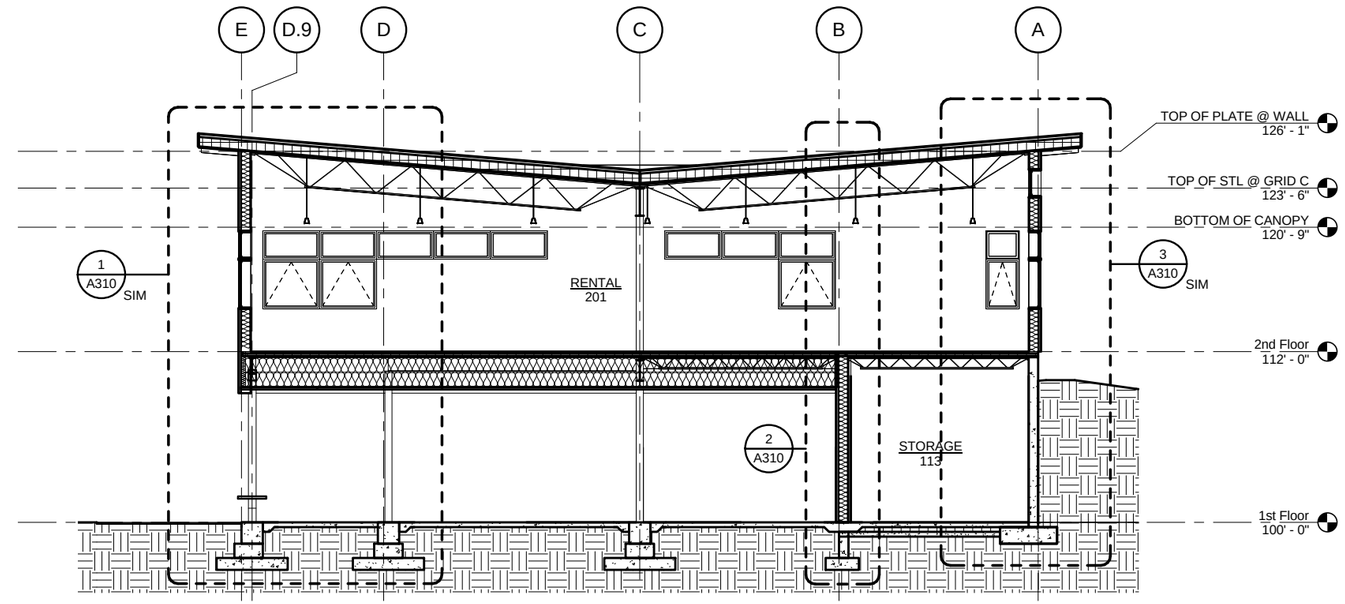

1 BUILDING SECTION

SCALE: 0 2' 4' 8' 16'

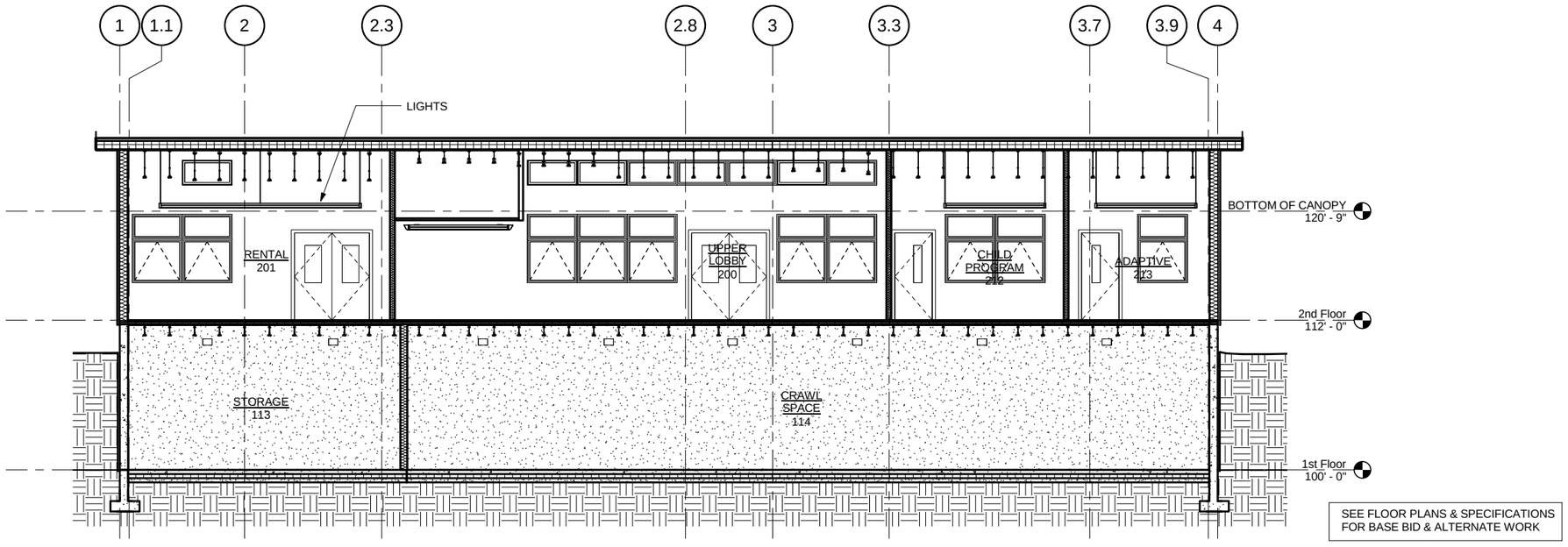

SEE FLOOR PLANS & SPECIFICATIONS FOR BASE BID & ALTERNATE WORK

2 BUILDING SECTION

SCALE: 0 2' 4' 8' 16'

Jensen Yorba Lott Inc.
522 West 10th Street
Juneau, Alaska 99801
Phone 907-586-1070
Fax 907-586-3959
jensenyorbalott.com

STATE OF ALASKA 49TH JOANNE LOTT 10/28/13 AK A705 REGISTERED PROFESSIONAL ARCHITECT

CITY & BOROUGH OF JUNEAU
EAGLECREST LEARNING CENTER
CBJ CONTRACT No. E014-076

REVISIONS

SHEET TITLE
BUILDING SECTIONS

DATE: October 28, 2013
FILE: 13031

A305

10/28/2013 4:36:23 PM C:\Users\adeguzman\Documents\My Revit Projects\13031 - Eaglecrest Learning Center CD_adeguzman.rvt

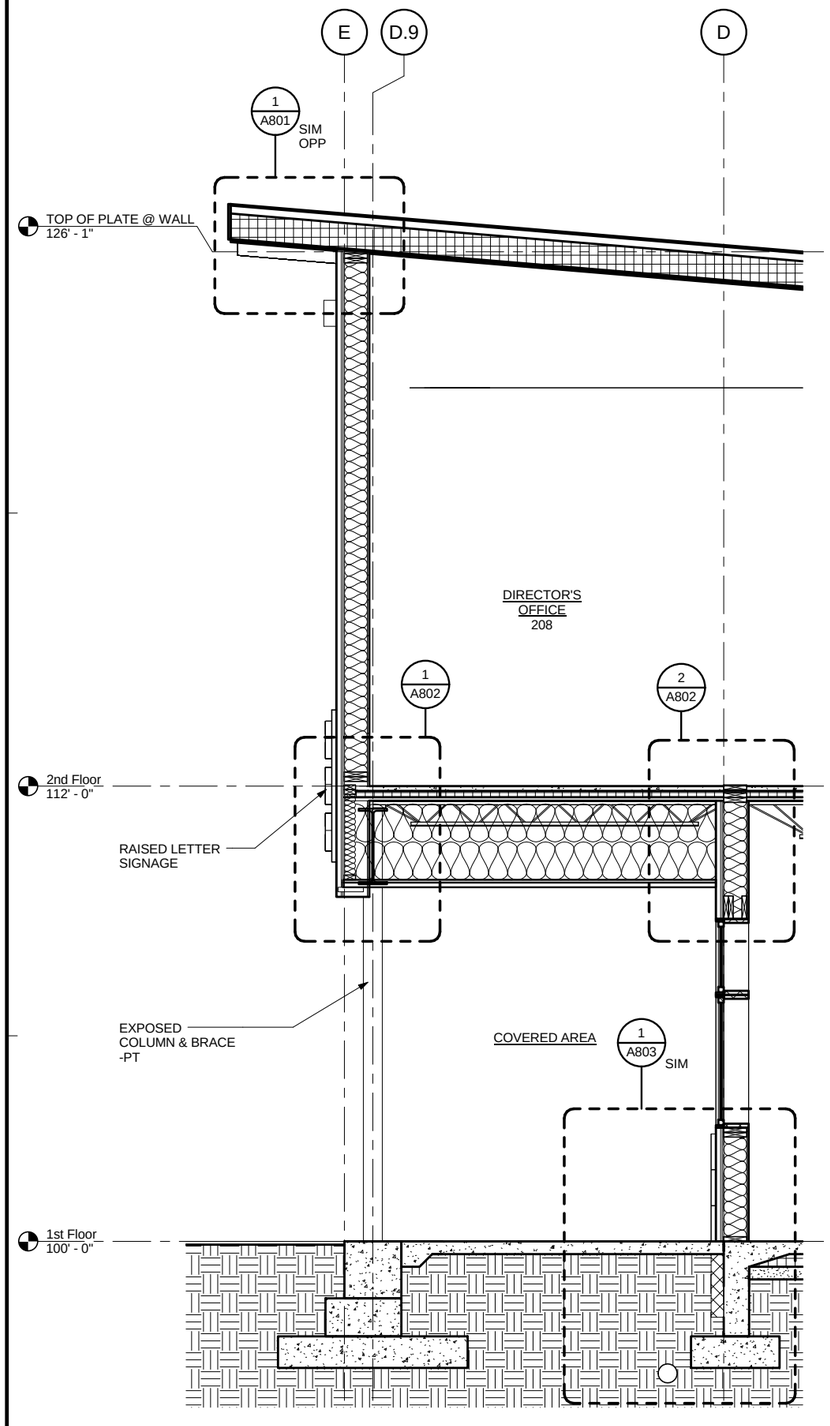

1 WALL SECTION

SCALE: 0 1' 2' 4'

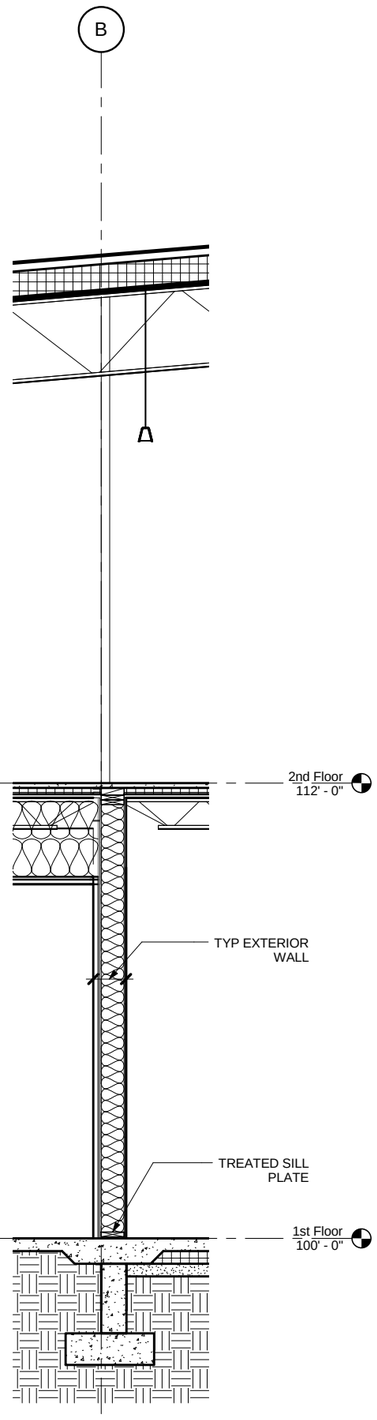

2 WALL SECTION

SCALE: 0 1' 2' 4'

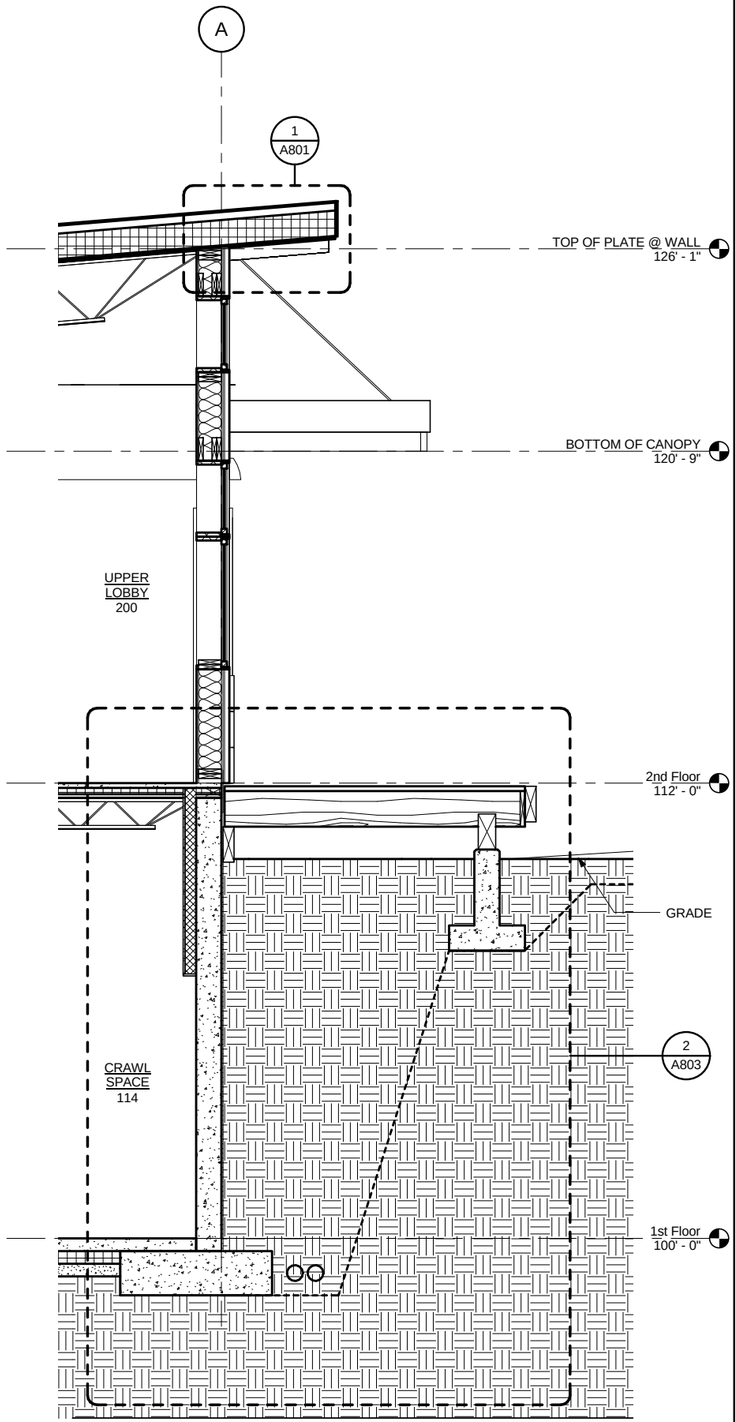

3 WALL SECTION

SCALE: 0 1' 2' 4'

SEE FLOOR PLANS & SPECIFICATIONS
FOR BASE BID & ALTERNATE WORK

Jensen Yorba Lott
Inc.
522 West 10th Street
Juneau, Alaska 99801
Phone 907-586-1070
Fax 907-586-3959
jensenyorbalott.com

STATE OF ALASKA
49TH
JOANNE LOTT
10/28/13
AK A705
REGISTERED PROFESSIONAL ARCHITECT

CITY & BOROUGH OF JUNEAU
EAGLECREST LEARNING CENTER
CBJ CONTRACT No. E014-076

REVISIONS

SHEET TITLE
WALL SECTIONS

DATE: October 28, 2013
FILE: 13031

A310

C:\Users\sdeguzman\Documents\My Revit Projects\13031 - Eaglecrest Learning Center CD_adeguzman.rvt
10/28/2013 4:36:25 PM

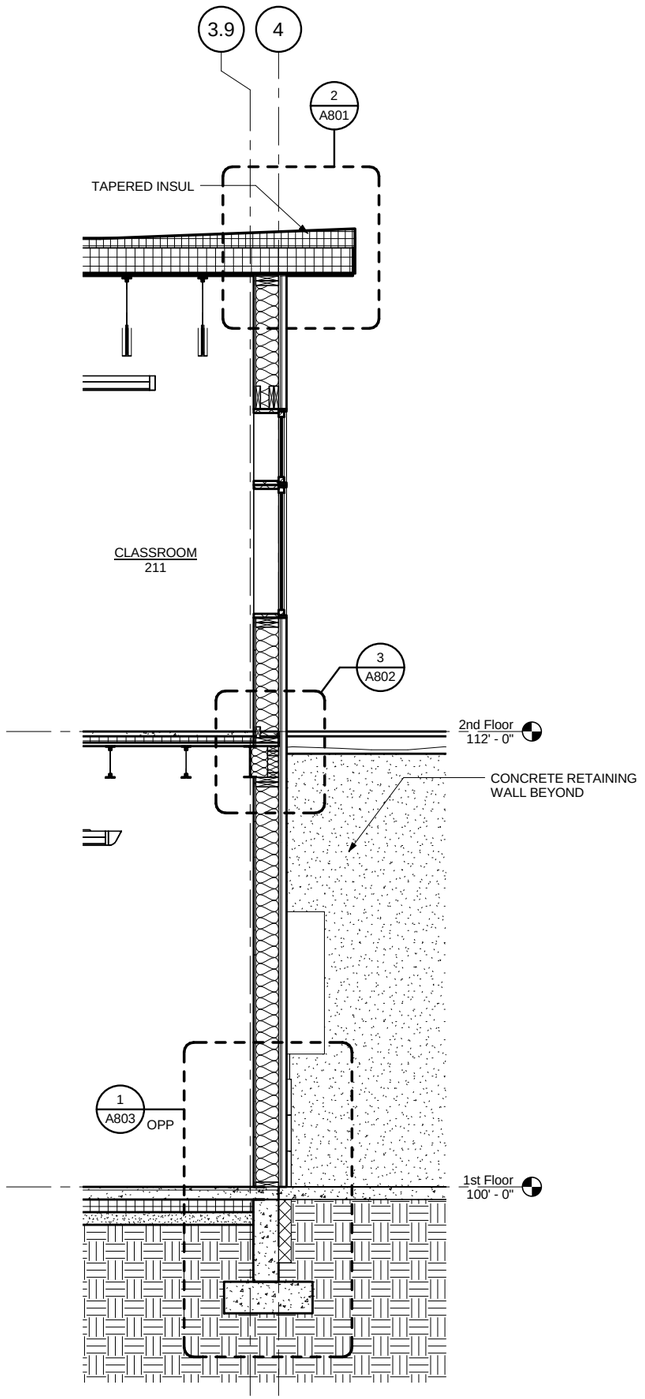

1 A311/1 WALL SECTION

SCALE: 0 1' 2' 4'

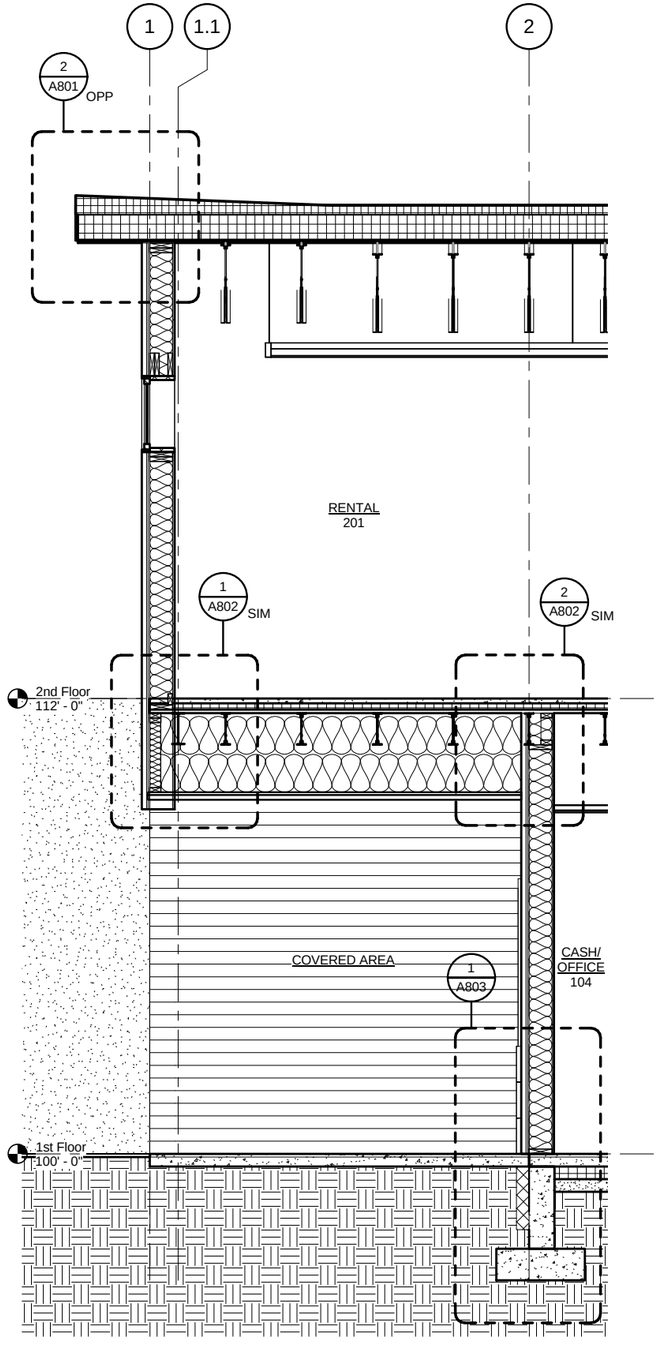

2 WALL SECTION

SCALE: 0 1' 2' 4'

SEE FLOOR PLANS & SPECIFICATIONS
FOR BASE BID & ALTERNATE WORK

Jensen Yorba Lott Inc.
522 West 10th Street
Juneau, Alaska 99801
Phone 907-586-1070
Fax 907-586-3959
jensenyorbalott.com

STATE OF ALASKA
49TH
JOANNE LOTT
10/28/13
AR A706
REGISTERED PROFESSIONAL ARCHITECT

CITY & BOROUGH OF JUNEAU
EAGLECREST LEARNING CENTER
CBJ CONTRACT No. E014-076

REVISIONS

SHEET TITLE
WALL SECTIONS

DATE: October 28, 2013
FILE: 13031

A311

10/28/2013 4:36:26 PM C:\Users\sdeguzman\Documents\My Revit Projects\13031 - Eaglecrest Learning Center CD_adeguzman.rvt

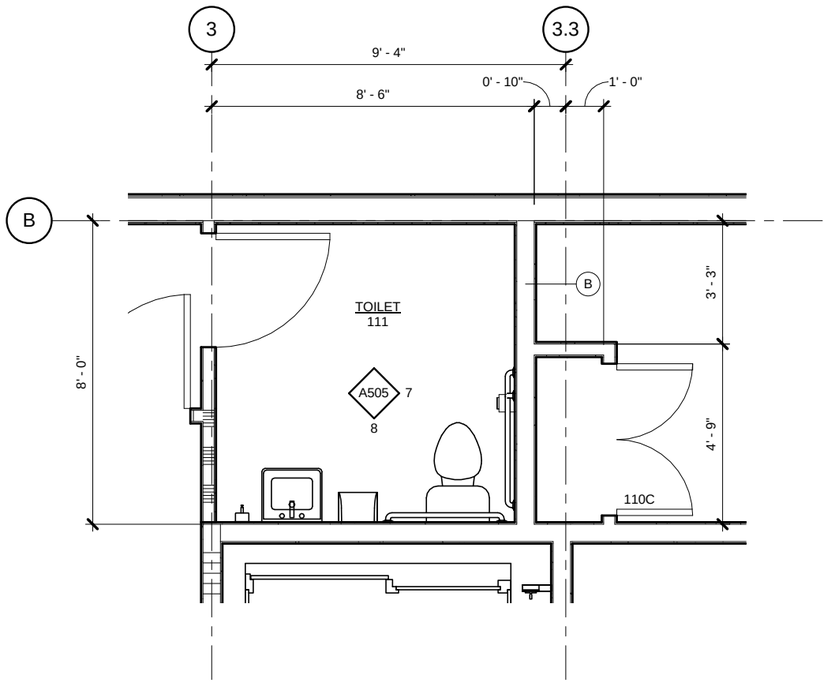

1 ENLARGED FLOOR PLAN

SCALE: 0 1' 2' 4'

SEE A500 FOR MOUNTING LOCATIONS

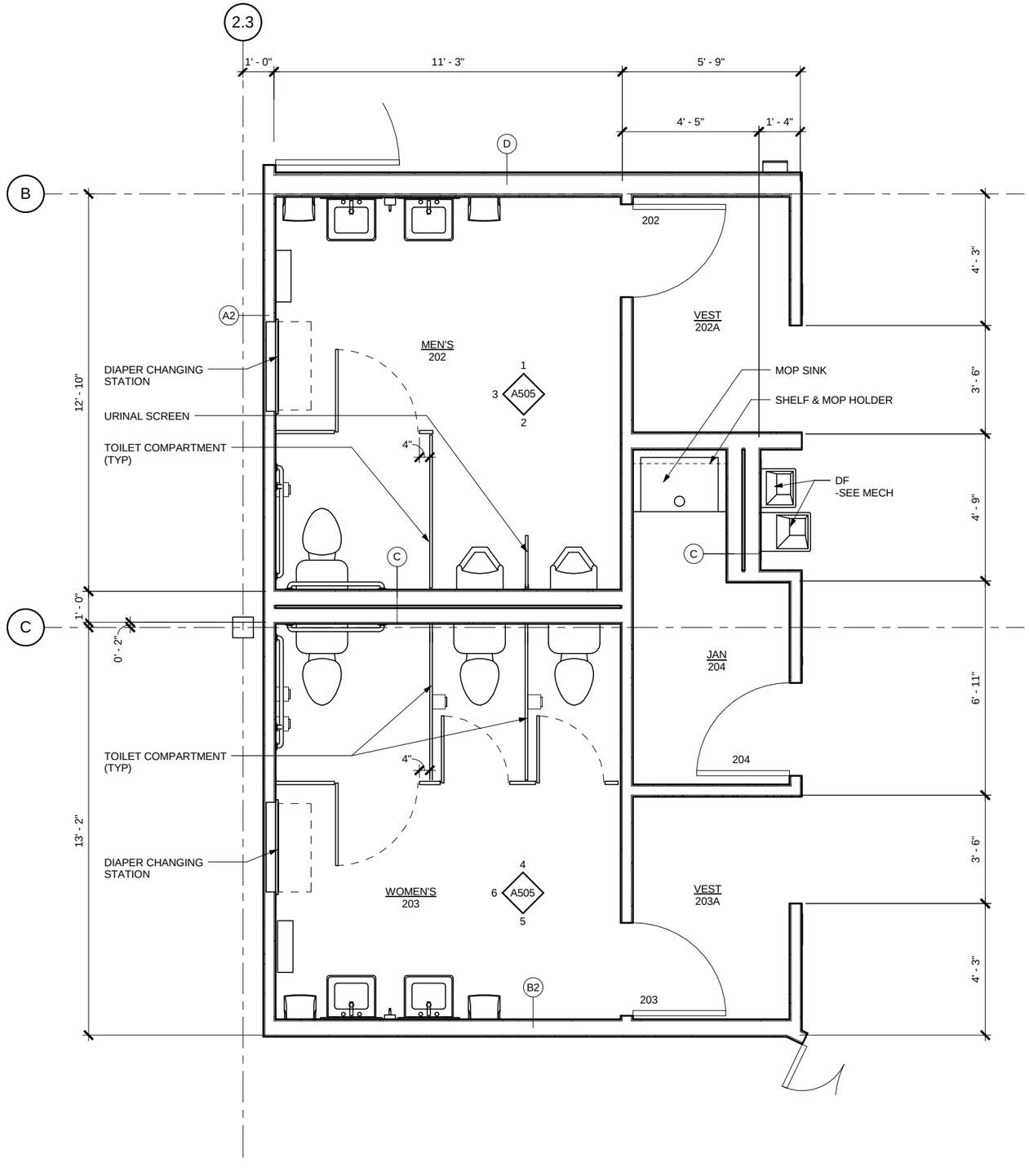

2 ENLARGED FLOOR PLAN

SCALE: 0 1' 2' 4'

Jensen Yorba Lott Inc.

522 West 10th Street
Juneau, Alaska 99801
Phone 907-586-1070
Fax 907-586-3959
jensenyorbalott.com

STATE OF ALASKA 49TH JOANNE E. LOTT 10/28/13 No. A 7806 REGISTERED PROFESSIONAL ARCHITECT

CITY & BOROUGH OF JUNEAU
EAGLECREST LEARNING CENTER
CBJ CONTRACT No. E014-076

REVISIONS

SHEET TITLE
ENLARGED FLOOR PLANS

DATE: October 28, 2013
FILE: 13031

A401

C:\Users\adeguzman\Documents\My Revit Projects\13031 - Eaglecrest Learning Center CD_adeguzman.rvt

10/28/2013 4:36:27 PM

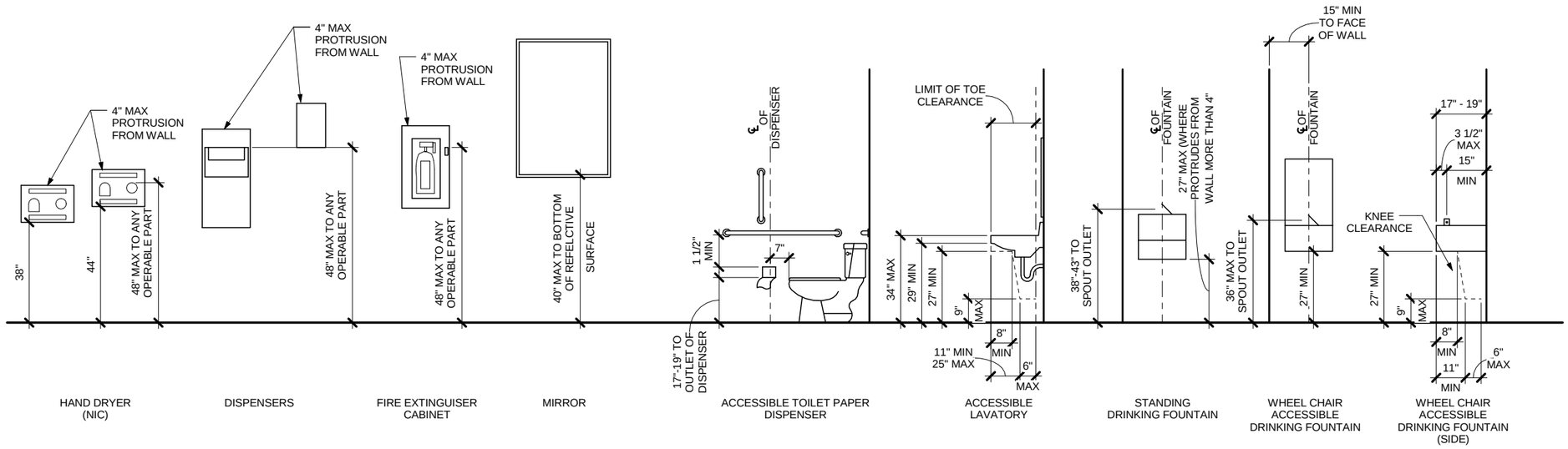

HAND DRYER (NIC) | DISPENSERS | FIRE EXTINGUISER CABINET | MIRROR | ACCESSIBLE TOILET PAPER DISPENSER | ACCESSIBLE LAVATORY | STANDING DRINKING FOUNTAIN | WHEEL CHAIR ACCESSIBLE DRINKING FOUNTAIN | WHEEL CHAIR ACCESSIBLE DRINKING FOUNTAIN (SIDE)

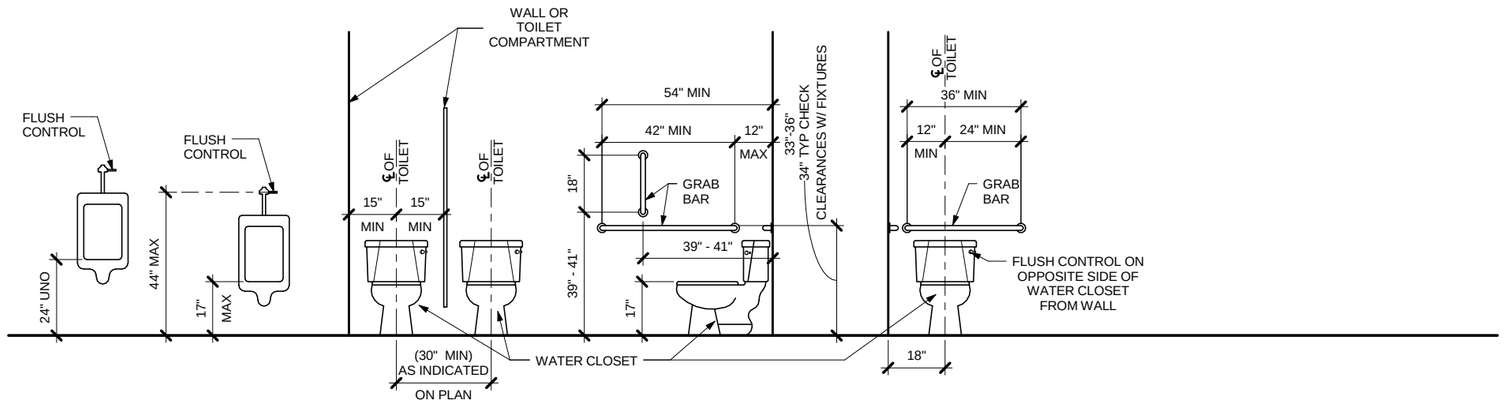

STANDARD URINAL | ACCESSIBLE URINAL | STANDARD WATER CLOSET/TOILET | ACCESSIBLE WATER CLOSET/TOILET (SIDE WALL) | ACCESSIBLE WATER CLOSET/TOILET (REAR WALL)

1 STANDARD FIXTURE HEIGHTS

SCALE: 0 1' 2' 4'

Jensen Yorba Lott Inc.
522 West 10th Street
Juneau, Alaska 99801
Phone 907-586-1070
Fax 907-586-3959
jensenyorbalott.com

STATE OF ALASKA 49TH JOANNE LOTT 10/28/13 AR A706 REGISTERED PROFESSIONAL ARCHITECT

CITY & BOROUGH OF JUNEAU
EAGLECREST LEARNING CENTER
CBJ CONTRACT No. E014-076

REVISIONS

SHEET TITLE
STANDARD FIXTURE HEIGHTS

DATE: October 28, 2013
FILE: 13031

A500

10/28/2013 4:36:28 PM C:\Users\adeguzman\Documents\My Revit Projects\13031 - Eaglecrest Learning Center CD_adeguzman.rvt

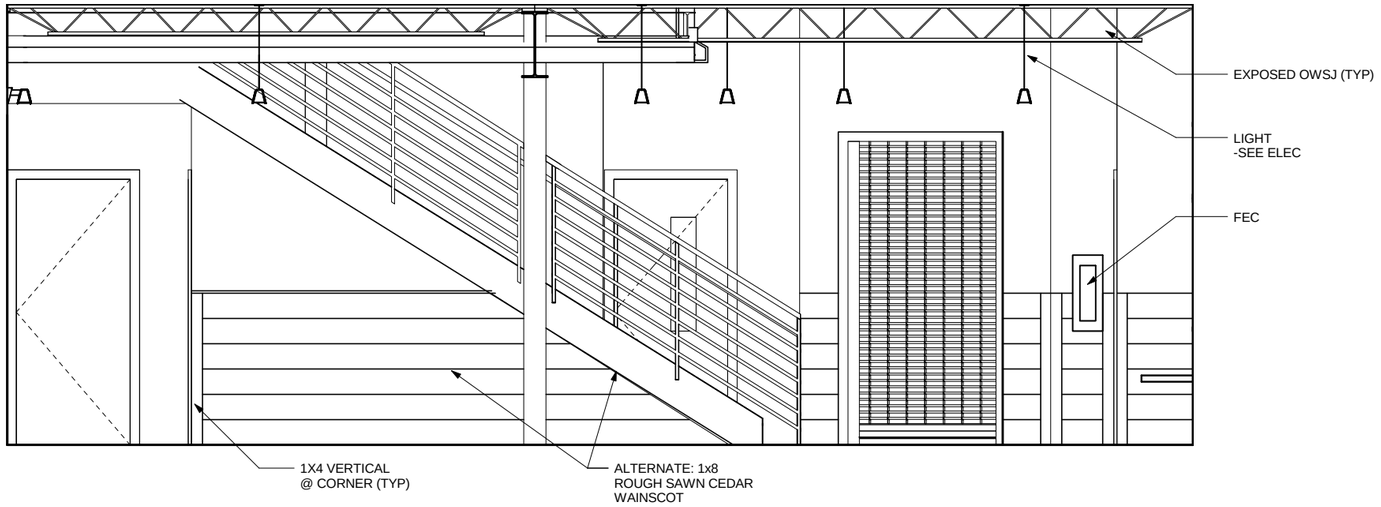

1 SKI SCHOOL QUE 102

SCALE: 0 1' 2' 4'

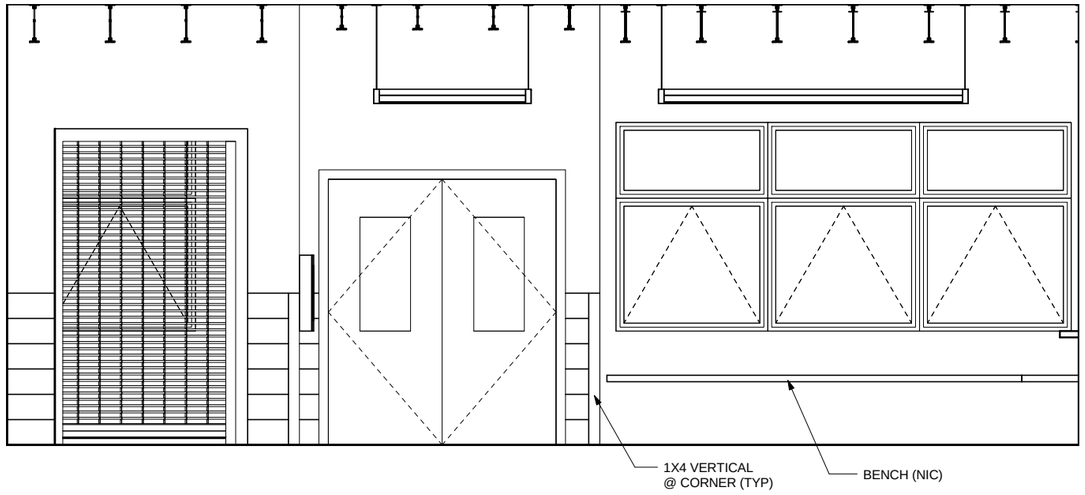

2 SKI SCHOOL QUE 102

SCALE: 0 1' 2' 4'

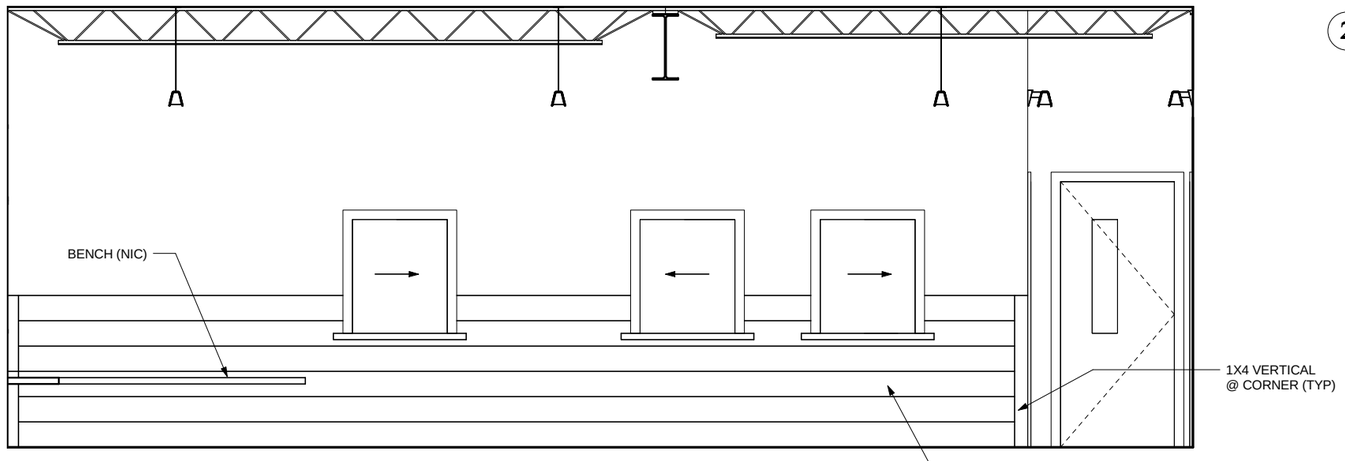

3 SKI SCHOOL QUE 101&102

SCALE: 0 1' 2' 4'

Jensen Yorba Lott
Inc.
522 West 10th Street
Juneau, Alaska 99801
Phone 907-586-1070
Fax 907-586-3959
jensenyorbalott.com

STATE OF ALASKA 49TH
JOANNE LOTT
10/28/13
AK A706
REGISTERED PROFESSIONAL ARCHITECT

CITY & BOROUGH OF JUNEAU
EAGLECREST LEARNING CENTER
CBJ CONTRACT No. E014-076

REVISIONS

SHEET TITLE
INTERIOR ELEVATIONS

DATE: October 28, 2013
FILE: 13031

A501

10/28/2013 4:36:33 PM C:\Users\adeguzman\Documents\My Revit Projects\13031 - Eaglecrest Learning Center CD_adeguzman.rvt

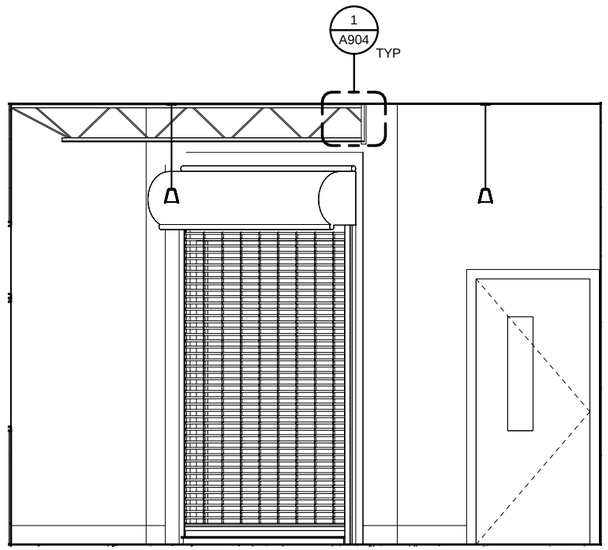

1 **RETAIL 108**

SCALE: 0 1' 2' 4'

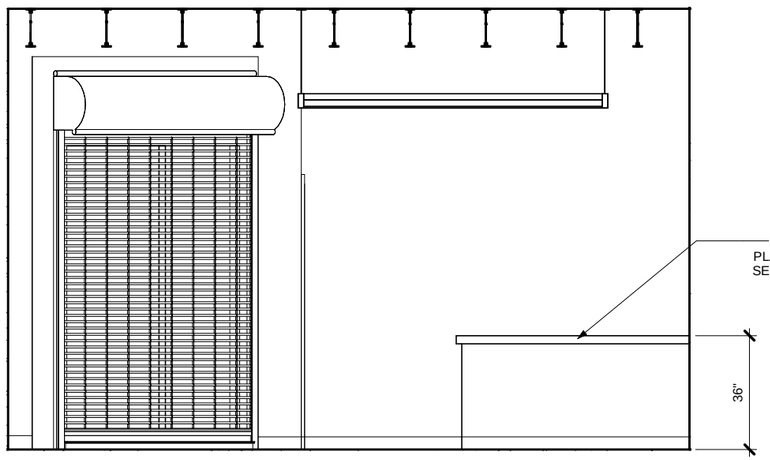

2 **RETAIL 108**

SCALE: 0 1' 2' 4'

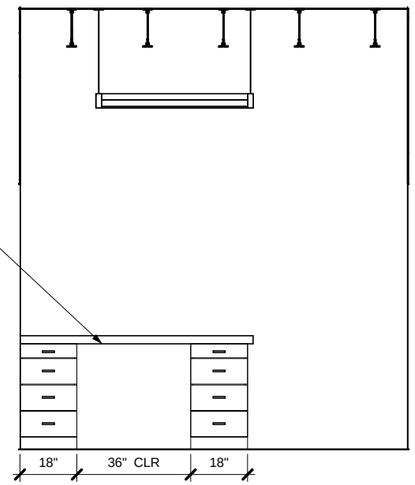

3 **RETAIL 108**

SCALE: 0 1' 2' 4'

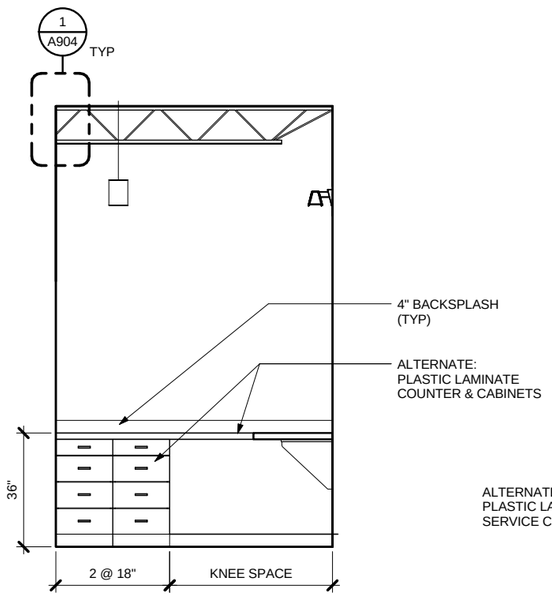

4 **TICKETS 107**

SCALE: 0 1' 2' 4'

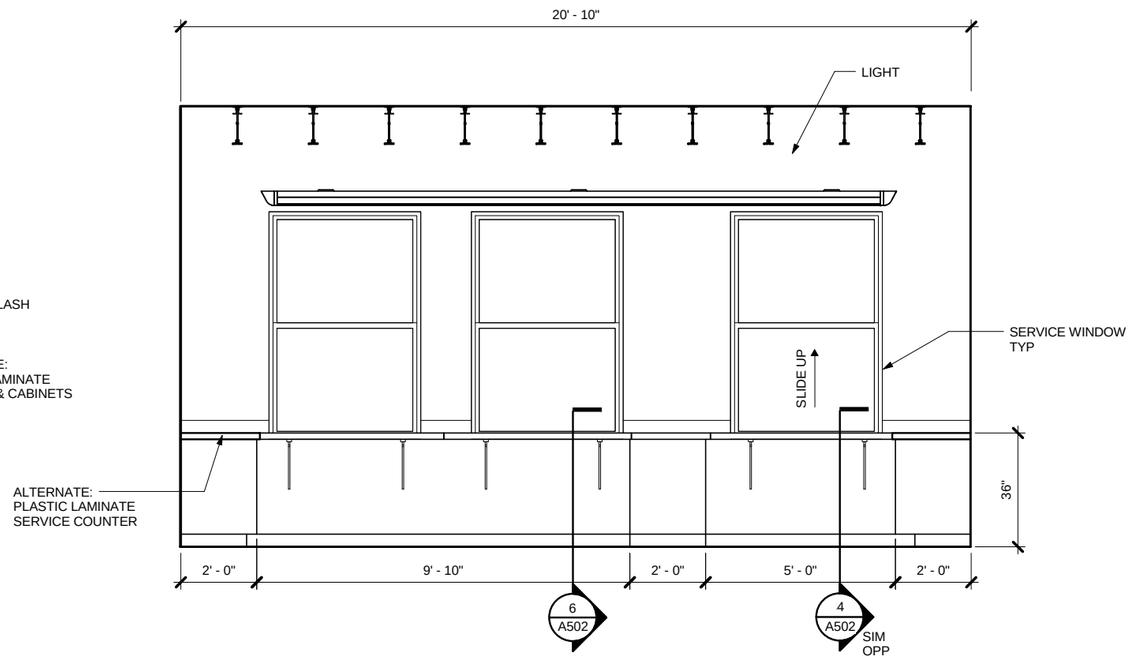

5 **TICKETS 107**

SCALE: 0 1' 2' 4'

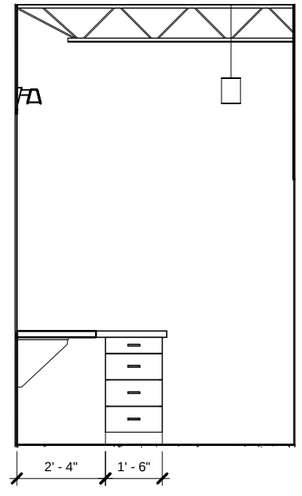

6 **TICKETS 107**

SCALE: 0 1' 2' 4'

Jensen Yorba Lott Inc.

522 West 10th Street
Juneau, Alaska 99801
Phone 907-586-1070
Fax 907-586-3959
jensenyorbalott.com

STATE OF ALASKA 49TH JOANNE LOTT 10/28/13 AR A705 REGISTERED PROFESSIONAL ARCHITECT

CITY & BOROUGH OF JUNEAU
EAGLECREST LEARNING CENTER
CBJ CONTRACT No. E014-076

REVISIONS

SHEET TITLE
INTERIOR ELEVATIONS

DATE: October 28, 2013
FILE: 13031

A502

10/28/2013 4:36:41 PM C:\Users\adeguzman\Documents\My Revit Projects\13031 - Eaglecrest Learning Center CD_adeguzman.rvt

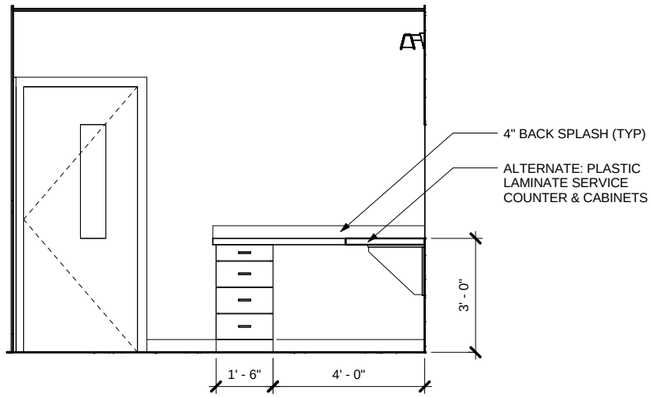

1 **SKI SCHOOL 106**

SCALE: 0 1' 2' 4'

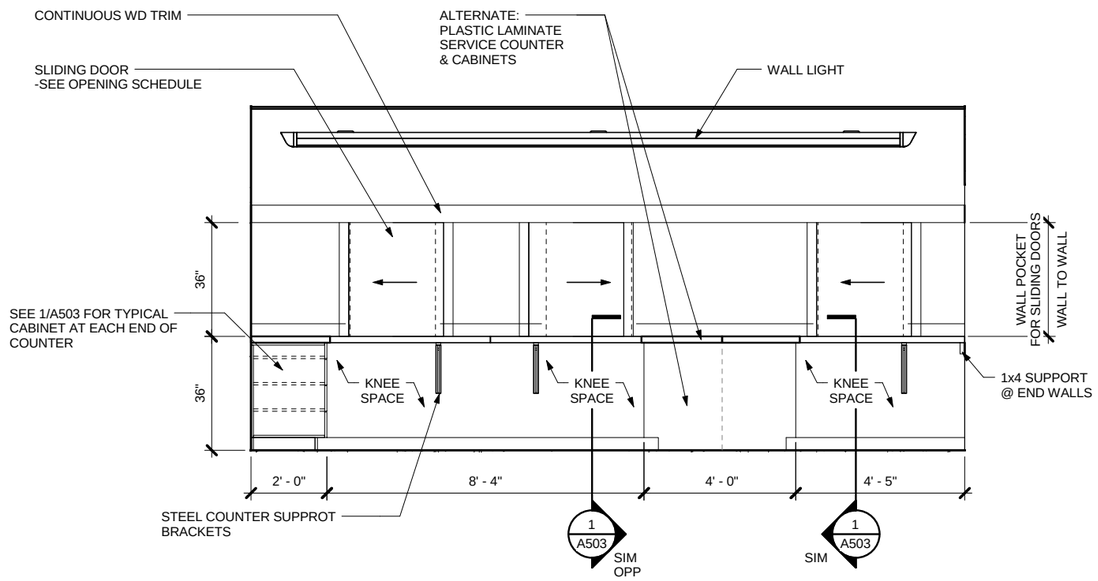

2 **SKI SCHOOL 106**

SCALE: 0 1' 2' 4'

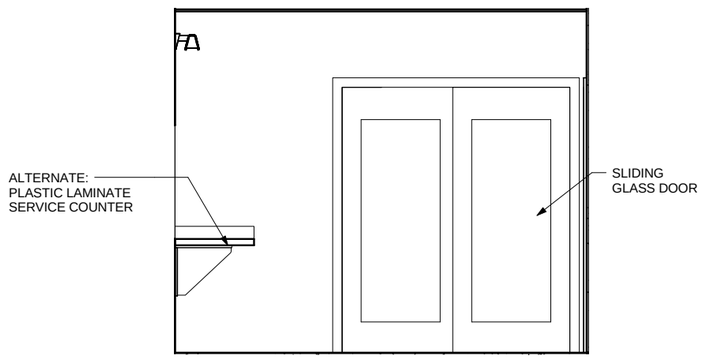

3 **SKI SCHOOL 106**

SCALE: 0 1' 2' 4'

Jensen Yorba Lott Inc.
522 West 10th Street
Juneau, Alaska 99801
Phone 907-586-1070
Fax 907-586-3959
jensenyorbalott.com

STATE OF ALASKA 49TH JOANNE LOTT 10/28/13 No. A-206 REGISTERED PROFESSIONAL ARCHITECT

CITY & BOROUGH OF JUNEAU
EAGLECREST LEARNING CENTER
CBJ CONTRACT No. E014-076

REVISIONS

SHEET TITLE
INTERIOR ELEVATIONS

DATE: October 28, 2013
FILE: 13031

A503

10/28/2013 4:36:44 PM C:\Users\adeguzman\Documents\My Revit Projects\13031 - Eaglecrest Learning Center CD_adeguzman.rvt

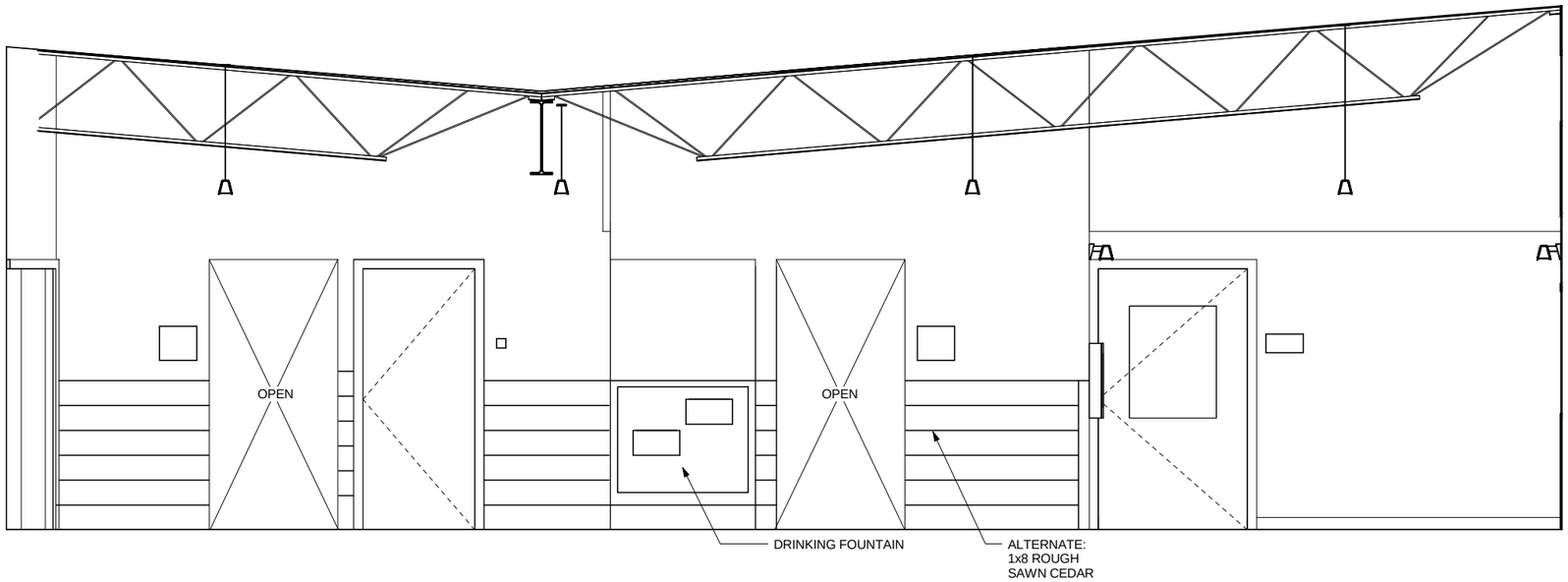

1 HALL 205

SCALE: 0 1' 2' 4'

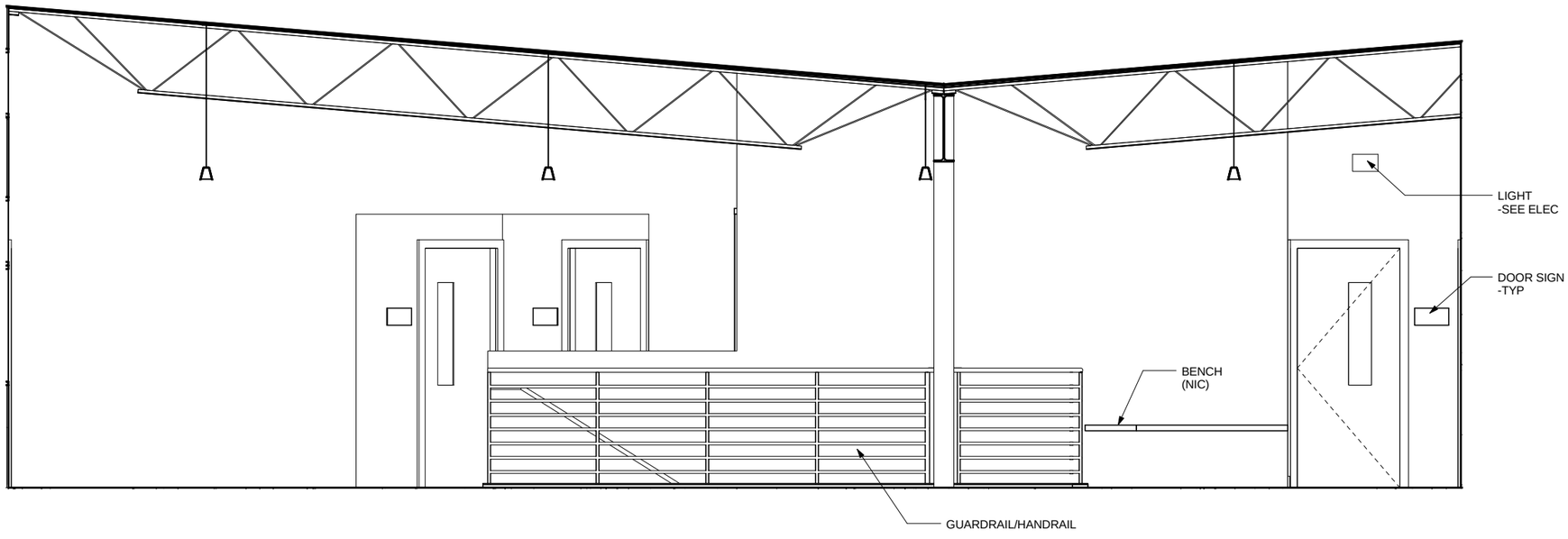

2 HALL 205

SCALE: 0 1' 2' 4'

Jensen Yorba Lott Inc.
522 West 10th Street
Juneau, Alaska 99801
Phone 907-586-1070
Fax 907-586-3959
jensenyorbalott.com

STATE OF ALASKA 49TH JOANNE E. LOTT 10/28/13 No. A 7806 REGISTERED PROFESSIONAL ARCHITECT

CITY & BOROUGH OF JUNEAU
EAGLECREST LEARNING CENTER
CBJ CONTRACT No. E014-076

REVISIONS

SHEET TITLE
INTERIOR ELEVATIONS

DATE: October 28, 2013
FILE: 13031

A504

C:\Users\adeguzman\Documents\My Revit Projects\13031 - Eaglecrest Learning Center CD_adeguzman.rvt
10/28/2013 4:36:45 PM

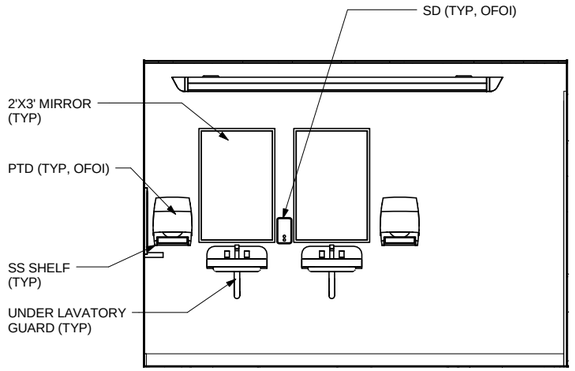

1 MEN'S 202

SCALE: 0 1" 2" 4"

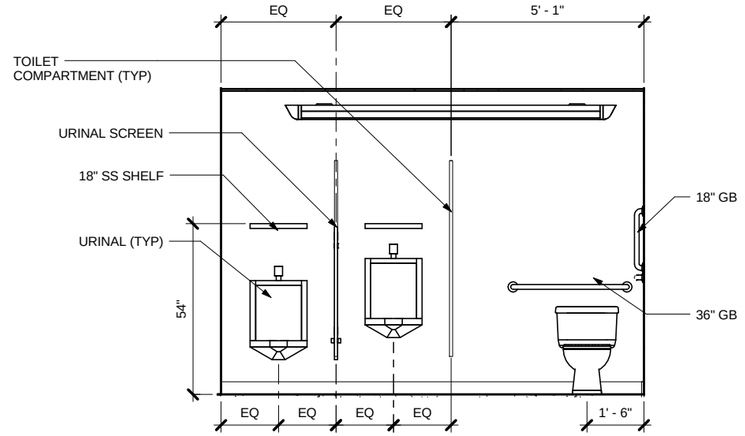

2 MEN'S 202

SCALE: 0 1" 2" 4"

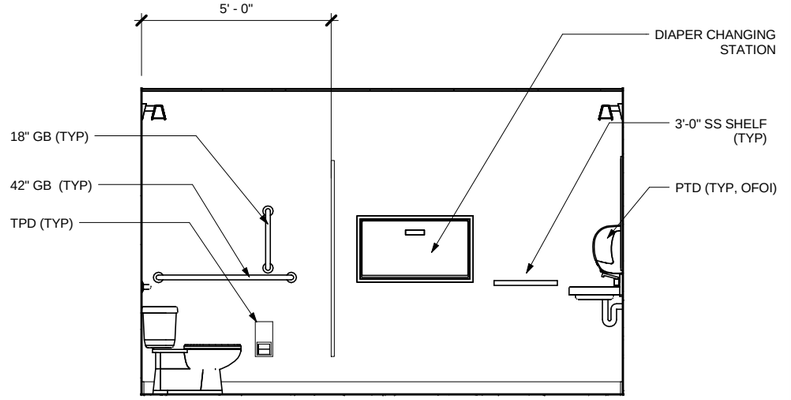

3 MEN'S 202

SCALE: 0 1" 2" 4"

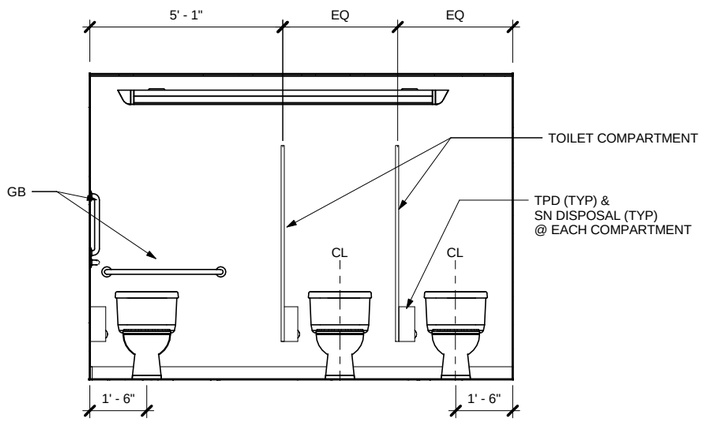

4 WOMEN'S 203

SCALE: 0 1" 2" 4"

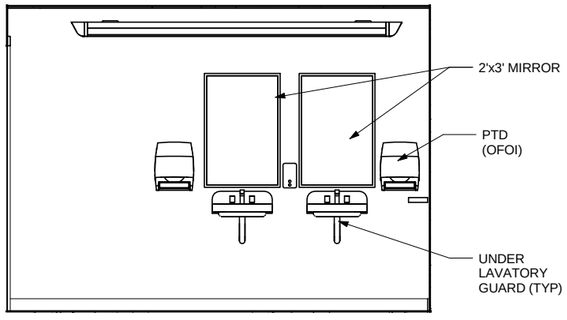

5 WOMEN'S 203

SCALE: 0 1" 2" 4"

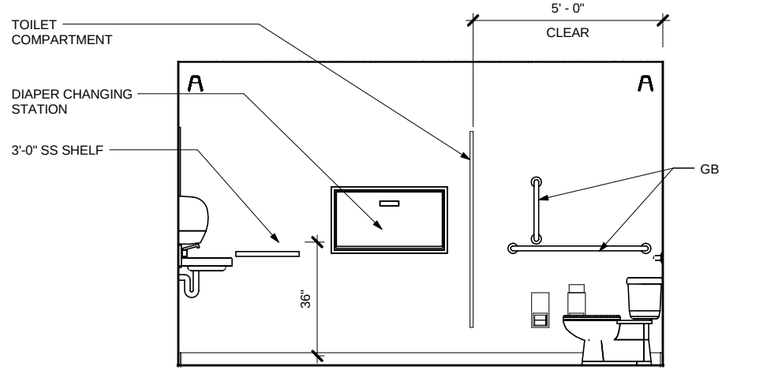

6 WOMEN'S 203

SCALE: 0 1" 2" 4"

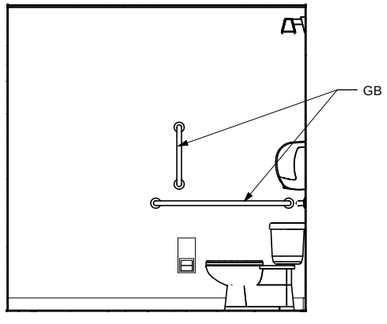

7 TOILET 111

SCALE: 0 1" 2" 4"

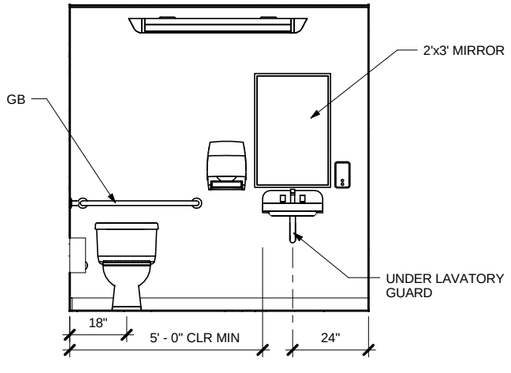

8 TOILET 111

SCALE: 0 1" 2" 4"

NOTE:
1. CONTRACTOR TO PROVIDE REQ BLKG FOR ALL TOILET ACCESSORIES INCLUDING OFOI TOILET ACCESSORIES
   -SEE A500 FOR STANDARD HEIGHTS
   -REFER TO INSTALLATION INSTRUCTIONS FOR EACH ITEM FOR BLKG LOCATION

Jensen Yorba Lott Inc.
522 West 10th Street
Juneau, Alaska 99801
Phone 907-586-1070
Fax 907-586-3959
jensenyorbalott.com

STATE OF ALASKA 49TH JOANNE LOTT 10/28/13 ARCHITECTURAL PROFESSIONAL ASSOCIATE

CITY & BOROUGH OF JUNEAU
EAGLECREST LEARNING CENTER
CBJ CONTRACT No. E014-076

REVISIONS

SHEET TITLE
INTERIOR ELEVATIONS

DATE: October 28, 2013
FILE: 13031

A505

10/28/2013 4:36:48 PM C:\Users\adeguzman\Documents\My Revit Projects\13031 - Eaglecrest Learning Center CD_adeguzman.rvt

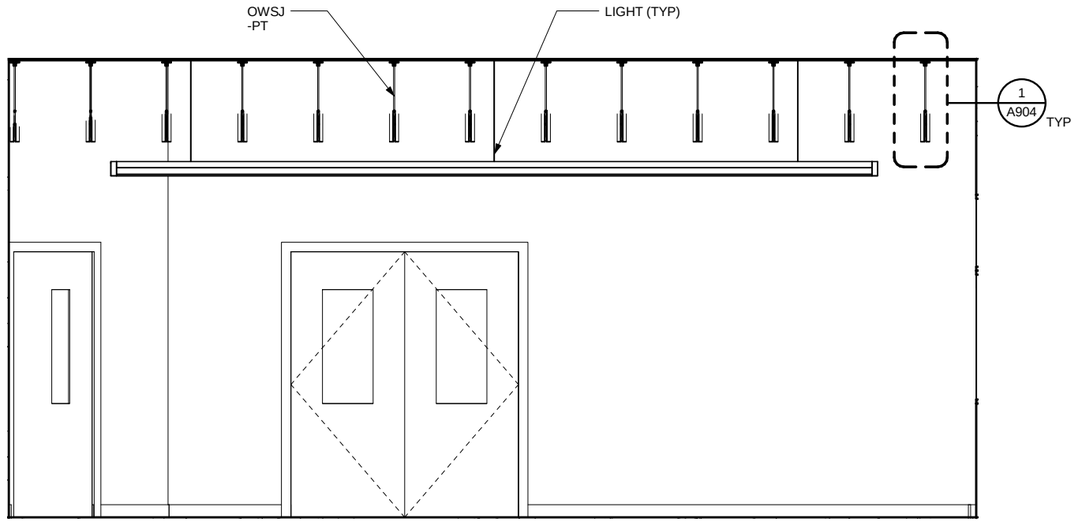

1 CLASSROOM 211

SCALE: 0 1' 2' 4'

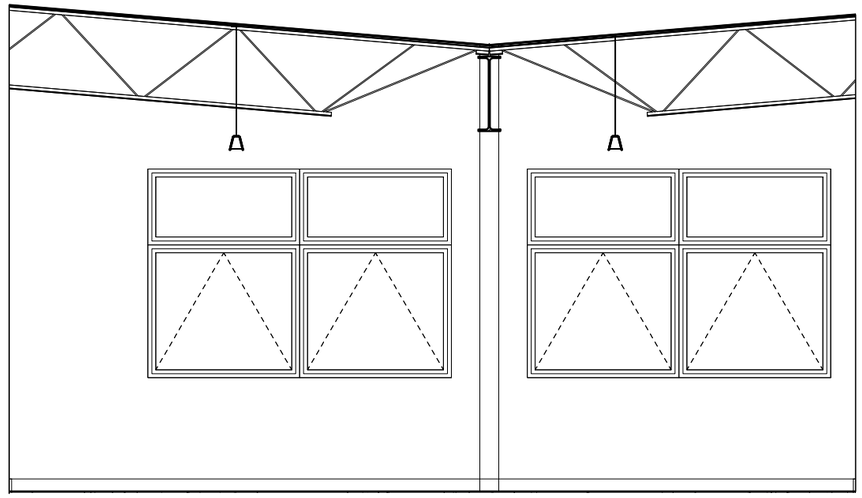

2 CLASSROOM 211

SCALE: 0 1' 2' 4'

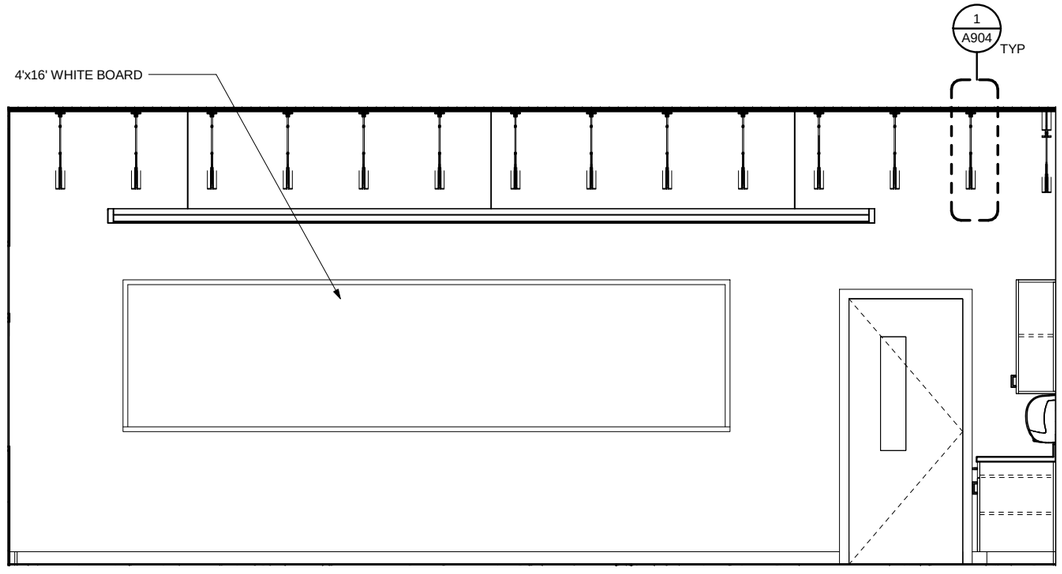

3 CLASSROOM 211

SCALE: 0 1' 2' 4'

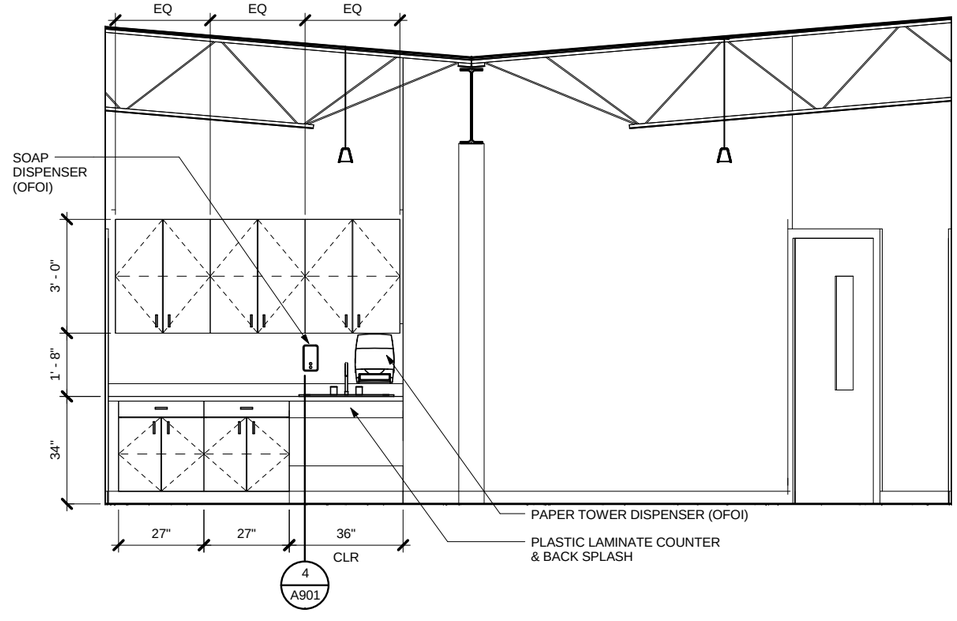

4 CLASSROOM 211

SCALE: 0 1' 2' 4'

Jensen
Yorba
Lott
Inc.

522 West 10th Street
Juneau, Alaska 99801
Phone 907-586-1070
Fax 907-586-3959
jensenyorbalott.com

STATE OF ALASKA
49TH
JOANNE LOTT
10/28/13
AR A705
REGISTERED PROFESSIONAL ARCHITECT

CITY & BOROUGH OF JUNEAU
EAGLECREST LEARNING CENTER
CBJ CONTRACT No. E014-076

REVISIONS

SHEET TITLE
INTERIOR ELEVATIONS

DATE: October 28, 2013
FILE: 13031

A506

10/28/2013 4:36:49 PM C:\Users\adeguzman\Documents\My Revit Projects\13031 - Eaglecrest Learning Center CD_adeguzman.rvt

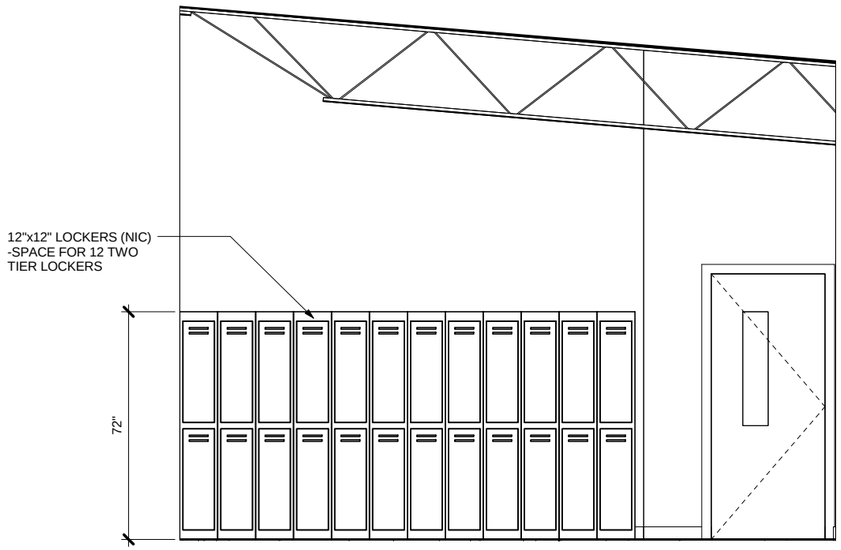

NOTE: PROVIDE 2x6 BLOCKING IN WALL @ +60" (TYP)

1 INSTRUCTORS 209

SCALE: 0 1' 2' 4'

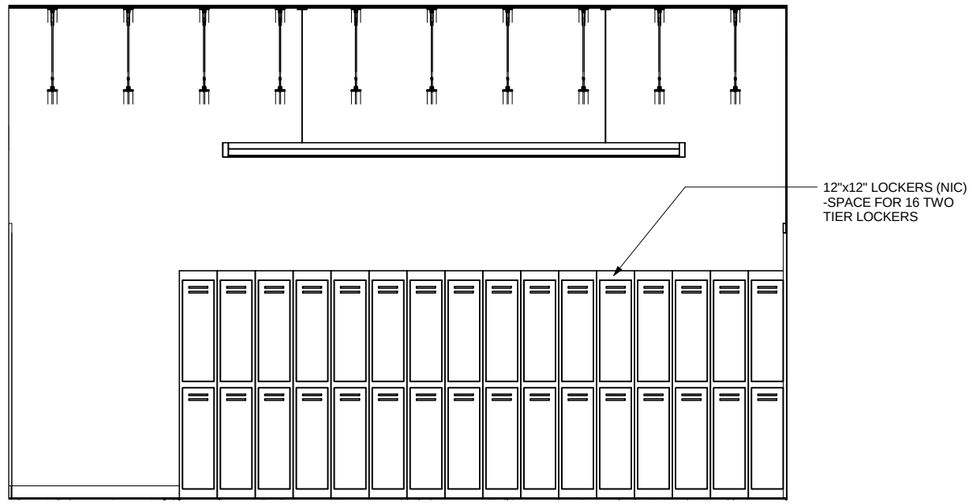

2 INSTRUCTORS 209

SCALE: 0 1' 2' 4'

Jensen Yorba Lott
Inc.
522 West 10th Street
Juneau, Alaska 99801
Phone 907-586-1070
Fax 907-586-3959
jensenyorbalott.com

STATE OF ALASKA 49TH
JOANNE LOTT
10/28/13
AK A706
REGISTERED PROFESSIONAL ARCHITECT

CITY & BOROUGH OF JUNEAU
EAGLECREST LEARNING CENTER
CBJ CONTRACT No. E014-076

REVISIONS

SHEET TITLE
INTERIOR ELEVATIONS

DATE: October 28, 2013
FILE: 13031

A507

10/28/2013 4:36:50 PM C:\Users\adeguzman\Documents\My Revit Projects\13031 - Eaglecrest Learning Center CD_adeguzman.rvt



LEGEND

ACP

GWB

OPEN TO STRUCTURE
-PAINT ALL EXPOSED ELEMENTS
(DECK, JOIST, PIPE, CONDUIT, ECT.)

GENERAL NOTE

CEILINGS ARE @ +8'-0" UON

1 **FIRST FLOOR REFLECTED CEILING PLAN**

SCALE: 0 2' 4' 8' 16'

Jensen Yorba Lott Inc.

522 West 10th Street
Juneau, Alaska 99801
Phone 907-586-1070
Fax 907-586-3959
jensenyorbalott.com

STATE OF ALASKA 49TH JOANNE E. LOTT 10/28/13 No. A 7606 REGISTERED PROFESSIONAL ARCHITECT

CITY & BOROUGH OF JUNEAU
EAGLECREST LEARNING CENTER
CBJ CONTRACT No. E014-076

REVISIONS

SHEET TITLE
FIRST FLOOR REFLECTED CEILING PLAN

DATE: October 28, 2013
FILE: 13031

A601

C:\Users\adeguzman\Documents\My Revit Projects\13031 - Eaglecrest Learning Center CD_adeguzman.rvt

10/28/2013 4:36:52 PM

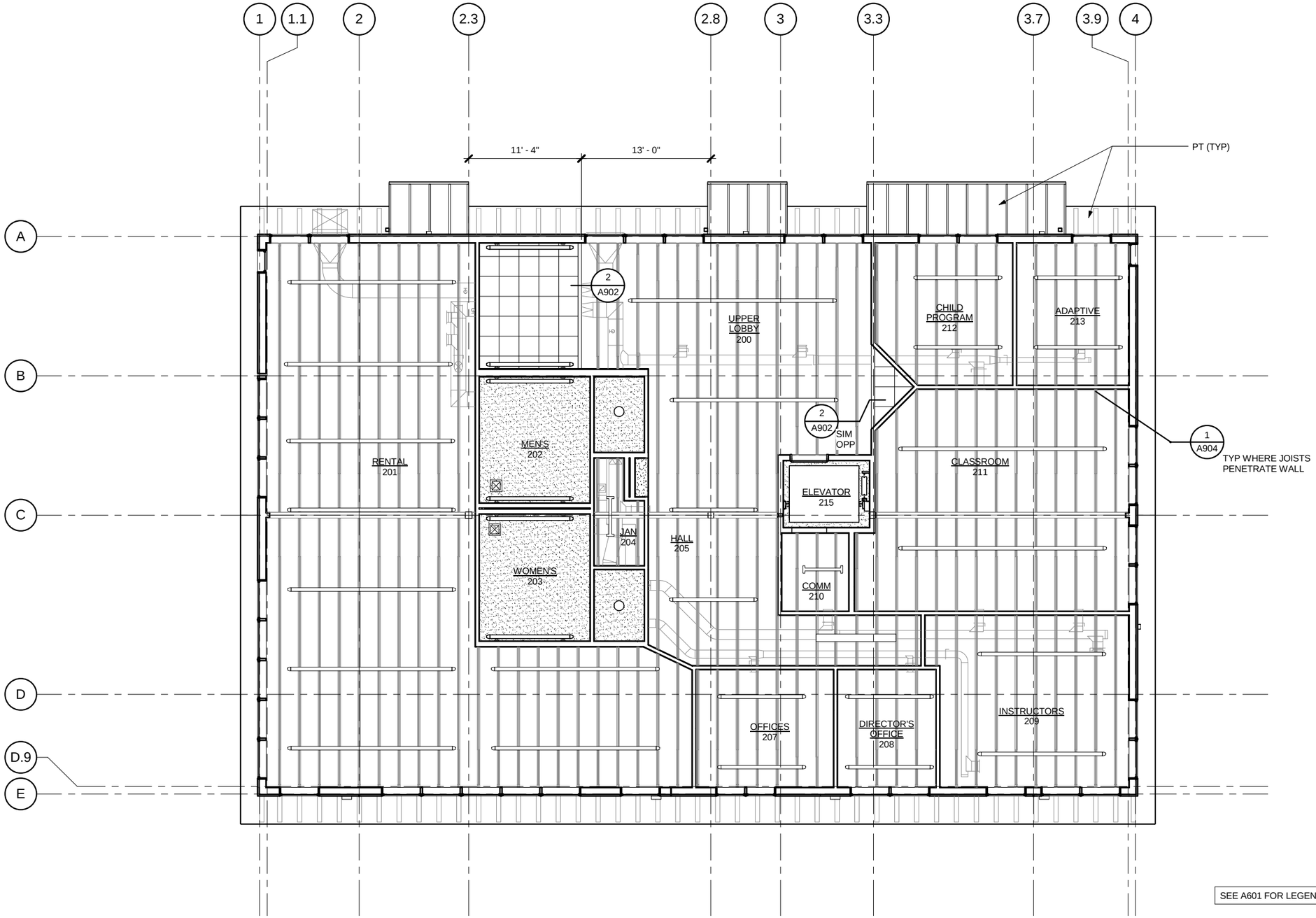

SEE A601 FOR LEGEND & GENERAL NOTES

1 SECOND FLOOR REFLECTED CEILING PLAN

SCALE: 0 2' 4' 8' 16'

Jensen Yorba Lott Inc.

522 West 10th Street
Juneau, Alaska 99801
Phone 907-586-1070
Fax 907-586-3959
jensenyorbalott.com

STATE OF ALASKA 49TH JOANNE LOTT 10/28/13 AK A705 REGISTERED PROFESSIONAL ARCHITECT

CITY & BOROUGH OF JUNEAU
EAGLECREST LEARNING CENTER
CBJ CONTRACT No. E014-076

REVISIONS

SHEET TITLE
SECOND FLOOR REFLECTED CEILING PLAN

DATE: October 28, 2013
FILE: 13031

A602

C:\Users\adeguzman\Documents\My Revit Projects\13031 - Eaglecrest Learning Center CD_adeguzman.rvt
10/28/2013 4:36:54 PM

KEY NOTES

1. 16" WIDE STL ELEV PIT LADDER
   -3/4"dia RUNGS @ 12"oc
   -EXTEND LADDER 48" ABOVE LOWER FLOOR
   ATTACH TO WALL WITH (6)WALL BRACKETS 1/4"X3"X4"X3"W
2. DRAINAGE PANELS & SHEET WATER PROOFING
   -ALL SIDES
3. WASHED ROCK
4. WATER STOP (TYP)
5. 5/8" GWB

GENERAL NOTES

CONTRACTOR VERIFY ALL DIMENSIONS w/ ELEV MFR

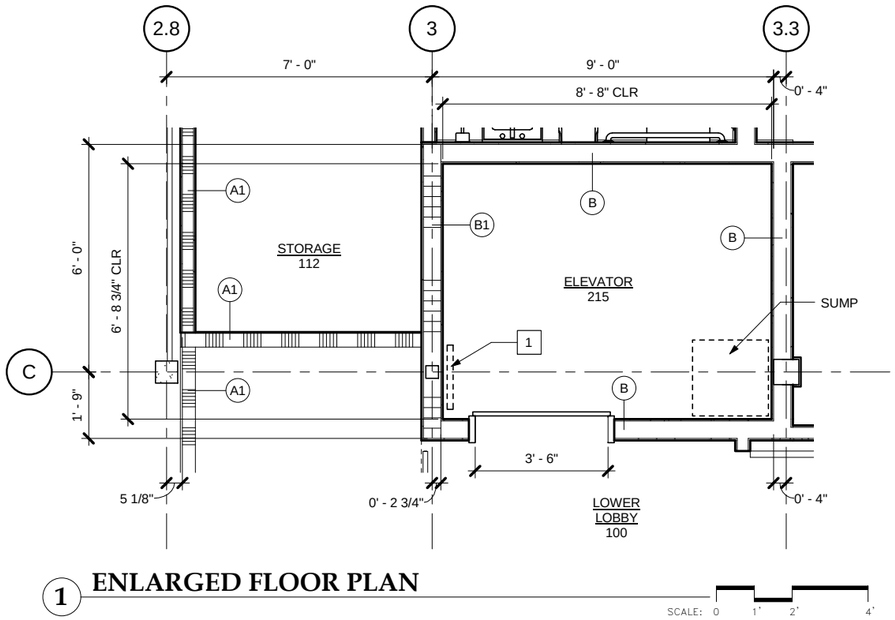

1 ENLARGED FLOOR PLAN

SCALE: 0 1' 2' 4'

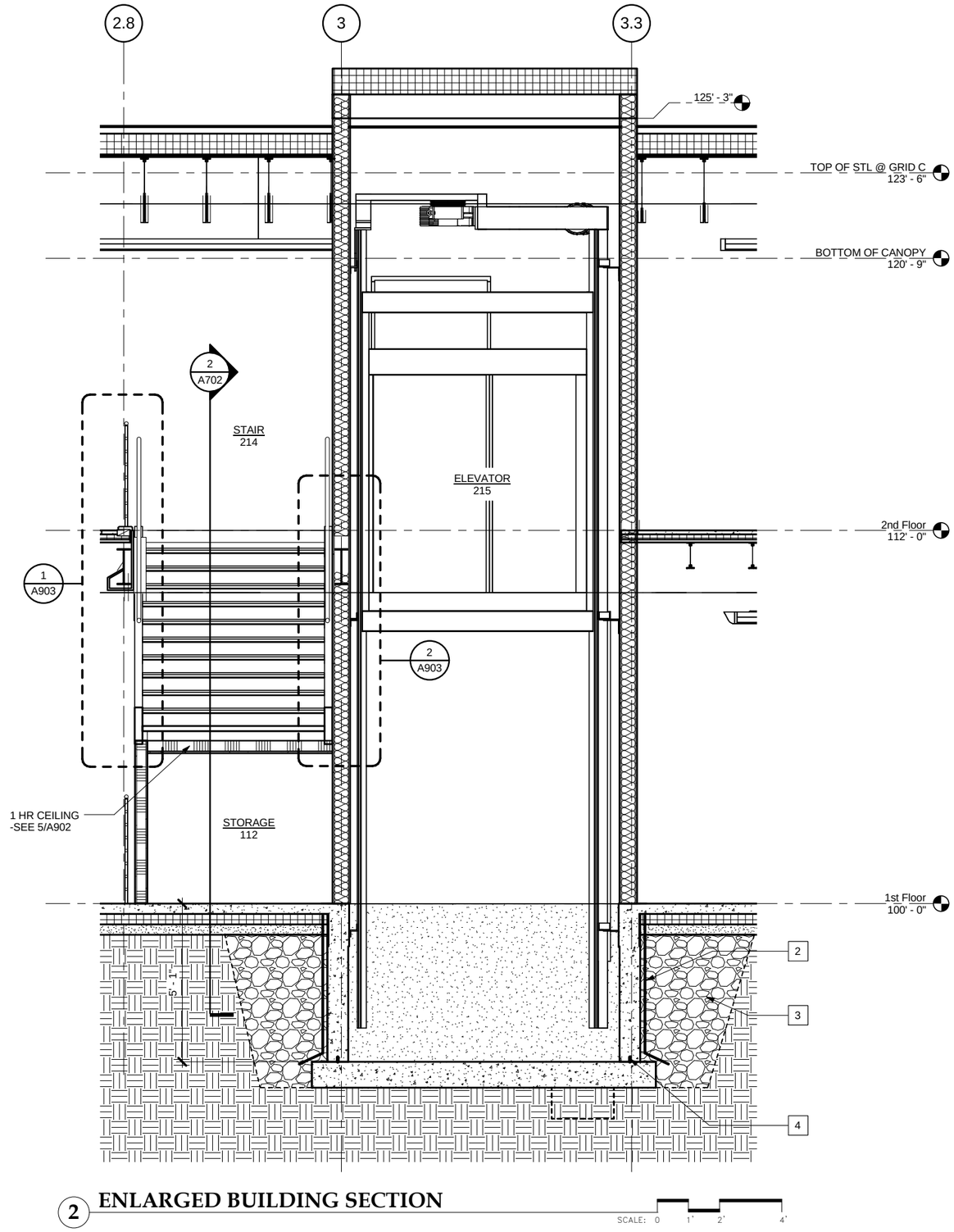

2 ENLARGED BUILDING SECTION

SCALE: 0 1' 2' 4'

Jensen Yorba Lott Inc.
522 West 10th Street
Juneau, Alaska 99801
Phone 907-586-1070
Fax 907-586-3959
jensenyorbalott.com

STATE OF ALASKA 49TH JOANNE LOTT 10/28/13 AR A705 REGISTERED PROFESSIONAL ARCHITECT

CITY & BOROUGH OF JUNEAU
EAGLECREST LEARNING CENTER
CBJ CONTRACT No. E014-076

REVISIONS

SHEET TITLE
ENLAGED FLOOR PLAN & BUILDING SECTION @ ELEVATOR

DATE: October 28, 2013
FILE: 13031

A701

10/28/2013 4:36:55 PM C:\Users\adeguzman\Documents\My Revit Projects\13031 - Eaglecrest Learning Center CD_adeguzman.rvt

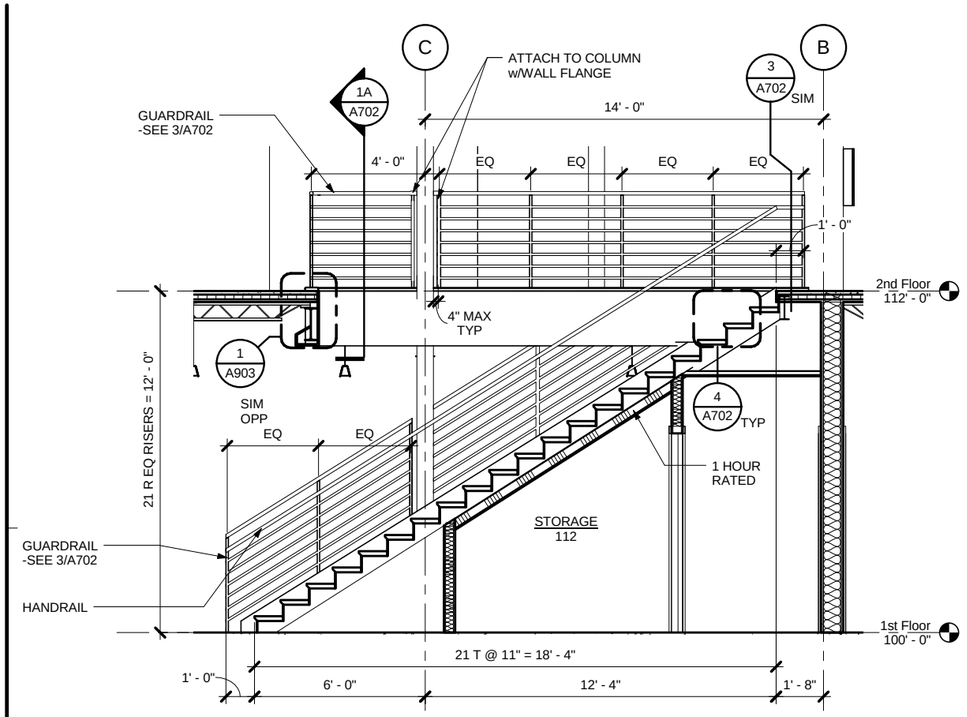

1 ENLARGED BUILDING SECTION

SCALE: 0 2" 4" 8"

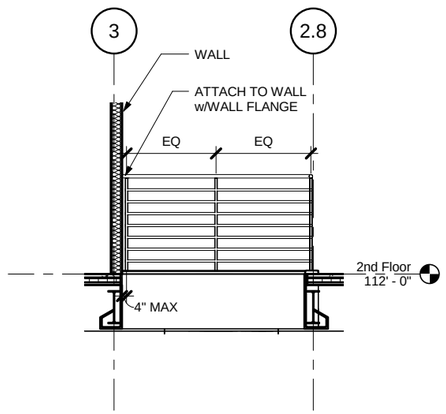

1A SECTION

SCALE: 0 2" 4" 8"

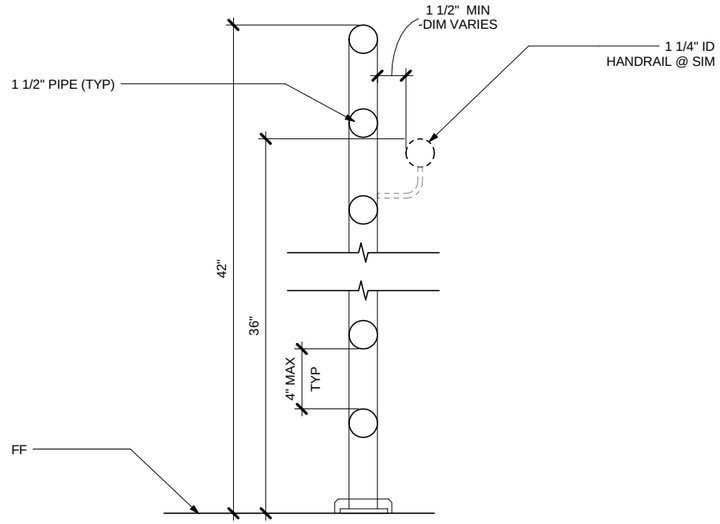

3 GUARDRAIL DETAIL

SCALE: 0 3" 6" 12"

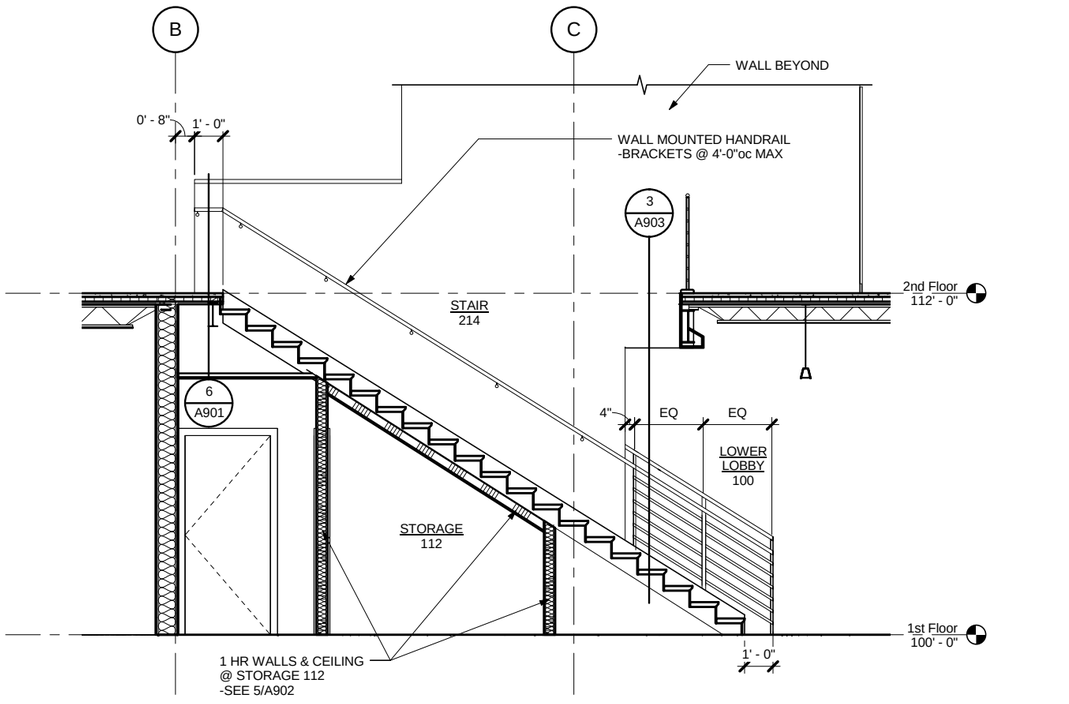

2 ENLARGED BUILDING SECTION

SCALE: 0 2" 4" 8"

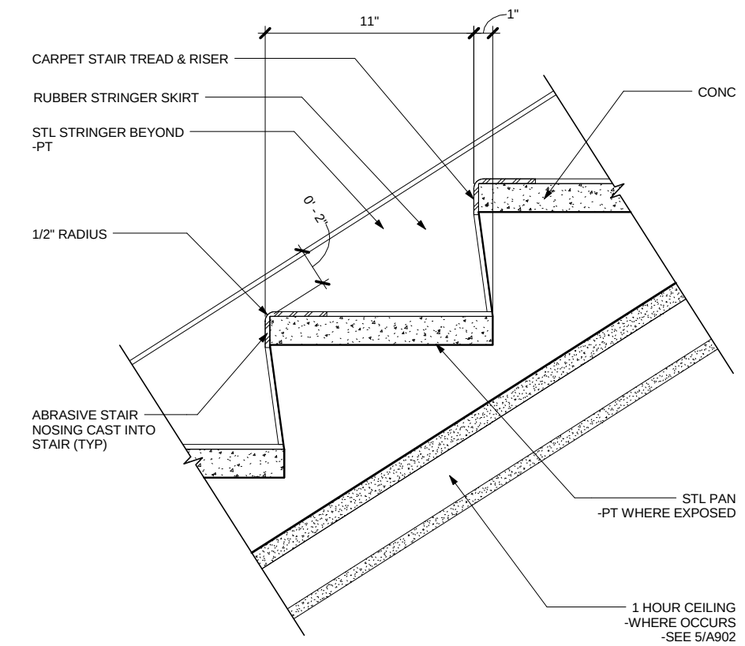

4 STAIR TREAD DETAIL

SCALE: 0 3" 6" 12"

Jensen Yorba Lott
Inc.
522 West 10th Street
Juneau, Alaska 99801
Phone 907-586-1070
Fax 907-586-3959
jensenyorbalott.com

STATE OF ALASKA
49TH
JOANNE LOTT
10/28/13
AK A706
REGISTERED PROFESSIONAL ARCHITECT

CITY & BOROUGH OF JUNEAU
EAGLECREST LEARNING CENTER
CBJ CONTRACT No. E014-076

REVISIONS

SHEET TITLE
ENLARGED BUILDING SECTION @ STAIRS

DATE: October 28, 2013
FILE: 13031

A702

10/28/2013 4:36:57 PM C:\Users\adeguzman\Documents\My Revit Projects\13031 - Eaglecrest Learning Center CD_adeguzman.rvt

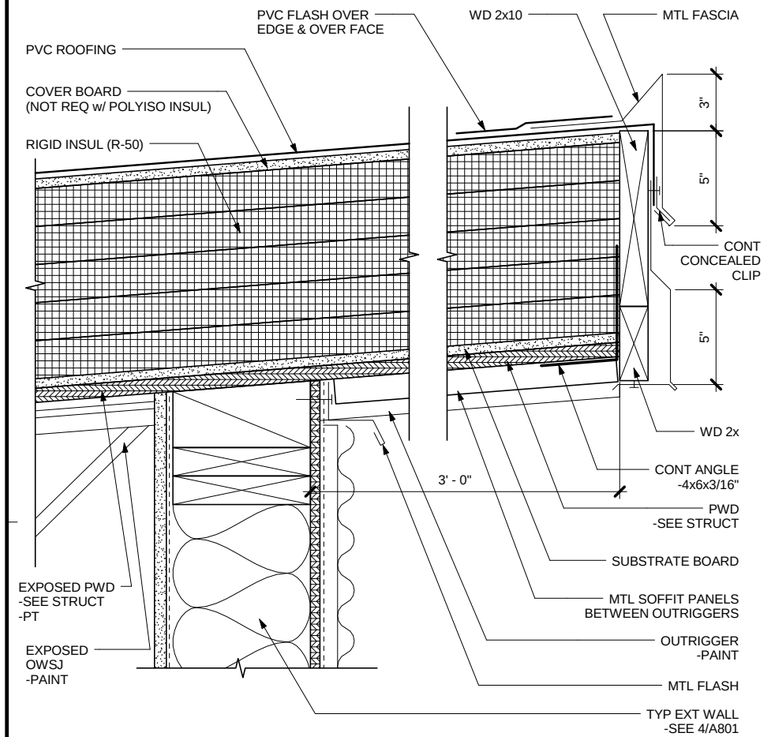

1 EAVE DETAIL

SCALE: 0 3" 6" 12"

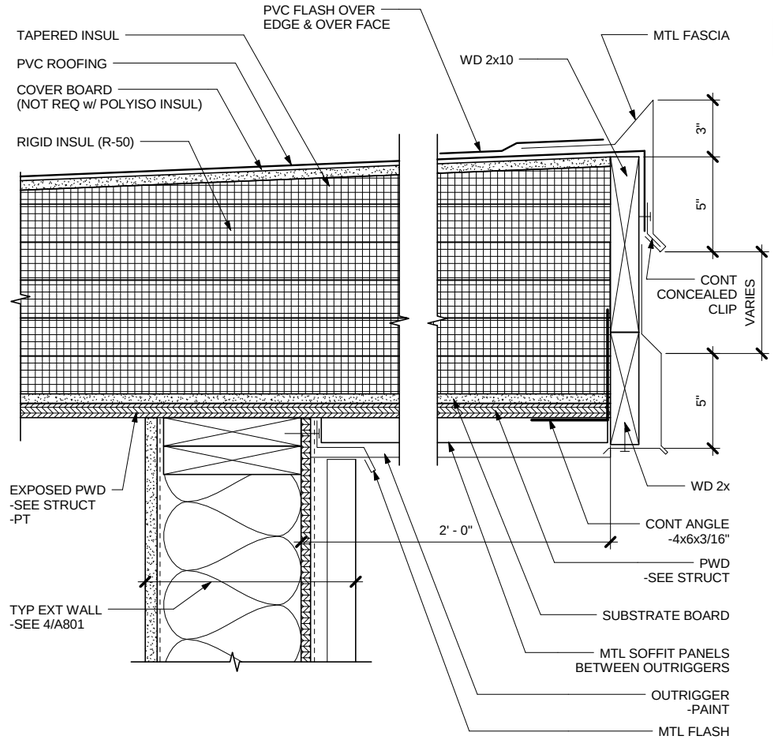

2 RAKE DETAIL

SCALE: 0 3" 6" 12"

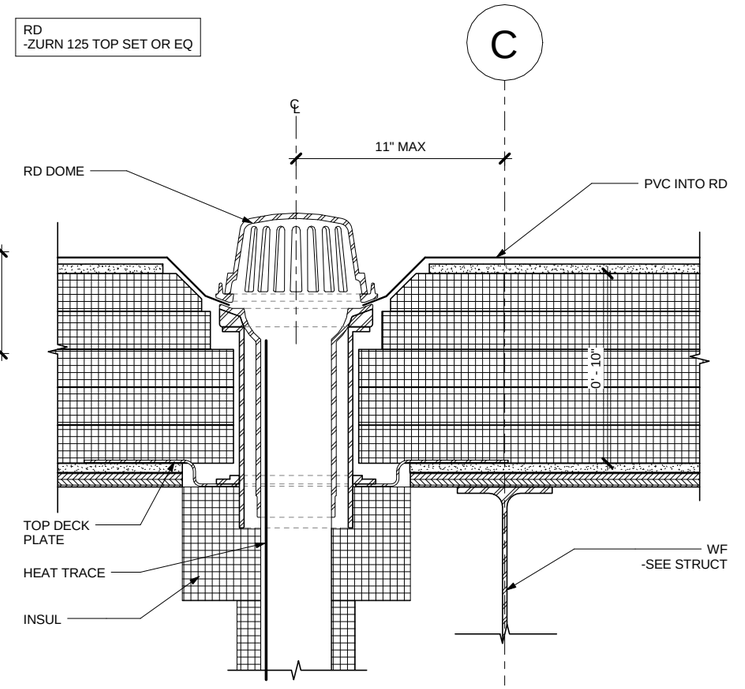

3 ROOF DRAIN

SCALE: 0 3" 6" 12"

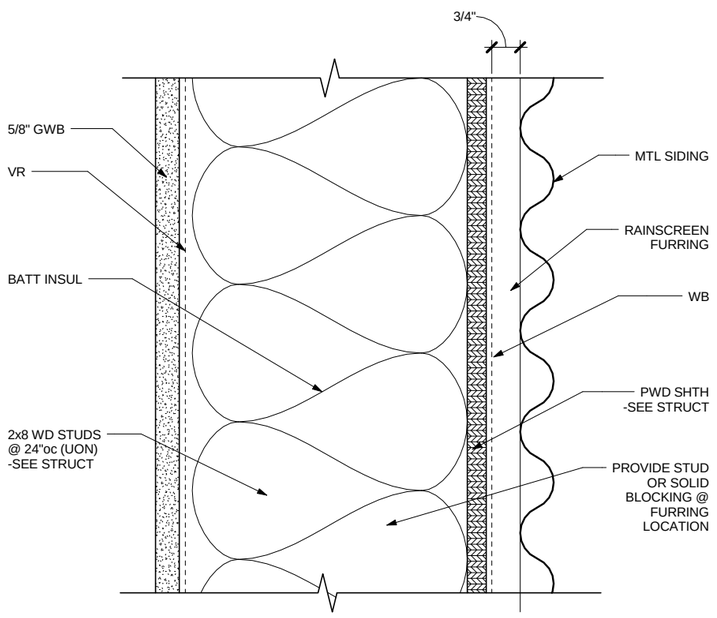

4 TYP WALL DETAIL

SCALE: 0 3" 6"

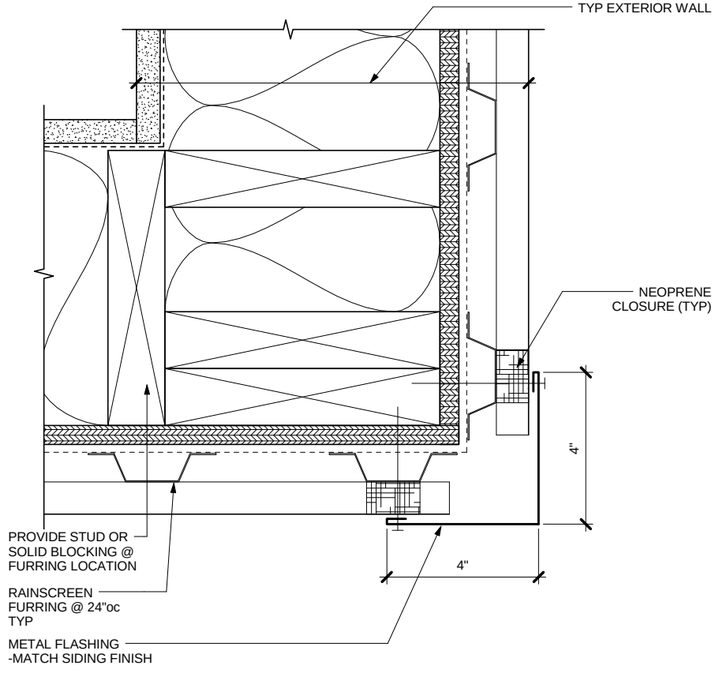

5 OUTSIDE CORNER

SCALE: 0 3" 6"

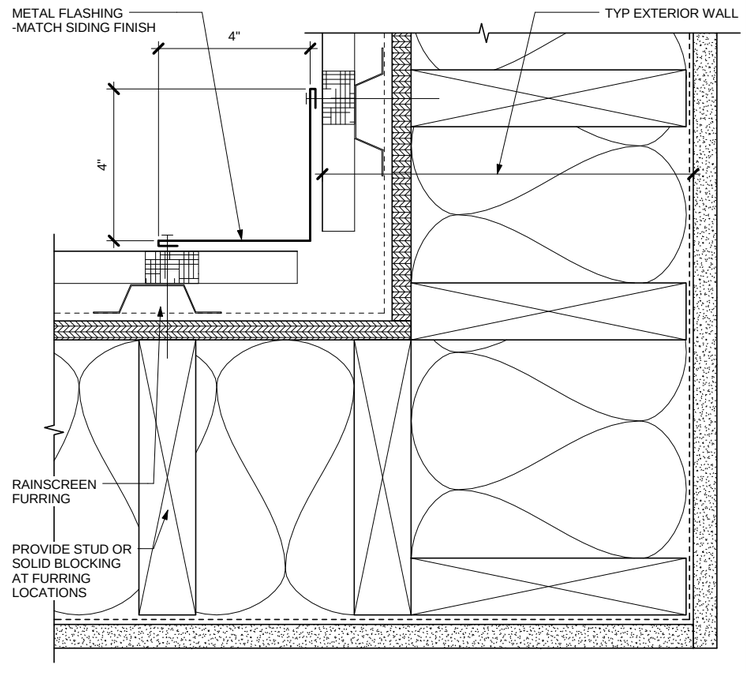

6 INSIDE CORNER

SCALE: 0 3" 6"

Jensen Yorba Lott
Inc.
522 West 10th Street
Juneau, Alaska 99801
Phone 907-586-1070
Fax 907-586-3959
jensenyorbalott.com

STATE OF ALASKA
49TH
JOANNE LOTT
10/28/13
ARCHITECT

CITY & BOROUGH OF JUNEAU
EAGLECREST LEARNING CENTER
CBJ CONTRACT No. E014-076

REVISIONS

SHEET TITLE
DETAILS

DATE: October 28, 2013
FILE: 13031

A801

C:\Users\adeguzman\Documents\My Revit Projects\13031 - Eaglecrest Learning Center CD_adeguzman.rvt
10/28/2013 4:36:59 PM

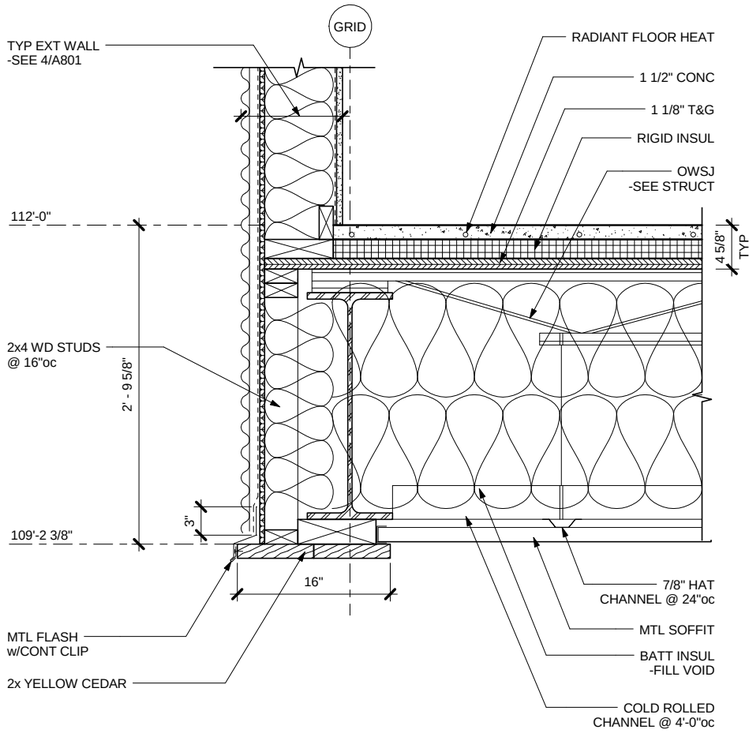

1 EDGE OF SOFFIT

SCALE: 0 6" 1' 2'

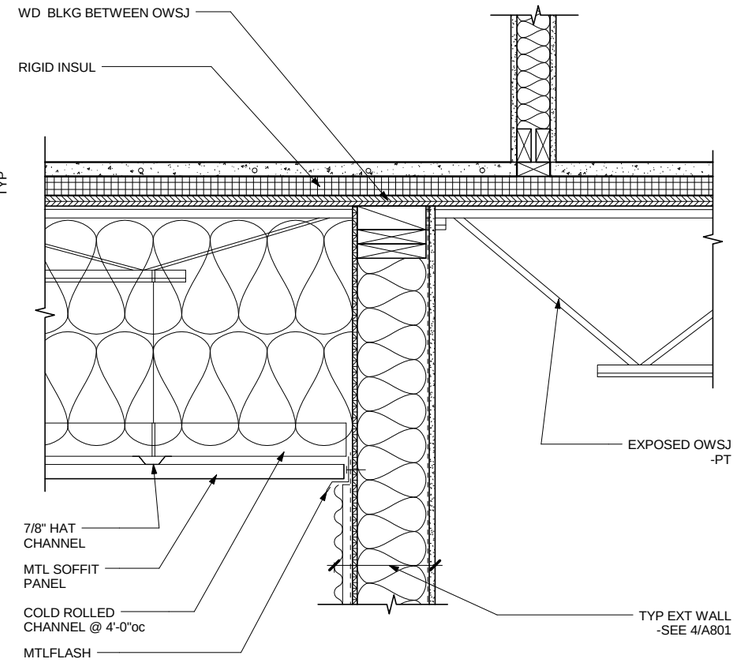

2 WALL TO SOFFIT DETAIL

SCALE: 0 6" 1' 2'

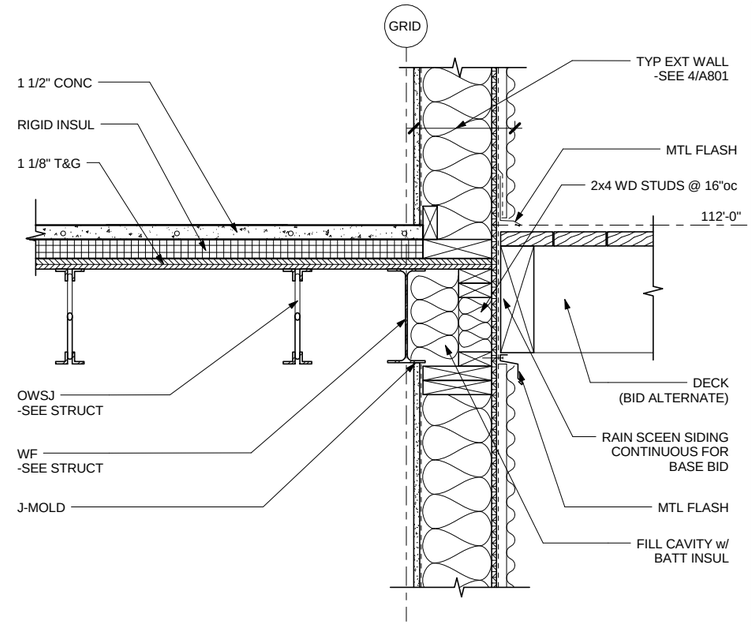

3 WALL TO SECOND FLOOR

SCALE: 0 6" 1' 2'

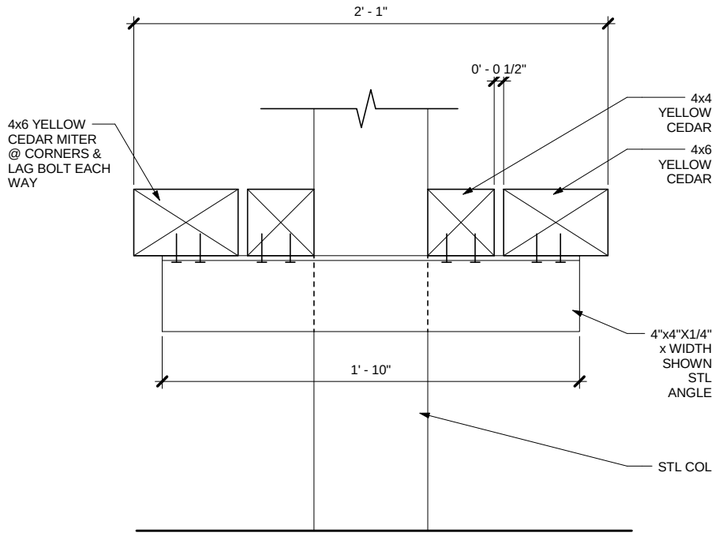

4 EXTERIOR BENCH SECTION

SCALE: 0 3" 6" 12"

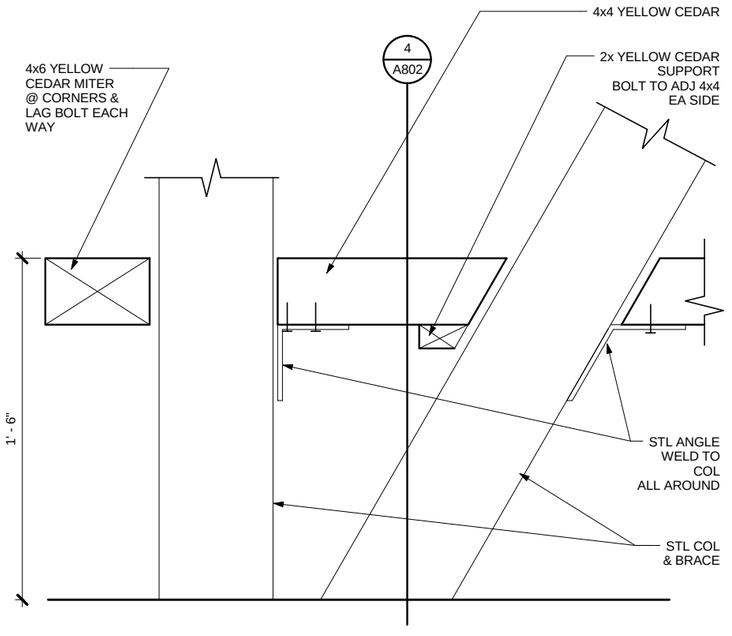

5 EXTERIOR BENCH SECTION

SCALE: 0 3" 6" 12"

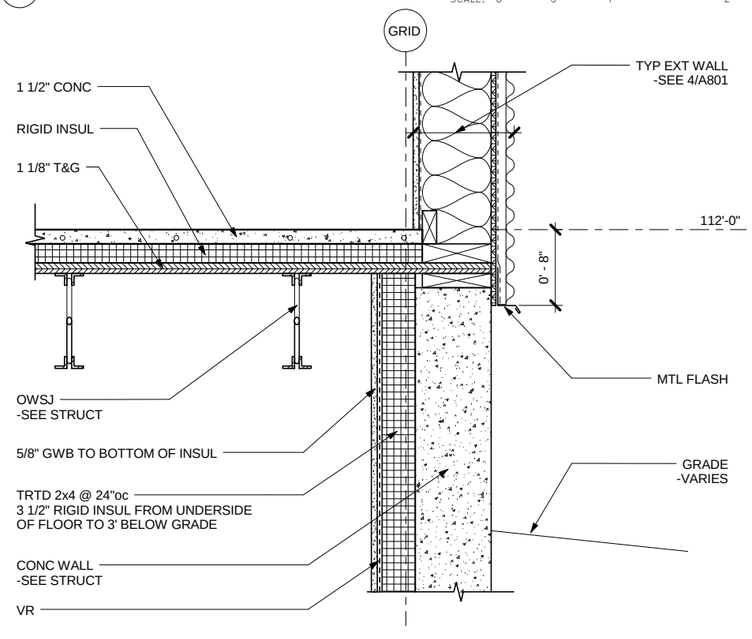

6 WALL TO SECOND FLOOR

SCALE: 0 6" 1' 2'

Jensen Yorba Lott Inc.

522 West 10th Street
Juneau, Alaska 99801
Phone 907-586-1070
Fax 907-586-3959
jensenyorbalott.com

STATE OF ALASKA 49TH
JOANNE LOTT
10/28/13
ARCHITECTURAL ASSOCIATE

CITY & BOROUGH OF JUNEAU
EAGLECREST LEARNING CENTER
CBJ CONTRACT No. E014-076

REVISIONS

SHEET TITLE
DETAILS

DATE: October 28, 2013
FILE: 13031

A802

C:\Users\adeguzman\Documents\My Revit Projects\13031 - Eaglecrest Learning Center CD_adeguzman.rvt
10/28/2013 4:37:00 PM

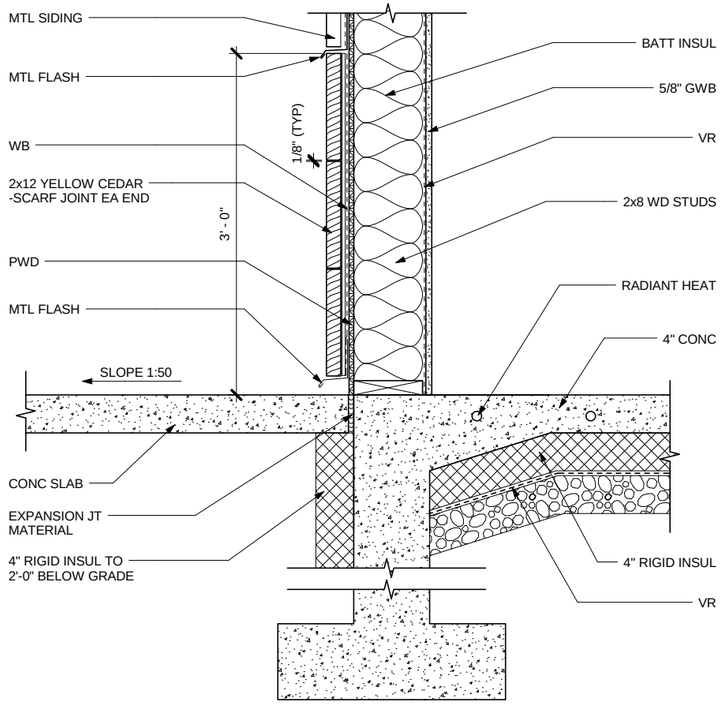

1 WALL SILL DETAIL

SCALE: 0 6" 1' 2'

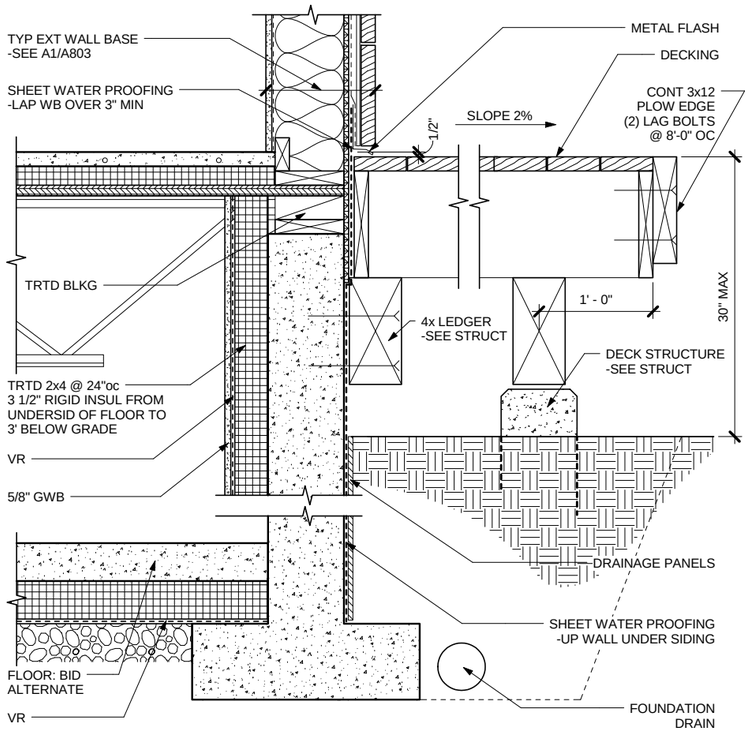

2 WALL TO DECK DETAIL

SCALE: 0 6" 1' 2'

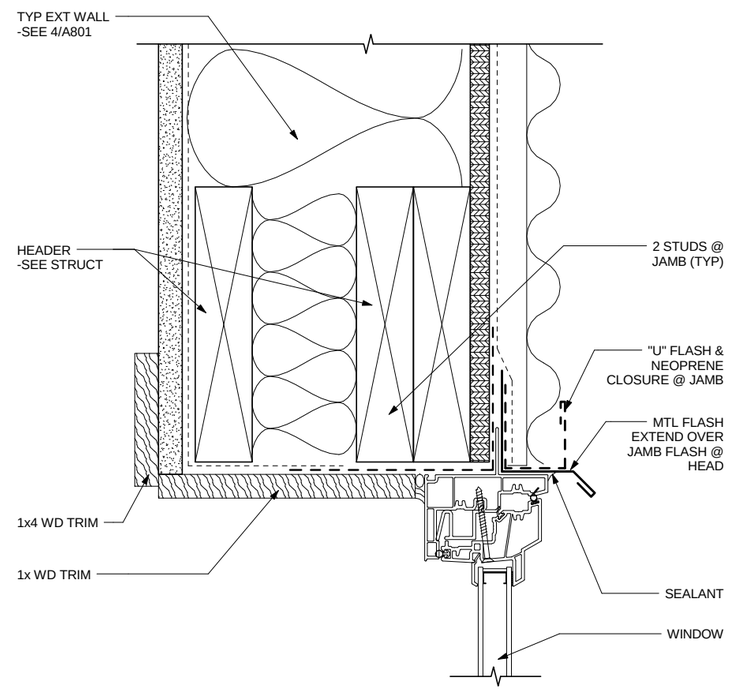

3 WINDOW HEAD (SIM @ JAMB)

SCALE: 0 3" 6"

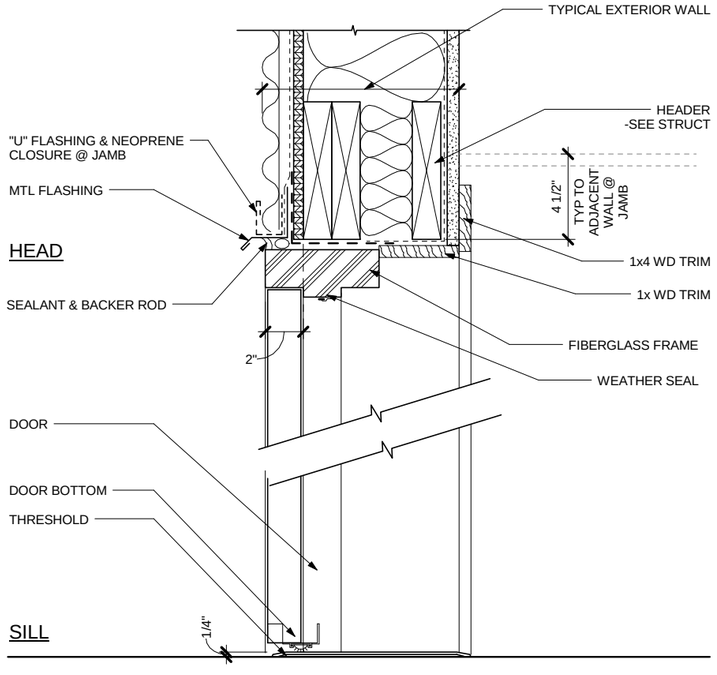

4 DOOR HEAD/SILL (JAMB SIM)

SCALE: 0 3" 6" 12"

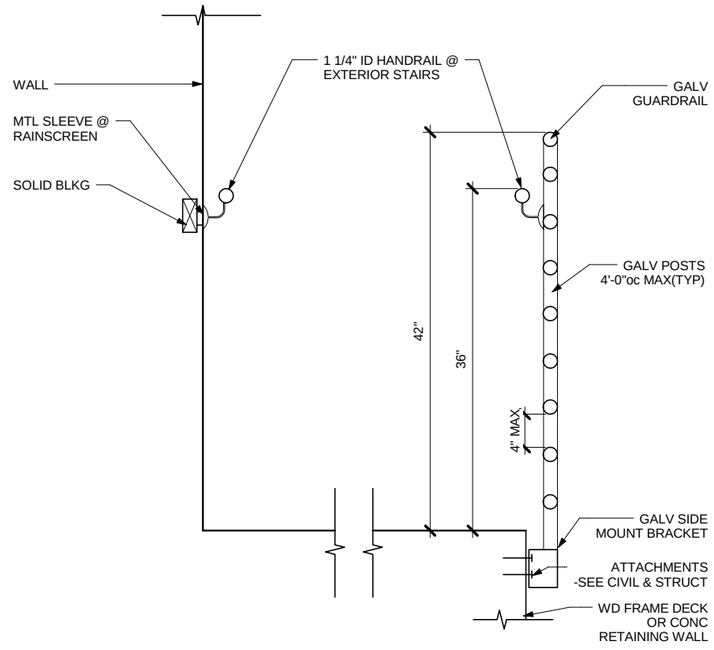

5 EXTERIOR GUARDRAIL @ RETAINING WALL & STAIR

SCALE: 0 6" 1' 2'

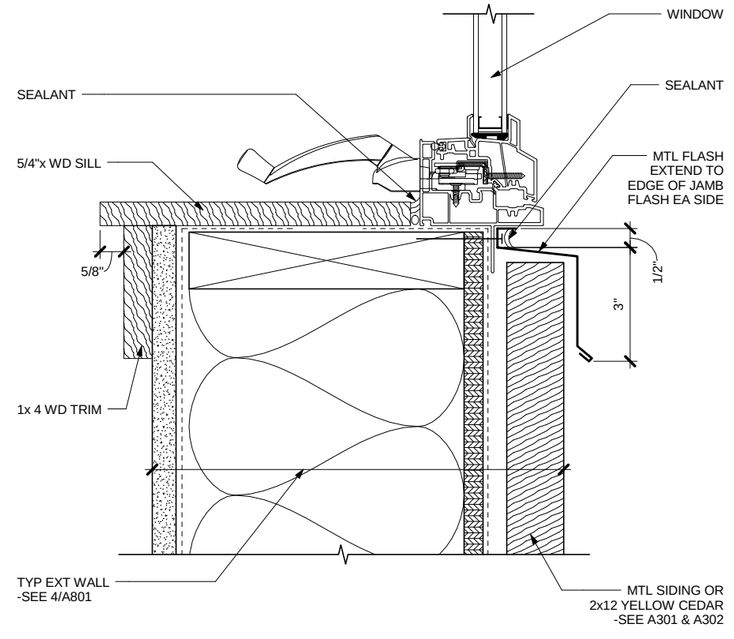

6 WINDOW SILL DETAIL

SCALE: 0 3" 6"

Jensen Yorba Lott Inc.
522 West 10th Street
Juneau, Alaska 99801
Phone 907-586-1070
Fax 907-586-3959
jensenyorbalott.com

STATE OF ALASKA 49TH JOANNE E. LOTT 10/28/13 No. A 7806 REGISTERED PROFESSIONAL ARCHITECT

CITY & BOROUGH OF JUNEAU
EAGLECREST LEARNING CENTER
CBJ CONTRACT No. E014-076

REVISIONS

SHEET TITLE
DETAILS

DATE: October 28, 2013
FILE: 13031

A803

C:\Users\adeguzman\Documents\My Revit Projects\13031 - Eaglecrest Learning Center CD_adeguzman.rvt
10/28/2013 4:37:01 PM

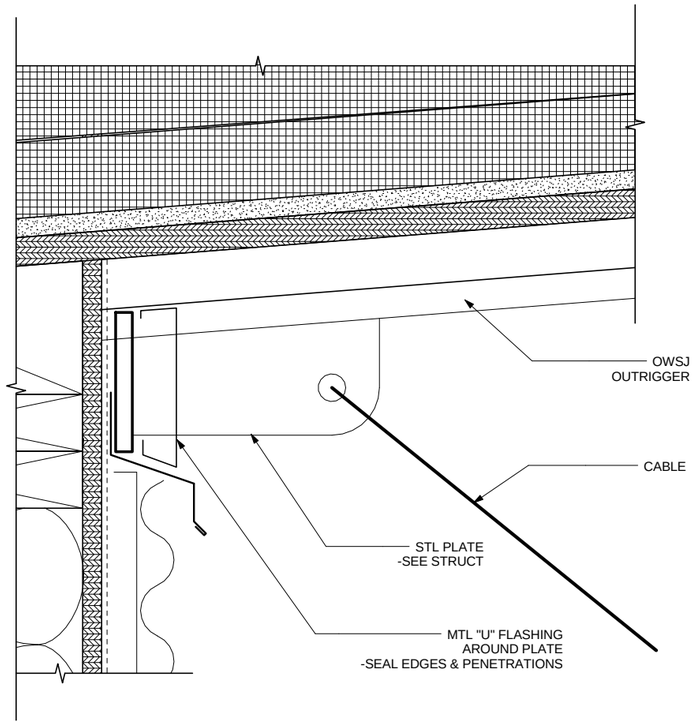

1 CANOPY SUPPORT

SCALE: 0 3" 6"

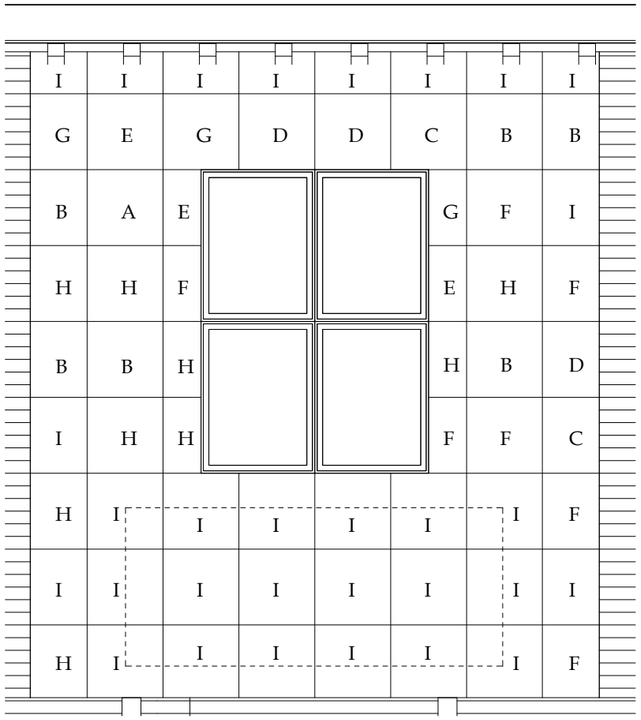

2 METAL SIDING 2 LAYOUT

SCALE: 0 1" 2" 4"

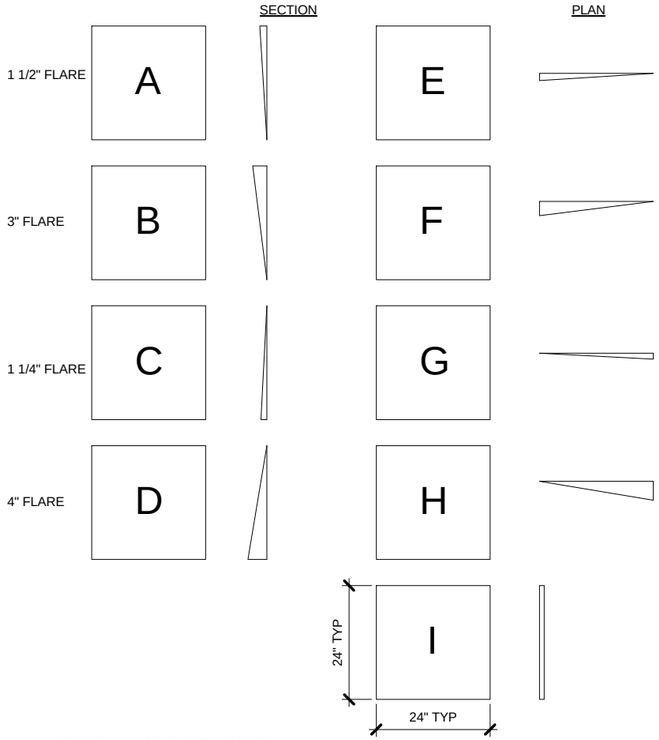

3 SIDING 2 TYPES

SCALE: 0 6" 1' 2' 4'

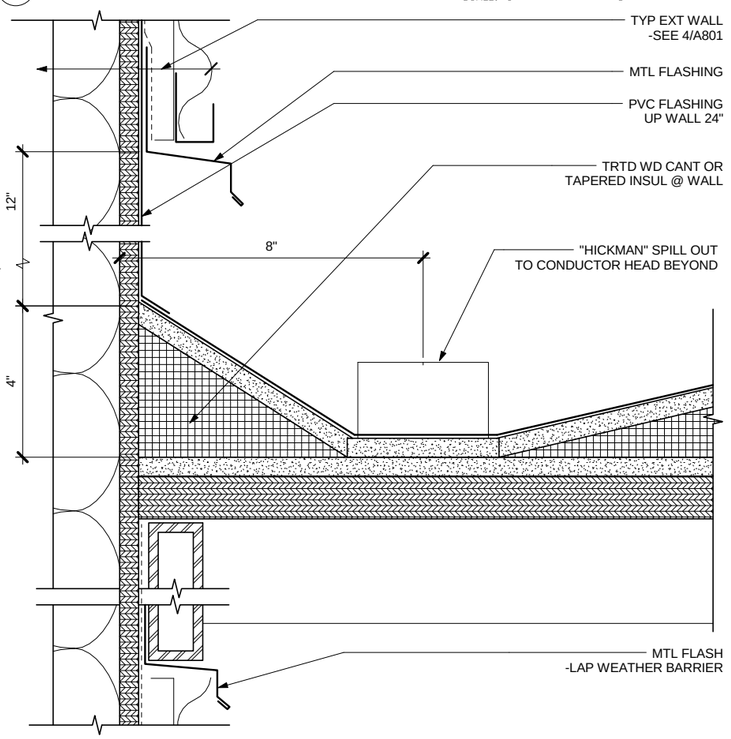

4 CANOPY TO WALL

SCALE: 0 3" 6"

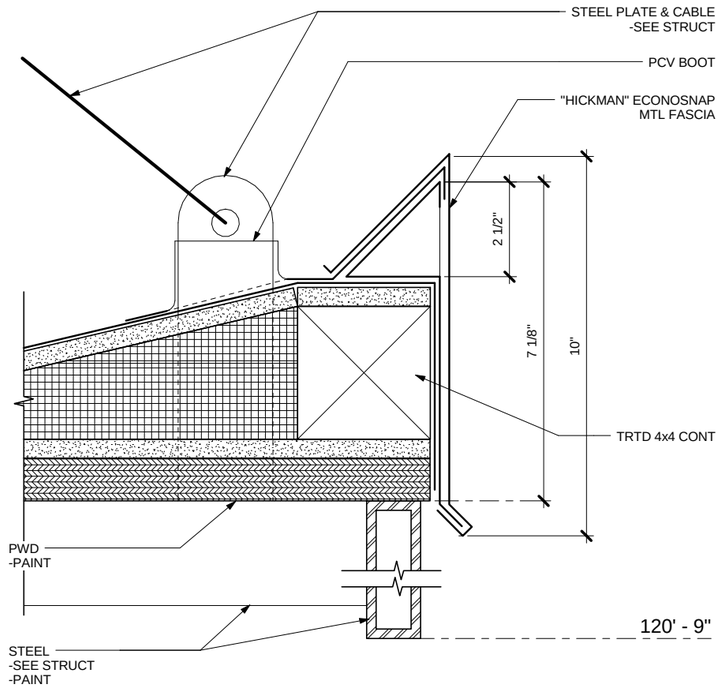

5 CANOPY EDGE

SCALE: 0 3" 6"

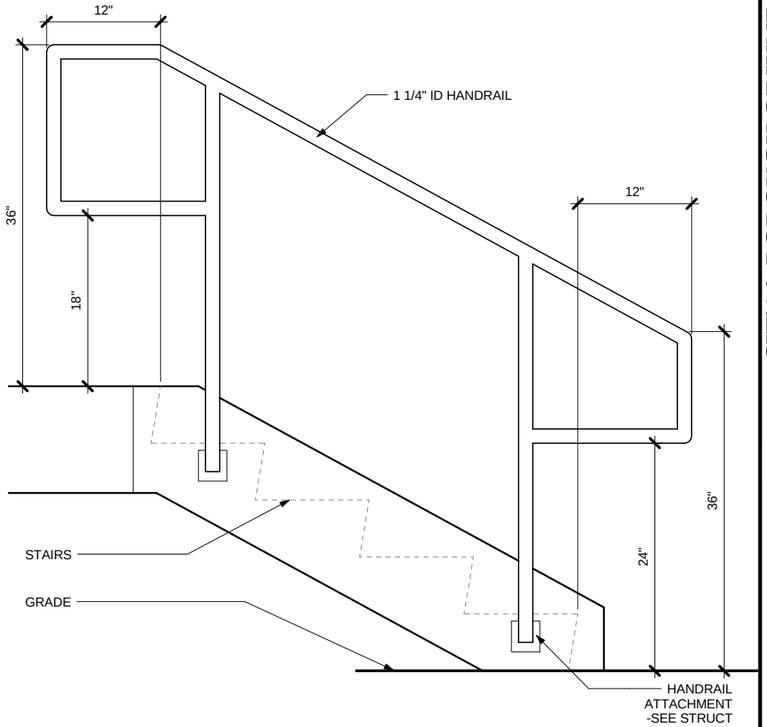

6 EXTERIOR HANDRAIL DETAIL

SCALE: 0 6" 1' 2'

Jensen Yorba Lott Inc.
522 West 10th Street
Juneau, Alaska 99801
Phone 907-586-1070
Fax 907-586-3959
jensenyorbalott.com

STATE OF ALASKA 49TH JOANNE LOTT 10/28/13 AK A706 REGISTERED PROFESSIONAL ARCHITECT

CITY & BOROUGH OF JUNEAU
EAGLECREST LEARNING CENTER
CBJ CONTRACT No. E014-076

REVISIONS

SHEET TITLE
DETAILS

DATE: October 28, 2013
FILE: 13031

A804

10/28/2013 4:37:03 PM C:\Users\adeguzman\Documents\My Revit Projects\13031 - Eaglecrest Learning Center CD_adeguzman.rvt

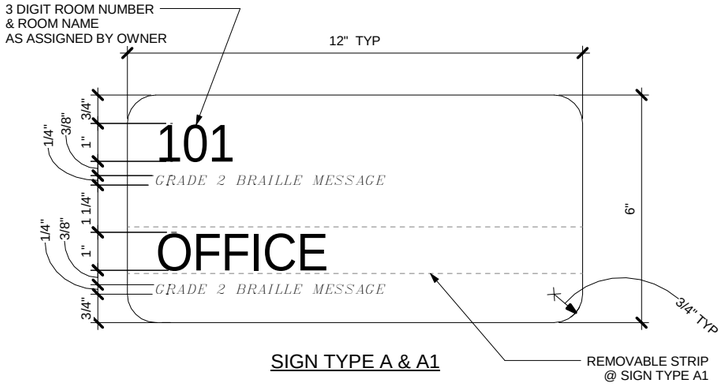

SIGN TYPE A & A1

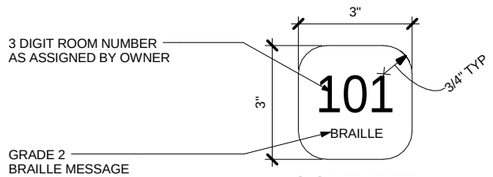

SIGN TYPE B

NOTE: VARY SIZE AS REQUIRED TO FIT MESSAGE TEXT

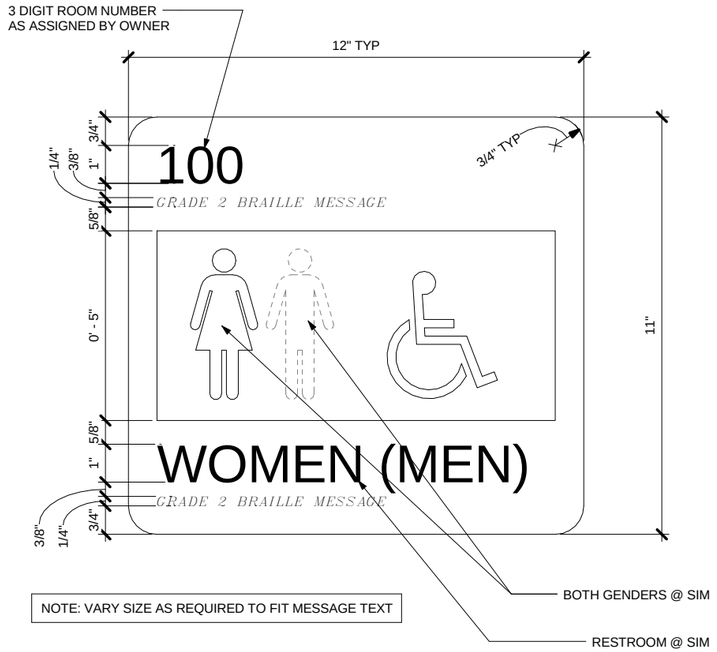

NOTE: VARY SIZE AS REQUIRED TO FIT MESSAGE TEXT

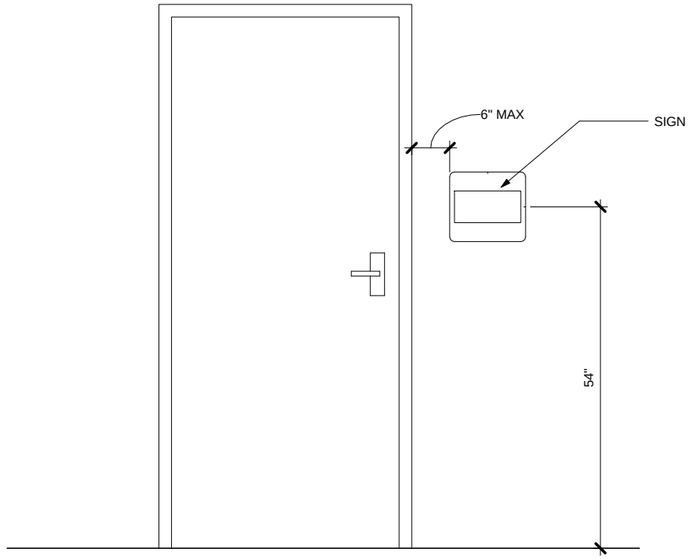

1 SIGNAGE - TYPE "A", "A1", & "B"

SCALE: 0 3" 6"

2 SIGNAGE - TYPE "C"

SCALE: 0 3" 6"

3 TYPICAL SIGNAGE MOUNTING

SCALE: 0 6" 1' 2'

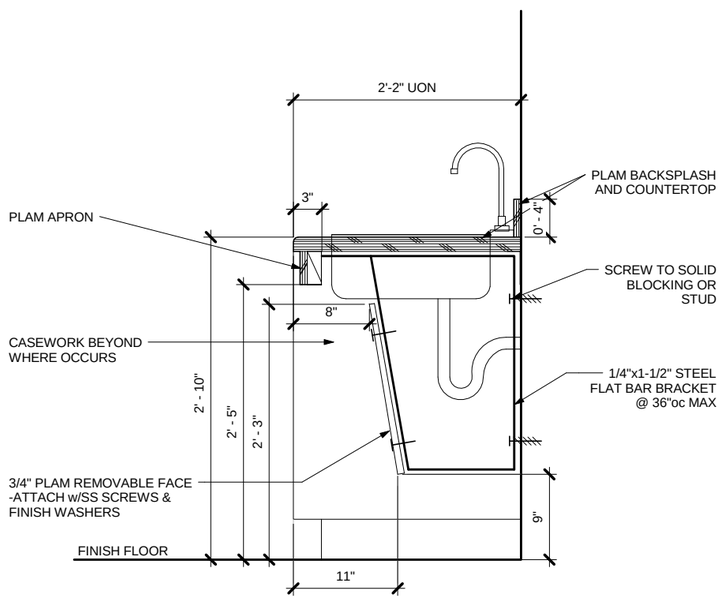

4 TYP DETAIL AT SINK

SCALE: 0 6" 1' 2'

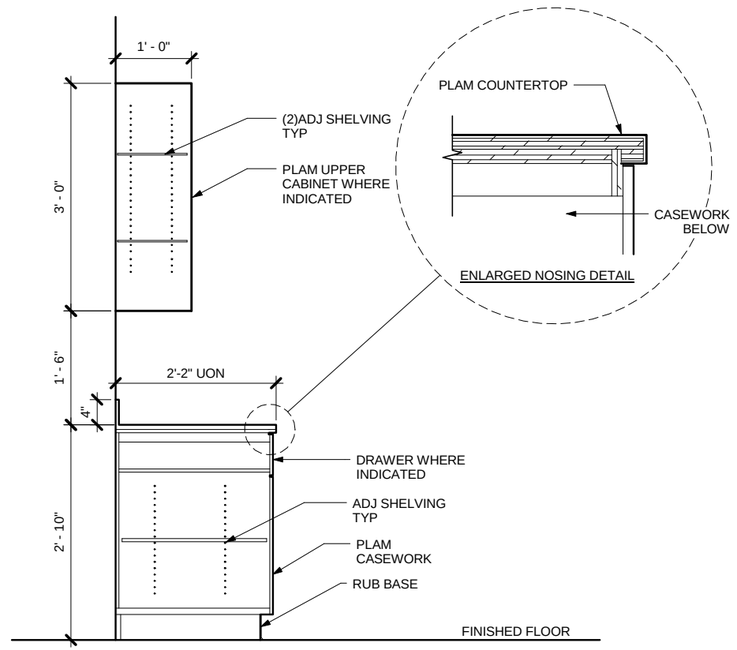

5 TYP CASEWORK

SCALE: 0 6" 1' 2'

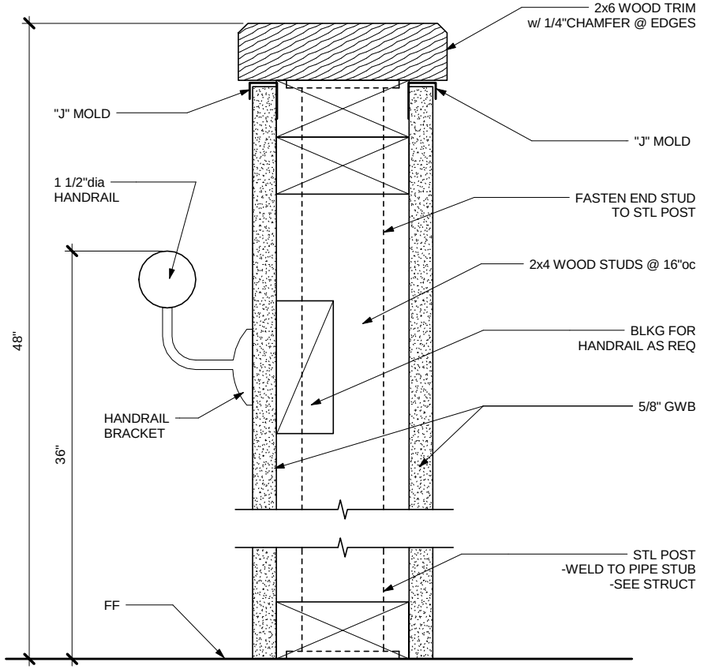

6 PONY WALL DETAIL

SCALE: 0 3" 6"

Jensen Yorba Lott Inc.
522 West 10th Street
Juneau, Alaska 99801
Phone 907-586-1070
Fax 907-586-3959
jensenyorbalott.com

STATE OF ALASKA 49TH JOANNE LOTT 10/28/13 No. A 7806 REGISTERED PROFESSIONAL ARCHITECT

CITY & BOROUGH OF JUNEAU
EAGLECREST LEARNING CENTER
CBJ CONTRACT No. E014-076

REVISIONS

SHEET TITLE
INTERIOR DETAILS

DATE: October 28, 2013
FILE: 13031

A901

C:\Users\adeguzman\Documents\My Revit Projects\13031 - Eaglecrest Learning Center CD_adeguzman.rvt
10/28/2013 4:37:04 PM

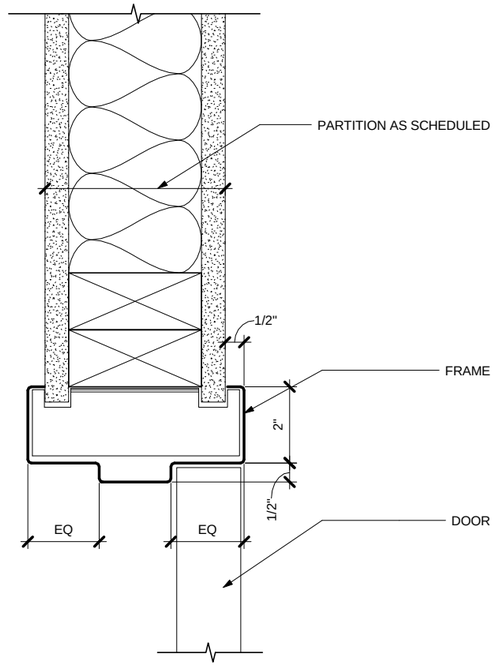

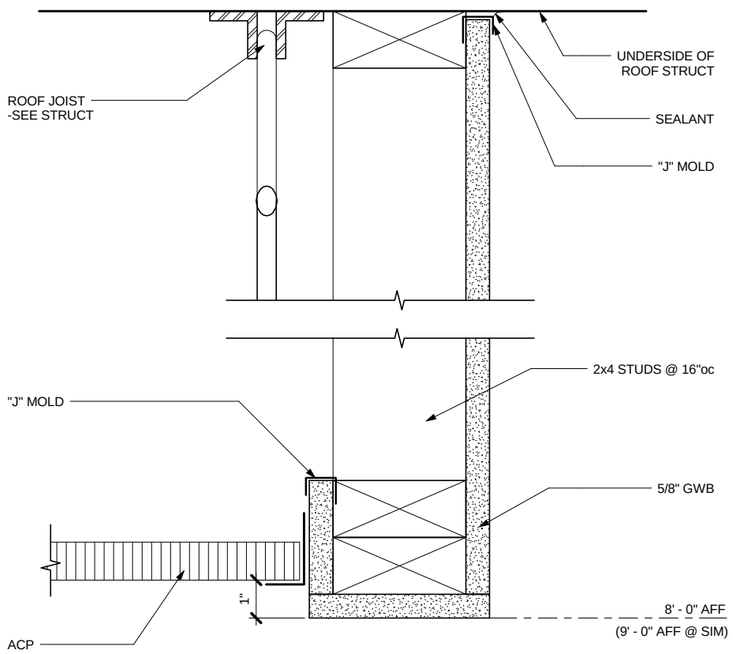

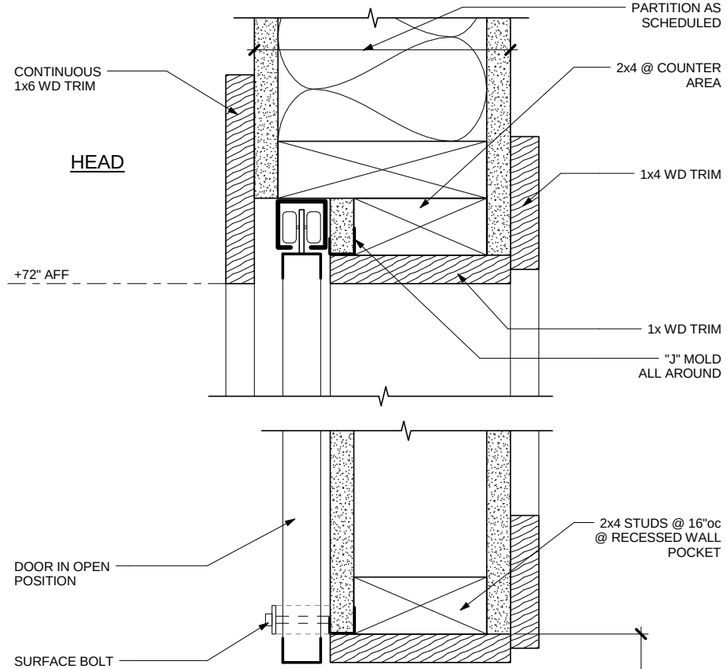

1 TYP HEAD (SIM @ JAMB)

SCALE: 0 3" 6"

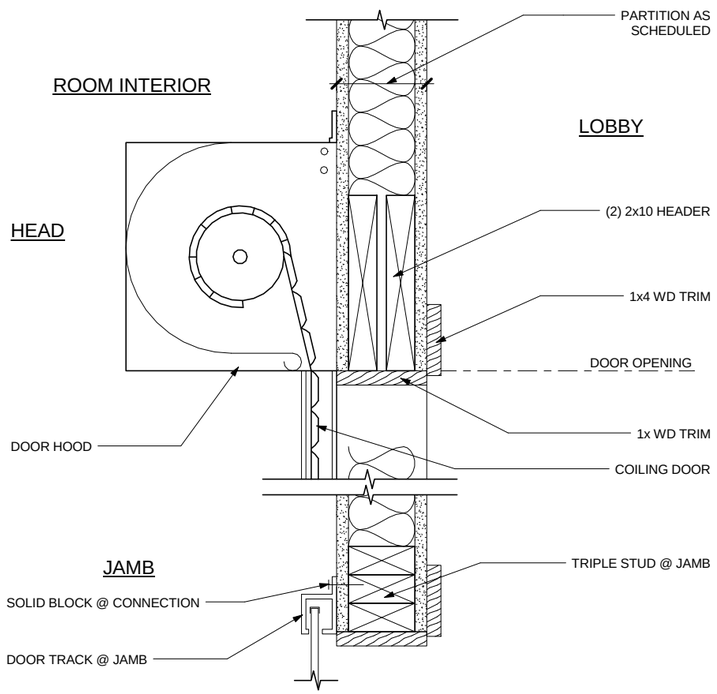

2 CEILING @ HRV DETAIL

SCALE: 0 3" 6"

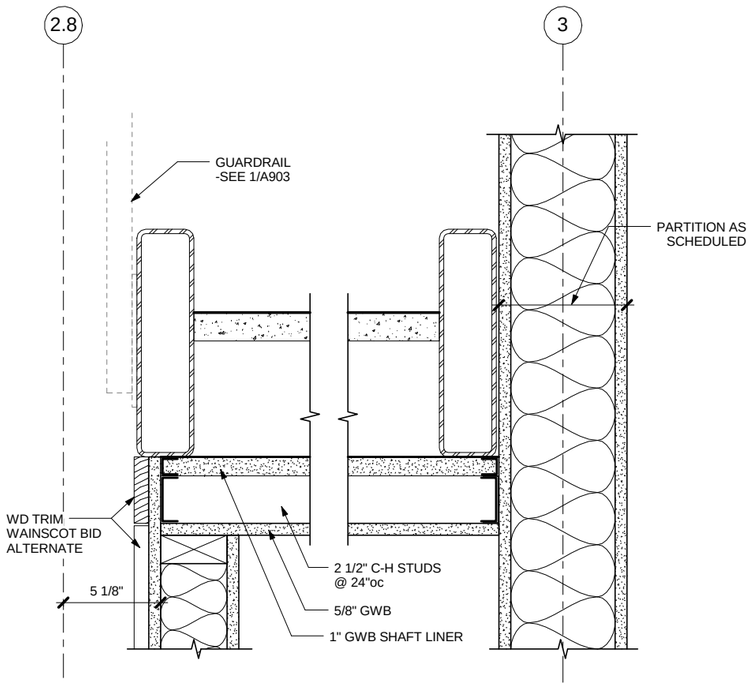

SEE A903 FOR NOTES NOT SHOWN

4 COILING DOOR HEAD / JAMB

SCALE: 0 3" 6" 12"

5 STORAGE 112 CEILING

1 HOUR GA FILE No. WP 6905

SCALE: 0 3" 6" 12"

6 COUNTER DOOR DETAIL

SCALE: 0 3" 6"

Jensen Yorba Lott Inc.

522 West 10th Street
Juneau, Alaska 99801
Phone 907-586-1070
Fax 907-586-3959
jensenyorbalott.com

STATE OF ALASKA 49TH JOANNE LOTT 10/28/13 AK A705 REGISTERED PROFESSIONAL ARCHITECT

CITY & BOROUGH OF JUNEAU
EAGLECREST LEARNING CENTER
CBJ CONTRACT No. E014-076

REVISIONS

SHEET TITLE
INTERIOR DETAILS

DATE: October 28, 2013
FILE: 13031

A902

10/28/2013 4:37:05 PM C:\Users\adeguzman\Documents\My Revit Projects\13031 - Eaglecrest Learning Center CD_adeguzman.rvt

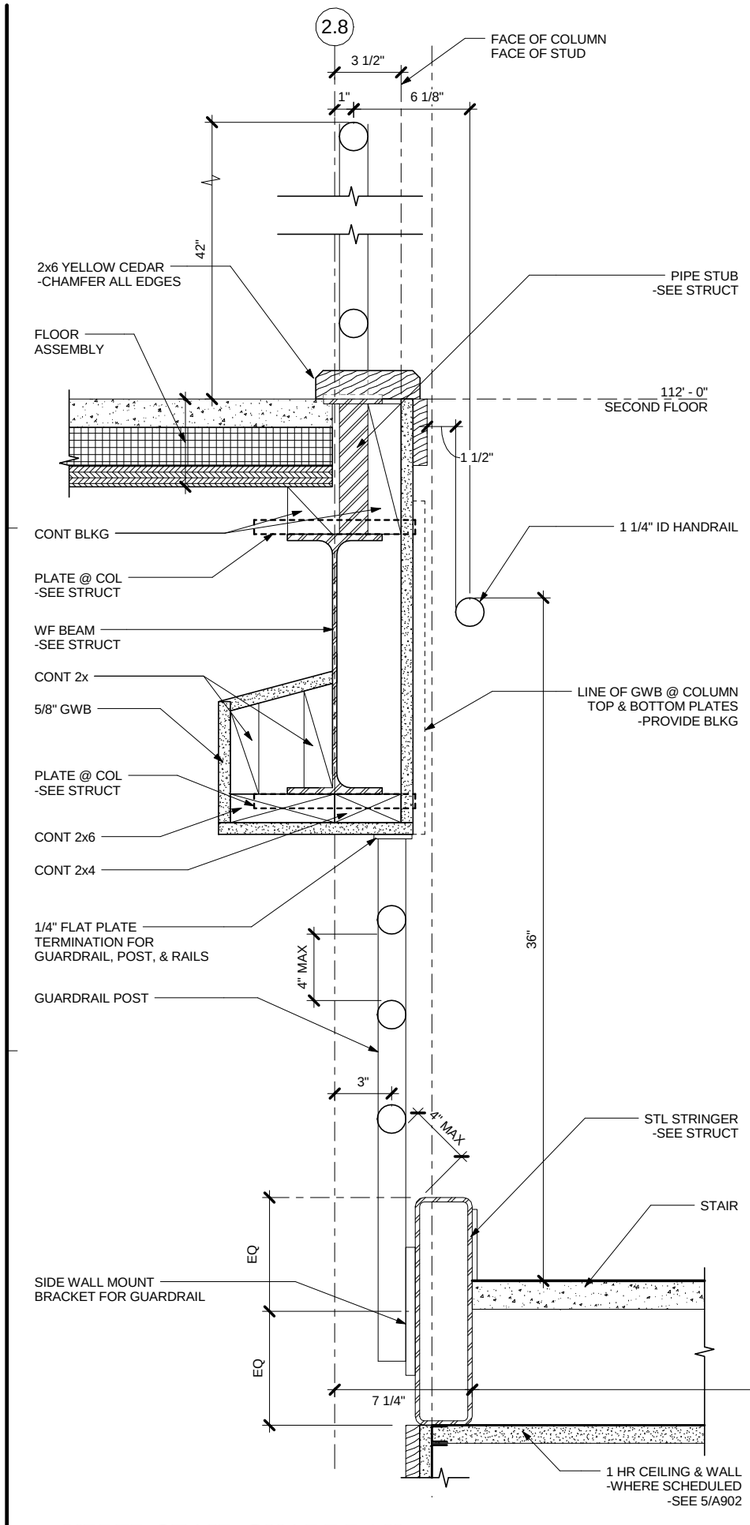

1 UPPER STAIR GUARDRAIL

SCALE: 0 3" 6" 12"

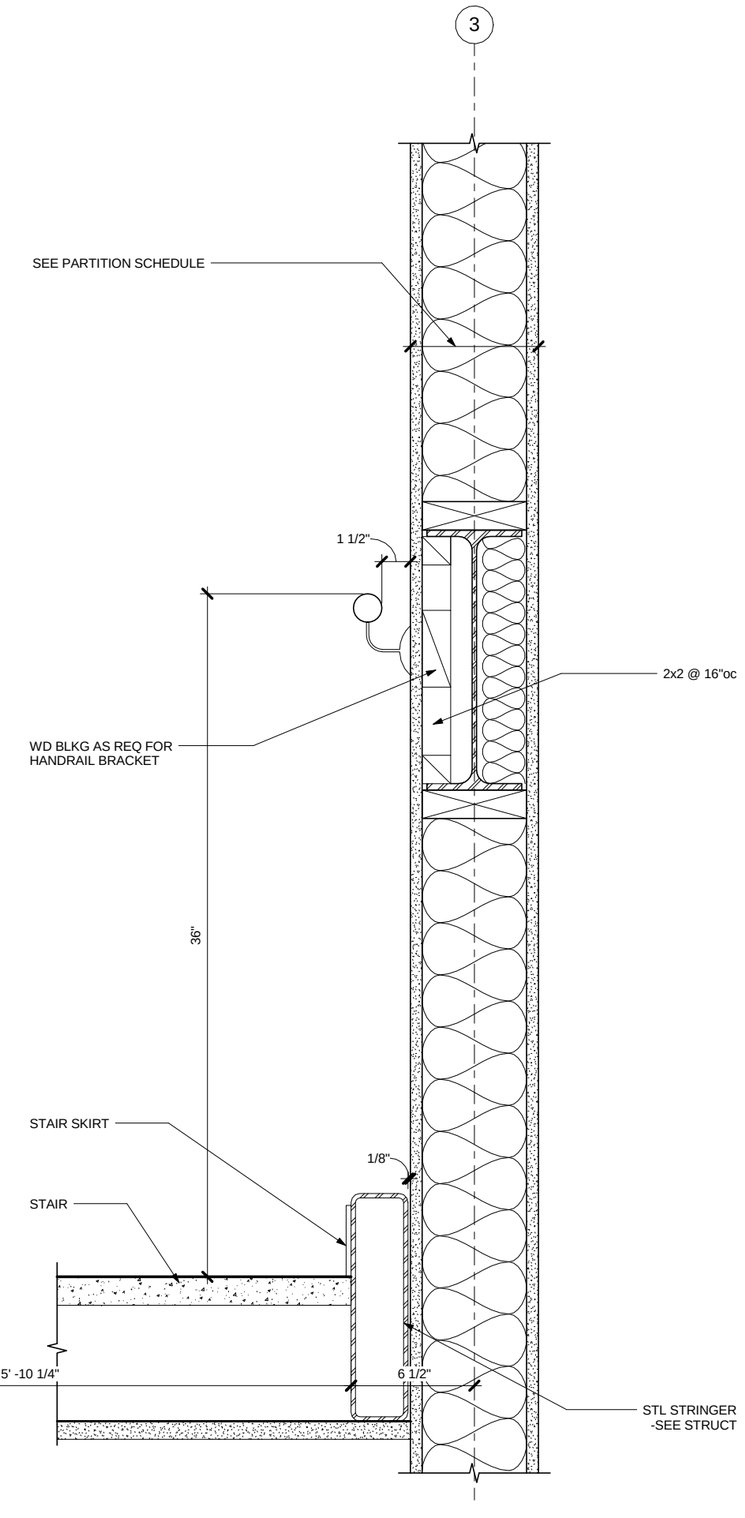

2 STAIR HANDRAIL DETAIL

SCALE: 0 3" 6" 12"

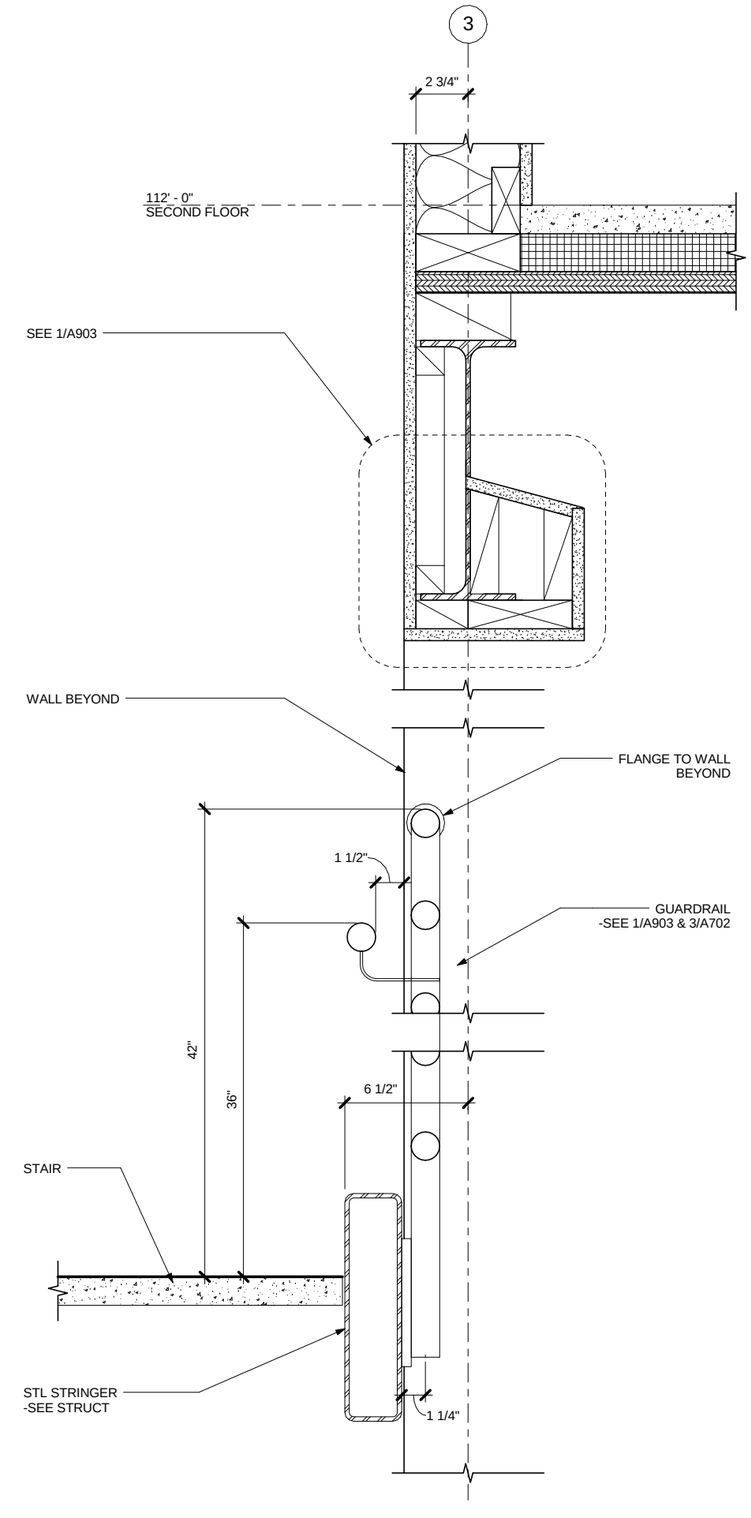

3 LOWER STAIR GUARDRAIL

SCALE: 0 3" 6" 12"

Jensen Yorba Lott
Inc.
522 West 10th Street
Juneau, Alaska 99801
Phone 907-586-1070
Fax 907-586-3959
jensenyorbalott.com

STATE OF ALASKA 49TH JOANNE LOTT 10/28/13 AR A705 REGISTERED PROFESSIONAL ARCHITECT

CITY & BOROUGH OF JUNEAU
EAGLECREST LEARNING CENTER
CBJ CONTRACT No. E014-076

REVISIONS

SHEET TITLE
INTERIOR DETAILS

DATE: October 28, 2013
FILE: 13031

A903

C:\Users\sladeguzman\Documents\My Revit Projects\13031 - Eaglecrest Learning Center CD_adeguzman.rvt
10/28/2013 4:37:06 PM

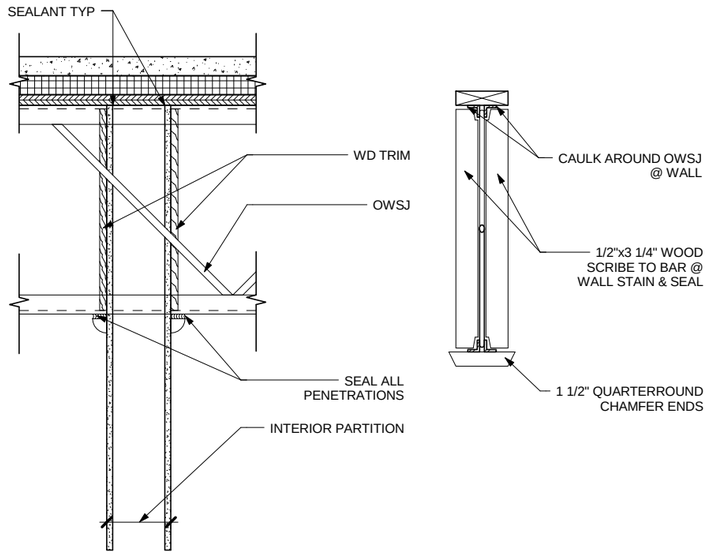

1 **TRIM @ OWSJ & WALL**

SCALE: 0 6" 1' 2'

Jensen Yorba Lott Inc.
522 West 10th Street
Juneau, Alaska 99801
Phone 907-586-1070
Fax 907-586-3959
jensenyorbalott.com

STATE OF ALASKA 49TH JOANNE E. LOTT 10/28/13 No. A 7806 REGISTERED PROFESSIONAL ARCHITECT

CITY & BOROUGH OF JUNEAU
EAGLECREST LEARNING CENTER
CBJ CONTRACT No. E014-076

REVISIONS

SHEET TITLE
INTERIOR DETAIL

DATE: October 28, 2013
FILE: 13031

A904

C:\Users\adeguzman\Documents\My Revit Projects\13031 - Eaglecrest Learning Center CD_adeguzman.rvt
10/28/2013 4:37:07 PM