INDEX

DESCRIPTION	SHEET NO.
COVER SHEET	1 OF 18
LEGEND, ABBREVIATIONS, AND GENERAL NOTES	2 OF 18
SIGN ASSEMBLY TABLE, CATCH BASIN FRAME AND GRATE TABLE, AND TRAFFIC CONTROL NOTES	3 OF 18
TYPICAL SECTIONS	4 OF 18
TYPICAL SECTIONS	5 OF 18
WATER VAULT DETAILS	6 OF 18
DRAINAGE BASIN DETAILS	7 OF 18
PIONEER AVENUE HORIZONTAL AND VERTICAL CONTROL CURB AND GUTTER LAYOUT AND GRADES B.O.P. TO STA "P" 23+00	8 OF 18
PIONEER AVENUE HORIZONTAL AND VERTICAL CONTROL CURB AND GUTTER LAYOUT AND GRADES STA "P" 23+00 TO STA "P" 26+00	9 OF 18
PIONEER AVENUE HORIZONTAL AND VERTICAL CONTROL CURB AND GUTTER LAYOUT AND GRADES STA "P" 26+00 TO STA "P" 29+00	10 OF 18
PIONEER AVENUE HORIZONTAL AND VERTICAL CONTROL CURB AND GUTTER LAYOUT AND GRADES STA "P" 29+00 TO BLUEBERRY HILLS ROAD	11 OF 18
PLAN – PIONEER AVENUE B.O.P. TO STA "P" 23+00	12 OF 18
PLAN – PIONEER AVENUE STA "P" 23+00 TO STA "P" 26+00	13 OF 18
PLAN – PIONEER AVENUE STA "P" 26+00 TO STA "P" 29+00	14 OF 18
PLAN – PIONEER AVENUE STA "P" 29+00 TO BLUEBERRY HILLS ROAD	15 OF 18
PROFILE – PIONEER AVENUE B.O.P. TO STA "P" 26+35	16 OF 18
PROFILE – PIONEER AVENUE STA "P" 26+35 TO BLUEBERRY HILLS ROAD	17 OF 18
PROFILE – BLUEBERRY HILLS ROAD	18 OF 18

PIONEER AVENUE RECONSTRUCTION, PHASE III

CONTRACT NO. E14-022

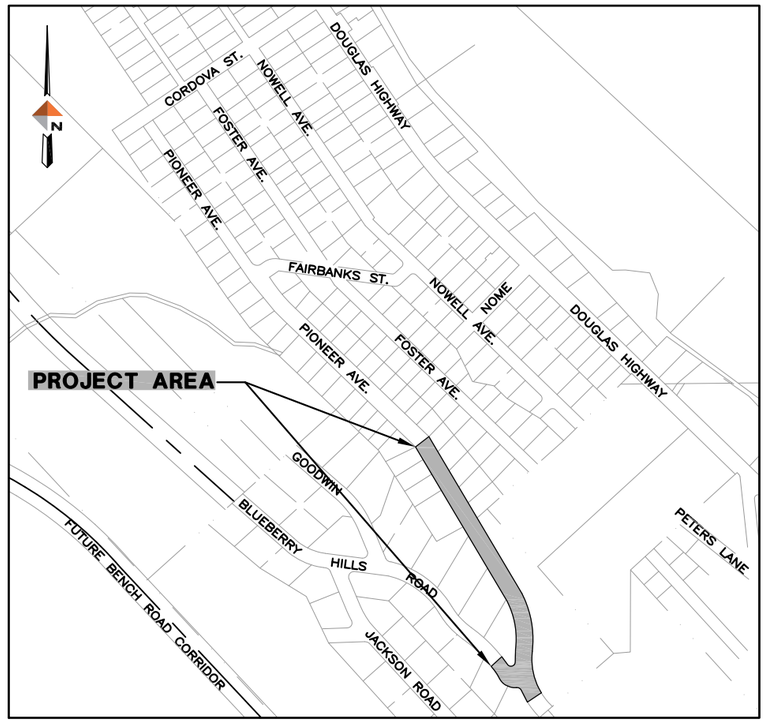

VICINITY MAP
NTS

CITY/BOROUGH OF JUNEAU
ALASKA'S CAPITAL CITY

DOWL HKM
5368 Commercial Blvd.
Juneau, Alaska 99801
(907) 780-3533 Office
(907) 780-3535 Fax
Consulting Engineers • Land Surveyors • Construction Administration

SHEET NO.
1 of 18

S:\LIB\J70388 PHASE III\050 Design Drawings\C3D\J70388 CR01.dwg 2013-9-30 12:27:50

LEGEND

DESCRIPTION	EXISTING	REMOVE	PROPOSED
BURIED ELECTRICAL UTILITIES	E C T		
CATCH BASIN			CB-1
CONTROL POINT			
CURB & GUTTER			
CUT LIMITS			
FIRE HYDRANT			
HOUSE NO	2204		
MAILBOX	MB		MB
PROJECT CONTROL LINE			
PROPERTY LINE			
POWER POLE			
SANITARY SEWER PIPE			
SANITARY SEWER MANHOLE	MH-1		
SIGN			SEE SIGN ASSEMBLY TABLE
STORM DRAIN PIPE			S-1
STORM DRAIN MANHOLE			CB-1
SURVEY MONUMENT– REBAR W/ PLASTIC CAP			
TREE CONIFER			
TREE DECIDUOUS			
WATER LINE PIPE			
WATER VALVE BOX			

ABBREVIATIONS

AC	ASPHALT PAVING
CB	CATCH BASIN
CMP	CORRUGATED METAL PIPE
CPP	CORRUGATED POLYETHYENE PIPE
CONC	CONCRETE
CTE	CONNECT TO EXISTING
DI	DUCTILE IRON
DIA	DIAMETER
FG	FINISHED GRADE
GV	GATE VALVE
INV	INVERT
LG	LIP OF GUTTER
LT	LEFT
MH	MANHOLE
MN	MAGNETIC NAIL
MTE	MATCH TO EXISTING
NO	NUMBER
NTS	NOT TO SCALE
PVC	POLYVINYL CHLORIDE PIPE
RT	RIGHT
STA	STATION
STD	STANDARD
TBC	TOP BACK OF CURB
TBG	TOP BACK OF GUTTER
TP	TOP OF PAVEMENT
TSW	TOP OF SIDEWALK

ABBREVIATIONS TO BE USED WITHOUT PERIODS

GENERAL NOTES

1. BEGIN SUBCUT AT 24 INCHES FROM PAVEMENT SAWCUT LINE AT STREET CONNECTIONS, UNLESS OTHERWISE SHOWN ON THE DRAWINGS, OR DIRECTED BY THE ENGINEER. REMOVE AND REPLACE BASE COURSE WITH 6 INCHES OF 2" MINUS SHOT ROCK/BASE COURSE TO 12 INCHES FROM PAVEMENT SAWCUT LINE. SAWCUT AS NECESSARY ALONG ALL STREET, DRIVEWAY AND SIDEWALK APPROACHES TO PROVIDE A NEAT MATCH LINE.
2. LARGE BOULDERS, STUMPS, LOGS, ORGANICS AND GROUND WATER MAY BE ENCOUNTERED AT VARIOUS DEPTHS DURING TRENCHING AND ROADWAY EXCAVATION OPERATIONS. THESE MATERIALS SHALL BE DISPOSED OF AS REQUIRED BY THE ENGINEER.
3. CONTRACTOR SHALL ASSURE GARBAGE PICKUP AND DAILY MAIL SERVICE WILL BE UNINTERRUPTED TO ALL RESIDENCES AFFECTED BY THIS PROJECT.
4. CBJ ENGINEERING STANDARD DETAILS 4TH EDITION – AUGUST 2011, IS MADE PART OF THIS CONTRACT, WITH CURRENT REVISIONS AS APPLICABLE.
5. ALL EXISTING WATER PIPES (6 INCH DIAMETER AND LARGER), AND APPURTENANCES (TO BE ABANDONED) THAT ARE WITHIN THE STREET AND SIDEWALK LIMITS, SHALL BE REMOVED AND DISPOSED OF, OR FILLED WITH FLOWABLE MIXTURE, UNLESS OTHERWISE NOTED.
6. EXISTING PIPE LOCATIONS ARE DERIVED FROM CBJ AS–BUILTS OR FIELD LOCATED. ACTUAL LOCATIONS MAY VARY FROM THOSE SHOWN. DEPTH OF SOME OF THE EXISTING PIPES SHOWN ON THE ELEVATIONS ARE ASSUMED. DIAL BEFORE YOU DIG 586–1333.
7. GRADING AND ALIGNMENT ARE SUBJECT TO MINOR REVISIONS BY THE ENGINEER. LOCATION OF PROPOSED WATER AND STORM DRAINAGE FACILITIES ARE SUBJECT TO MINOR REVISIONS BY THE ENGINEER. PROVIDE KNOCKOUTS IN CATCH BASINS FOR ALL PIPES SHOWN ON THE PLANS.
8. THE CONTRACTOR SHALL NOTIFY CBJ WATER UTILITIES AT 780–6808 OF PROPOSED WATER SERVICE INTERRUPTION AND SUBMIT THE "WATER SYSTEM SPECIAL USE PERMIT" TO CBJ WATER UTILITIES SUPERINTENDENT FOR APPROVAL AT LEAST 48 HOURS PRIOR TO SHUTDOWN OR FLUSHING OF MAINLINE WATER PIPE. NO WATER SERVICE INTERRUPTION MAY PROCEED UNTIL THIS APPROVAL IS OBTAINED.
9. PROPERTY LINE LOCATIONS USED IN THESE PLANS ARE DERIVED FROM RECORD PLATS AND DO NOT REPRESENT BOUNDARY SURVEY. EXISTING RECORD PLATS DO NOT CLOSE WITH EACH OTHER IN SOME CASES. THE PROPERTY LINES SHOWN ON THESE PLANS ARE A BEST FIT APPROXIMATION OF CLOSURE.
10. CONTRACTOR SHALL VERIFY LOCATION AND DEPTH OF EXISTING WATER AND SEWER PIPES, INCLUDING ALL SERVICES ALONG THE STORM DRAIN AND WATER PIPE ALIGNMENTS, TO DETERMINE PIPE INSULATION LOCATIONS, AND TO ENSURE DAMAGE DOES NOT OCCUR TO THE SERVICE PIPES.
11. ALL ITEMS DESIGNATED TO BE REMOVED SHALL BE DISPOSED OF OFF–SITE, EXCEPT AS NOTED IN THE CONTRACT DOCUMENTS.
12. CONTRACTOR SHALL REFERENCE ALL EXISTING PROPERTY CORNER MONUMENTS (I.E. BRASS CAP MONUMENTS, REBARS, CONCRETE NAILS, CHISELED X's) PRIOR TO CONSTRUCTION AND REMONUMENT AFTER SURFACING IS REPLACED. EXISTING SURVEY MONUMENTS MAY NOT BE SHOWN ON THE DRAWINGS. ALL WORK SHALL BE DONE BY, OR UNDER THE DIRECTION OF, AN ALASKA REGISTERED LAND SURVEYOR.
13. ALL ASPHALT PAVEMENT TO BE REMOVED AND DISPOSED OF SHALL BE DELIVERED TO A STOCKPILE AREA AT THE LEMON CREEK CITY PIT TO BE DESIGNATED BY THE ENGINEER. CONTACT THE ENGINEER FOR THE EXACT LOCATION OF THE STOCKPILE.
14. AEL&P, ACS, AND GCI MAY CONDUCT WORK WITHIN THE PROJECT LIMITS TO RELOCATE UTILITIES AND UPGRADE THEIR RESPECTIVE SYSTEMS. THE CONTRACTOR SHALL COORDINATE ITS ACTIVITIES WITH EACH UTILITY COMPANY AND PROVIDE ACCESS AS NECESSARY FOR UTILITY COMPANIES TO CONDUCT THEIR WORK.
15. ONLY HORIZONTAL ELBOW FITTINGS (BENDS) ARE SHOWN (NOT ALL ARE LABELED) ON DRAWINGS. ADDITIONAL FITTINGS WILL BE REQUIRED FOR VERTICAL DEFLECTIONS NEAR CONNECTIONS TO EXISTING PIPES, AND AT OTHER LOCATIONS REQUIRING GRADE CHANGES TO AVOID CONFLICTS
16. THE CONTRACTOR SHALL RESTRICT ITS COMPACTION AND OTHER VIBRATION INDUCING OPERATIONS AS NECESSARY TO ASSURE NO DAMAGE OCCURS TO ADJACENT BUILDINGS OR STRUCTURES. REFER TO SECTION 01530, ARTICLE 1.7 OF THE STANDARD SPECIFICATIONS FOR FURTHER REQUIREMENTS.
17. THE PLAN DRAWINGS DO NOT SHOW ALL TREES, BUSHES AND LANDSCAPING THAT WILL BE ENCOUNTERED DURING CONSTRUCTION ACTIVITIES. NO TREES, BUSHES OR LANDSCAPING ARE TO BE REMOVED OR DAMAGED, UNLESS SHOWN ON THE DRAWINGS OR DIRECTED BY THE ENGINEER.
18. THE CONTRACTOR SHALL NOT STORE MATERIALS OR EQUIPMENT, OR OPERATE EQUIPMENT WITH ITS TRACKS OR WHEELS PLACED ON PRIVATE PROPERTY, WITHOUT THE WRITTEN APPROVAL OF THE PROPERTY OWNER.
19. THE USE OF GROUT AND QUICKSET CEMENT PRODUCTS WITH ADJUSTING RINGS, BRICKS, WOOD, STONES AND OTHER SIMILAR GRADE ADJUSTMENT DEVICES TO SUPPORT CATCH BASIN FRAMES OVER CATCH BASINS AND MANHOLES WILL NOT BE PERMITTED. SEE THE STANDARD DETAILS AND SECTION 02502 – STORM SEWER MANHOLES, INLETS AND CATCH BASINS FOR CATCH BASIN SUPPORT REQUIREMENTS. CATCH BASIN FRAME AND GRATES SHALL BE SET AT 6–3/4" BELOW TOP BACK OF CURB ELEVATION, WITH 3' LONG CONCRETE GUTTER TRANSITIONS TO BOTH SIDES OF GRATE.
20. TEMPORARY RAMPS SHALL BE PROVIDED AS REQUIRED FOR RESIDENT ACCESS TO THEIR WALKWAYS DURING THE CONSTRUCTION PERIOD.
21. THE CONTRACTOR SHALL ARRANGE FOR ELECTRICAL UTILITY LOCATES PRIOR TO ANY EXCAVATION. UNDERGROUND ELECTRICAL UTILITIES, IF SHOWN ON THE DRAWINGS, INDICATE THEIR EXISTENCE ONLY, AND MAY NOT SHOW THE ACTUAL LOCATION. OTHER BURIED ELECTRICAL UTILITIES MAY EXIST THAT ARE NOT SHOWN ON THE DRAWINGS. DIAL BEFORE YOU DIG AT 586–1333.
22. WATER PIPES WILL BE REQUIRED TO BE INSTALLED WITH MORE THAN 60 INCHES OF COVER IN AREAS WHERE STORM DRAINAGE PIPES ARE CLOSE TO OR BELOW A DEPTH OF 60 INCHES TO INVERT. DEPTHS OF ALL STORM DRAINAGE PIPES SHALL BE DETERMINED PRIOR TO INSTALLING WATER PIPES TO ENSURE CONFLICTS BETWEEN THESE PIPES DO NOT OCCUR. A MINIMUM CLEARANCE OF 8" SHALL BE OBTAINED BETWEEN WATER AND OTHER PIPES.
23. THE CONTRACTOR SHALL PROVIDE TOP OF WATER PIPE ELEVATIONS TO THE ENGINEER AT A MAXIMUM SPACING OF 50 FEET AND AT ALL GRADE BREAKS PRIOR TO BACKFILLING OVER THE PIPE. IF THE PIPE IS BACKFILLED PRIOR TO PROVIDING THESE TOP OF PIPE ELEVATIONS, THE PIPE SHALL BE EXPOSED AND THE TOP OF PIPE SURVEYED BY THE CONTRACTOR.
24. THE CONTRACTOR SHALL NOTIFY EACH RESIDENT OF EACH DRIVEWAY CLOSURE THE DAY PRECEDING THE DAY THE DRIVEWAY IS TO BE CLOSED TO VEHICULAR ACCESS. THE RESIDENT SHALL BE INFORMED OF THE PERIOD OF TIME THE CLOSURE WILL BE IN EFFECT. NO DRIVEWAY CLOSURES WILL BE PERMITTED UNTIL THIS REQUIREMENT HAS BEEN MET TO THE SATISFACTION OF THE ENGINEER.
25. EXISTING POWER CONDUCTORS FOR LIGHTING SYSTEM HAVE NOT BEEN LOCATED AND ARE NOT SHOWN. THE CONTRACTOR SHALL HAVE THESE CONDUCTORS LOCATED AND SHALL PROTECT THEM FROM DAMAGE.

STATE OF ALASKA 49th Peter L. Hildre No.CE4005 9-30-13 REGISTERED PROFESSIONAL ENGINEER

DOWL HKM
5368 Commercial Blvd.
Juneau, Alaska 99801
(907) 780–3533 Office
(907) 780–3535 Fax
Consulting Engineers • Land Surveyors • Construction Administration

JOB No. J70388 | DRAWN BY: STAFF | DESIGNED BY: P. HILDRE | CHECKED BY: STAFF | DATE: SEPT. 2013

CITY/BOROUGH OF JUNEAU
ALASKA'S CAPITAL CITY
DEPARTMENT OF ENGINEERING

PIONEER AVENUE RECONSTRUCTION, PHASE III
CONTRACT NO. E14-022

LEGEND, ABREVIATIONS, AND GENERAL NOTES

SHEET NO. 2 of 18

S:\LIB\J70388 PHASE III\050 Design Drawings\C3D\J70388LD01 PH III.dwg 2013–9–30 12:27:51

SIGN ASSEMBLY TABLE

DIXON STREET

NO.	LOCATION	MUTCD DESIGNATION OR DESCRIPTION	LEGEND AND COMMENTS
1	"P" 21+53, LT	R7-1	"NO PARKING NOV 1-APRIL 1" W/ DOUBLE ARROW (12"X18")
2	"P" 22+52, RT	R7-1	"NO PARKING ANY TIME" W/ DOUBLE ARROW (12"X18")
3	"P" 23+10, LT	R2-1	"SPEED LIMIT 20" (24"X30")(REMOVE EXISTING SIGN AND INSTALL NEW SIGN ON LIGHT POLE)
4	"P" 24+42, RT	W1-2R	CURVE TO RIGHT ARROW (30"X30")
5	"P" 28+75, LT	R2-1	"SPEED LIMIT 20" (24"X30")
6	"P" 29+13, LT	R7-1	"NO PARKING NOV 1-APRIL 1" W/ DOUBLE ARROW (12"X18")
7	"P" 31+00, LT	R1-1	"STOP" (30"X30")
8	"B" 10+83, LT	R7-1	"NO PARKING ANY TIME" W/ DOUBLE ARROW (12"X18")

A) ALL SIGNS TO BE CONSTRUCTED IN ACCORDANCE WITH THE CITY & BOROUGH STANDARD DETAIL NO. 127.

B) ALL SIGNS TO BE LOCATED AS DIRECTED BY THE ENGINEER.

C) SALVAGE ALL SIGN PANELS AND DELIVER TO CBJ STREETS MAINTENANCE SHOP. DISPOSE OF ALL EXISTING POSTS AND POST SOCKETS.

D) ALL POSTS SHALL BE "TELSPAR", OR APPROVED EQUAL.

E) POSTS SHALL BE PRE-PUNCHED WITH ALL KNOCKOUTS REMOVED.

F) REPLACE ALL POST ASSEMBLY MATERIALS.

CATCH BASIN FRAME AND GRATE TABLE

CATCH BASIN No.	EAST JORDAN IRON WORKS, OLYMPIC FOUNDRY CO., CBJ STANDARD No., OR APPROVED EQUAL
CB-1	OF SM18
CB-2	OF SM18
CB-3	EJIW 7701 T2 HOOD W/ 7700 M2 GRATE
CB-4	EJIW 7701 T2 HOOD W/ 7700 M2 GRATE
CB-5	EJIW 7701 T2 HOOD W/ 7700 M2 GRATE
CB-6	EJIW 7701 T2 HOOD W/ 7700 M2 GRATE
CB-7	EJIW 7701 T2 HOOD W/ 7700 M2 GRATE
CB-8	EJIW 7701 T2 HOOD W/ 7700 M2 GRATE
CB-9	EJIW 7701 T2 HOOD W/ 7700 M2 GRATE
CB-10	EJIW 7701 T2 HOOD W/ 7700 M2 GRATE
CB-11	EJIW 7701 T2 HOOD W/ 7700 M2 GRATE
CB-12	EJIW 7701 T2 HOOD W/ 7700 M2 GRATE
CB-13	EJIW 7701 T2 HOOD W/ 7700 M2 GRATE

CATCH BASIN TOP SLAB OPENINGS SHALL BE DIMENSIONED TO FIT THE FRAME DIMENSIONS. ALL COVERS SHALL BE HEAVY DUTY CONSTRUCTION AND BICYCLE SAFE. ALL FRAMES AND GRATES SHALL BE DUCTILE IRON.

LOCAL FLOW LINE DEPRESSION AT CATCH BASIN SHALL BE ¾ INCH, WITH 36" TRANSITIONS TO EACH SIDE OF FRAME, UNLESS OTHERWISE DIRECTED BY THE ENGINEER.

NOTES FOR TRAFFIC CONTROL:

- ALL TRAFFIC BE CONTROLLED PER THE REQUIREMENTS OF THE ALASKA TRAFFIC MANUAL (U.S. DEPARTMENT OF TRANSPORTATION "MANUAL ON UNIFORM TRAFFIC CONTROL DEVICES" AND THE ALASKA SUPPLEMENT).
- ALL DETOURS SHALL BE AS APPROVED BY THE ENGINEER.
- ROAD CLOSURES WILL BE PERMITTED ONLY AS APPROVED BY THE ENGINEER.
- THE CONTRACTOR WILL NOT BE PERMITTED TO OBSTRUCT VEHICULAR TRAFFIC BETWEEN THE HOURS OF 4:30pm AND 8:00am SEVEN DAYS A WEEK. DURING THIS PERIOD, TWO LANES SHALL BE OPEN TO VEHICULAR TRAFFIC WITH A MINIMUM TOTAL WIDTH OF 20 FEET.
- PROVIDE ACCESS FOR EMERGENCY VEHICLES AT ALL TIMES.
- A MINIMUM OF ONE LANE (11 FOOT MINIMUM WIDTH) SHALL BE KEPT OPEN TO VEHICULAR TRAFFIC AT ALL TIMES, EXCEPT A FIVE (5) MINUTE MAXIMUM STOPPAGE TO VEHICULAR TRAFFIC WILL BE PERMITTED, WITH NO MORE THAN ONE TRAFFIC STOPPAGE PER HOUR. THESE REQUIREMENTS WILL BE APPLICABLE TO ALL OPERATIONS INCLUDING ASPHALT PAVING AND FOG SEALING OPERATIONS.
- PEDESTRIAN TRAFFIC SHALL BE AVAILABLE ALONG AT LEAST ONE SIDE OF THE STREET AT ALL TIMES. THE PEDESTRIAN PATHWAY SHALL BE CLEARLY MARKED AND SHALL SATISFY THE REQUIREMENTS AS DESCRIBED IN THE SPECIAL PROVISIONS.

STATE OF ALASKA 49th Peter L. Hildre No.CE4005 9-30-13 REGISTERED PROFESSIONAL ENGINEER

DOWL HKM
5368 Commercial Blvd.
Juneau, Alaska 99801
(907) 780-3533 Office
(907) 780-3535 Fax
Consulting Engineers • Land Surveyors • Construction Administration

JOB No. J70388 | DRAWN BY: STAFF | DESIGNED BY: P. HILDRE | CHECKED BY: STAFF | DATE: SEPT. 2013

CITY/BOROUGH OF JUNEAU
ALASKA'S CAPITAL CITY
DEPARTMENT OF ENGINEERING

PIONEER AVENUE RECONSTRUCTION, PHASE III CONTRACT NO. E14-022

SIGN ASSEMBLY TABLE, CATCH BASIN FRAME AND GRATE TABLE, AND TRAFFIC CONTROL NOTES

SHEET NO. 3 of 18

S:\LIB\J70388 PHASE III\050 Design Drawings\C3D\J70388 TS01 PH III.dwg 2013-9-30 12:27:53

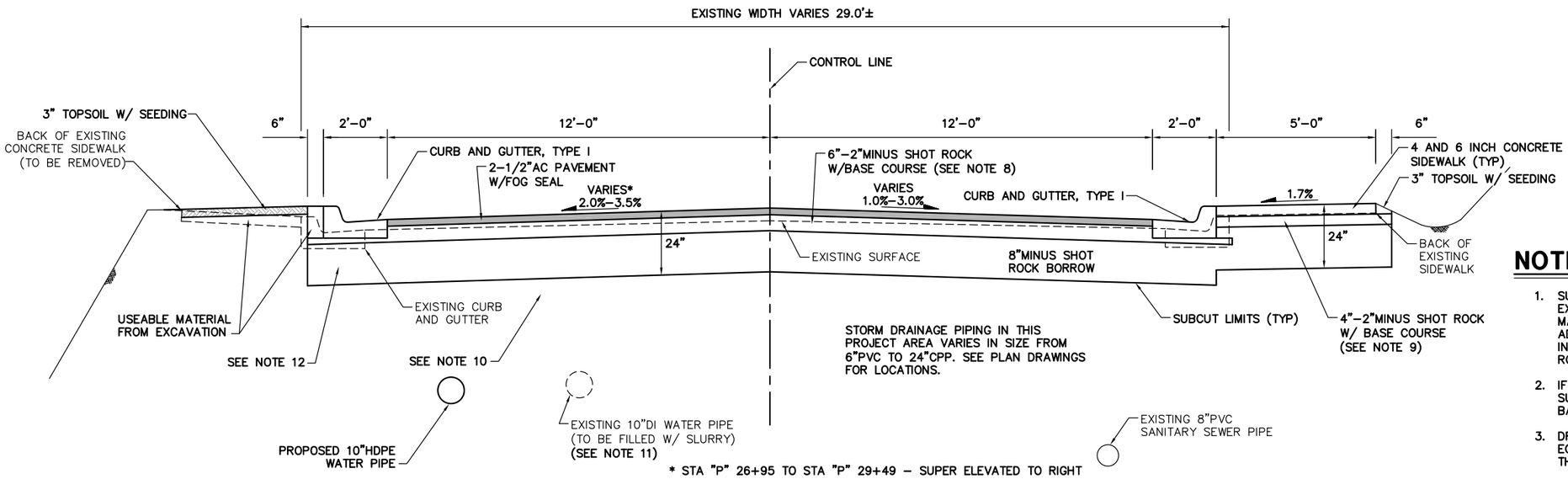

PIONEER AVENUE
STA "P" 20+43 TO BLUEBERRY HILLS ROAD
TYPICAL SECTION

NTS

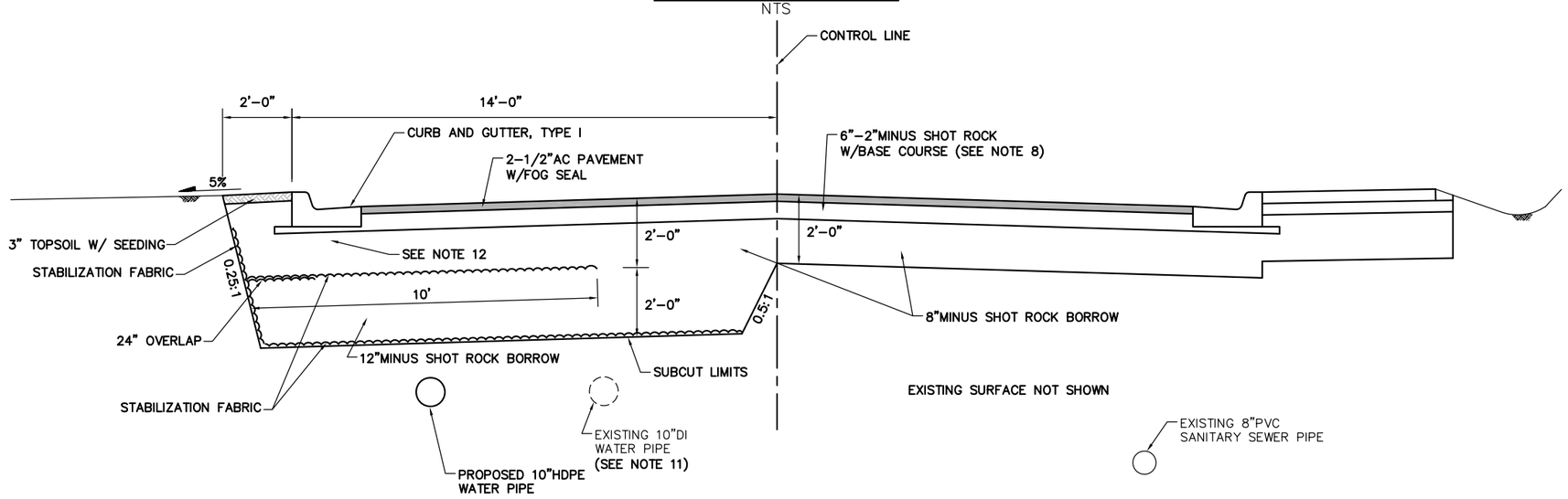

EMBANKMENT RECONSTRUCTION - SECTION A

NTS

NOTES:

1. SUBCUT DEPTH IS SUBJECT TO REVISION BY THE ENGINEER, DEPENDENT ON EXISTING SUBSURFACE CONDITIONS. IF ORGANIC OR OTHER UNSUITABLE MATERIALS ARE FOUND TO EXIST AT OR NEAR THE PLANNED SUBCUT LEVEL, ADDITIONAL EXCAVATION AND BACKFILL MAY BE REQUIRED. ALL MATERIALS, INCLUDING BOULDERS, SHALL BE REMOVED TO THE DEPTHS REQUIRED FOR THE ROADWAY SUBCUT AND FOR ALL PIPING.
2. IF EXISTING SOILS WITHIN THE PLANNED SUBCUT LAYER ARE FOUND TO BE SUITABLE, AS DETERMINED BY THE ENGINEER, THE DEPTH OF EXCAVATION AND BACKFILL MAY BE DECREASED.
3. DRIVEWAYS DISTURBED DURING CONSTRUCTION SHALL BE RECONSTRUCTED TO EQUAL OR BETTER CONDITION WITH SUBGRADE REPLACED IN LAYERS TO MATCH THOSE REMOVED, EXCEPT:
   A. CONCRETE DRIVEWAYS INCLUDING SIDEWALK DRIVEWAY RAMPS SHALL BE SUBCUT TO 24 INCHES BELOW FINISH GRADE AND REPLACED WITH 14 INCHES OF SHOT ROCK BORROW, 4 INCHES OF 2"MINUS SHOT ROCK W/ BASE COURSE AND 6 INCHES OF CONCRETE.
   B. ORGANICS, ROOTS, WOOD OR OTHER DELETERIOUS MATERIALS ENCOUNTERED IN THE DRIVEWAYS DURING EXCAVATION OPERATIONS SHALL NOT BE REPLACED, BUT SHALL BE DISPOSED OF OFF-SITE. BACKFILL VOIDS BELOW THE REQUIRED SUBCUT LAYER WITH USABLE MATERIAL FROM EXCAVATION.
4. DRIVEWAY RAMPS SHALL CONFORM TO CBJ STANDARD 105 REGARDING TRANSITIONS FOR THE DEPRESSED SIDEWALK, EXCEPT SHALL BE CONSTRUCTED WITH GRADE BREAKS WHERE SHOWN ON THE DRAWINGS.
5. ACTUAL TOP OF PAVEMENT SHALL BE 1/4 INCH – 3/8 INCH ABOVE TOP EDGE OF CONCRETE GUTTER AND TOP OF PAVEMENT ELEVATIONS AS GIVEN ON THE PLAN GRADE SHEETS. TOP OF 2"MINUS SHOT ROCK W/ BASE COURSE IS 2-1/4" BELOW LIP OF GUTTER.
6. TOPSOIL DEPTH SHALL BE 3 INCHES, UNLESS OTHERWISE DIRECTED BY THE ENGINEER.
7. GRADE TOP OF CURB AT 2%.
8. THIS LAYER SHALL BE 4" TO 5" OF 2" MINUS SHOT ROCK WITH 1" TO 2" TOP LAYER OF BASE COURSE, GRADING D-1 FOR A TOTAL THICKNESS OF 6". THE 2" MINUS SHOT ROCK SHALL BE WELL COMPACTED PRIOR TO PLACING BASE COURSE, GRADING D-1.
9. A 4" THICK LAYER OF BASE COURSE, GRADING D-1 MAY BE USED UNDER SIDEWALK AS A SUBSTITUTE FOR 2" MINUS SHOT ROCK W/ BASE COURSE. THIS WILL BE CONSIDERED A NO COST CHANGE.
10. ADDITIONAL SUBCUT AND EMBANKMENT RECONSTRUCTION WILL BE REQUIRED IN AREAS ALONG THE LEFT SIDE. REFER TO THE PLAN DRAWING SHEETS FOR THE SECTION A OR SECTION B LIMITS.
11. EXISTING ABANDONED TELEMETRY CONDUIT RUNS WITH WATER PIPE. REMOVE AND DISPOSE OF THIS CONDUIT/CONDUCTOR WHERE WATER PIPE IS REMOVED.
12. EXISTING ELECTRICAL CONDUITS AND CONDUCTORS NOT SHOWN. CONTRACTOR SHALL OBTAIN LOCATES AS REQUIRED TO ENSURE THESE FACILITIES ARE NOT DAMAGED DURING ITS EXCAVATION AND BACKFILLING OPERATIONS.

STATE OF ALASKA 49th Peter L. Hildre No.CE4005 9-30-13 REGISTERED PROFESSIONAL ENGINEER
DOWL HKM
5368 Commercial Blvd.
Juneau, Alaska 99801
(907) 780-3533 Office
(907) 780-3535 Fax
Consulting Engineers • Land Surveyors • Construction Administration
CITY/BOROUGH OF JUNEAU ALASKA'S CAPITAL CITY
DEPARTMENT OF ENGINEERING

JOB No. J70388	DRAWN BY: STAFF	DESIGNED BY: P. HILDRE	CHECKED BY: STAFF	DATE: SEPT. 2013

PIONEER AVENUE RECONSTRUCTION, PHASE III CONTRACT NO. E14-022

TYPICAL SECTIONS

SHEET NO. 4 of 18

S:\LIB\J70388 PHASE III\050 Design Drawings\C3D\J70388 TS01 PH III.dwg 2013-9-30 12:27:54

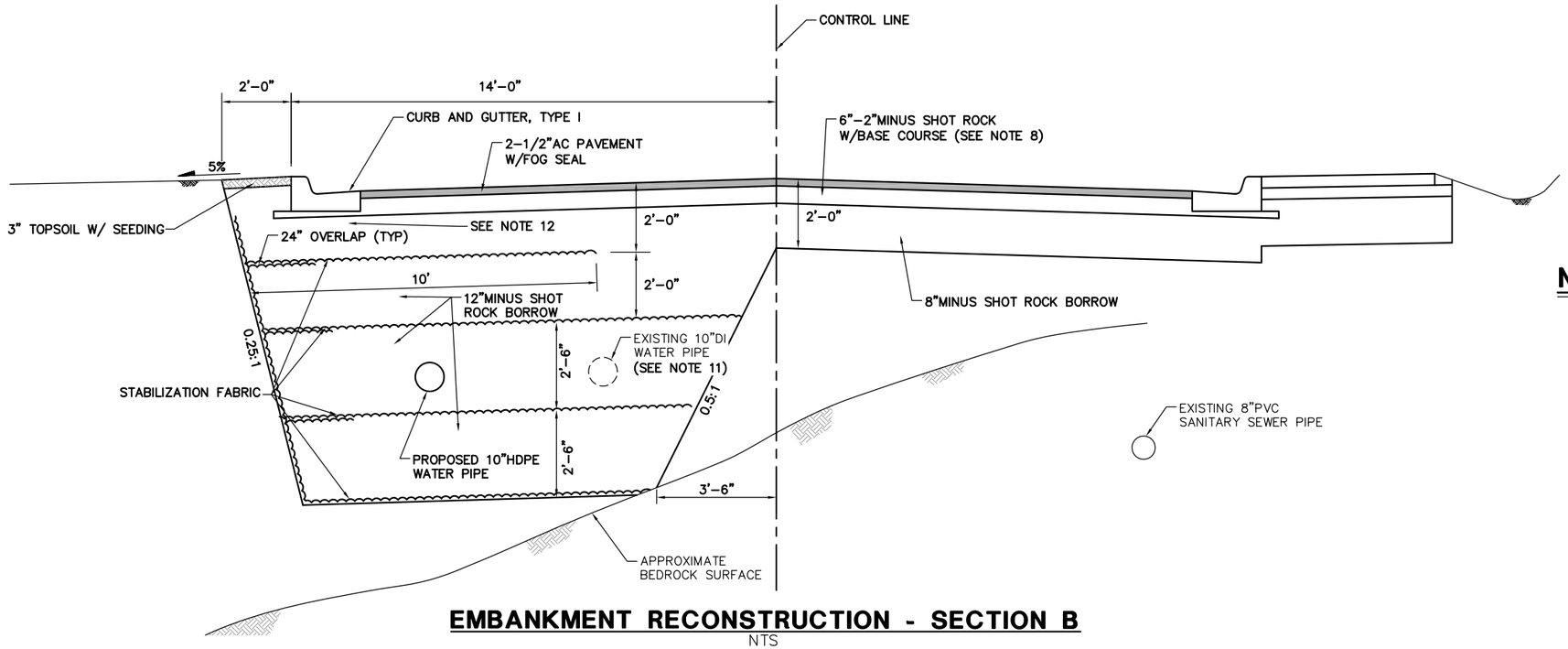

EMBANKMENT RECONSTRUCTION - SECTION B

NTS

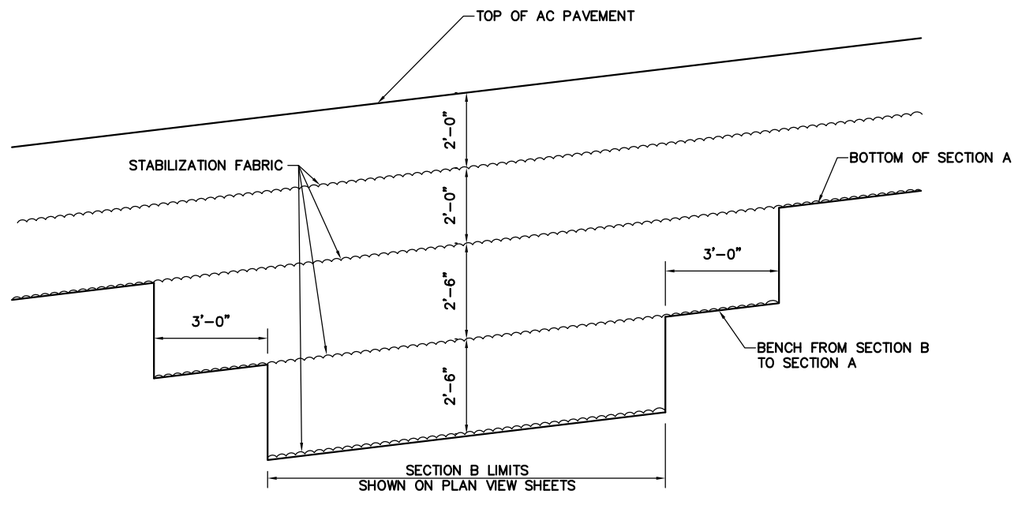

EMBANKMENT RECONSTRUCTION - SECTION A TO SECTION B TRANSITION

NTS

NOTES:

1. SUBCUT DEPTH IS SUBJECT TO REVISION BY THE ENGINEER, DEPENDENT ON EXISTING SUBSURFACE CONDITIONS. IF ORGANIC OR OTHER UNSUITABLE MATERIALS ARE FOUND TO EXIST AT OR NEAR THE PLANNED SUBCUT LEVEL, ADDITIONAL EXCAVATION AND BACKFILL MAY BE REQUIRED. ALL MATERIALS, INCLUDING BOULDERS, SHALL BE REMOVED TO THE DEPTHS REQUIRED FOR THE ROADWAY SUBCUT AND FOR ALL PIPING.
2. IF EXISTING SOILS WITHIN THE PLANNED SUBCUT LAYER ARE FOUND TO BE SUITABLE, AS DETERMINED BY THE ENGINEER, THE DEPTH OF EXCAVATION AND BACKFILL MAY BE DECREASED.
3. DRIVEWAYS DISTURBED DURING CONSTRUCTION SHALL BE RECONSTRUCTED TO EQUAL OR BETTER CONDITION WITH SUBGRADE REPLACED IN LAYERS TO MATCH THOSE REMOVED, EXCEPT:
   A. CONCRETE DRIVEWAYS INCLUDING SIDEWALK DRIVEWAY RAMPS SHALL BE SUBCUT TO 24 INCHES BELOW FINISH GRADE AND REPLACED WITH 14 INCHES OF SHOT ROCK BORROW, 4 INCHES OF 2"MINUS SHOT ROCK W/ BASE COURSE AND 6 INCHES OF CONCRETE.
   B. ORGANICS, ROOTS, WOOD OR OTHER DELETERIOUS MATERIALS ENCOUNTERED IN THE DRIVEWAYS DURING EXCAVATION OPERATIONS SHALL NOT BE REPLACED, BUT SHALL BE DISPOSED OF OFF–SITE. BACKFILL VOIDS BELOW THE REQUIRED SUBCUT LAYER WITH USABLE MATERIAL FROM EXCAVATION.
4. DRIVEWAY RAMPS SHALL CONFORM TO CBJ STANDARD 105 REGARDING TRANSITIONS FOR THE DEPRESSED SIDEWALK, EXCEPT SHALL BE CONSTRUCTED WITH GRADE BREAKS WHERE SHOWN ON THE DRAWINGS.
5. ACTUAL TOP OF PAVEMENT SHALL BE 1/4 INCH – 3/8 INCH ABOVE TOP EDGE OF CONCRETE GUTTER AND TOP OF PAVEMENT ELEVATIONS AS GIVEN ON THE PLAN GRADE SHEETS. TOP OF 2"MINUS SHOT ROCK W/ BASE COURSE IS 2–1/4" BELOW LIP OF GUTTER.
6. TOPSOIL DEPTH SHALL BE 3 INCHES, UNLESS OTHERWISE DIRECTED BY THE ENGINEER.
7. GRADE TOP OF CURB AT 2%.
8. THIS LAYER SHALL BE 4" TO 5" OF 2" MINUS SHOT ROCK WITH 1" TO 2" TOP LAYER OF BASE COURSE, GRADING D–1 FOR A TOTAL THICKNESS OF 6". THE 2" MINUS SHOT ROCK SHALL BE WELL COMPACTED PRIOR TO PLACING BASE COURSE, GRADING D–1.
9. A 4" THICK LAYER OF BASE COURSE, GRADING D–1 MAY BE USED UNDER SIDEWALK AS A SUBSTITUTE FOR 2" MINUS SHOT ROCK W/ BASE COURSE. THIS WILL BE CONSIDERED A NO COST CHANGE.
10. ADDITIONAL SUBCUT AND EMBANKMENT RECONSTRUCTION WILL BE REQUIRED IN AREAS ALONG THE LEFT SIDE. REFER TO THE PLAN DRAWING SHEETS FOR THE SECTION A OR SECTION B LIMITS.
11. EXISTING ABANDONED TELEMETRY CONDUIT RUNS WITH WATER PIPE. REMOVE AND DISPOSE OF THIS CONDUIT/CONDUCTOR WHERE WATER PIPE IS REMOVED, OR WHERE IT IS WITHIN SUBCUT.
12. EXISTING ELECTRICAL CONDUITS AND CONDUCTORS NOT SHOWN. CONTRACTOR SHALL OBTAIN LOCATES AS REQUIRED TO ENSURE THESE FACILITIES ARE NOT DAMAGED DURING ITS EXCAVATION AND BACKFILLING OPERATIONS.

STATE OF ALASKA 49th Peter L. Hildre No.CE4005 9-30-13 REGISTERED PROFESSIONAL ENGINEER

DOWL HKM
5368 Commercial Blvd.
Juneau, Alaska 99801
(907) 780–3533 Office
(907) 780–3535 Fax
Consulting Engineers • Land Surveyors • Construction Administration

JOB No. J70388	DRAWN BY: STAFF	DESIGNED BY: P. HILDRE	CHECKED BY: STAFF	DATE: SEPT. 2013

CITY/BOROUGH OF JUNEAU
ALASKA'S CAPITAL CITY
DEPARTMENT OF ENGINEERING

PIONEER AVENUE RECONSTRUCTION, PHASE III
CONTRACT NO. E14-022

TYPICAL SECTIONS

SHEET NO. 5 of 18

S:\JB\J70388 PHASE III\D50 Design Drawings\C3D\J70388 TS01 PH III.dwg 2013-9-30 12:27:55

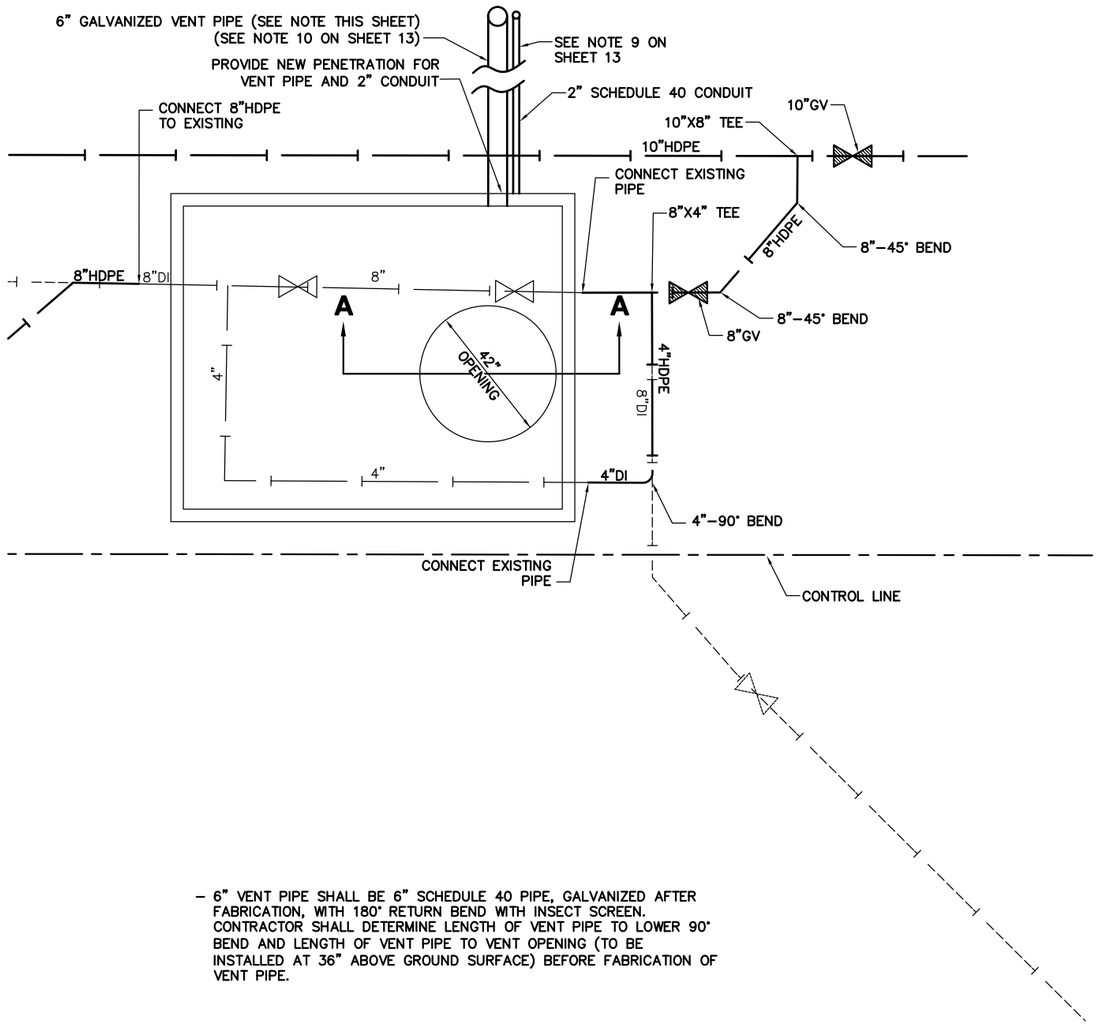

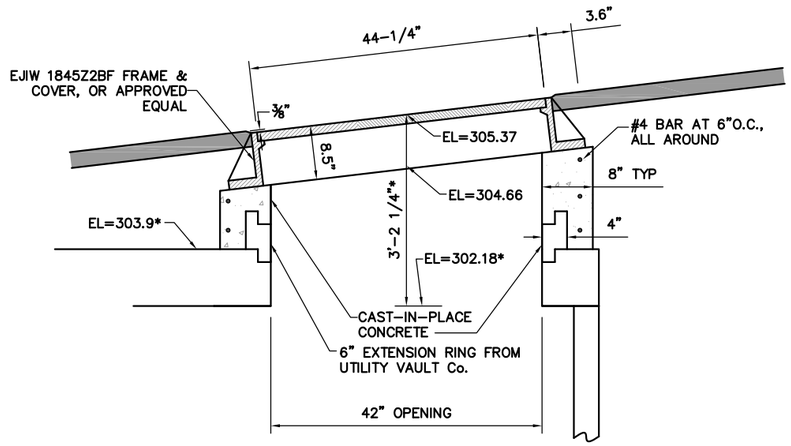

* ELEVATIONS AND DIMENSION IS APPROXIMATE ONLY. CONTRACTOR SHALL CONSTRUCT FRAME AND COVER SUPPORT STRUCTURE TO MATCH FINISH GRADE AND CROSS AND LONGITUDINAL SLOPES.

SECTION A-A
WATER VAULT ACCESS OPENING REPLACEMENT
NTS

– 6" VENT PIPE SHALL BE 6" SCHEDULE 40 PIPE, GALVANIZED AFTER FABRICATION, WITH 180° RETURN BEND WITH INSECT SCREEN. CONTRACTOR SHALL DETERMINE LENGTH OF VENT PIPE TO LOWER 90° BEND AND LENGTH OF VENT PIPE TO VENT OPENING (TO BE INSTALLED AT 36" ABOVE GROUND SURFACE) BEFORE FABRICATION OF VENT PIPE.

PLAN VIEW
NTS

S:\LIB\J70388 PHASE III\050 Design Drawings\C3D\J70388 TS01 PH III.dwg 2013-9-30 12:27:56

STATE OF ALASKA 49th Peter L. Hildre No.CE4005 9-30-13 REGISTERED PROFESSIONAL ENGINEER
DOWL HKM
5368 Commercial Blvd.
Juneau, Alaska 99801
(907) 780-3533 Office
(907) 780-3535 Fax
Consulting Engineers • Land Surveyors • Construction Administration
JOB No. J70388 | DRAWN BY: STAFF | DESIGNED BY: P. HILDRE | CHECKED BY: STAFF | DATE: SEPT. 2013
CITY/BOROUGH OF JUNEAU ALASKA'S CAPITAL CITY
DEPARTMENT OF ENGINEERING

PIONEER AVENUE
RECONSTRUCTION, PHASE III
CONTRACT NO. E14-022

WATER VAULT DETAILS

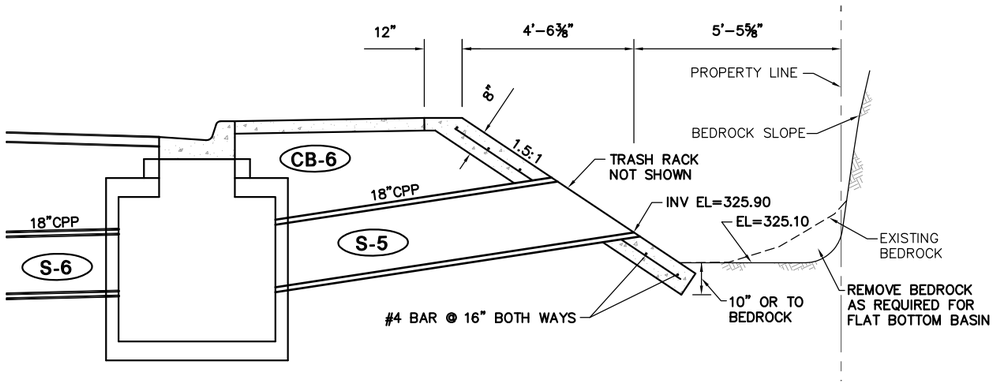

SECTION A-A
NTS

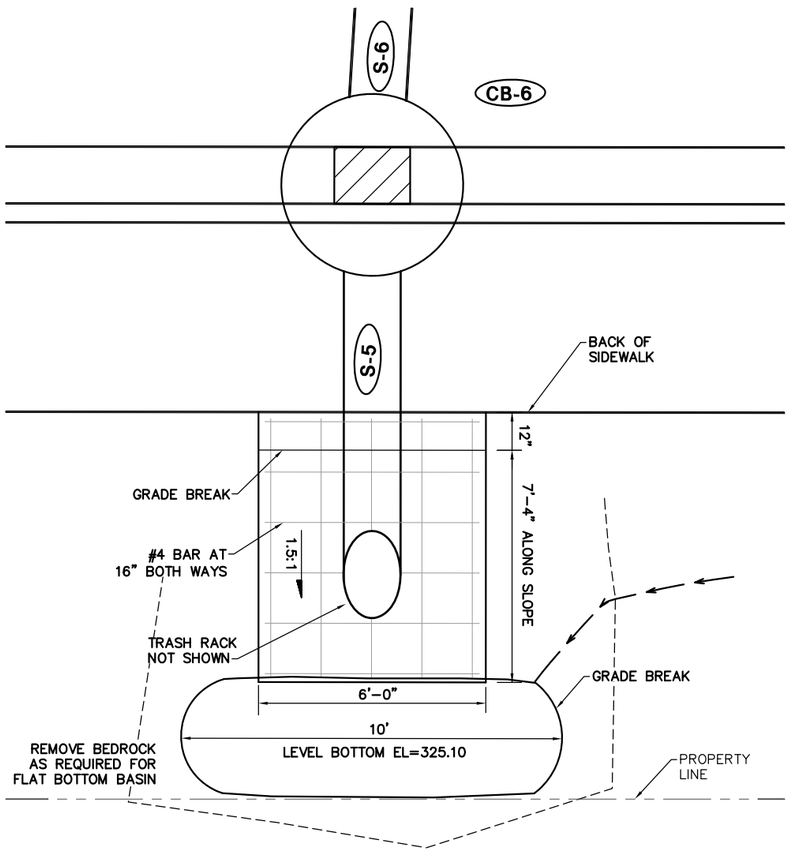

PLAN VIEW
NTS

DRAINAGE BASIN AT S-5

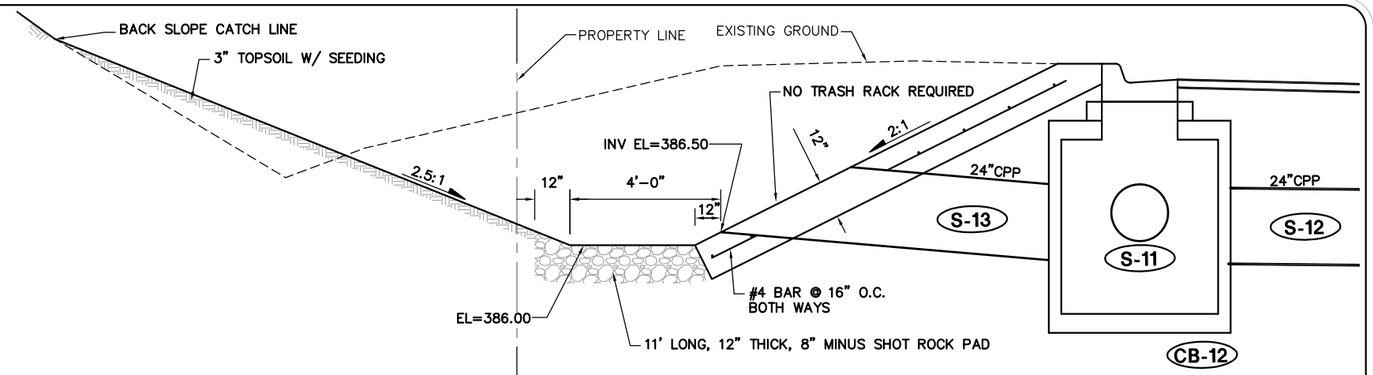

SECTION A-A
NTS

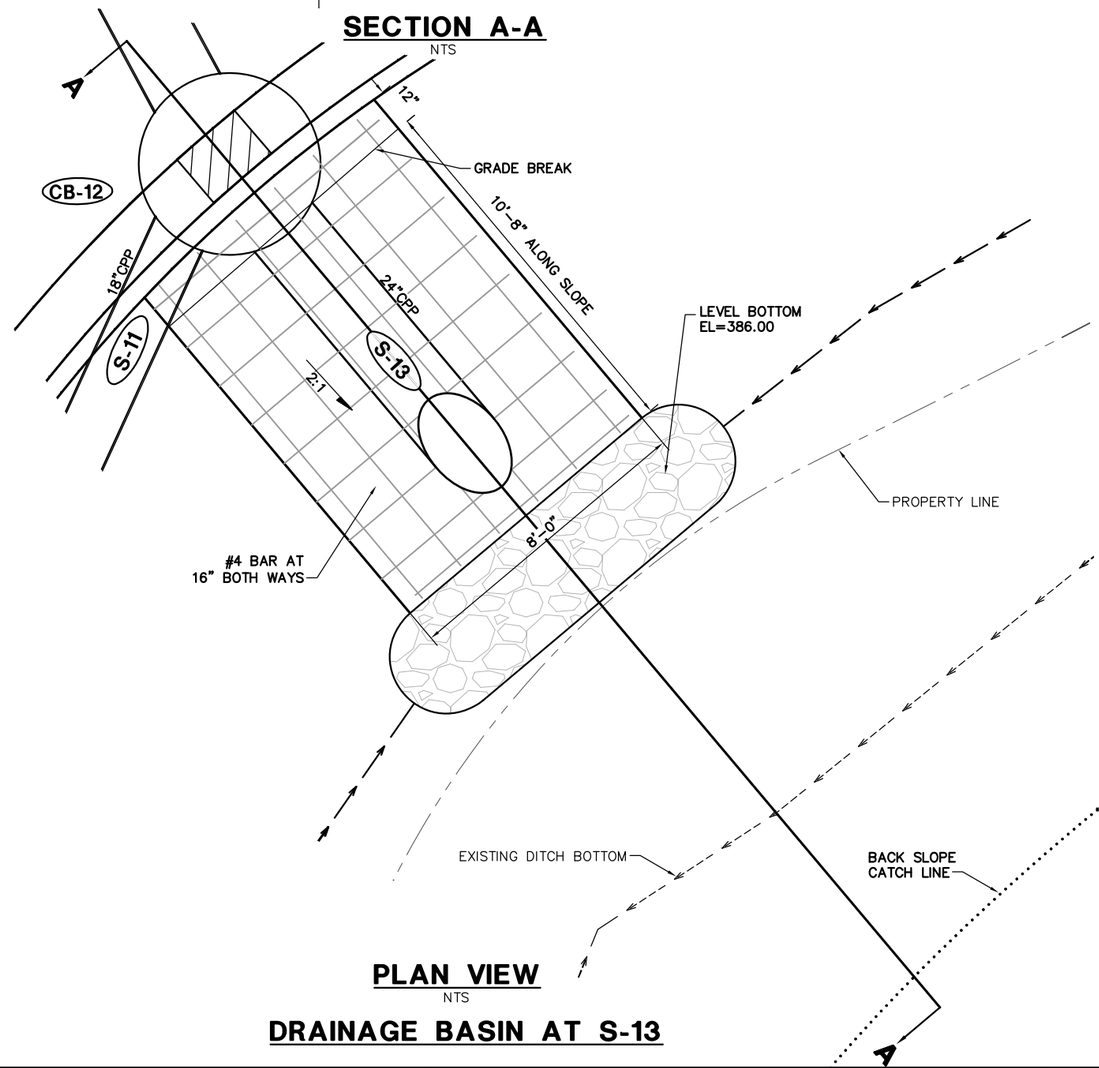

PLAN VIEW
NTS

DRAINAGE BASIN AT S-13

STATE OF ALASKA 49th
Peter L. Hildre
No.CE4005
9-30-13
REGISTERED PROFESSIONAL ENGINEER

DOWL HKM
5368 Commercial Blvd.
Juneau, Alaska 99801
(907) 780-3533 Office
(907) 780-3535 Fax
Consulting Engineers • Land Surveyors • Construction Administration

JOB No. J70388 | DRAWN BY: STAFF | DESIGNED BY: P. HILDRE | CHECKED BY: STAFF | DATE: SEPT. 2013

CITY/BOROUGH OF JUNEAU
ALASKA'S CAPITAL CITY
DEPARTMENT OF ENGINEERING

PIONEER AVENUE
RECONSTRUCTION, PHASE III
CONTRACT NO. E14-022

DRAINAGE BASIN DETAILS

SHEET NO. 7 of 18

S:\LIB\J70388 PHASE III\050 Design Drawings\C3D\J70388 TS01 PH III.dwg 2013-9-30 12:27:57

VERTICAL CONTROL		
TBM No.	ELEVATION	DESCRIPTION
E	300.14	MOST NORTH BOLT OF TOP FLANGE OF FIRE HYDRANT IN FRONT OF 3133 PIONEER AVENUE.
F	398.72	MOST SOUTH BOLT ON TOP FLANGE OF FIRST FIRE HYDRANT ON BLUEBERRY HILLS ROAD.

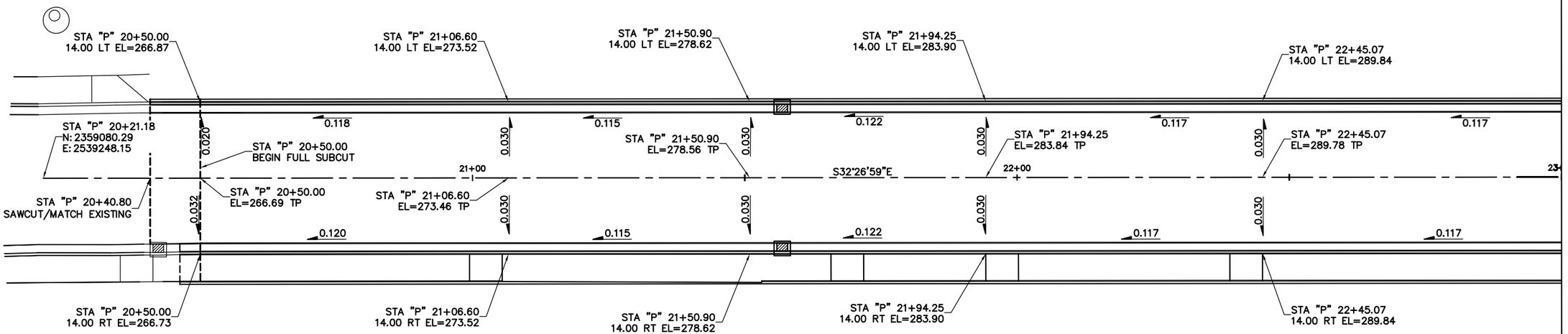

MATCHLINE STA "P" 23+00

NOTES:

1. STATIONS, OFFSETS, ELEVATIONS AND CURVE INFORMATION ALONG CURBING ARE TO TOP BACK OF CURB (TBC), UNLESS OTHERWISE NOTED. TOP OF PAVEMENT ARE TP. TOP OF SIDEWALK ARE TSW.
2. SEE TYPICAL SECTIONS FOR OTHER GRADING INFORMATION.
3. ESTABLISH VERTICAL CURVES AS NECESSARY FOR A SMOOTH ALIGNMENT (NO ANGLE POINTS) BY VISUALLY ALIGNING TOP OF CURB THOUGH VERTICAL CONTROL POINTS.

10 0 10 20
SCALE IN FEET

STATE OF ALASKA
49th
Peter L. Hildre
No.CE4005
9-30-13
REGISTERED PROFESSIONAL ENGINEER

DOWL HKM
5368 Commercial Blvd.
Juneau, Alaska 99801
(907) 780-3533 Office
(907) 780-3535 Fax
Consulting Engineers • Land Surveyors • Construction Administration

JOB No. J70388	DRAWN BY: STAFF	DESIGNED BY: P. HILDRE	CHECKED BY: STAFF	DATE: SEPT. 2013

CITY/BOROUGH OF JUNEAU
ALASKA'S CAPITAL CITY
DEPARTMENT OF ENGINEERING

PIONEER AVENUE
RECONSTRUCTION, PHASE III
CONTRACT NO. E14-022

PIONEER AVENUE
HORIZONTAL AND VERTICAL CONTROL
CURB AND GUTTER LAYOUT AND GRADES
B.O.P. TO STA "P" 23+00

SHEET NO.
8
of
18

S:\LIB\J70388 PHASE III\050 Design Drawings\C3D\J70388 CG01.dwg 2013-9-30 12:27:58

VERTICAL CONTROL		
TBM No.	**ELEVATION**	**DESCRIPTION**
E	300.14	MOST NORTH BOLT OF TOP FLANGE OF FIRE HYDRANT IN FRONT OF 3133 PIONEER AVENUE.
F	398.72	MOST SOUTH BOLT ON TOP FLANGE OF FIRST FIRE HYDRANT ON BLUEBERRY HILLS ROAD.

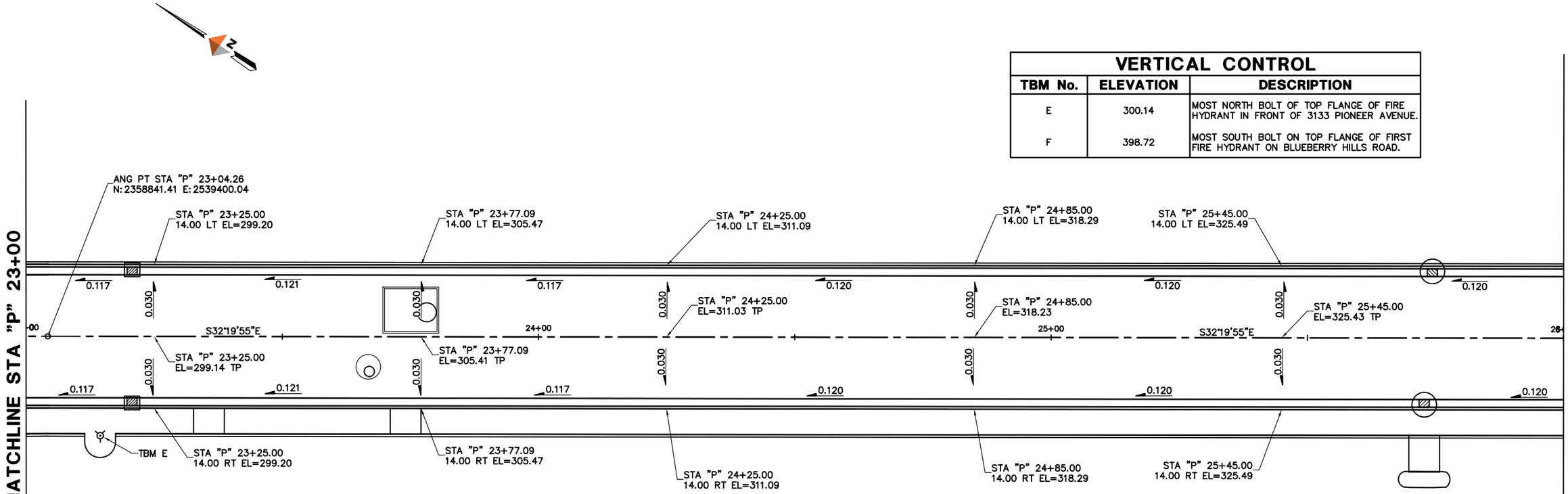

NOTES:

1. STATIONS, OFFSETS, ELEVATIONS AND CURVE INFORMATION ALONG CURBING ARE TO TOP BACK OF CURB (TBC), UNLESS OTHERWISE NOTED. TOP OF PAVEMENT ARE TP. TOP OF SIDEWALK ARE TSW.
2. SEE TYPICAL SECTIONS FOR OTHER GRADING INFORMATION.
3. ESTABLISH VERTICAL CURVES AS NECESSARY FOR A SMOOTH ALIGNMENT (NO ANGLE POINTS) BY VISUALLY ALIGNING TOP OF CURB THOUGH VERTICAL CONTROL POINTS.

10 0 10 20
SCALE IN FEET

STATE OF ALASKA 49th
Peter L. Hildre
No. CE4005
9-30-13
REGISTERED PROFESSIONAL ENGINEER

DOWL HKM
5368 Commercial Blvd.
Juneau, Alaska 99801
(907) 780-3533 Office
(907) 780-3535 Fax
Consulting Engineers • Land Surveyors • Construction Administration

JOB No. J70388	DRAWN BY: STAFF	DESIGNED BY: P. HILDRE	CHECKED BY: STAFF	DATE: SEPT. 2013

CITY/BOROUGH OF JUNEAU
ALASKA'S CAPITAL CITY
DEPARTMENT OF ENGINEERING

PIONEER AVENUE
RECONSTRUCTION, PHASE III
CONTRACT NO. E14-022

PIONEER AVENUE
HORIZONTAL AND VERTICAL CONTROL
CURB AND GUTTER LAYOUT AND GRADES
STA "P" 23+00 TO STA "P" 26+00

SHEET NO.
9
of
18

S:\LIB\J70388 PHASE III\050 Design Drawings\C3D\J70388 CG01.dwg 2013-9-30 12:28:00

VERTICAL CONTROL		
TBM No.	ELEVATION	DESCRIPTION
E	300.14	MOST NORTH BOLT OF TOP FLANGE OF FIRE HYDRANT IN FRONT OF 3133 PIONEER AVENUE.
F	398.72	MOST SOUTH BOLT ON TOP FLANGE OF FIRST FIRE HYDRANT ON BLUEBERRY HILLS ROAD.

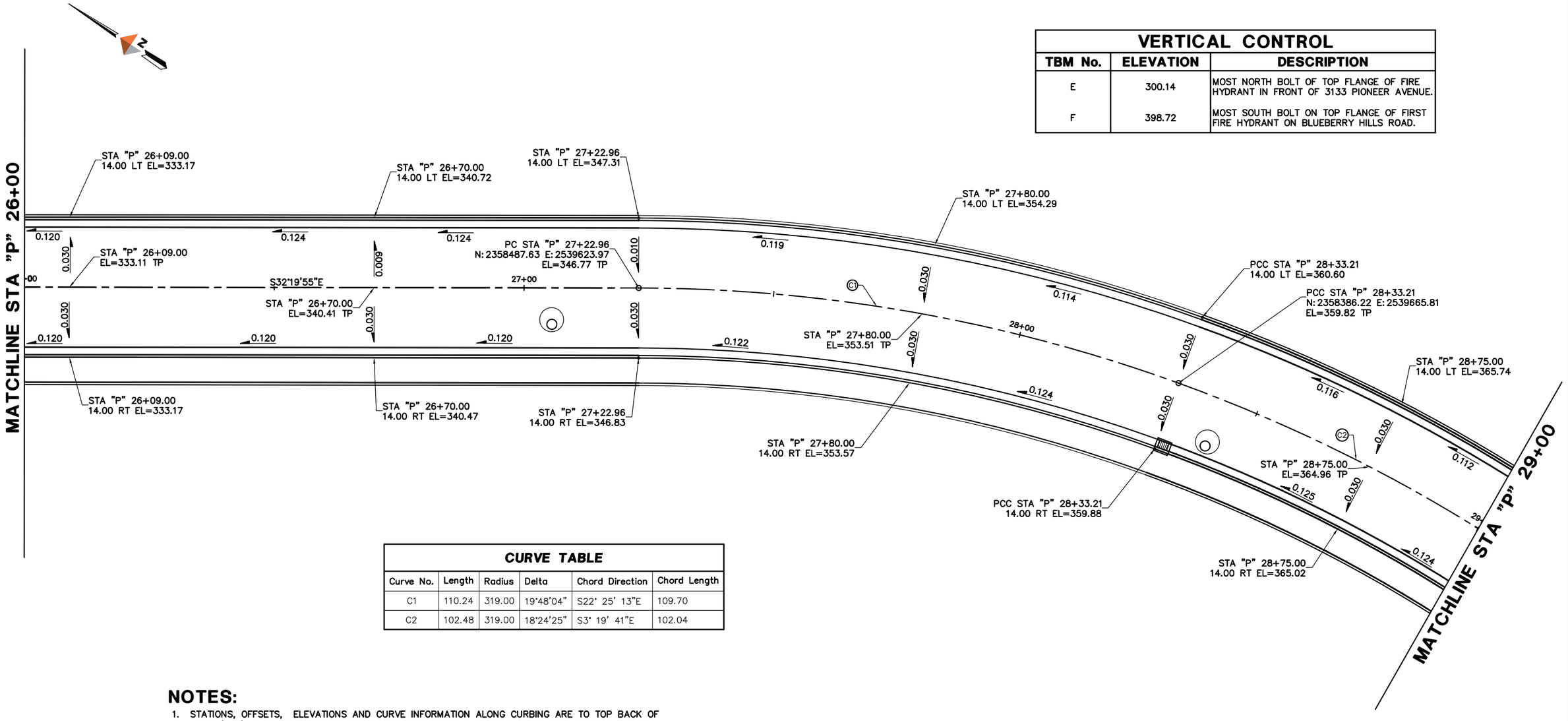

CURVE TABLE					
Curve No.	Length	Radius	Delta	Chord Direction	Chord Length
C1	110.24	319.00	19°48'04"	S22° 25' 13"E	109.70
C2	102.48	319.00	18°24'25"	S3° 19' 41"E	102.04

NOTES:

1. STATIONS, OFFSETS, ELEVATIONS AND CURVE INFORMATION ALONG CURBING ARE TO TOP BACK OF CURB (TBC), UNLESS OTHERWISE NOTED. TOP OF PAVEMENT ARE TP. TOP OF SIDEWALK ARE TSW.
2. SEE TYPICAL SECTIONS FOR OTHER GRADING INFORMATION.
3. ESTABLISH VERTICAL CURVES AS NECESSARY FOR A SMOOTH ALIGNMENT (NO ANGLE POINTS) BY VISUALLY ALIGNING TOP OF CURB THOUGH VERTICAL CONTROL POINTS.

10 0 10 20
SCALE IN FEET

STATE OF ALASKA 49th
Peter L. Hildre
No. CE4005
9-30-13
REGISTERED PROFESSIONAL ENGINEER

DOWL HKM
5368 Commercial Blvd.
Juneau, Alaska 99801
(907) 780-3533 Office
(907) 780-3535 Fax
Consulting Engineers • Land Surveyors • Construction Administration

JOB No. J70388	DRAWN BY: STAFF	DESIGNED BY: P. HILDRE	CHECKED BY: STAFF	DATE: SEPT. 2013

CITY/BOROUGH OF JUNEAU
ALASKA'S CAPITAL CITY
DEPARTMENT OF ENGINEERING

PIONEER AVENUE
RECONSTRUCTION, PHASE III
CONTRACT NO. E14-022

PIONEER AVENUE
HORIZONTAL AND VERTICAL CONTROL
CURB AND GUTTER LAYOUT AND GRADES
STA "P" 26+00 TO STA "P" 29+00

S:\LIB\J70388 PHASE III\050 Design Drawings\C3D\J70388 CG01.dwg 2013-9-30 12:28:01

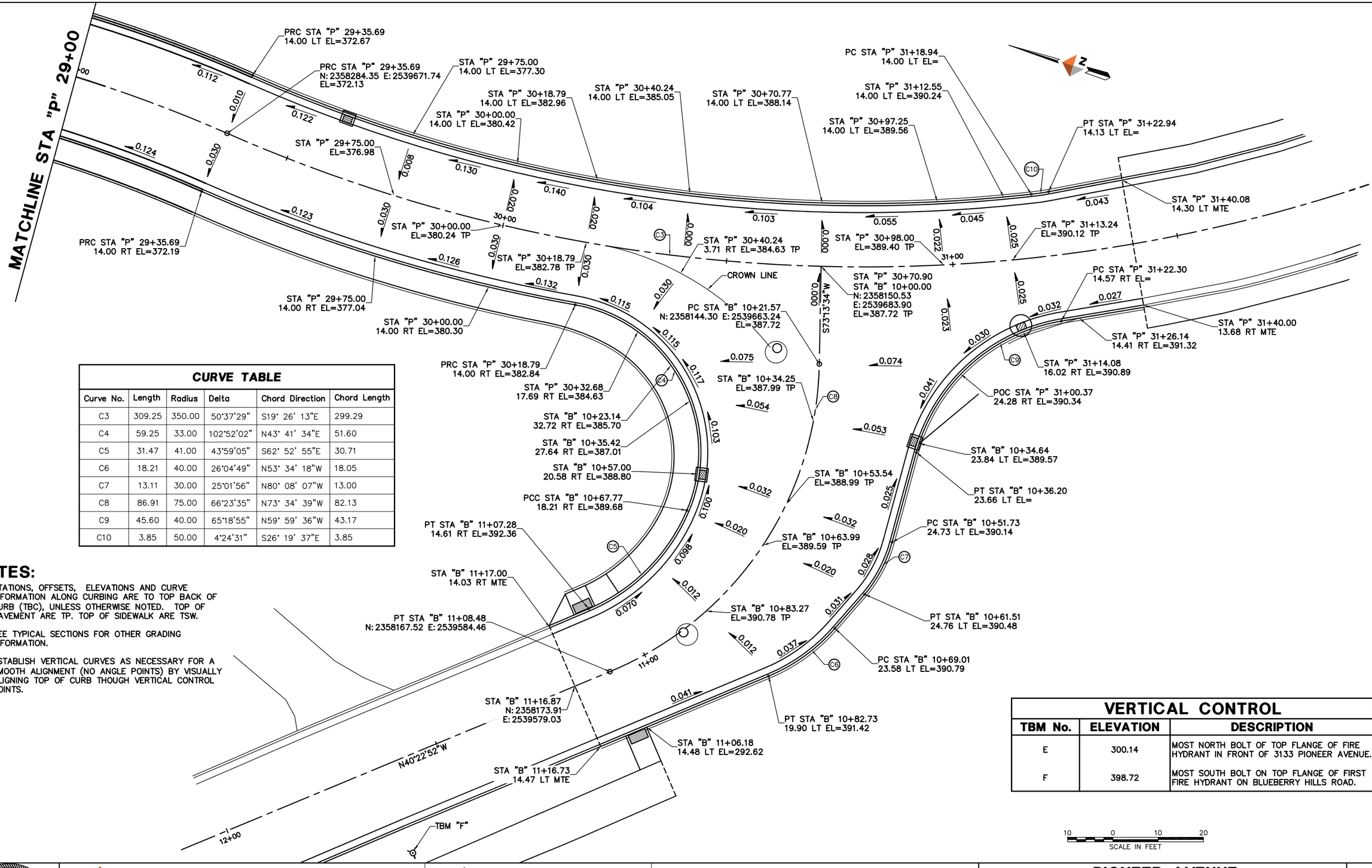

CURVE TABLE					
Curve No.	Length	Radius	Delta	Chord Direction	Chord Length
C3	309.25	350.00	50°37'29"	S19° 26' 13"E	299.29
C4	59.25	33.00	102°52'02"	N43° 41' 34"E	51.60
C5	31.47	41.00	43°59'05"	S62° 52' 55"E	30.71
C6	18.21	40.00	26°04'49"	N53° 34' 18"W	18.05
C7	13.11	30.00	25°01'56"	N80° 08' 07"W	13.00
C8	86.91	75.00	66°23'35"	N73° 34' 39"W	82.13
C9	45.60	40.00	65°18'55"	N59° 59' 36"W	43.17
C10	3.85	50.00	4°24'31"	S26° 19' 37"E	3.85

NOTES:

1. STATIONS, OFFSETS, ELEVATIONS AND CURVE INFORMATION ALONG CURBING ARE TO TOP BACK OF CURB (TBC), UNLESS OTHERWISE NOTED. TOP OF PAVEMENT ARE TP. TOP OF SIDEWALK ARE TSW.
2. SEE TYPICAL SECTIONS FOR OTHER GRADING INFORMATION.
3. ESTABLISH VERTICAL CURVES AS NECESSARY FOR A SMOOTH ALIGNMENT (NO ANGLE POINTS) BY VISUALLY ALIGNING TOP OF CURB THOUGH VERTICAL CONTROL POINTS.

VERTICAL CONTROL		
TBM No.	ELEVATION	DESCRIPTION
E	300.14	MOST NORTH BOLT OF TOP FLANGE OF FIRE HYDRANT IN FRONT OF 3133 PIONEER AVENUE.
F	398.72	MOST SOUTH BOLT ON TOP FLANGE OF FIRST FIRE HYDRANT ON BLUEBERRY HILLS ROAD.

10 0 10 20
SCALE IN FEET

STATE OF ALASKA
49th
Peter L. Hildre
No. CE4005
9-30-13
REGISTERED PROFESSIONAL ENGINEER

DOWL HKM
5368 Commercial Blvd.
Juneau, Alaska 99801
(907) 780-3533 Office
(907) 780-3535 Fax
Consulting Engineers • Land Surveyors • Construction Administration

JOB No. J70388 | DRAWN BY: STAFF | DESIGNED BY: P. HILDRE | CHECKED BY: STAFF | DATE: SEPT. 2013

CITY/BOROUGH OF JUNEAU
ALASKA'S CAPITAL CITY
DEPARTMENT OF ENGINEERING

PIONEER AVENUE RECONSTRUCTION, PHASE III CONTRACT NO. E14-022

PIONEER AVENUE HORIZONTAL AND VERTICAL CONTROL CURB AND GUTTER LAYOUT AND GRADES STA "P" 29+00 TO BLUEBERRY HILLS ROAD

SHEET NO. 11 of 18

S:\LIB\J70388 PHASE III\050 Design Drawings\C3D\J70388 CG01.dwg 2013-9-30 12:28:03

PIPE SUMMARY – STORM DRAINAGE				
PIPE	DIA	LENGTH	TYPE	SLOPE
S–1	12"	103.0	CPP	CTE
S–2	12"	26.0	CPP	0.020
S–3	12"	164.7	CPP	0.108
SEE NOTE 2				

CB–3 TYPE III	
STA "P" 21+56.9, MATCH CURB	
FG	EL=278.79
INV S–2	EL=276.29
SUMP 16"MIN	

CB–1 EXISTING TYPE III*	
STA "P" 20+42.3	
FG	EL=265.41
INV EXIST 12"CPP (IN)	EL=262.99
INV EXIST 12"CPP(OUT)	EL=262.91
INV EXIST 6"PVC	EL=262.99
*TO REMAIN	

CB–2 TYPE IV	
STA "P" 21+56.9, MATCH CURB	
FG	EL=278.79
INV S–1	EL=275.71
INV S–2	EL=275.81
INV S–3	EL=275.81
SUMP 16"MIN	

3144 CHRISTOPHER T & JUDITH M CUMMINS LOT 15 523–7902

3148 MICHAEL J & CAROL N ROSE LOT 14

3140 ADRIAN SLATER & JUSTINE EMERSON LOT 16 463–3321

3136 REECIA R WILSON & EDWARD K KIESEL LOT 17 523–8974

3151 NORMA J FLEEK LOT 14 463–3151

3145 STAN W & AMY L LUJAN LOT 15

3141 TERRY LEE WARD LOT 16 586–2563

3133 DAVID BELZAK & MITCHELL BELZAK LOT 17A

BRICK WALL
CONCRETE DRIVE
ASPHALT DRIVE
PAVED DRIVE
8"PVC
PLANTER
SEE NOTE 1
REMOVE CULVERT IN ITS ENTIRETY
EXISTING SIDEWALK (TO BE REMOVED AND NOT REPLACED)
CONTROL POINT "PA–11" (MAG NAIL) N: 2358926.03 E: 2539367.25
SEE NOTE 3
8"HDPE
10"HDPE
STA "P" 20+40.8 SAWCUT/MATCH EXISTING
8"GV
STA "P" 20+50 BEGIN FULL SUBCUT
8"DI
24"CMP
12"CPP
CB-3
CB-2
CB-1
S-1
S-2
S-3
2'±
5'
21+00
22+00
23+00
STA "P" 20+21.18 N: 2359080.29 E: 2539248.15
CPP SADDLE TEE
ROLLED CURB AND GUTTER
GRAVEL PARKING
ASPHALT DRIVE
ROCKERY STEPS
SAWCUT/MATCH EXISTING
6" PVC INV EL=268.15
BURIED INLET/ LOCATION UNKNOWN
2"GALV DRAIN
6" PVC INV EL=281.49
GRAVEL LANDSCAPING
6" PVC INV EL=289.02

NOTES:

1. PROVIDE ALL ADAPTERS, ELBOWS AND OTHER FITTINGS NECESSARY TO CONNECT TO DISSIMILAR PIPE SIZES, MATERIALS AND DEPTHS. CONNECT TO EXISTING.
2. PIPE LENGTHS ARE MEASURED ALONG THE SLOPE, FROM CENTER TO CENTER OF STRUCTURES. SLOPES ARE CALCULATED TO ENDS OF PIPE.
3. EXISTING 8"DI WATER PIPE LOCATIONS IS APPROXIMATE ONLY. THE CONTRACTOR MAY MOVE THE 10"HDPE WATER PIPE TO THE LEFT SIDE OF THE EXISTING 8"DI WATER PIPE WITH THE USE OF 45° BENDS WITH THE 10"HDPE WATER PIPE TO BE AT APPROXIMATELY 10'–6" FROM PROJECT CONTROL LINE.

10 0 10 20
SCALE IN FEET

MATCHLINE STA "P" 23+00

STATE OF ALASKA 49th Peter L. Hildre No.CE4005 9-30-13 REGISTERED PROFESSIONAL ENGINEER

DOWL HKM
5368 Commercial Blvd.
Juneau, Alaska 99801
(907) 780–3533 Office
(907) 780–3535 Fax
Consulting Engineers • Land Surveyors • Construction Administration

JOB No. J70388 | DRAWN BY: STAFF | DESIGNED BY: P. HILDRE | CHECKED BY: STAFF | DATE: SEPT. 2013

CITY/BOROUGH OF JUNEAU
ALASKA'S CAPITAL CITY
DEPARTMENT OF ENGINEERING

PIONEER AVENUE RECONSTRUCTION, PHASE III CONTRACT NO. E14-022

PLAN - PIONEER AVENUE B.O.P. TO STA "P" 23+00

SHEET NO. 12 of 18

S:\LIB\J70388 PHASE III\050 Design Drawings\C3D\J70388 PLAN.dwg 2013-9-30 12:28:05

CB-5 TYPE III	
STA "P" 23+20.7, MATCH CURB	
FG	EL=298.14
INV S-4	EL=295.64
SUMP 16" MIN	

PIPE SUMMARY – STORM DRAINAGE				
PIPE	DIA	LENGTH	TYPE	SLOPE
S-3	SEE SHEET 12			
S-4	12"	26.0	CPP	0.020
S-5	18"	11.8	CPP	0.149
S-6	18"	26.1	CPP	0.040
S-7	18"	21.8	CPP	0.111
SEE NOTE 2				

CB-7 TYPE I*	
STA "P" 25+74.4, MATCH CURB	
FG	EL=328.46
INV S-6	EL=323.47
INV S-7	EL=323.37
*CENTERED OPENING	
SUMP 16" MIN	

3132
REECIA R WILSON &
EDWARD K KIESEL
LOT 18
523-8974

LOT 1
LANCE B & SYDNEY J
YOUNGQUIST

MATCHLINE STA "P" 23+00

MATCHLINE STA "P" 26+00

ANG PT STA "P" 23+04.26
N: 2358841.41 E: 2539400.04

SEE NOTE 1

SEE NOTE 9

RECONSTRUCT WATER VAULT ACCESS STRUCTURE (SEE SHEET 6 FOR DETAILS)

SEE SHEET 6 FOR PIPE CONNECTION DETAILS

SEE NOTE 10

SEE NOTE 8

SEE NOTE 1

10"GV

10"HDPE

8"DI

8"HDPE

45° BEND

8"GV

SEE NOTE 3

10"HDPE

10"DI

24+00

25+00

8"PVC

SEE NOTE 4

SEE NOTE 1

8"DI

10"DI

6"PVC

45° BEND

SEE NOTE 9

12"CPP

6"PVC

ASPHALT DRIVE

REMOVE AND DISPOSE OF TREE

SEE NOTE 1

SALVAGE FIRE HYDRANT

STA "P" 23+14.6, 20.0 LT
INSTALL NEW FIRE HYDRANT WITH CONCRETE PAD

3133
DAVID BELZAK &
MITCHELL BELZAK
LOT 17A

CB-4 TYPE IV	
STA "P" 23+20.7, MATCH CURB	
FG	EL=298.14
INV S-3	EL=293.10
INV S-4	EL=295.16
INV 6"PVC	EL=293.20
SUMP 16" MIN	

2918
RICHARD J & PAMELA H KNAPP
2918 BLUEBERRY HILLS RD S

MH-1 EXIST TYPE I*	
STA "P" 23+66.8, 5.9 RT	
FG	EL=303.95
EXIST COVER	EL=303.68
TOP OF EXIST 24"CONE	EL=302.47
INV EXIST 8"PVC (OUT)	EL=296.79
INV EXIST 8"PVC (IN)	EL=296.84
*ADJUST MANHOLE TO GRADE.	

STA "P" 25+74.4, 34.5 LT
INV EL=321.18

18"CPP
24"CMP
SEE NOTE 5
SEE NOTE 7
CB-7

18"CPP
24"CMP
CB-6

24"CMP
18"CPP
CB-5

RECONSTRUCT DRAINAGE BASIN
(SEE DETAILS ON SHEET 7)

6"HDPE
SEE NOTE 6

STA "P" 25+72.8, 24.5 RT
INV EL=225.90

LOT 3
MYRON W KLEIN
BLUEBERRY HILLS RD

CB-6 TYPE I*	
STA "P" 25+72.8, MATCH CURB	
FG	EL=328.27
INV S-5	EL=324.45
INV S-6	EL=324.35
*CENTERED OPENING	
SUMP 16" MIN	

NOTES:

1. PROVIDE ALL ADAPTERS, ELBOWS AND OTHER FITTINGS NECESSARY TO CONNECT TO DISSIMILAR PIPE SIZES, MATERIALS AND DEPTHS. CONNECT TO EXISTING.
2. PIPE LENGTHS ARE MEASURED ALONG THE SLOPE, FROM CENTER TO CENTER OF STRUCTURES. SLOPES ARE CALCULATED TO ENDS OF PIPE.
3. RECONSTRUCT ROADWAY BETWEEN STA "P" 23+48 AND STA "P" 24+10 PER SECTION A.
4. RECONSTRUCT ROADWAY BETWEEN STA "P" 25+25 AND STA "P" 25+95 PER SECTION A.
5. RECONSTRUCT ROADWAY BETWEEN STA "P" 25+95 AND STA "P" 26+25 PER SECTION B.
6. THIS IS A TEMPORARY WATER PIPE AND WILL BE THE ONLY WATER SOURCE TO THE BLUEBERRY HILLS WATER RESERVOIR AND THE SUBDIVISION. THE SEGMENT FROM THE CONNECTION TO THE EXISTING 10"DI TO APPROXIMATE STA "P" 26+10 AND FROM APPROXIMATE STA "P" 28+88 TO THE CONNECTION TO THE EXISTING 10"DI SHALL HAVE 4 FOOT MINIMUM COVER, WITH EACH BEND COVERED WITH A MINIMUM 0.5 cu. yd. CONCRETE THRUST BLOCK. THE REMAINING SEGMENT BETWEEN APPROXIMATE STA "P" 26+10 AND STA "P" 28+88 MAY BE PLACED ALONG THE GROUND IN THE DITCH AREA. THE CONTRACTOR SHALL SECURE THE ABOVE GROUND WATER PIPE AS REQUIRED TO PREVENT MOVEMENT, AS APPROVED BY THE ENGINEER.
7. BEGIN REMOVAL OF EXISTING 10"DI WATER PIPE.
8. EXISTING 8"DI WATER PIPE LOCATIONS IS APPROXIMATE ONLY. THE CONTRACTOR MAY MOVE THE 10"HDPE WATER PIPE TO THE LEFT SIDE OF THE EXISTING 8"DI WATER PIPE WITH THE USE OF 45° BENDS WITH THE 10"HDPE WATER PIPE TO BE AT APPROXIMATELY 10'-6" FROM PROJECT CONTROL LINE.
9. INSTALL 2" SCHEDULE 40 CONDUIT WITH NEW VAULT WALL PENETRATION AND STUB OUT TO ALONG SIDE NEW VENT PIPE AND CAP AT 18" ABOVE THE GROUND. WALL PENETRATION SHALL BE LOCATED AS DIRECTED BY THE ENGINEER.
10. INSTALL A 6" GALVANIZED VENT PIPE WITH A NEW VAULT WALL PENETRATION AND LOCATE THE VENT PIPE (CANDY CANE TYPE) AT 10 FEET BEHIND BACK OF CURB. WALL PENETRATION SHALL BE LOCATED AS DIRECTED BY THE ENGINEER. SEE SHEET No. 6 FOR DETAILS.

10 0 10 20
SCALE IN FEET

STATE OF ALASKA
49th
Peter L. Hildre Jr.
No. CE 4005
9-30-13
REGISTERED PROFESSIONAL ENGINEER

DOWL HKM
5368 Commercial Blvd.
Juneau, Alaska 99801
(907) 780-3533 Office
(907) 780-3535 Fax
Consulting Engineers • Land Surveyors • Construction Administration

JOB No. J70388 | DRAWN BY: STAFF | DESIGNED BY: P. HILDRE | CHECKED BY: STAFF | DATE: SEPT. 2013

CITY/BOROUGH OF JUNEAU
ALASKA'S CAPITAL CITY
DEPARTMENT OF ENGINEERING

PIONEER AVENUE RECONSTRUCTION, PHASE III CONTRACT NO. E14-022

PLAN - PIONEER AVENUE STA "P" 23+00 TO STA "P" 26+00

SHEET NO. 13 of 18

S:\LIB\J70388 PHASE III\050 Design Drawings\C3D\J70388 PLAN.dwg 2013-9-30 12:28:07

PIPE SUMMARY – STORM DRAINAGE				
PIPE	DIA	LENGTH	TYPE	SLOPE
S–8	12"	51.2	CPP	0.059
SEE NOTE 2				

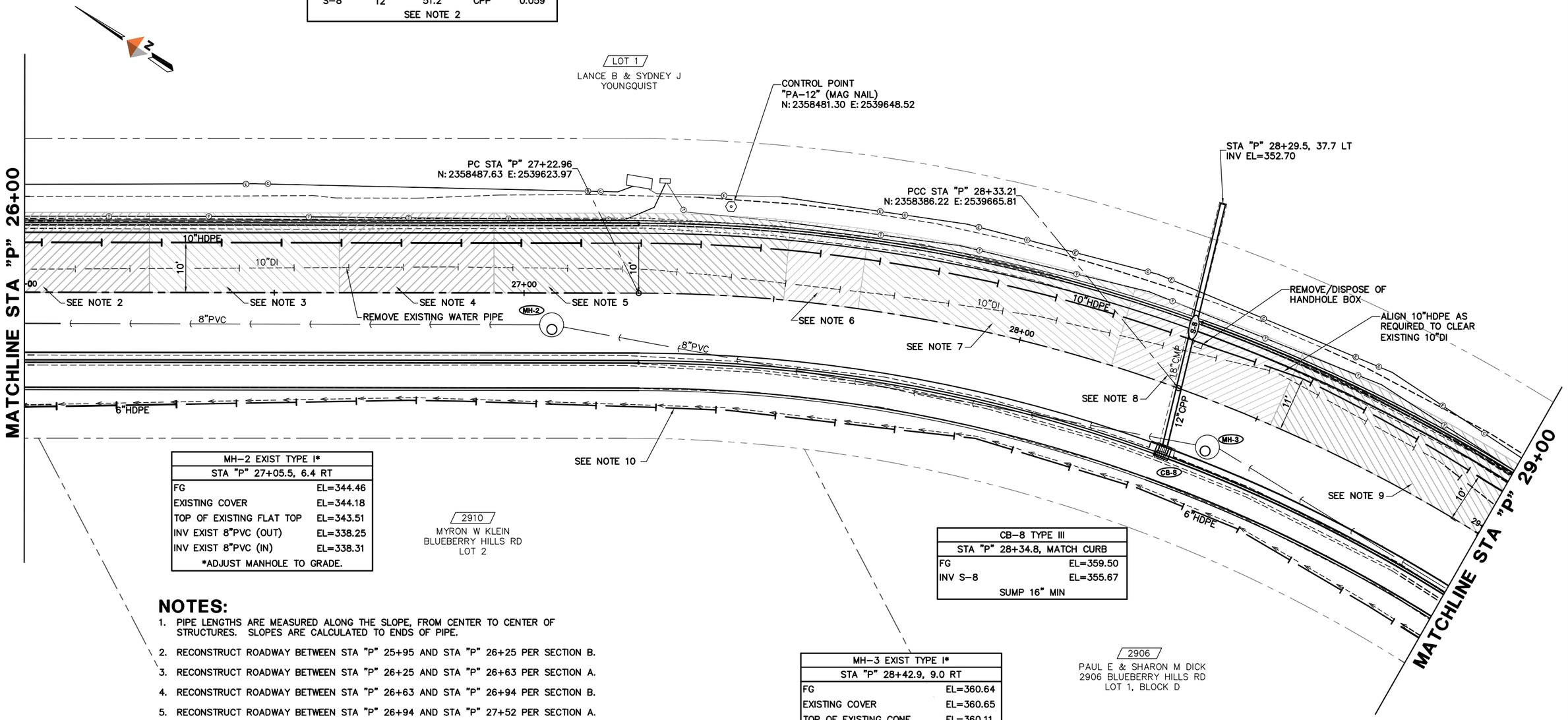

MH–2 EXIST TYPE I*	
STA "P" 27+05.5, 6.4 RT	
FG	EL=344.46
EXISTING COVER	EL=344.18
TOP OF EXISTING FLAT TOP	EL=343.51
INV EXIST 8"PVC (OUT)	EL=338.25
INV EXIST 8"PVC (IN)	EL=338.31
*ADJUST MANHOLE TO GRADE.	

CB–8 TYPE III	
STA "P" 28+34.8, MATCH CURB	
FG	EL=359.50
INV S–8	EL=355.67
SUMP 16" MIN	

MH–3 EXIST TYPE I*	
STA "P" 28+42.9, 9.0 RT	
FG	EL=360.64
EXISTING COVER	EL=360.65
TOP OF EXISTING CONE	EL=360.11
INV EXIST 8"PVC (OUT)	EL=354.73
INV EXIST 8"PVC (IN)	EL=355.29
*ADJUST MANHOLE TO GRADE. (4" HIGH FRAME)	

NOTES:

1. PIPE LENGTHS ARE MEASURED ALONG THE SLOPE, FROM CENTER TO CENTER OF STRUCTURES. SLOPES ARE CALCULATED TO ENDS OF PIPE.
2. RECONSTRUCT ROADWAY BETWEEN STA "P" 25+95 AND STA "P" 26+25 PER SECTION B.
3. RECONSTRUCT ROADWAY BETWEEN STA "P" 26+25 AND STA "P" 26+63 PER SECTION A.
4. RECONSTRUCT ROADWAY BETWEEN STA "P" 26+63 AND STA "P" 26+94 PER SECTION B.
5. RECONSTRUCT ROADWAY BETWEEN STA "P" 26+94 AND STA "P" 27+52 PER SECTION A.
6. RECONSTRUCT ROADWAY BETWEEN STA "P" 27+52 AND STA "P" 27+67 PER SECTION B.
7. RECONSTRUCT ROADWAY BETWEEN STA "P" 27+67 AND STA "P" 28+19 PER SECTION A.
8. RECONSTRUCT ROADWAY BETWEEN STA "P" 28+19 AND STA "P" 28+53 PER SECTION B.
9. RECONSTRUCT ROADWAY BETWEEN STA "P" 28+53 AND STA "P" 29+61 PER SECTION A.
10. THIS IS A TEMPORARY WATER PIPE AND WILL BE THE ONLY WATER SOURCE TO THE BLUEBERRY HILLS WATER RESERVOIR AND THE SUBDIVISION. THE SEGMENT FROM THE CONNECTION TO THE EXISTING 10"DI TO APPROXIMATE STA "P" 26+10 SHALL HAVE 4 FOOT MINIMUM COVER, WITH EACH BEND COVERED WITH A MINIMUM 0.5 cu. yd. CONCRETE THRUST BLOCK. THE REMAINING SEGMENT TO APPROXIMATE STA "P" 28+95 MAY BE PLACED ALONG THE GROUND IN THE DITCH AREA. THE CONTRACTOR SHALL SECURE THE ABOVE GROUND WATER PIPE AS REQUIRED TO PREVENT MOVEMENT, AS APPROVED BY THE ENGINEER.

10 0 10 20
SCALE IN FEET

STATE OF ALASKA – 49th – Peter L. Hildre No.CE4005 9-30-13 – REGISTERED PROFESSIONAL ENGINEER

DOWL HKM
5368 Commercial Blvd.
Juneau, Alaska 99801
(907) 780–3533 Office
(907) 780–3535 Fax
Consulting Engineers • Land Surveyors • Construction Administration

JOB No. J70388 | DRAWN BY: STAFF | DESIGNED BY: P. HILDRE | CHECKED BY: STAFF | DATE: SEPT. 2013

CITY/BOROUGH OF JUNEAU
ALASKA'S CAPITAL CITY
DEPARTMENT OF ENGINEERING

PIONEER AVENUE RECONSTRUCTION, PHASE III CONTRACT NO. E14-022

PLAN - PIONEER AVENUE STA "P" 26+00 TO STA "P" 29+00

SHEET NO. 14 of 18

S:\LIB\J70388 PHASE III\050 Design Drawings\C30\J70388 PLAN.dwg 2013-9-30 12:28:09

PIPE SUMMARY – STORM DRAINAGE				
PIPE	DIA	LENGTH	TYPE	SLOPE
S–9	12"	21.4	CPP	0.098
S–10	12"	47.7	CPP	VARIES*
S–11	18"	35.1	CPP	0.005
S–12	24"	57.2	CPP	0.029
S–13	24"	12.7	CPP	0.094

*GRADE S–10 TO PASS OVER ELECTRICAL CONDUITS WITH 12" MINIMUM COVER.

SEE NOTE 2

CB–9 TYPE IV	
STA "P" 29+59.6, MATCH CURB	
FG	EL=374.94
INV S–9	EL=370.60
SUMP 16" MIN	

MH–4 EXIST TYPE I*	
STA "P" 30+62.0, 19.3 RT	
FG	EL=386.96
EXISTING COVER	EL=386.97
TOP OF EXISTING FLAT TOP	EL=386.30
INV EXIST 8"PVC (IN–SOUTH)	EL=380.89
INV EXIST 8"PVC (IN–WEST)	EL=380.87
INV EXIST 8"PVC (OUT)	EL=380.72
*ADJUST MANHOLE TO GRADE.	

CB–10 TYPE III	
STA "B" 10+56.8, MATCH CURB	
FG	EL=388.24
INV S–10	EL=385.99
INV 6"PVC	EL=386.26
SUMP 16" MIN	

CB–12 TYPE I*	
STA "P" 31+13.9, MATCH CURB	
FG	EL=390.33
INV S–11	EL=385.50
INV S–12	EL=385.40
INV S–13	EL=385.50
*CENTERED OPENING	
SUMP 16" MIN	

CB–11 TYPE IV	
STA "B" 10+34.6, MATCH CURB	
FG	EL=389.01
INV S–10	EL=386.41
INV S–11	EL=385.66
SUMP 16" MIN	

MH–5 EXIST TYPE I*	
STA "B" 10+89.8, 1.3 LT	
FG	EL=391.14
EXISTING COVER	EL=391.17
TOP OF EXISTING FLAT TOP	EL=390.00
INV EXIST 8"PVC (OUT)	EL=386.61
INV EXIST 8"PVC (IN)	EL=386.81
*ADJUST MANHOLE TO GRADE.	

NOTES:

1. PROVIDE ALL ADAPTERS, ELBOWS AND OTHER FITTINGS NECESSARY TO CONNECT TO DISSIMILAR PIPE SIZES, MATERIALS AND DEPTHS. CONNECT TO EXISTING.
2. PIPE LENGTHS ARE MEASURED ALONG THE SLOPE, FROM CENTER TO CENTER OF STRUCTURES. SLOPES ARE CALCULATED TO ENDS OF PIPE.
3. RECONSTRUCT ROADWAY BETWEEN STA "P" 28+53 AND STA "P" 29+61 PER SECTION A.
4. LIGHT POLE TO REMAIN. POWER CONDUCTOR LOCATIONS UNKNOWN. CONTRACTOR SHALL PROVIDE LOCATES AND PROTECT.
5. THIS IS A TEMPORARY WATER PIPE AND WILL BE THE ONLY WATER SOURCE TO THE BLUEBERRY HILLS WATER RESERVOIR AND THE SUBDIVISION. THE SEGMENT FROM THE CONNECTION TO THE EXISTING 10"DI TO APPROXIMATE STA "P" 26+10 AND FROM APPROXIMATE STA "P" 28+88 TO THE CONNECTION TO THE EXISTING 10"DI SHALL HAVE 4 FOOT MINIMUM COVER, WITH EACH BEND COVERED WITH A MINIMUM 0.5 cu. yd. CONCRETE THRUST BLOCK. THE REMAINING SEGMENT BETWEEN APPROXIMATE STA "P" 26+10 AND STA "P" 28+88 MAY BE PLACED ALONG THE GROUND IN THE DITCH AREA. THE CONTRACTOR SHALL SECURE THE ABOVE GROUND WATER PIPE AS REQUIRED TO PREVENT MOVEMENT, AS APPROVED BY THE ENGINEER.
6. END REMOVAL OF 10"DI WATER PIPE.
7. LIGHTING CONDUCTOR APPEARS TO RUN TO TRANSFORMER. CONTRACTOR SHALL VERIFY LOCATION OF CONDUCTOR PRIOR TO ANY EXCAVATION WORK BETWEEN LIGHT POLE AND TRANSFORMER.

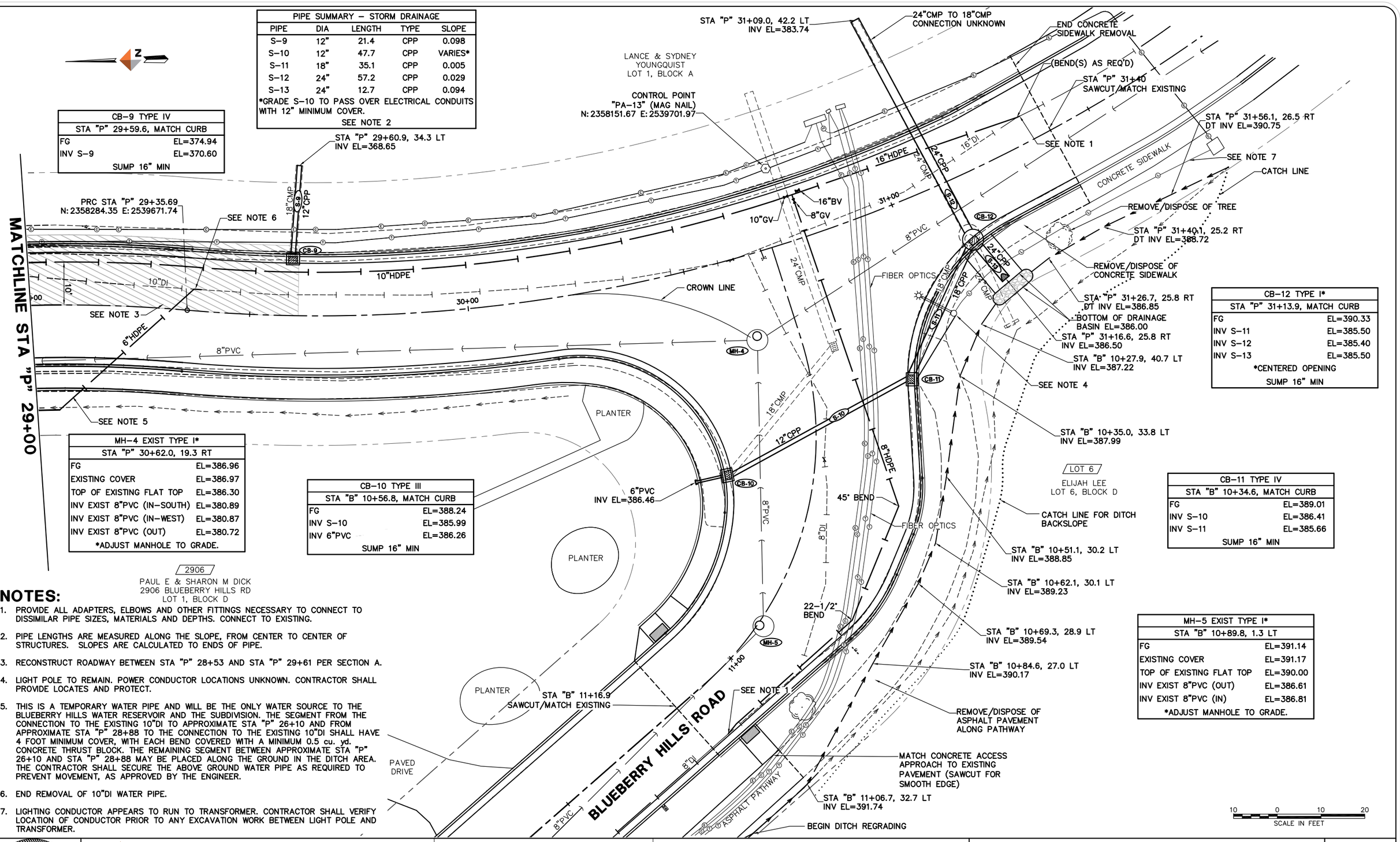

STATE OF ALASKA 49th Peter L. Hildre No.CE4005 9-30-13 REGISTERED PROFESSIONAL ENGINEER

DOWL HKM
5368 Commercial Blvd.
Juneau, Alaska 99801
(907) 780–3533 Office
(907) 780–3535 Fax
Consulting Engineers • Land Surveyors • Construction Administration

CITY/BOROUGH OF JUNEAU
ALASKA'S CAPITAL CITY
DEPARTMENT OF ENGINEERING

JOB No. J70388 | DRAWN BY: STAFF | DESIGNED BY: P. HILDRE | CHECKED BY: STAFF | DATE: SEPT. 2013

PIONEER AVENUE RECONSTRUCTION, PHASE III CONTRACT NO. E14-022

PLAN - PIONEER AVENUE STA "P" 29+00 TO BLUEBERRY HILLS ROAD

SHEET NO. 15 of 18

S:\LIB\J70388 PHASE III\050 Design Drawings\C3D\J70388 PLAN.dwg 2013-9-30 12:28:11

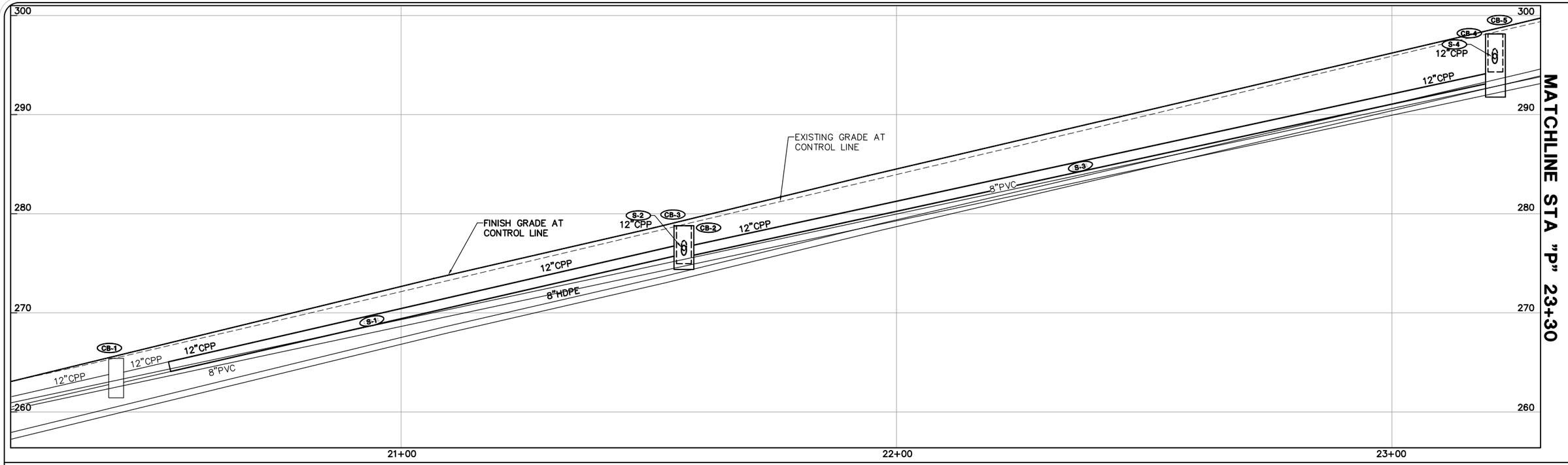

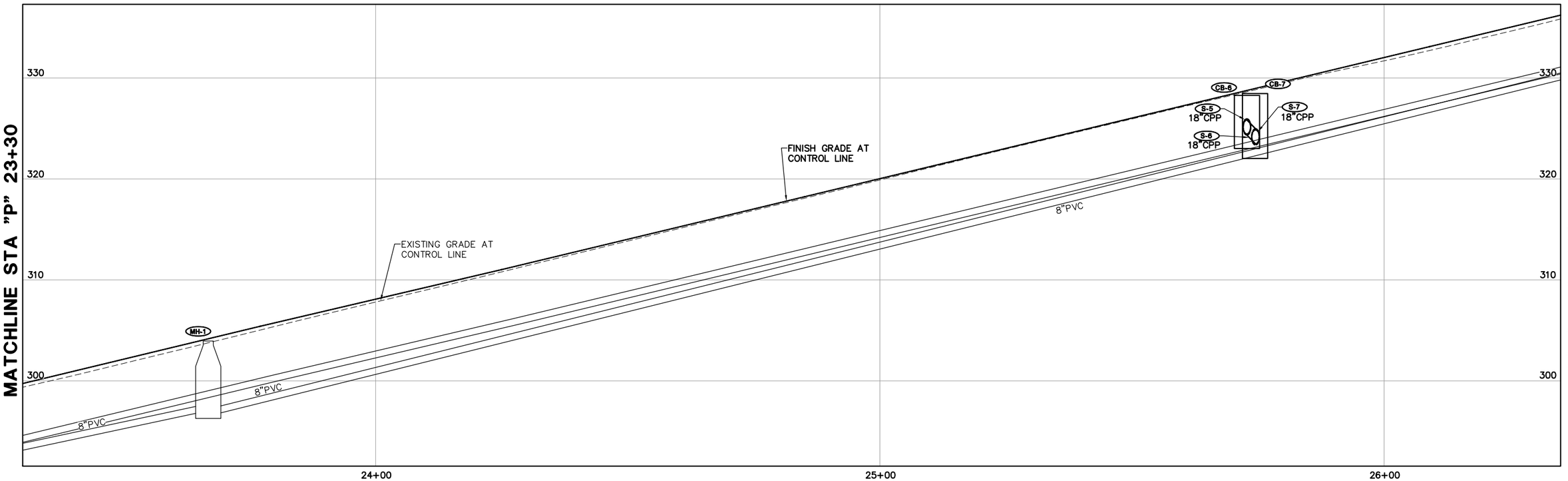

STATE OF ALASKA
49th
Peter L. Hildre
No.CE4005
9-30-13
REGISTERED PROFESSIONAL ENGINEER

DOWL HKM

5368 Commercial Blvd.
Juneau, Alaska 99801
(907) 780-3533 Office
(907) 780-3535 Fax

Consulting Engineers • Land Surveyors • Construction Administration

JOB No. J70388	DRAWN BY: STAFF	DESIGNED BY: P. HILDRE	CHECKED BY: STAFF	DATE: SEPT. 2013

CITY/BOROUGH OF JUNEAU
ALASKA'S CAPITAL CITY
DEPARTMENT OF ENGINEERING

PIONEER AVENUE RECONSTRUCTION, PHASE III CONTRACT NO. E14-022

PROFILE - PIONEER AVENUE B.O.P. TO STA "P" 26+35

SHEET NO.
16
of
18

S:\LIB\J70388 PHASE III\050 Design Drawings\C3D\J70388 PROFILE PH III.dwg 2013-9-30 12:28:13

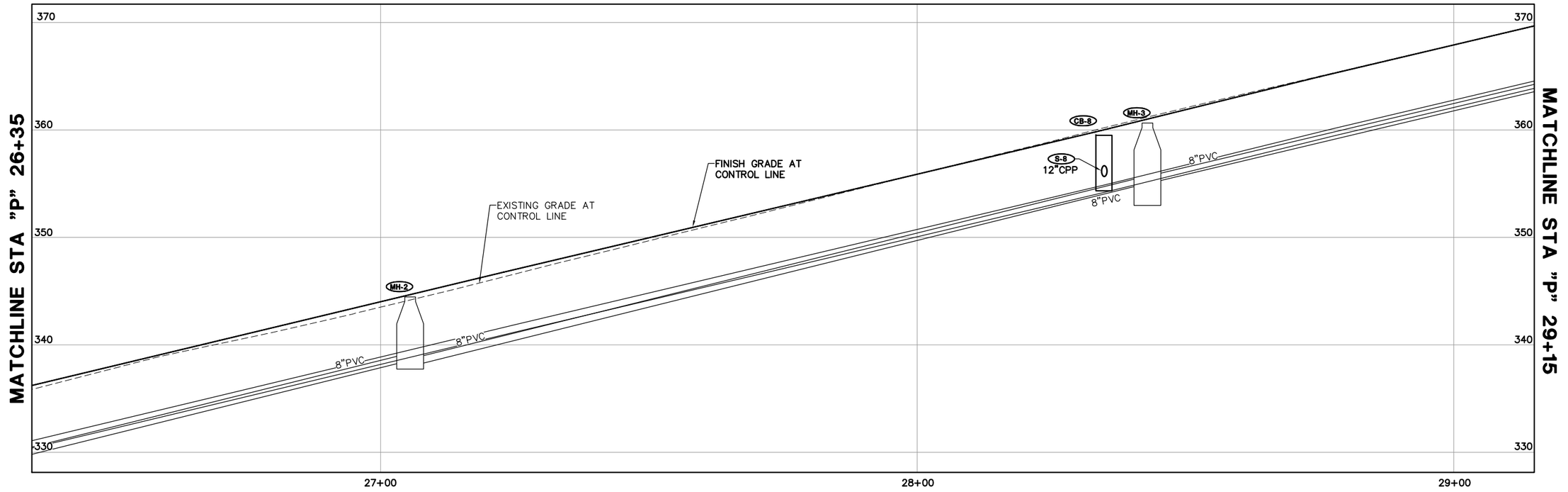

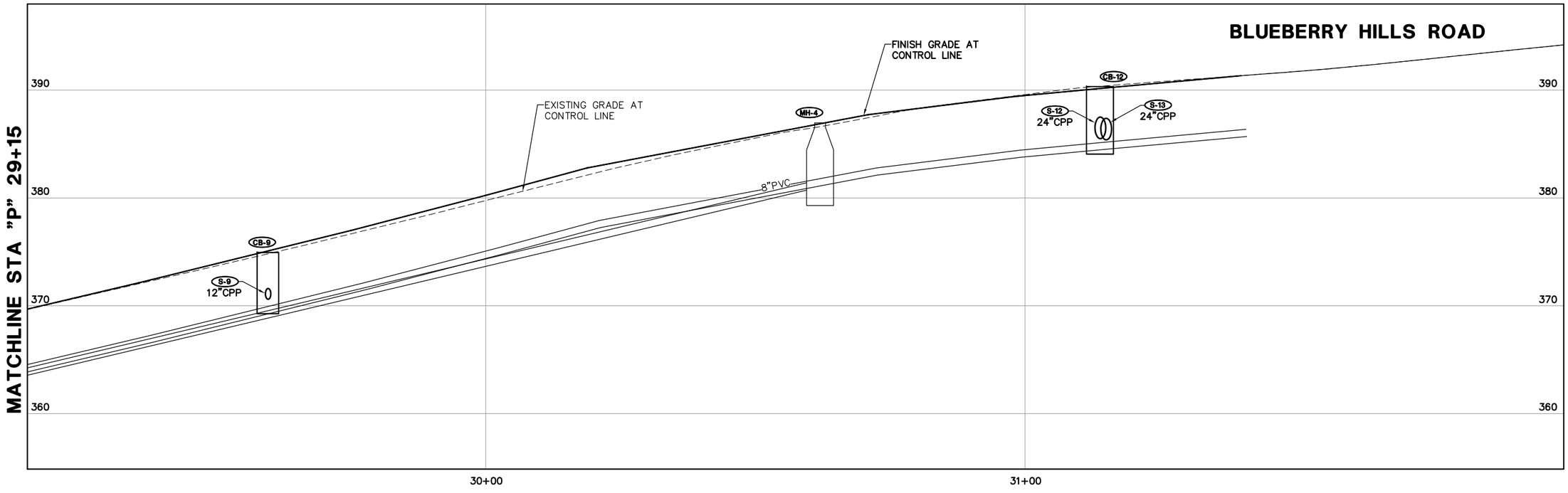

STATE OF ALASKA
49th
Peter L. Hildre
No.CE4005
9-30-13
REGISTERED PROFESSIONAL ENGINEER

DOWL HKM

5368 Commercial Blvd.
Juneau, Alaska 99801
(907) 780-3533 Office
(907) 780-3535 Fax

Consulting Engineers • Land Surveyors • Construction Administration

JOB No. J70388	DRAWN BY: STAFF	DESIGNED BY: P. HILDRE	CHECKED BY: STAFF	DATE: SEPT. 2013

CITY/BOROUGH OF JUNEAU
ALASKA'S CAPITAL CITY
DEPARTMENT OF ENGINEERING

PIONEER AVENUE RECONSTRUCTION, PHASE III CONTRACT NO. E14-022

PROFILE - PIONEER AVENUE STA "P" 26+35 TO BLUEBERRY HILLS ROAD

SHEET NO.
17
of
18

S:\LIB\J70388 PHASE III\050 Design Drawings\C30\J70388 PROFILE PH III.dwg 2013-9-30 12:28:14

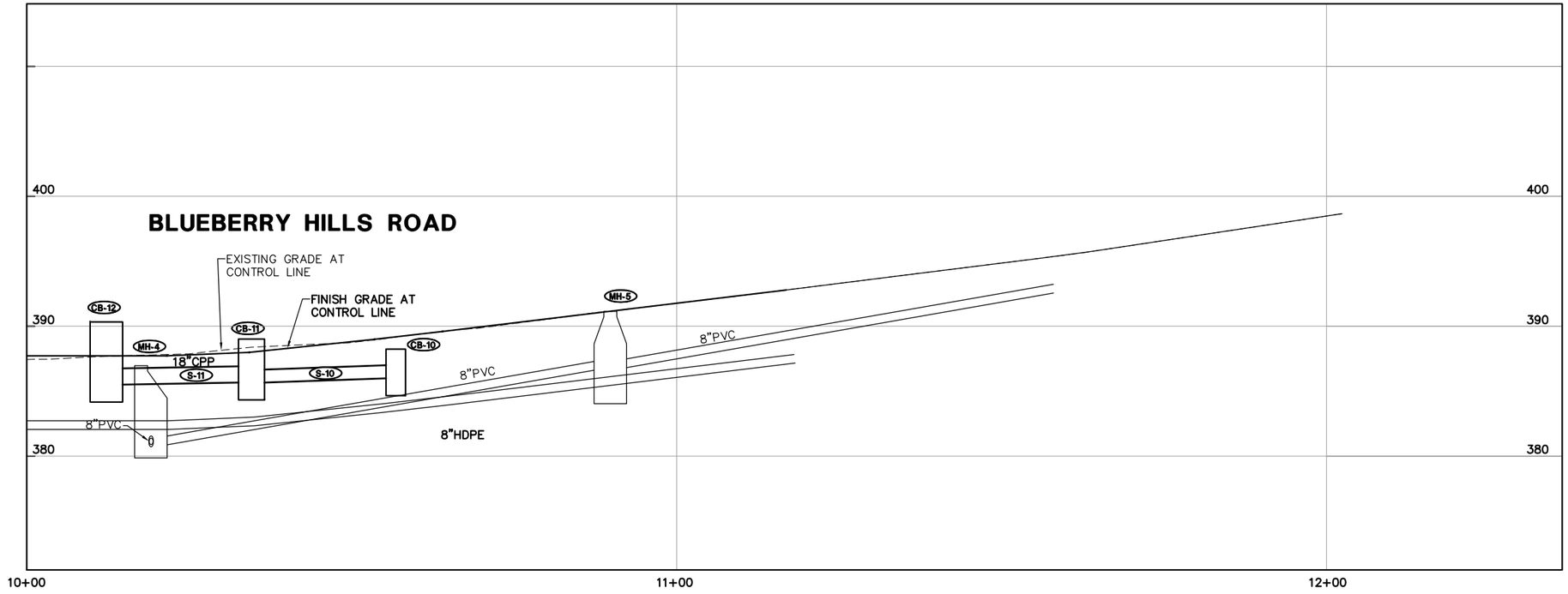

S:\LIB\J70388 PHASE III\050 Design Drawings\C3D\J70388 PROFILE PH III.dwg 2013-9-30 12:28:14

STATE OF ALASKA
191b
Peter L. Hildre
No.CE4005
9-30-13
REGISTERED PROFESSIONAL ENGINEER

DOWL HKM
5368 Commercial Blvd.
Juneau, Alaska 99801
(907) 780-3533 Office
(907) 780-3535 Fax
Consulting Engineers • Land Surveyors • Construction Administration

JOB No. J70388	DRAWN BY: STAFF	DESIGNED BY: P. HILDRE	CHECKED BY: STAFF	DATE: SEPT. 2013

CITY/BOROUGH OF JUNEAU
ALASKA'S CAPITAL CITY
DEPARTMENT OF ENGINEERING

PIONEER AVENUE RECONSTRUCTION, PHASE III
CONTRACT NO. E14-022

PROFILE - BLUEBERRY HILLS ROAD

SHEET NO. 18 of 18