ENGINEERING DEPARTMENT

ADDENDUM TO THE CONTRACT

for the

Downtown Seawalk – Miner's Cove to Franklin Dock
Contract No. E13-288

ADDENDUM NO.: **TWO**

CURRENT DEADLINE FOR BIDS:
August 13, 2013

PREVIOUS ADDENDA: **ONE**

ISSUED BY:

City and Borough of Juneau
ENGINEERING DEPARTMENT
155 South Seward Street
Juneau, Alaska 99801

PREVIOUS DEADLINE FOR BIDS:
August 7, 2013

DATE ADDENDUM ISSUED: **July 31, 2013**

The following items of the contract are modified as herein indicated. All other items remain the same. This addendum has been issued and is posted online. Please refer to the CBJ Engineering Contracts Division webpage at:
http://www.juneau.org/engineering_ftp/contracts/Contracts.php and click on the link for this project.

INFORMATION ITEM:

- A Question and Response document will be posted on the above-referenced website and updated as needed. The intent is to share contractor questions and design team responses that do not require bid document modifications. Any responses that require modification to the bid documents will be made by addendum.

PROJECT MANUAL:

Item No. 1 Section 00030 - Notice Inviting Bids. Deadline for Bids.

Change the date of the Deadline for Bids ***from*** AUGUST 7, 2013 ***to*** August 13, 2013. The time remains the same.

Item No. 2 Section 00030 – Notice Inviting Bids, Completion of Work and Section 00500 – Agreement, Article 2. ***Delete*** and ***replace*** with the following:

ARTICLE 2. CONTRACT COMPLETION TIME. Work may not begin prior to September 25, 2013* and shall be completed by the following deadlines:

Work Description	Completion Date
In-water Work	March 31, 2014
All Work, except planting	April 23, 2014
Planting	June 15, 2014

* Work between September 25, 2013 and October 1, 2013 may include access and work on the site from the water side. Mobilization may begin with access allowed for Owner's routine maintenance and close down operations, removal of the canvas canopy and maintenance of the dock. During this time, all work and mobilization must be coordinated with the CBJ and property owner. All work may commence on October 1, 2013.

Item No. 3 Section 00500 – Agreement, Article 4, Liquidated Damages. ***Delete*** and ***replace*** with the following:

ARTICLE 4. LIQUIDATED DAMAGES.

OWNER and the CONTRACTOR recognize that time is of the essence of this Agreement and that the OWNER will suffer financial loss if the WORK is not completed within the time specified in Article 2 herein, plus any extensions thereof allowed in accordance with Article 12 of the General Conditions. They also recognize the delays, expense, and difficulties involved in proving in a legal proceeding the actual damages suffered by the OWNER if the WORK is not completed on time. Accordingly, instead of requiring any such proof, the OWNER and the CONTRACTOR agree that as liquidated damages for delay (but not as a penalty) the CONTRACTOR shall pay the OWNER as indicated below for each Day that expires after the completion time specified in Article 2 herein. The amount of liquidated damages specified above is agreed to be a reasonable estimate based on all facts known as of the date of this Agreement.

Work Description	Completion Date	Liquidated Damage Amount
In-water Work	March 31, 2014	$500.00
All Work, except planting	April 23, 2014	$500.00
Planting	June 15, 2014	$200.00

SPECIAL PROVISIONS:

Item No. 4 Section 05500 – Metal Fabrications, Article 2.3, Stainless Steel Cable Railing and Accessories. **Add** paragraph D.

"D. Provide stainless steel ball end terminal posts at terminal ends at stairs. CS Johnson or Approved equal."

Item No. 5 Section 08800 – Glazing, Article 2.1 – Glass Products, General, Paragraph.B. ***Delete*** in its entirety.

DRAWINGS:

Item No. 6 Sheet A-405 Railing Details. Delete and replaced with the attached, labeled Addendum #2.

By: _____
Jennifer Mannix,
Contract Administrator

Total number of pages contained within this Addendum: 4

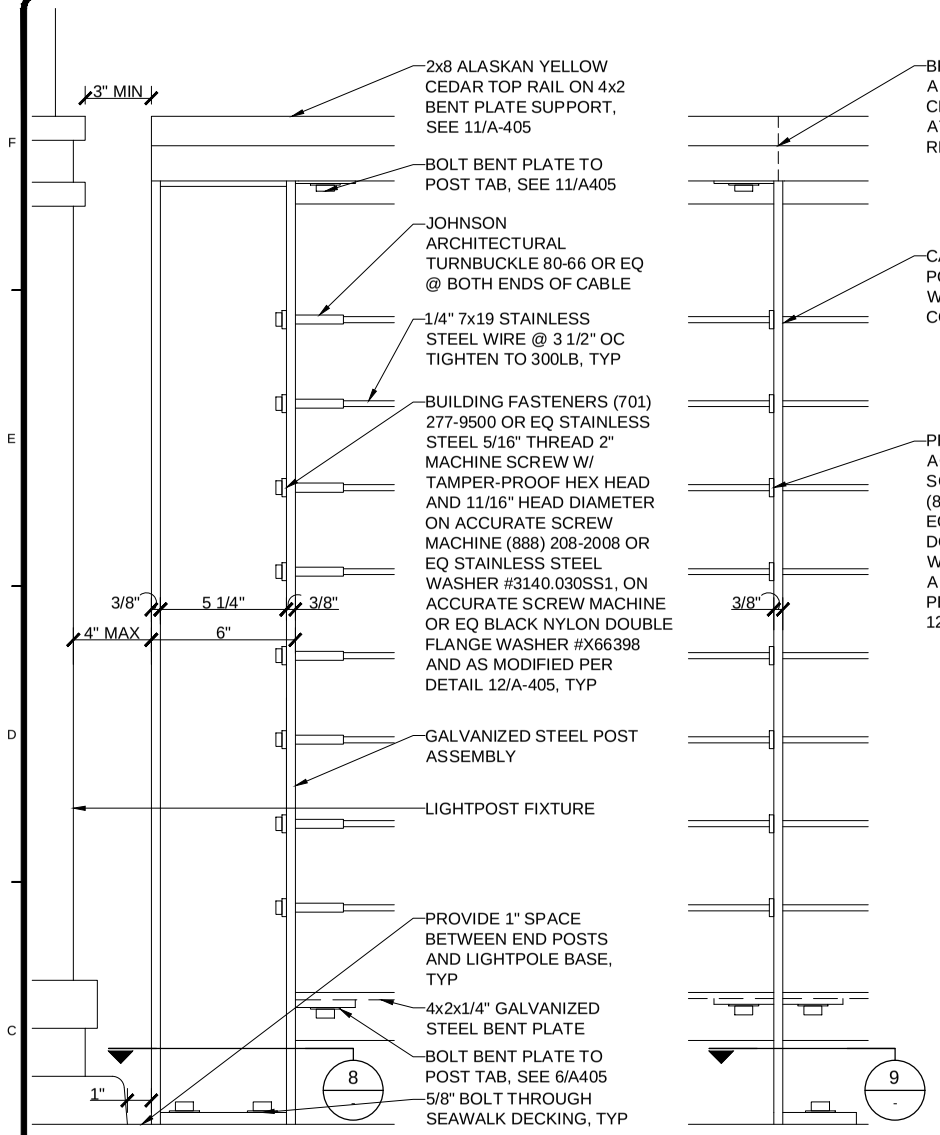

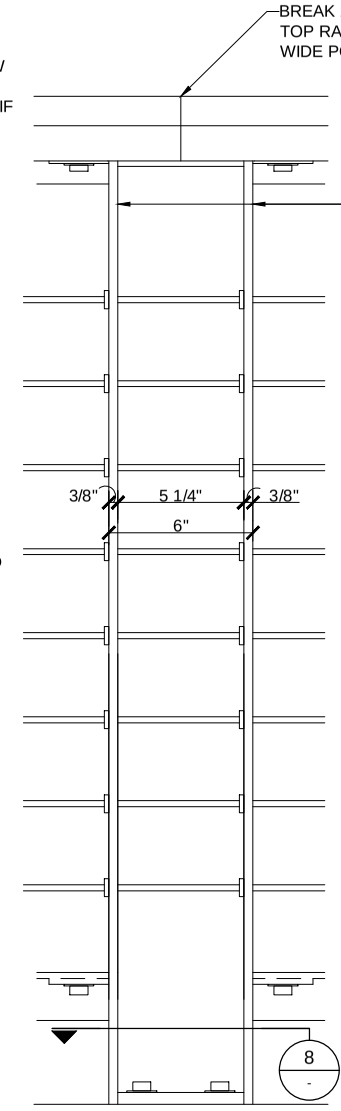

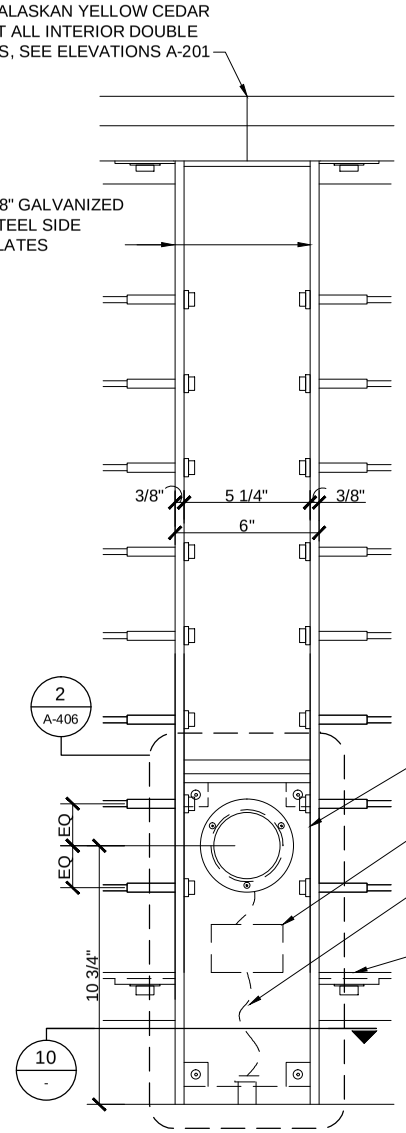

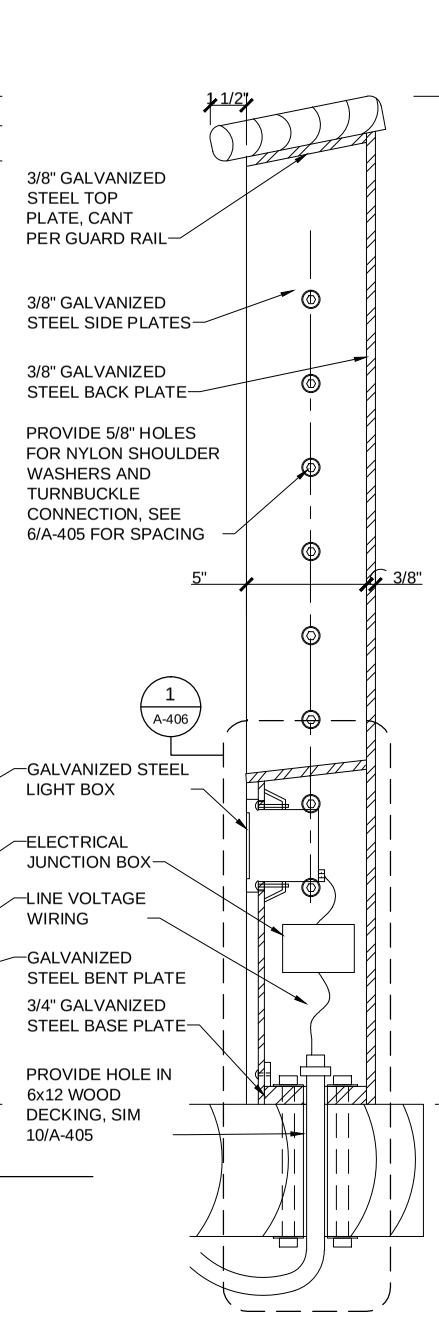

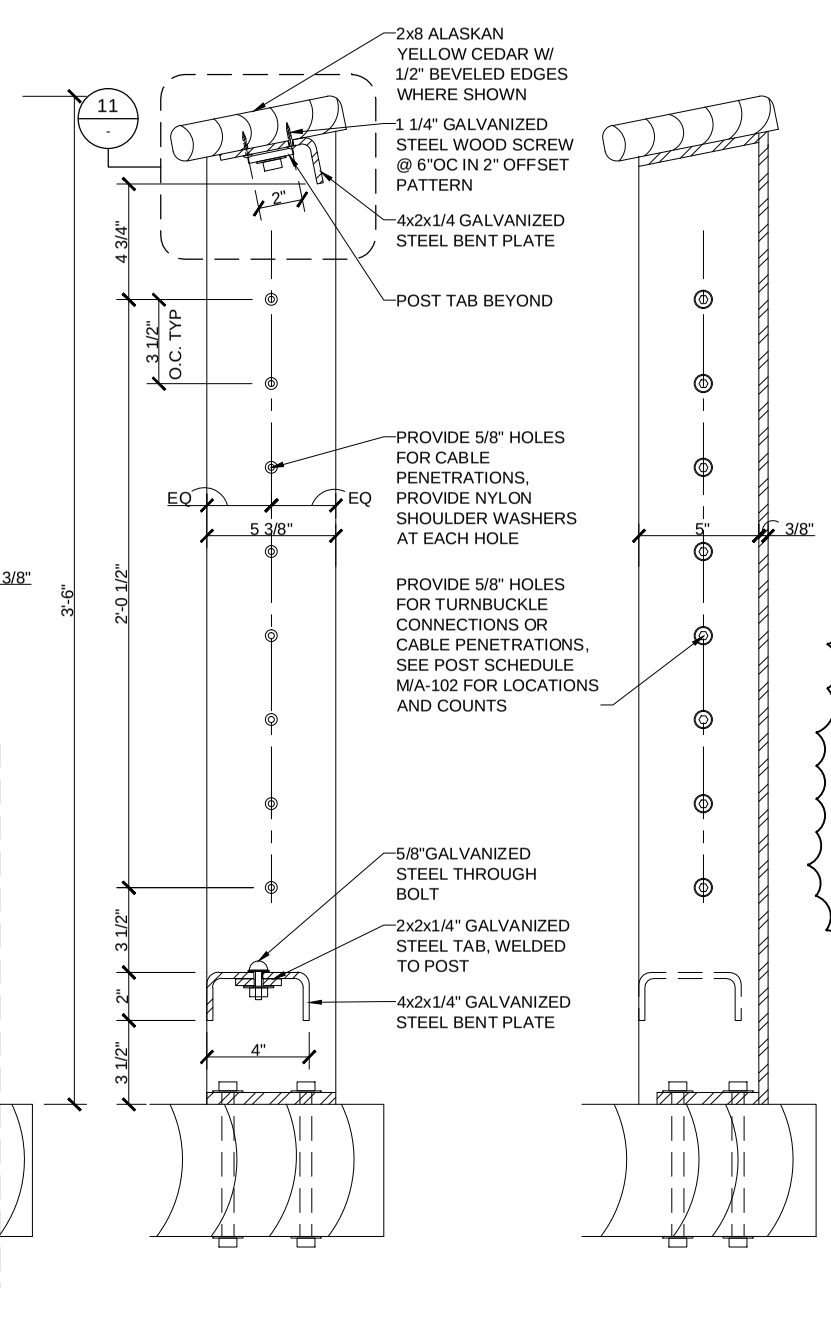

1 A-202 POST TYPE '1'
SCALE: 3"=1'-0"

2 A-202 POST TYPE '2'
SCALE: 3"=1'-0"

3 A-202 POST TYPE '3'
SCALE: 3"=1'-0"

4 A-202 POST TYPE '4'
SCALE: 3"=1'-0"

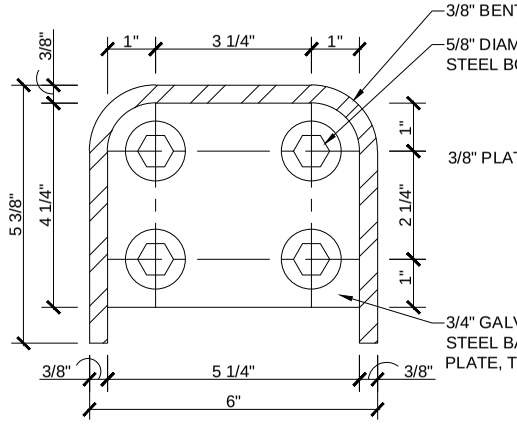

8 - POST TYPE '1' AND '3' BASE
SCALE: 6"=1'-0"

9 - POST TYPE '2' BASE
SCALE: 6"=1'-0"

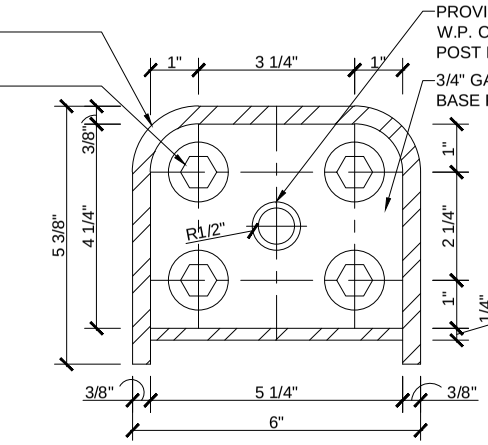

10 - POST TYPE '4' BASE
SCALE: 6"=1'-0"

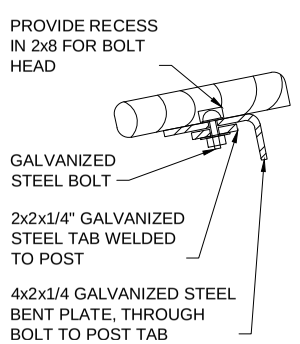

11 - TOP RAIL
SCALE: 3"=1'-0"

5 A-202 POST TYPE '4'
SCALE: 3"=1'-0"

6 A-202 POST TYPE '2'
SCALE: 3"=1'-0"

7 A-202 POST TYPE '3'
SCALE: 3"=1'-0"

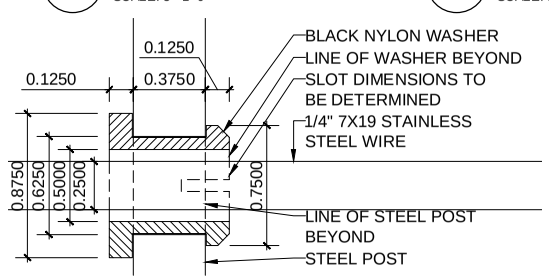

12 - DOUBLE FLANGE WASHER
SCALE: 2:1

POST NOTES:

1. PROVIDE POST TABS ONLY ON POST SIDES WITH CABLE HOLES, SEE POST SCHEDULE 1/A201.
2. HOT DIP GALVANIZE ENTIRE POST ASSEMBLY AFTER ASSEMBLY, TYP FOR ALL POST TYPES. ALL WELDS TO BE GROUND SMOOTH AND ALL METAL EDGES DEBURRED AND LIGHTLY ROUNDED PRIOR TO GALVANIZING.
3. INSTALL POSTS VERTICALLY. TOP RAIL, FOOT RAIL, AND CABLES WILL FOLLOW SLOPE OF DECK.
4. TOP AND BOTTOM BENT PLATE CONNECTIONS MUST BE MADE PRIOR TO CABLE INSTALLATION AND TIGHTENING.
5. SEE 2/A404 FOR POST POSITIONING AND REQUIRED CLEARANCES WHEN INSTALLING ADJACENT TO LIGHT POLE FIXTURE.

2

0 1" 2" 4"
SCALE: 6" = 1'-0"

0 2" 4" 8"
SCALE: 3" = 1'-0"

TETRA TECH
www.tetratech.com
230 South Franklin Street, Suite 212
Juneau, AK 99801
Tel 907.586.6400 Fax 907.463.3677

STATE OF ALASKA 49th
MARK I. NAKATANI
No. 11076
REGISTERED PROFESSIONAL ARCHITECT

BID SET

MARK	DATE	DESCRIPTION	BY
A	2012-05-24	35% DESIGN SUBMITTAL	
B	2012-08-09	65% DESIGN SUBMITTAL	
C	2013-05-01	90% DESIGN SUBMITTAL	
D	2013-06-10	BID SET	
1	2013-07-26	ADDENDA #1	
2	2013-07-31	ADDENDA #2	

CITY/BOROUGH OF JUNEAU

DOWNTOWN SEAWALK
MINER'S COVE TO FRANKLIN DOCK

RAILING DETAILS

Contract No. E13-288

Project No.:	135-12554-12002
Designed By:	MMB
Drawn By:	BAS
Checked By:	DB

A-405
Sheet 63 of 78

Copyright: Tetra Tech

Bar Measures 1 inch

7/31/2013 10:47:24 AM - S:\ACTIVE\13590008 - JUNEAU SEAWALK\SEAWALK MINER'S COVE TO ROCK DUMP\CAD\SHEETFILES\A-401-409-DETAILS.DWG - SANTHUFF, BRETT