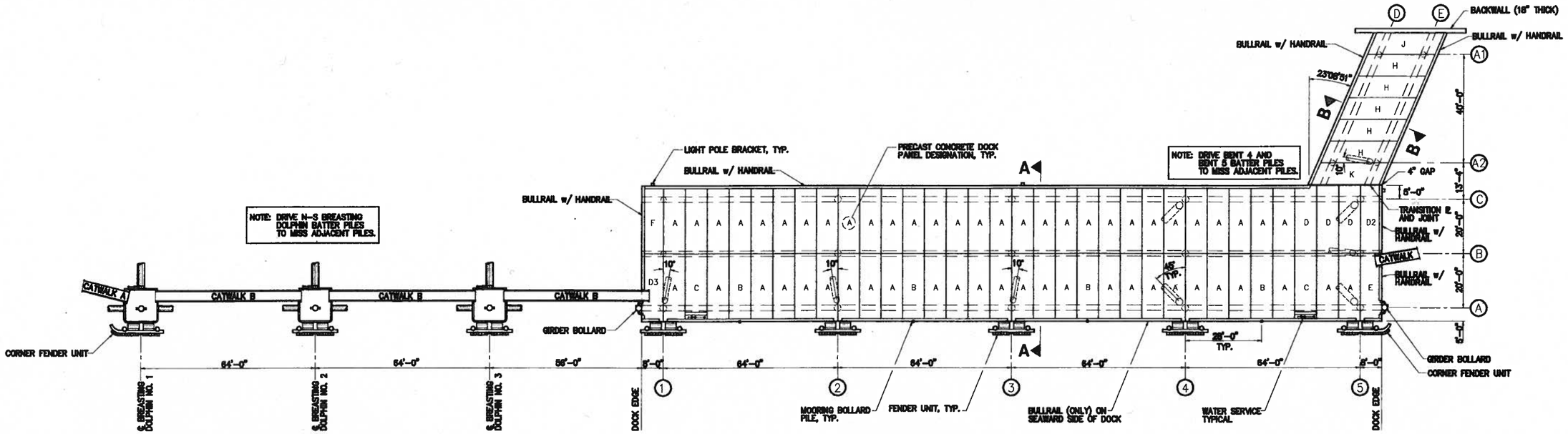

DOCK PLAN

SCALE IN FEET

0' 20' 40'

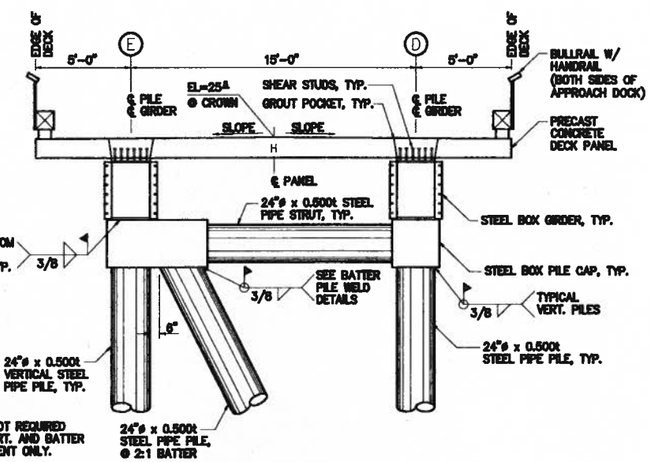

SECTION B-B

NOTE: PILE CAP SHOWN SQUARE TO GIRDERS. SEE DOCK PLAN FOR REQUIRED ORIENTATION.

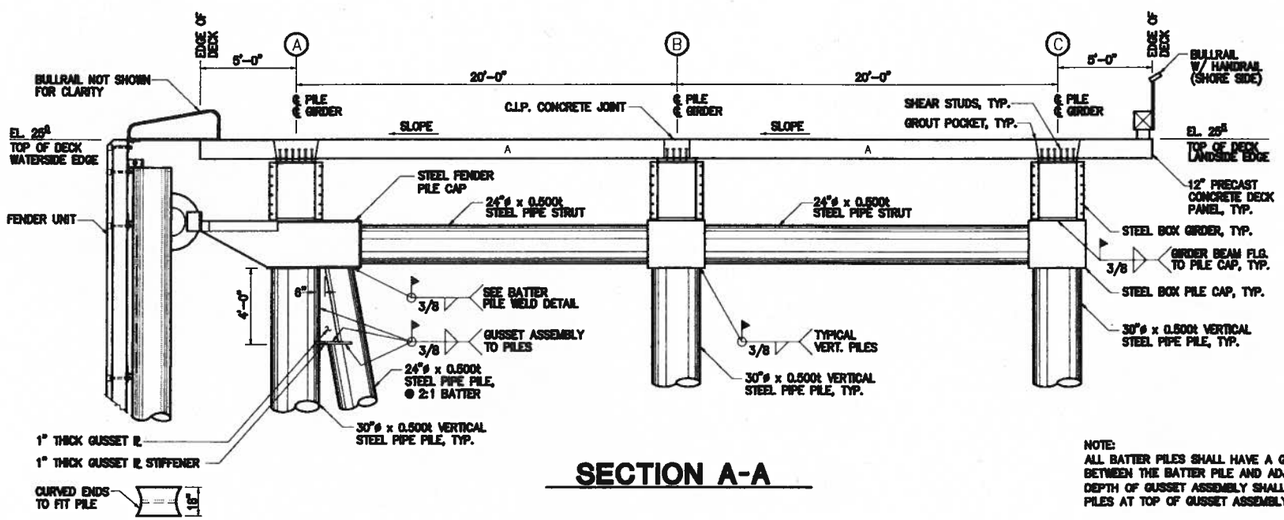

SECTION A-A

NOTE:
ALL BATTER PILES SHALL HAVE A GUSSET PLATE AND GUSSET PLATE STIFFENER WELDED BETWEEN THE BATTER PILE AND ADJACENT VERTICAL PILE, UNLESS OTHERWISE NOTED. DEPTH OF GUSSET ASSEMBLY SHALL BE 4 FEET MIN. WITH (4" MIN./8"MAX.) SPACE BETWEEN PILES AT TOP OF GUSSET ASSEMBLY.

FOR CONSTRUCTION

SOUTH FRANKLIN CRUISE DOCK

Designed: CG/JD
Drawn: TMS
Checked:
Project No: 95233.01

Peratrovich, Nottingham & Drage, Inc.
Engineering Consultants
2320 Hospital Drive, Suite 200
Juneau, Alaska 99801 (907) 586-2086 FAX (907) 586-2089

Date: SEPT. 1995
Scale: AS NOTED

DOCK PLAN AND SECTIONS

sheet 4 of 23

Peratrovich, Nottingham and Drage, Inc. (PN&D) is not responsible for safety programs, methods or procedures of operation, or the construction of the design shown on these drawings. Drawings are for the use of this project only and are not intended for reuse without written approval from PN&D. Drawings are also not to be used in any manner that would constitute a detriment directly or indirectly to Peratrovich, Nottingham and Drage, Inc.

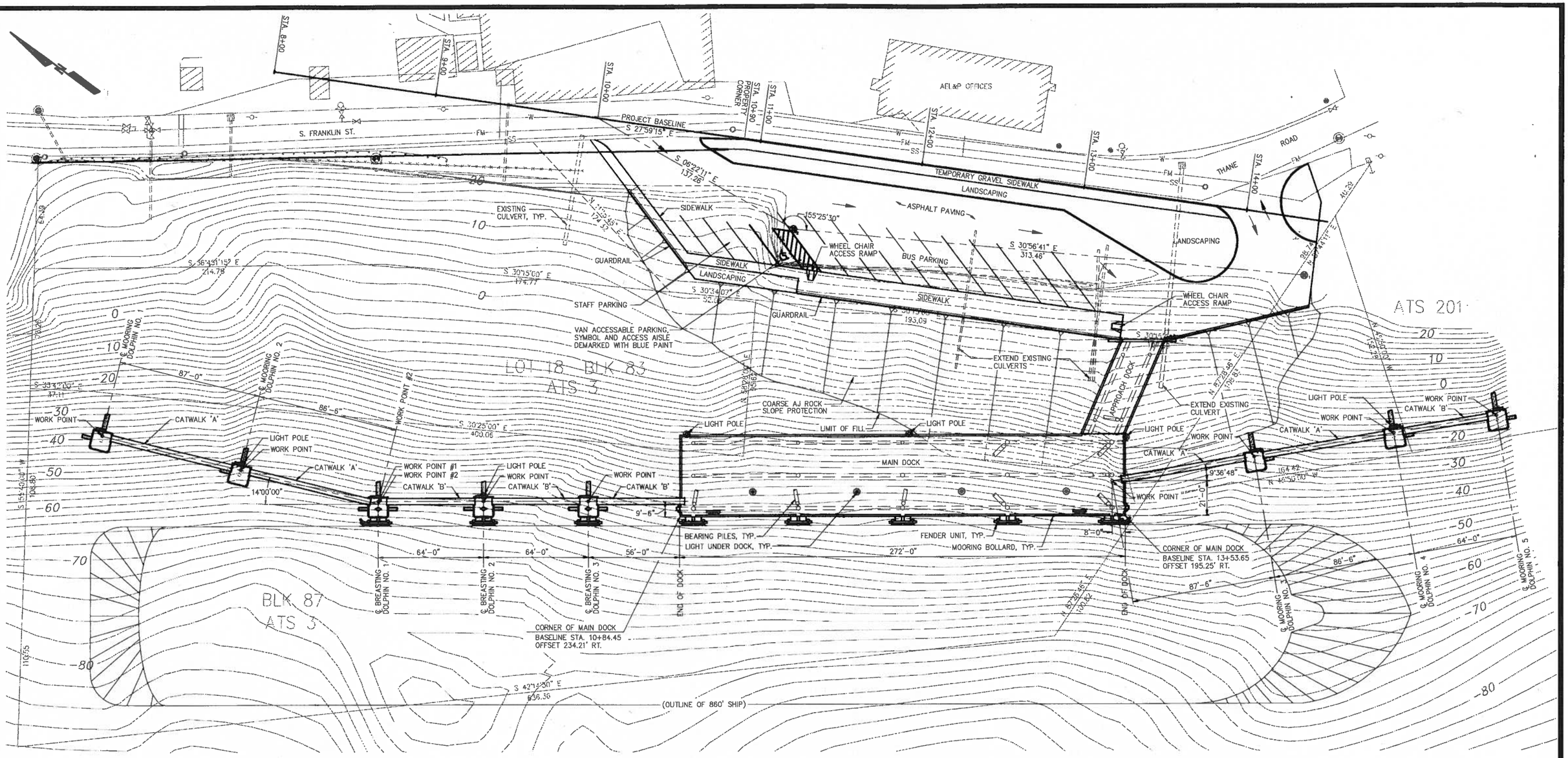

LEGEND

- EXISTING FIRE HYDRANT W/VALVE
- EXISTING WATER VALVE
- EXISTING MANHOLE
- EXISTING CATCH BASIN
- BRASS MONUMENT, D.O.T.: R.O.W.
- MONUMENT: CAP ON REBAR
- EXISTING POWER POLE
- PN&D CONTROL POINT (AND NO.)
- NEW DOCK LIGHTING LOCATION
- NEW DOCK LIGHTING LOCATION (BENEATH DECK)
- EXISTING FENCE
- EXISTING CONTOUR
- EXISTING GUARDRAIL
- EXISTING SANITARY SEWER
- EXISTING FORCE MAIN SEWER
- EXISTING WATER MAIN
- EXISTING PROPERTY LINE

OVERALL SITE PLAN

SCALE IN FEET
0' 30' 60'

Peratrovich, Nottingham and Drage, Inc. (PN&D) is not responsible for safety programs, methods or procedures of operation, or the construction of the design shown on these drawings. Drawings are for the use of this project only and are not intended for reuse without written approval from PN&D. Drawings are also not to be used in any manner that would constitute a detriment directly or indirectly to Peratrovich, Nottingham and Drage, Inc.

FOR CONSTRUCTION

SOUTH FRANKLIN CRUISE DOCK

Designed: CG/JD
Drawn: TMS
Checked: TN/DS
Project No: 95233.01

Peratrovich, Nottingham & Drage, Inc.
Engineering Consultants
8320 Hospital Drive, Suite 200
Juneau, Alaska 99801 (907) 586-2093 FAX (907) 586-2099

Date: SEPT. 1995
Scale: AS SHOWN

OVERALL SITE PLAN

sheet 2 of 23

Peratrovich, Nottingham & Drage, Inc.
Engineering Consultants
1506 West 36th Avenue Suite 101, ANCH. AK 99503
(907) 561-1011

PILE DRIVING RECORD

PROJECT NO. 95233.02

TIP ELEV.	PENETR. (FT.)	BLOWS/ FT.	NOTES
-20.1	0	START VIBRO	11:33am 36'WL
	6		5'/min
1/4 TURN	22		
1/4 TURN	32	STOP VIBRO	11:45am 68'WL
-49.2	32	START IMPACT	12:38pm 65'WL
		13	
		23	44B/m
	35	26	
		30	
		29	44B/m
		31	
		35	
	40	32	
		29	
		37	42B/m
		30	
		35	42B/m
1/4 TURN	45	45	
		56	
		71	41B/m
		62	
		65	42B/m
	50	68	

TIP ELEV.	PENETR. (FT.)	BLOWS/ FT.	NOTES
		49	40B/m
		56	38B/m
		40	
		47	
1/4 TURN	55	53	
		54	
		48	46B/m
		57	
	59	89	
-74.6		STOP IMPACT	1:10pm 92'WL

PILE LOCATION 3MBE
DATE DRIVEN 2-29-96
PILE TYPE 24" x .5"
TIP TYPE SF W/CT
HAMMER TYPE DELMAG D30-1
RATED ENERGY 66100 FT#
FOREMAN ED BEAN
EST. BERING CAP. ____
INITIAL LENGTH (S) 120'
CUTOFF LENGTH (S) 14
FINAL LENGTH 106
CUTOFF ELEV. 22
TIP ELEV. -74.6
COMMENTS
1/4" OR LESS REBOUND

INSPECTOR: JN

Peratrovich, Nottingham & Drage, Inc.
Engineering Consultants
1506 West 36th Avenue Suite 101, ANCH. AK 99503
(907) 561-1011

PILE DRIVING RECORD

PROJECT NO. 95233.02

TIP ELEV.	PENETR. (FT.)	BLOWS/ FT.	NOTES
-29	0	START VIBRO	8:36 am 41' WL
	15		
-46	17	STOP VIBRO	8:39 am 58' WL
-46	17		
	18	5	
		10	
	20	14	
		13	
		14	
		20	
		31	
	25	28	
		36	
		32	
		35	44 B/m
		32	
	30	32	
		36	
TURN		30	
		22	
		23	
	35	21	
		18	
		18	
		17	
		16	
	40	16	
		14	46 B/m
		15	
		15	
		15	
	45	18	
		18	
		19	
		16	
		29	
	50	31	
		29	
		24	
		28	48 B/m
		34	
	55	38	
		39	
		47	44 B/m
		49	
-82	60	54	48 B/m
	64	STOP IMPACT	

PILE LOCATION 3MU
DATE DRIVEN 2-29-96
PILE TYPE 24"x.5"
TIP TYPE SF W/CT
HAMMER TYPE DELMAG 30
RATED ENERGY 66100 FT#
FOREMAN ED BEAN
EST. BERING CAP. ____
INITIAL LENGTH (S) 146
CUTOFF LENGTH (S) 21
FINAL LENGTH 119
CUTOFF ELEV. 22
TIP ELEV. -83
COMMENTS
1/4" OR LESS REBOUND
INSPECTOR: JEN

Peratrovich, Nottingham & Drage, Inc.
Engineering Consultants
1506 West 36th Avenue Suite 101, ANCH. AK 99503
(907) 561-1011

PILE DRIVING RECORD

PROJECT NO. 95233.02

TIP ELEV.	PENETR. (FT.)	BLOWS/ FT.	NOTES
-343	0	START VIBRO VERTICAL	2:40pm 38'WL
	3	LAY PILE OVER	
	10		6.5'/min
TURN	13		
TURN	22		
TURN	31		8'/min
	36		3'/min
-68	38	STOP VIBRO	2:47pm 80'WL
-68.4	38	START IMPACT	3:20pm 79'WL
		26	
	40	26	44B/m
		25	
		32	44B/m
		31	
	44	42	
		40	
		55	44B/m
1/4 TURN		50	
		46	44B/m
		51	
	50	50	
		48	46B/m
		48	

TIP ELEV.	PENETR. (FT.)	BLOWS/ FT.	NOTES
-42		62	
		49	
	55	49	
		59	
		60	
		62	44B/m
	59	75	
-92		STOP IMPACT	4:07pm 105'WL

PILE LOCATION 3MBS
DATE DRIVEN 2-29-96
PILE TYPE 24"x.5"
TIP TYPE SF W/ CT
HAMMER TYPE DELMAG D30-13
RATED ENERGY 66100 FT#
FOREMAN ED BEAN
EST. BERING CAP. ____
INITIAL LENGTH (S) 140
CUTOFF LENGTH (S) 22.5
FINAL LENGTH 117.5
CUTOFF ELEV. -22
TIP ELEV. -92
COMMENTS
1/4" OR LESS REBOUND

INSPECTOR: JN

Peratrovich, Nottingham & Drage, Inc.
Engineering Consultants
1506 West 36th Avenue Suite 101, ANCH. AK 99503
(907) 561-1011

PILE DRIVING RECORD

PROJECT NO. 95233.02

TIP ELEV.	PENETR. (FT.)	BLOWS/ FT.	NOTES
-25	0	START VIBRO	7:55am WL38'
1/4 TURN	17		
1/4 TURN	25		8'/min
1/4 TURN	32		
	39		6'/min
-70	45	STOP VIBRO	8:07am WL83'
-70	45	START IMPACT	8:20am WL83.6
	45'-6	10	
		22	
		21	44 B/m
		26	
2" 1" rebound	50'-6	29	
		35	
		30	52 B/m
		28	
		28	52 B/m
	55'-6	40	
1/2"-1" Rebound		36	
		36	52 B/m
		29	
		30	
	60'-6	41	
		38	

TIP ELEV.	PENETR. (FT.)	BLOWS/ FT.	NOTES
		50	48 B/m
		51	
		57	47 B/m
	65'-6	58	
		63	
		69	47 B/m
-95	69'-6	63	44 B/m
		STOP IMPACT	WL106 9:10am

PILE LOCATION 4MV
DATE DRIVEN 2/28/96
PILE TYPE 24"x.5"
TIP TYPE SF W/CT
HAMMER TYPE DELMAG D30-1
RATED ENERGY 66100FT#
FOREMAN ED BEAN
EST. BERING CAP.
INITIAL LENGTH (S) 140'
CUTOFF LENGTH (S) 23
FINAL LENGTH 117
CUTOFF ELEV. 22
TIP ELEV. -95
COMMENTS

INSPECTOR: JN

Peratrovich, Nottingham & Drage, Inc.
Engineering Consultants
1506 West 36th Avenue Suite 101, ANCH. AK 99503
(907) 561-1011

LE DRIVING RECORD

PROJECT NO. 95233.02

TIP ELEV.	PENETR. (FT.)	BLOWS/ FT.	NOTES
		START VIBRO	10:52am
-23	0		WL 34'
1/4 TURN	16		
		STOP VIBRO	10:56am
-36.8	23		WL 57
	23	START IMPACT	11:25am
			WL 56
	24	28	
	25	24	40 B/m
		21	
		29	
		28	
		26	40 B/m
	30	29	
		54	
		47	
		51	
		52	
	35	50	38 B/m
		42	
		53	
		54	38 B/m
1/4 TURN		73	
	40	101	
		90	
		72	40 B/m

TIP ELEV.	PENETR. (FT.)	BLOWS/ FT.	NOTES
		82	
		83	
-56.6	45	85	40 B/m
		STOP IMPACT	12 PM
			WL 78

PILE LOCATION 4MBE

DATE DRIVEN 2/28/96

PILE TYPE 24"x.5"

TIP TYPE SE W/CT

HAMMER TYPE DELMAG D30

RATED ENERGY 66 100 FT

FOREMAN ED BEAN

EST. BERING CAP. _____

INITIAL LENGTH (S) 120

CUTOFF LENGTH (S) 26

FINAL LENGTH 94

CUTOFF ELEV. 22

TIP ELEV. -56.6'

COMMENTS

1/4" OR LESS REBOND

BATTER < 2:1 ~1.5:1 DUE TO OBSTACLE

INSPECTOR: JN

Peratrovich, Nottingham & Drage, Inc.
Engineering Consultants
1506 West 36th Avenue Suite 101, ANCH. AK 99503
(907) 561-1011

PILE DRIVING RECORD

PROJECT NO. 95233.02

TIP ELEV.	PENETR. (FT.)	BLOWS/ FT.	NOTES
-26	0	START VIBRO VERTICAL	2:30pm 29' WL
	5	LAY PIPE OVER	
¼ TURN	13		
	23		5'/min
¼ TURN	25		
	28		5'/min
-50.7	28	STOP VIBRO	2:41pm WL 60
-50.7	28	START IMPACT	3:21pm WL 60
		18	
	30	10	
		10	
		15	
		25	44 B/m
		31	42 B/m
	35	30	
		30	
		39	
		53	44 B/m
		60	
	40	57	44 B/m
		60	
		66	
1" - ½" Rebound		51	42 B/m

TIP ELEV.	PENETR. (FT.)	BLOWS/ FT.	NOTES
¼ TURN		50	
	45	47	41 B/m
		51	
		42	
		44	
		46	42 B/m
	50	43	
		42	46 B/m
		42	
		45	
		33	
	55	37	42 B/m
		32	
		34	42 B/m
		42	
		44	
	60	51	
		50	
-81.1	62	62	40 B/m
		STOP IMPACT	4:02pm WL 94

PILE LOCATION 4MBS
DATE DRIVEN 2/28/96
PILE TYPE 24" x .5"
TIP TYPE SF W/CT
HAMMER TYPE DELMAG D30-
RATED ENERGY 66100FT#
FOREMAN ED BEAN
EST. BERING CAP.
INITIAL LENGTH (S) 140'
CUTOFF LENGTH (S) 24
FINAL LENGTH 116
CUTOFF ELEV. 22
TIP ELEV. -81.1
COMMENTS
2:1

INSPECTOR: JN

Peratrovich, Nottingham & Drage, Inc.
Engineering Consultants
1506 West 36th Avenue Suite 101, ANCH. AK 99503
(907) 861-1011

PILE DRIVING RECORD

PROJECT NO. 95233.02

TIP ELEV.	PENETR. (FT.)	BLOWS/ FT.	NOTES
-30	0	START VIBRO	?NOT CALLED
-60	30	STOP VIBRO	11:30am WL 73'
-60	30	START IMPACT	11:45am WL 73'
		16	
		16	
		18	
		17	
	35	19	
		17	44 B/m
		23	
		21	
		23	
	40	21	
		24	
		27	
		30	
1/4 TURN		43	
	45	44	
		70	46 B/m
		51	44 B/m
		46	
		40	40 B/m
	50	49	

TIP ELEV.	PENETR. (FT.)	BLOWS/ FT.	NOTES
		47	
1/4 TURN		47	48 B/m
		48	
1" Rebound		51	
	55	46	
		42	48 B/m
		49	
		40	
		41	
	60	43	
-88.3	61	68	40 B/m
		STOP IMPACT	11:53am WL 100

PILE LOCATION M5BS

DATE DRIVEN 2-27-96

PILE TYPE 24" x .5"

TIP TYPE SF W/ CT

HAMMER TYPE DELMAG 307

RATED ENERGY 46,100 FT-LB

FOREMAN ED BEAN

EST. BERING CAP. _____

INITIAL LENGTH (S) 140'

CUTOFF LENGTH (S) 16

FINAL LENGTH 124

CUTOFF ELEV. 22

TIP ELEV. -88.3

COMMENTS

BATER 2.25:1

TO MISS

BARGE DOLPHINS

INSPECTOR: JW

Peratrovich, Nottingham & Drage, Inc.
Engineering Consultants
1506 West 36th Avenue Suite 101, ANCH. AK 99503
(907) 561-1011

PILE DRIVING RECORD

PROJECT NO. 95233.02

TIP ELEV.	PENETR. (FT.)	BLOWS/ FT.	NOTES
-12	0	ALREADY BATTERED START VIBRO	1:58pm WL 17'
	11		10'/min
1/4 TURN	16		
	30		6.5'/min
1/4 TURN	31		
-41.5	33	STOP VIBRO	2:05pm WL 53
	34	16	
	35	13	
		19	
		28	
		38	
		59	40B/m
	40	48	
		36	40B/m
		40	
		55	40B/m
		36	
	45	59	
		42	42B/m
		58	
		49	
		75	
1/4 TURN	50	63	

TIP ELEV.	PENETR. (FT.)	BLOWS/ FT.	NOTES
1/4" Rebound.		67	
		61	
		69	
		70	
	55	54	43B/m
		46	44B/m
		40	40B/m
		49	
		42	
-65.6	60	45	40B/m
		STOP IMPACT	2:50pm WL 78

PILE LOCATION MJBE
DATE DRIVEN 2/27/96
PILE TYPE 24"x.5"
TIP TYPE SF w/ CT
HAMMER TYPE DELMAG D30-13
RATED ENERGY 66100 ft-lbs
FOREMAN ED BEAN
EST. BERING CAP. ____
INITIAL LENGTH (S) 120'
CUTOFF LENGTH (S) 22
FINAL LENGTH 98
CUTOFF ELEV. 22
TIP ELEV. -65.6
COMMENTS
2:1

INSPECTOR: JN

Peratrovich, Nottingham & Drage, Inc.
Engineering Consultants
1506 West 36th Avenue Suite 101, ANCH. AK 99503
(907) 561-1011

ILE DRIVING RECORD

PROJECT NO. 95233.02

TIP ELEV.	PENETR. (FT.)	BLOWS/ FT.	NOTES
-30	0	START VIBRO	8:00 am WL 43'
¼ TURN	10		
	18		10'/min
-74	44	STOP VIBRO	8:10 am 87 WL
	44	START IMPACT	8:34 am 87 WL
"Rebound	45	32	
	46	40	
	47	42	48 B/m
	48	52	
	49	53	48 B/m
	50	50	
	51	51	
	52	50	
	53	48	48 B/m
	54	53	
¼ TURN	55	64	
	"	63	48 B/m
"Rebound	"	65	
	"	62	
	"	63	56 B/m
	60	62	52 B/m
	"	61	53 B/m
	"	53	

TIP ELEV.	PENETR. (FT.)	BLOWS/ FT.	NOTES
		53	
		51	50 B/m
	½" Rebound	49	
		64	48 B/m
-97	67	61	48 B/m
		STOP IMPACT	9:14 am WL 110

PILE LOCATION 5MV
DATE DRIVEN 2/27/96
PILE TYPE 24"x.5"
TIP TYPE SF w/ CT
HAMMER TYPE DELMAG 30-
RATED ENERGY 66100FT#
FOREMAN ED BEAN
EST. BERING CAP. ____
INITIAL LENGTH (S) 140
CUTOFF LENGTH (S) 21
FINAL LENGTH 119
CUTOFF ELEV. 22
TIP ELEV. -97
COMMENTS ____

INSPECTOR: JN

Peratrovich, Nottingham & Drage, Inc.
Engineering Consultants
1506 West 36th Avenue Suite 101, ANCH. AK 99503
(907) 561-1011

LE DRIVING RECORD

PROJECT NO. 95233.02

TIP ELEV.	PENETR. (FT.)	BLOWS/ FT.	NOTES
-49	0	MC	3pm 65'WL
		START VIBRO	9:25am WL
1/4TURN	13		
1/4TURN	28		
-85	36'	STOP VIBRO	9:33am 89 WL
-85	36'	START IMPACT	3pm 101WL
		10	
		14	
1" Rebound		22	48 B/m
1.5" Rebound	40	26	
1" Rebound		31	
-91		31	48 B/m
		31	
		32	
	45	30	
-95		36	
		50	
		42	
		43	52 B/m
	50	48	52 B/m
1/2" Rebound		41	48 B/m
-101		49	
		64	48 B/m

TIP ELEV.	PENETR. (FT.)	BLOWS/ FT.	NOTES
		62	46 B/m
	55	87	
-105	56	121	
		107	48 B/m
		94	45 B/m
		131	45 B/m
-109	60	143	44 B/m
		STOP IMPACT	3:30pm 125WL

PILE LOCATION 1Av
DATE DRIVEN 2/16/96
PILE TYPE 30"X.5"
TIP TYPE SF W/CT
HAMMER TYPE DELMAG 30-13
RATED ENERGY 166100FT#
FOREMAN ED BEAN
EST. BERING CAP.
INITIAL LENGTH (S) 160
CUTOFF LENGTH (S) 33
FINAL LENGTH 127
CUTOFF ELEV. 18.38
TIP ELEV. -109
COMMENTS

INSPECTOR: JN

Peratrovich, Nottingham & Drage, Inc.
Engineering Consultants
1506 West 36th Avenue Suite 101, ANCH. AK 99503
(907) 561-1011

LE DRIVING RECORD

PROJECT NO. 95233.02

TIP ELEV.	PENETR. (FT.)	BLOWS/ FT.	NOTES
-39	0	MC	3PM 55 WL
		START VIBRO	11:15am WL 50
½ TURN	21		
-84	45	STOP VIBRO	11:22am 95 WL
-84	45	START IMPACT	2:25pm 101 WL
-85		9	
		13	
		15	
		18	
	50	18	50 B/m
-90		21	
		20	48 B/m
		19	
		21	48 B/m
	55	21	
-95		23	
		26	
		31	44 B/m
¼ TURN		38	
1" Rebound	60	38	
-100		39	
		46	
		42	44 B/m
½" Rebound		47	48 B/m
	65	53	
-101		46	48 B/m
		53	48 B/m
		52	
		42	48 B/m
	70	39	
-105		40	48 B/m
		41	
		41	
		49	46 B/m
	75	46	
1" Rebound		53	
-111		45	46 B/m
		38	
		42	
	80	53	48 B/m
-115		42	48 B/m
		32	
-117	83	34	
		STOP IMPACT	2:52 PM WL 139'

PILE LOCATION 1B V
DATE DRIVEN 2/6/95
PILE TYPE 24" x .5"
TIP TYPE SF W/ CT
HAMMER TYPE DELMAG 30-
RATED ENERGY 66100 FT #
FOREMAN ED BEAN
EST. BERING CAP. ____
INITIAL LENGTH (S) 160'
CUTOFF LENGTH (S) 25
FINAL LENGTH 135
CUTOFF ELEV. 18.38'
TIP ELEV. -117
COMMENTS ____

INSPECTOR: JXL

Peratrovich, Nottingham & Drage, Inc.
Engineering Consultants
1506 West 36th Avenue Suite 101, ANCH. AK 99503
(907) 561-1011

PILE DRIVING RECORD

PROJECT NO. 95233.02

TIP ELEV.	PENETR. (FT.)	BLOWS/ FT.	NOTES
-29	0		3pm 45wx
-30	1	START VIBRO	12:15pm WL45
	½ TURN 16		
-64	35	STOP VIBRO	12:28pm WL79
-64	35	START IMPACT	1:35pm WL81
-65		8	
		10	
		8	
		11	
	40	12	
-70		10	
		11	
		14	52 B/m
		15	
	45	12	
-75		11	
		13	
	¼ TURN	14	
		15	
	50	12	
-80		20	
	½" Rebound	10	
		12	

TIP ELEV.	PENETR. (FT.)	BLOWS/ FT.	NOTES
		13	
	55	14	48 B/m
-85		20	
		23	
	¼ TURN	29	44 B/m
		37	
	½" Rebound 60	39	48 B/m
-90		30	
		46	48 B/m
		42	
		49	48 B/m
	65	39	
-95		46	48 B/m
		41	
		36	52 B/m
		35	
	70	37	
-100		33	44 B/m
		39	
		41	52 B/m
		43	
	75	52	52 B/m
-105		60	52 B/m

PILE LOCATION 1CV

DATE DRIVEN 2/16/96

PILE TYPE 24" x .5"

TIP TYPE SF w/ CT

HAMMER TYPE DELMAG 30

RATED ENERGY 66100 FT #

FOREMAN ED BEAN

EST. BERING CAP. _____

INITIAL LENGTH (S) 160

CUTOFF LENGTH (S) 25

FINAL LENGTH 135

CUTOFF ELEV. 18.38

TIP ELEV. -117

COMMENTS _____

INSPECTOR: JN

Peratrovich, Nottingham & Drage, Inc.
Engineering Consultants
1506 West 36th Avenue Suite 101, ANCH. AK 99503
(907) 561-1011

LE DRIVING RECORD

PROJECT NO.

TIP ELEV.	PENETR. (FT.)	BLOWS/ FT.	NOTES
-106	77	46	
		44	
		35	52B/m
	80	36	
-110		36	← 1/4 TURN
		47	
		46	52B/m
		48	
	85	45	50B/m
-115		42	
		49	52B/m
-117	88	134	48B/m
-117-3"	88 -3"	28	
		STOP IMPACT	2:13pm 138WL

TIP ELEV.	PENETR. (FT.)	BLOWS/ FT.	NOTES
	1/2" Rebound		←
	WOOD? 2" Rebound		←

PILE LOCATION 1CV

DATE DRIVEN

PILE TYPE

TIP TYPE

HAMMER TYPE

RATED ENERGY

FOREMAN

EST. BERING CAP.

INITIAL LENGTH (S)

CUTOFF LENGTH (S)

FINAL LENGTH

CUTOFF ELEV.

TIP ELEV.

COMMENTS

INSPECTOR:

Peratrovich, Nottingham & Drage, Inc.
Engineering Consultants
1506 West 36th Avenue Suite 101, ANCH. AK 99503
(907) 561-1011

LE DRIVING RECORD

PROJECT NO. 95233.02

TIP ELEV.	PENETR. (FT.)	BLOWS/ FT.	NOTES
-37	0	ML VERTICAL	10:30am WL 42
	4	START VIBRO LAY PILE	10:30am WL 55 (after) OVER
	14		6'/min
	17		STOP 10:40 START 10:41
	19	¼ TURN	
	20		3'/min
	23		3'/min
-61	24		
		STOP VIBRO	10:45am WL 73
		START IMPACT	11:25am WL 75
-61	24	7	
	25	7	
		9	
		12	
		10	44 B/m 6.7
		8	
	30	11	
		6	HAMMER ROCKING
		13	ON PILE
		6	
		10	
	35	10	
		10	
	40	13	
		11	
		9	
		14	
		13	
	45	16	
	¼ TURN	21	44 B/m 6.0
		31	
		35	44 B/m 6.0
		40	
	50	38	
		37	40 B/m
		38	
		37	
		46	
	55	61	
		72	44 B/m 6.0
		57	
		60	
	59	35	

PILE LOCATION 1 A BATTER

DATE DRIVEN 2/7/96

PILE TYPE 24" x .5"

TIP TYPE SF W/ CT

HAMMER TYPE DELMAG D30

RATED ENERGY 66100 FT #

FOREMAN ED BEAN

EST. BERING CAP. _____

INITIAL LENGTH (S) 160

CUTOFF LENGTH (S) 13'

FINAL LENGTH 147

CUTOFF ELEV. 18.38'

TIP ELEV. -115'

COMMENTS

TIDE COMING IN WHILE DRIVING, HAMMER WAS NOT ALWAYS ADJUSTED ON TOP OF PILE - RESULTED IN VARIED HIGHER BLOW COUNTS WITH LOWER STROKE

INSPECTOR: JN

Peratrovich, Nottingham & Drage, Inc.
Engineering Consultants
1506 West 36th Avenue Suite 101, ANCH. AK 99503
(907) 561-1011

LE DRIVING RECORD

PROJECT NO. 9523302

TIP ELEV.	PENETR. (FT.)	BLOWS/ FT.	NOTES
	60	39	44B/m 6.0'
		40	
¼ TURN		35	
		60	
		43	
	65	56	44B/m 6.0'
		128	48B/m 5.0'
		80	48B/m 5.0'
		50	
		60	
	70	58	
		69	
		64	43B/m 6.3'
		47	
		45	
	75	52	
		44	
		47	46B/m
		59	
		65	44B/m 6.0'
	80	69	44B/m 6.0'
		96	
		112	48B/m 5.0'

TIP ELEV.	PENETR. (FT.)	BLOWS/ FT.	NOTES
		57	
		50	
	85	65	
		59	48 B/m 7.2'
	87	72	
-115	87½"	56	43 B/m 6.3'
		STOP IMPACT	12:13 PM WL 141-2

PILE LOCATION 1A BATTER

DATE DRIVEN

PILE TYPE

TIP TYPE

HAMMER TYPE

RATED ENERGY

FOREMAN

EST. BERING CAP.

INITIAL LENGTH (S)

CUTOFF LENGTH (S)

FINAL LENGTH

CUTOFF ELEV.

TIP ELEV.

COMMENTS

HAMMER PULLED PILE TWO + ½ INCHES OFF OF TOP OF TEMPLATE SINCE LEADS WEREN'T ALWAYS ADJUSTED TO TIDE. PILE SLIGHTLY STEEPER THAN 2:1

INSPECTOR: JN

Peratrovich, Nottingham & Drage, Inc.
Engineering Consultants
1506 West 36th Avenue Suite 101, ANCH. AK 99503
(907) 561-1011

PILE DRIVING RECORD

PROJECT NO. 95233.02

TIP ELEV.	PENETR. (FT.)	BLOWS/ FT.	NOTES	TIP ELEV.	PENETR. (FT.)	BLOWS/ FT.	NOTES
-44		VERT ML	62 WL				
		START	1:50pm			67	
		VIBR	4'/min			71	
1/4 TURN	33		1'/min			73	
-81.5	42	STOP VIBR	2:00pm 104 WL			100	
-81.5	42	START IMPACT	2:25pm 104 WL		65	92	
		25				88	
		35			67	102	
	45	36		-104.4	67-6	120	
		41				STOP IMPACT	3:05pm 129-6
		50					
		48					
		41					
	50	55					
		52					
		68					
		67					
		69					
	55	86					
		90					
		99					
		99					
		98					
	60	66					

PILE LOCATION 2A BATTER

DATE DRIVEN 2/5/96

PILE TYPE 24"x.5

TIP TYPE SF W/ CT

HAMMER TYPE DELMAG 30-1

RATED ENERGY 66100FT #

FOREMAN ED BEAN

EST. BERING CAP.

INITIAL LENGTH (S) 150

CUTOFF LENGTH (S) 14

FINAL LENGTH 136

CUTOFF ELEV. 18.38

TIP ELEV. -104.4

COMMENTS

INSPECTOR: JN

Peratrovich, Nottingham & Drage, Inc.
Engineering Consultants
1506 West 36th Avenue Suite 101, ANCH. AK 99503
(907) 561-1011

PILE DRIVING RECORD

PROJECT NO. 95233.02

TIP ELEV.	PENETR. (FT.)	BLOWS/ FT.	NOTES
-33	MC		4:10pm 38'WL
	HYDRAULIC HOSE ON VIBR HAMMER BROKE		
	ATTEMPTED TO DRIVE ENTIRE LENGTH WITH IMPACT		
-34		START IMPACT	5:35pm 34'WL
-35			
		23 BLOWS	
-40			
-45		3	
		5	
		5	
		6	
		7	
-50		6	
		8	52B/M
		8	
		9	

TIP ELEV.	PENETR. (FT.)	BLOWS/ FT.	NOTES
		8	
-55		9	
		8	
		9	
		10	
		11	
-60		10	
		12	
		12	
		12	
		8	
-65		13	
		17	
		12	
		13	
		13	
-70		12	
		13	52B/M
		13	
		17	
		14	
-75		13	
-70		17	

Y-TURN

PILE LOCATION 2 CV

DATE DRIVEN 2/13/96

PILE TYPE 30"x.5"

TIP TYPE SF W/CT

HAMMER TYPE DELMAG30-1

RATED ENERGY 66100FT#

FOREMAN ED BEAN

EST. BERING CAP. _____

INITIAL LENGTH (S) 120

CUTOFF LENGTH (S) _____

FINAL LENGTH _____

CUTOFF ELEV. _____

TIP ELEV. _____

COMMENTS _____

INSPECTOR: JN

Peratrovich, Nottingham & Drage, Inc.
Engineering Consultants
1506 West 36th Avenue Suite 101, ANCH. AK 99503
(907) 561-1011

PILE DRIVING RECORD

PROJECT NO.

TIP ELEV.	PENETR. (FT.)	BLOWS/ FT.	NOTES
-77	18		
	15		
	19		
-80	30		
	27		
	31		
-83	34		
-83'6	19		44B/M
		STOP IMPACT	6PM STOP WL 82
OUT OF PLUMB PULLED PILE			
-33	0	START VIBRO	2/15/96 9:40am WL 40'
-74-6	41-6	STOP VIBRO	9:49am WL 81'-6
-75	42	2	
		6	
		9	
	45	9	
		12	
-80		10	52B/M
		14	
		17	
	50	20	
		24	
-85'		28	

TIP ELEV.	PENETR. (FT.)	BLOWS/ FT.	NOTES
		33	48B/M
		38	
	55	36	
		39	
-90		37	
		STOP IMPACT	
		START IMPACT	10:15am 97-6
-90-6	60	18	
-91-6		48	48B/M
		59	
		57	
		44	48B/M
-95'6	65	63	44B/M
		58	48B/M
		54	
		48	48B/M
	69	59	
100'-6	70-0	63	48B/M
100'-10	70-4	24	
		STOP IMPACT	10:30am 107L4

PILE LOCATION 2CL

DATE DRIVEN

PILE TYPE

TIP TYPE

HAMMER TYPE

RATED ENERGY

FOREMAN

EST. BERING CAP.

INITIAL LENGTH (S)

CUTOFF LENGTH (S)

FINAL LENGTH

CUTOFF ELEV.

TIP ELEV.

COMMENTS

INSPECTOR: JN

Peratrovich, Nottingham & Drage, Inc.
Engineering Consultants
1506 West 36th Avenue Suite 101, ANCH. AK 99503
(907) 561-1011

PILE DRIVING RECORD

PROJECT NO. 95233.02

TIP ELEV.	PENETR. (FT.)	BLOWS/ FT.	NOTES
-47	MC		4:10 pm WL 52'
-48	1	START VIBRO	12:10 pm WL 65'
1/4 TURN 16			
-75	28	STOP VIBRO	12:15 pm WL 92'
-75	28	START IMPACT	4:11 pm WL 80'
		10	
	30	14	
		24	
1/2" REBOUND		21	
-80		24	48 B/m
1" REBOUND		19	
1" REBOUND	35	21	
		20	46 B/m
		21	
-85		21	
		25	48 B/m
5" REB	40	18	
5" REB		22	
2" REB		25	
-90		24	
15" REB		23	
	45	24	48 B/m
		24	

TIP ELEV.	PENETR. (FT.)	BLOWS/ FT.	NOTES
1/2" REB		25	
-95		30	
1/4" REB		28	44 B/m
	50	32	
1/4 TURN		34	
		42	
-100		41	46 B/m
		49	46 B/m
	55	53	
		53	
		75	46 B/m
-105		84	44 B/m
		85	
	60	90	
		99	48 B/m
-109	62	133	44 B/m
-109-6	62'-6"	112	5:10 pm 113-6
		STOP IMPACT	

PILE LOCATION 2AV

DATE DRIVEN 2/13/96

PILE TYPE 30" x .5

TIP TYPE SF w/ CT

HAMMER TYPE DELMAG D30

RATED ENERGY 66100 FT #

FOREMAN ED BEAN

EST. BERING CAP. _____

INITIAL LENGTH (S) 160'

CUTOFF LENGTH (S) 32

FINAL LENGTH 128

CUTOFF ELEV. 18.38

TIP ELEV. -109.5

COMMENTS

44 B/m

INSPECTOR: JN

Peratrovich, Nottingham & Drage, Inc.
Engineering Consultants
1506 West 36th Avenue Suite 101, ANCH. AK 99503
(907) 561-1011

PILE DRIVING RECORD

PROJECT NO. 95233.02

TIP ELEV.	PENETR. (FT.)	BLOWS/ FT.	NOTES
-41	ML		4:10pm 46
-44		START VIBRO	2:50 pm 55
	¼ TURN		2'/min
-75		STOP VIBRO	3:07pm 85
-75		START IMPACT	3:20pm 83'
		12	
		15	
		15	
		16	
-80		18	
	½" Rebound	19	
		17	
		15	48 B/m
		18	
-85		22	
		22	
		23	
		25	
		23	
-90		24	44B/m
		33	
	¼ TURN	36	48 B/m
	8" Rebound	43	

TIP ELEV.	PENETR. (FT.)	BLOWS/ FT.	NOTES
		57	48B/m
-95		57	46 B/m
		62	46 B/m
		49	
		59	
		66	46B/m
-100		75	45 B/m
		64	
		51	48B/m
		66	44B/m
-64		61	
	¼" TURN	64	44 B/m
		61	
		89	46 B/m
		90	45B/m
-109		82	
-109'-1		11	41B/m
-109-2		12	
-109-3		10	
-109-4		8	41 B/m
-109-5		9	
-109-6		11	
-109-7		10	
-109-8		10	STOP IMPACT
-109-9		9	

PILE LOCATION 2BV
DATE DRIVEN 2/3/96
PILE TYPE 30"x.5"
TIP TYPE SFW/CT
HAMMER TYPE Delmag 30 :1
RATED ENERGY 66,100FT #
FOREMAN EDBEAN
EST. BERING CAP.
INITIAL LENGTH (S) 160'
CUTOFF LENGTH (S) 32
FINAL LENGTH 128
CUTOFF ELEV. 18.38
TIP ELEV. -110
COMMENTS

INSPECTOR: JN

Peratrovich, Nottingham & Drage, Inc.
Engineering Consultants
1506 West 36th Avenue Suite 101, ANCH. AK 99503
(907) 561-1011

PILE DRIVING RECORD

PROJECT NO. 95233.02

TIP ELEV.	PENETR. (FT.)	BLOWS/ FT.	NOTES
-26			9:40 am WL 39
-31	5	START VIBRO	9:10 am WL 42
	16		1/4 TURN
	21		2.7'/min
-52	26	STOP VIBRO	9:13 am WL 64
	26	START IMPACT	9:20 WL 64
-53	27	6	
		33	
-55		19	44 B/m
	30	20	
2" Rebound		21	
		20	
		23	
-60		17	
	35	21	
		21	
		16	
		17	
-65		18	
	40	20	48 B/m
		18	
		16	
		18	

TIP ELEV.	PENETR. (FT.)	BLOWS/ FT.	NOTES
-69 1/6	43'-6	17 STOP	9:30 am 82' WL ← hammer down
	43'-6	START IMPACT	12:55 pm WL 84-6
-70	44	15	
	45	36	48 B/m
1/4" Rebound	46	32	
		32	44 B/m
		33	
-75		39	
	50	26	
0-1/8" Rebound		30	50 B/m
		42	
		43	46 B/m
-80		55	
	55	56	50 B/m
		74	
-83	57	46	
-83.1	57'-1	8	
-83.3	57'-2	7	
-83.4	57-3	6	
-83.5	57'-4	6	
-83.6	57-5	5	
MOVE BARGE TO DRIVE PILE		STOP IMPACT	1:08 PM WL 98-3

PILE LOCATION 3CV
DATE DRIVEN 2/2/96
PILE TYPE 30" x .5"
TIP TYPE CT W/SF
HAMMER TYPE DELMAG D30-1
RATED ENERGY 66,100 FT #
FOREMAN ED BEAN
EST. BERING CAP.
INITIAL LENGTH (S) 120'
CUTOFF LENGTH (S) 4
FINAL LENGTH 116
CUTOFF ELEV. 18.38
TIP ELEV. -97
COMMENTS

INSPECTOR: JN

Peratrovich, Nottingham & Drage, Inc.
Engineering Consultants
1506 West 36th Avenue Suite 101, ANCH. AK 99503
(907) 561-1011

LE DRIVING RECORD

PROJECT NO. 95233.02

TIP ELEV.	PENETR. (FT.)	BLOWS/ FT.	NOTES
-83-6	57'-6	START IMPACT	1:27 pm 97'-6
1 1/4 TURN	58	32	
-85	59	80	46 B/F
	60	85	43 B/F
		116	48 B/F
		86	44 B/F
		70	
-90		83	42 B/F
	65	69	44 B/F
		74	44 B/F
		79	44 B/F
		73	44 B/F
-95		86	42 B/F
	70	76	46 B/F
-97	71	87	46 B/F
		STOP IMPACT	1:48 pm 111' WL

TIP ELEV.	PENETR. (FT.)	BLOWS/ FT.	NOTES

PILE LOCATION 3C V

DATE DRIVEN

PILE TYPE

TIP TYPE

HAMMER TYPE

RATED ENERGY

FOREMAN

EST. BERING CAP.

INITIAL LENGTH (S)

CUTOFF LENGTH (S)

FINAL LENGTH

CUTOFF ELEV.

TIP ELEV.

COMMENTS

INSPECTOR: JN

Peratrovich, Nottingham & Drage, Inc.
Engineering Consultants
1506 West 36th Avenue Suite 101, ANCH. AK 99503
(907) 561-1011

LE DRIVING RECORD

PROJECT NO. 95233.02

TIP ELEV.	PENETR. (FT.)	BLOWS/ FT.	NOTES
-44	ML	VERTICAL	3:44 pm WL 53
-46	2	START VIBRO	3:46 pm WL 51'
		LAY OVER	
¼ TURN			
½ TURN			
-76	36	STOP VIBRO	3:57 pm WL 84'
		START IMPACT	4:25 pm WL 82
-77	37	6	
	38	32	
	39	38	
		STOP IMPACT	4:28 pm 85
		START IMPACT	4:59 pm WL 83-6
	40	31	
	41	63	44 B/m
		56	44 B/m
		28	
¼ TURN		72	46 B/m
	45	62	
		62	
		70	
		101	44 B/m
		142	44 B/m
	50	106	
		74	44 B/m

TIP ELEV.	PENETR. (FT.)	BLOWS/ FT.	NOTES
		82	44 B/m
		80	46 B/m
		92	43 B/m
	55	55	43 B/m
		56	
		69	44 B/m
		76	
		68	43 B/m
¼ TURN	60	104	40 B/m
		103	40 B/m
		88	
		101	40 B/m
	64	119	
-103-7	64 -6"	120	5:50 pm 109'-6"

PILE LOCATION 3 A BATTER
DATE DRIVEN 2/2/96
PILE TYPE 24"x.5"
TIP TYPE SF W/ CT
HAMMER TYPE DELMAG D30-1
RATED ENERGY 66100 FT #
FOREMAN ED BEAN
EST. BERING CAP.
INITIAL LENGTH (S) 150'
CUTOFF LENGTH (S) 26
FINAL LENGTH 124
CUTOFF ELEV. 18.38'
TIP ELEV. -103'-7
COMMENTS
ANGLE 10.25°

INSPECTOR: JN

Peratrovich, Nottingham & Drage, Inc.
Engineering Consultants
1506 West 36th Avenue Suite 101, ANCH. AK 99503
(907) 561-1011

PILE DRIVING RECORD

PROJECT NO. 95233.02

TIP ELEV.	PENETR. (FT.)	BLOWS/ FT.	NOTES
-35	0	START VIBED	12:47PM 49'WL
-47	12		
-51	16		
-56	21		
-61	26		
-66	31		
-71	36		
-76	41		
-78	43	STOP VIBRO	1:04PM 92WL
-78	43	START IMPACT	2:40 PM 86WL
		29	
-80	45	34	
		30	44B/m
1/2" Rebound		30	
		38	
		41	
-85	50	45	
1/4" Rebound		50	
		54	
		54	
		47	46B/m
-90	55	58	
		72	44B/m

TIP ELEV.	PENETR. (FT.)	BLOWS/ FT.	NOTES
		72	
1/4 TURN		85	
		79	49B/m
-95	60	100	
		85	
		75	
		72	46B/m
		68	
-100	65	60	
		66	44B/m
-102	67	70	44B/m
-102'6	67'6	75	
-102'7	67'7	10	
-102'8	67'8	10	
102'9	67'9	12	3:23PM 110'9" STOPPED

PILE LOCATION 3BV
DATE DRIVEN 2/1/96
PILE TYPE 30"x.5"
TIP TYPE SF w/CT
HAMMER TYPE DELMAG D30-1
RATED ENERGY 66,100 FT#
FOREMAN ED BEAN
EST. BERING CAP.
INITIAL LENGTH (S) 160
CUTOFF LENGTH (S) 39
FINAL LENGTH 121
CUTOFF ELEV. 18.38
TIP ELEV. -102'9"
COMMENTS

INSPECTOR: JN

Peratrovich, Nottingham & Drage, Inc.
Engineering Consultants
1506 West 36th Avenue Suite 101, ANCH. AK 99503
(907) 561-1011

PILE DRIVING RECORD

PROJECT NO. 95233.02

TIP ELEV.	PENETR. (FT.)	BLOWS/ FT.	NOTES
-46	0		54' WL 2:10PM
	3	START VIBRO	57' WL 2:15PM
	7'-6		
	22		13'/min
1/4 turn	24		1'/min
	28		4'/min
-81	35	STOP VIBRO	WL 89' 2:29 pm
-81	35	START IMPACT	WL 85'-6 3:30pm
-81'-6	35'-6	4	
	36'-6	18	
	37'-6	21	
1" Rebound	38'-6	21	44 B/m
-85-6	39'-6	22	
	40'-6	19	
		20	
		21	48 B/m
1" Rebound		25	
-90-6		25	
	45'-6	24	
		26	
		22	
1" TURN		22	48 B/m
-95-6		20	

TIP ELEV.	PENETR. (FT.)	BLOWS/ FT.	NOTES
	50'-6	27	
		30	
		37	44 B/m
		37	44 B/m
-100-6		40	
	55'-6	44	
		55	
		53	44 B/m
1/4" REBOUND		60	
-105-6	60'-6	82	
1/4" TURN		79	44 B/m
		100	
-108-6		109	44 B/m
1/8" REBOUND	64'-6	120	
-109-7	64'-7	25	115 WL 4pm STOPPED

PILE LOCATION 3Av
DATE DRIVEN 2/1/96
PILE TYPE 30"x.5"t
TIP TYPE SF W/ CT
HAMMER TYPE DEL MAG 30-1
RATED ENERGY 66,100 FT#
FOREMAN ED BEAN
EST. BERING CAP.
INITIAL LENGTH (S) 160'
CUTOFF LENGTH (S) 32
FINAL LENGTH 128
CUTOFF ELEV. 18.38
TIP ELEV. -110
COMMENTS

INSPECTOR: JN

Peratrovich, Nottingham & Drage, Inc.
Engineering Consultants
1506 West 36th Avenue Suite 101, ANCH. AK 99503
(907) 561-1011

PILE DRIVING RECORD

PROJECT NO. 95233.02

TIP ELEV.	PENETR. (FT.)	BLOWS/ FT.	NOTES
-43			
	4		
-47		START VIBRO 5:55 PM	
		WL 52	
-59			
-71			
	30		6:20 PM STOP VIBRO
-73			START HAMMER
-73		9	
		9	
-75	32		
		10	
		10	
		9	48 B/M
		11	
-80	37	11	
		12	
		13	
		13	
		13	48 B/M
-85	42	15	
		15	
		15	
		16	
		15	
-90	47	16	

TIP ELEV.	PENETR. (FT.)	BLOWS/ FT.	NOTES
		16	
		18	
		19	
		24	48 B/M
	52	29	
		29	44 B/M
		35	
		37	
		40	46 B/M
-100	57	50	
		47	46 B/M
		48	
		42	
		46	44 B/M
-105	62	43	
		32	
		37	
		34	44 B/M
		37	
-110	67	38	
		42	
		41	
		42	

PILE LOCATION 4A_V

DATE DRIVEN 1/29/96

PILE TYPE 30" x .5" W

TIP TYPE SF W/ CT

HAMMER TYPE DELMAG D30-1

RATED ENERGY 66100 FT-LB

FOREMAN ED BEAN

EST. BERING CAP.

INITIAL LENGTH (S) 160'

CUTOFF LENGTH (S) 16

FINAL LENGTH 144

CUTOFF ELEV. 18.38'

TIP ELEV. -125'-9"

COMMENTS

INSPECTOR: JN

Peratrovich, Nottingham & Drage, Inc.
Engineering Consultants
1506 West 36th Avenue Suite 101, ANCH. AK 99503
(907) 561-1011

...LE DRIVING RECORD

PROJECT NO. 9523302

TIP ELEV.	PENETR. (FT.)	BLOWS/ FT.	NOTES
		40	
-115	72	51	
		53	44B/m
		53	
		55	44B/m
		75	44B/m
-120	77	71	44B/m
		66	
		69	
		66	46B/m
		65	44B/m
-125	82	88	STOP IMPACT 7:15PM
			WL 141
	1/30/96		START IMPACT
	82'-1	5	WL 132 1:30 PM
	82'-2	5	
	82'-3	7	
	82'-4	9	
	82'-5	9	44B/m
	82'-6	8	
	82'-7	9	
	82'-8	10	10 B/m
-125'-9	82-9	10	WL 133' 1:39 PM

TIP ELEV.	PENETR. (FT.)	BLOWS/ FT.	NOTES

PILE LOCATION 4AV

DATE DRIVEN _____

PILE TYPE _____

TIP TYPE _____

HAMMER TYPE _____

RATED ENERGY _____

FOREMAN _____

EST. BERING CAP. _____

INITIAL LENGTH (S) _____

CUTOFF LENGTH (S) _____

FINAL LENGTH _____

CUTOFF ELEV. _____

TIP ELEV. _____

COMMENTS _____

INSPECTOR: JN

2 of 2

Peratrovich, Nottingham & Drage, Inc.
Engineering Consultants
1506 West 36th Avenue Suite 101, ANCH. AK 99503
(907) 561-1011

PILE DRIVING RECORD

PROJECT NO. 95233.02

TIP ELEV.	PENETR. (FT.)	BLOWS/ FT.	NOTES
-39	0	START VIBRO	10:30am WL 58
¼ turn	∫		
	24	STOP VIBRO	10:37am WL 82'6
	24	START IMPACT	11:25am WL 81
	25	11	
	26	14	40 B/M 7.2'
	27	17	
	28	18	
	29	21	
	30	22	40 B/M 7.2'
		20	
		27	
		23	40 B/M 7.2'
		29	
	35	20	
		19	
		27	
		23	
		27	
	40	26	40 B/M 7.2'
		28	
		24	
	¼ TURN	26	38 B/M 7.2'

TIP ELEV.	PENETR. (FT.)	BLOWS/ FT.	NOTES
		38	
	45	35	
		38	
		45	
		58	
		95	
	50	85	
		81	
		80	
		74	
		92	40 B/M 7.2'
	55	80	
-92	55'-1"	40	11:57am 115 WL

PILE LOCATION 4A BATTER

DATE DRIVEN 1/31/96

PILE TYPE 30'x.5t

TIP TYPE SE W/CT

HAMMER TYPE DELMAG 30-1

RATED ENERGY 66100 FT #

FOREMAN ED BEAN

EST. BERING CAP. _____

INITIAL LENGTH (S) 140

CUTOFF LENGTH (S) 20

FINAL LENGTH 120

CUTOFF ELEV. 18.38

TIP ELEV. -102

COMMENTS _____

INSPECTOR: JN

Peratrovich, Nottingham & Drage, Inc.
Engineering Consultants
1506 West 36th Avenue Suite 101, ANCH. AK 99503
(907) 561-1011

PILE DRIVING RECORD

PROJECT NO. 95233.02

TIP ELEV.	PENETR. (FT.)	BLOWS/ FT.	NOTES	TIP ELEV.	PENETR. (FT.)	BLOWS/ FT.	NOTES
-35	0	START VIBRO	3:05pm WL 39'			30	
	12		3:06pm			43	42 B/m
1/4 turn	31		3:08pm		60	66	
	38		3:11pm			57	
	40	STOP VIBRO	3:12pm WL 79'			68	44B/m
	40	START IMPACT	3:52pm WL 78'			66	40 B/m
	41	8				77	
	42	18			65	62	42B/m
	43	16				112	LARGE FOOT MARK
	44	18				67	42B/m
	45	16				69	42B/m
		16				64	
		18	44B/m		69'-1"	20	TIME 5:19pm WL 107'-1
		19					
		29	1/2" REBOUND				
	50	12					
		18	1" REBOUND				
		29	1" REBOUND				
		18	44B/m				
1/4 turn		23					
	55	23					
		28					
		30					

1" MARKS NOT EQUAL

PILE LOCATION 4CB

DATE DRIVEN 1/31/96

PILE TYPE 30" x .5"t

TIP TYPE SF w/ CT

HAMMER TYPE DELMAG 30-13

RATED ENERGY 66100 FTH

FOREMAN ED BEAN

EST. BERING CAP.

INITIAL LENGTH (S) 140

CUTOFF LENGTH (S) 15

FINAL LENGTH 125

CUTOFF ELEV. 18.38

TIP ELEV. -107

COMMENTS

>2:1 OFF TOP OF TEMPLATE

~1.5"

INSPECTOR: JN

Peratrovich, Nottingham & Drage, Inc.
Engineering Consultants
1506 West 36th Avenue Suite 101, ANCH. AK 99503
(907) 561-1011

PILE DRIVING RECORD

PROJECT NO. 95233.02

TIP ELEV.	PENETR. (FT.)	BLOWS/ FT.	NOTES
-34	0	OWN WT	9:15am 47 WL
-37	3		START VIBRO WL 50 9:24am
-47	13		
-57	23		14'/min
-60	24	1/4 turn	
-65	31		8.6'/min
-67	33		END VIBRO WL 82 9:33am
-67	33	START IMPACT WL 76	12:45 PM
		9	
-69	35	11	
		13	
		13	
		15	
		17	
-74	40	17	48 B/m
		18	
		16	FOOT MARKS NOT EVEN
		11	
		17	
-79	45	18	
		19	
		18	
		17	
		23	
		27	
-94	50	40	46 B/m
		42	
		42	44 B/m
		51	
		48	44 B/m
		44	
		46	
		45	
		46	44 B/m
	55	55	
		47	
		46	
		50	
		47	
-99	60	50	
		57	46 B/m
		58	
		74	
-104	65	84	44 B/m
-104 1/4	69'-1"	46	1PM STOP WL 112'-1"

PILE LOCATION 4Bv

DATE DRIVEN 1/30/96

PILE TYPE 30" x .5"t V

TIP TYPE SF w/ CT

HAMMER TYPE DEL MAG 30

RATED ENERGY 66100 FT#

FOREMAN ED BEAN

EST. BERING CAP. _____

INITIAL LENGTH (S) 150'

CUTOFF LENGTH (S) 27

FINAL LENGTH 123

CUTOFF ELEV. 18.38'

TIP ELEV. -104

COMMENTS _____

INSPECTOR: JN

Peratrovich, Nottingham & Drage, Inc.
Engineering Consultants
1506 West 36th Avenue Suite 101, ANCH. AK 99503
(907) 561-1011

PILE DRIVING RECORD

PROJECT NO. 95233.02

TIP ELEV.	PENETR. (FT.)	BLOWS/ FT.	NOTES
-24	0	DOWN WT	9:45am 38'WL
	2	START VIBRO	10:12am 40'WL
-31	7		
-50	26	END VIBRO	10:26am 63'WL
	26	START IMPACT	11:47AM 62'WL
-51	27	9	
		21	
		21	
-54	30	18	
		23	
		12	
		16	
		16	48B/m
-59	35	16	
		15	
		14	
		16	
		13	
-64	40	15	
		13	
		15	
		13	
		18	

TIP ELEV.	PENETR. (FT.)	BLOWS/ FT.	NOTES
			44B/m
-69	45	23	
	1/4 TURN	22	
		29	
		27	
		31	
		38	44B/m
-74	50	46	
		40	44B/m
		36	
		37	
	1/4 TURN	46	
-80	56	42	
		38	
		44	44B/m
		44	44B/m
-84	60	32	
		37	
		43	
		43	
		42	44B/m
-89	65	40	
		42	46B/m
		44	

PILE LOCATION 4CV

DATE DRIVEN 1/30/96

PILE TYPE 30" X .5t V

TIP TYPE SF W/CT

HAMMER TYPE DELMAG D30

RATED ENERGY 66100FT#

FOREMAN ED BEAN

EST. BERING CAP.

INITIAL LENGTH (S) 140

CUTOFF LENGTH (S)

FINAL LENGTH 120

CUTOFF ELEV.

TIP ELEV.

COMMENTS

INSPECTOR: JN

1/

Peratrovich, Nottingham & Drage, Inc.
Engineering Consultants
1506 West 36th Avenue Suite 101, ANCH. AK 99503
(907) 561-1011

ILE DRIVING RECORD

PROJECT NO. 9823.02

TIP ELEV.	PENETR. (FT.)	BLOWS/ FT.	NOTES
		49	44 B/m
		56	44 B/m
-94	70	57	
		82	
		93	46 B/m
		70	
		79	46 B/m
-99	75	111	
-100	76	123	42 B/m
-100'8"	76-8"	115	STOP IMPACT 12:30pm WL 113-8"

TIP ELEV.	PENETR. (FT.)	BLOWS/ FT.	NOTES
		42 B/m	

PILE LOCATION 4CV

DATE DRIVEN

PILE TYPE

TIP TYPE

HAMMER TYPE

RATED ENERGY

FOREMAN

EST. BERING CAP.

INITIAL LENGTH (S)

CUTOFF LENGTH (S)

FINAL LENGTH

CUTOFF ELEV.

TIP ELEV.

COMMENTS

INSPECTOR: JN 2/2

Peratrovich, Nottingham & Drage, Inc.
Engineering Consultants
1506 West 36th Avenue Suite 101, ANCH. AK 99503
(907) 561-1011

LE DRIVING RECORD

PROJECT NO. 95233.02

TIP ELEV.	PENETR. (FT.)	BLOWS/ FT.	NOTES
-40	0	START 12:55pm	VIBRO WL 48'
		2.4'/min	
	26	END VIBRO 1:05pm	WL 73'
		START IMPACT 2pm	
	26	—	WL 74'
		41	
		39	40B/m
		37	
	30	38	
		37	
		39	40B/m
		28	
		30	
	35	40	
		29	40 B/m
		34	
		27	
		52	
	40	48	40B/m
		104	
		107	
		127	40B/m
		106	

TIP ELEV.	PENETR. (FT.)	BLOWS/ FT.	NOTES
	45	134	
		103	40B/m
		117	
		90	
	¼ turn	81	
	50	90	
		85	
		94	
		107	
		80	
	55	75	
		80	
-87'	57	122	STOP IMPACT
			3:10PM WL 105'
	60		

PILE LOCATION 5AB
DATE DRIVEN 1/29/96
PILE TYPE
TIP TYPE SF w/ CT
HAMMER TYPE DELMAG D30-
RATED ENERGY 66100 FT#
FOREMAN ED TEAN
EST. BERING CAP.
INITIAL LENGTH (S) 140
CUTOFF LENGTH (S) 15
FINAL LENGTH 125
CUTOFF ELEV. 18.38
TIP ELEV.
COMMENTS 1.5:1 BATTER
2½' WL DIF in impact
INSPECTOR: JN

Peratrovich, Nottingham & Drage, Inc.
Engineering Consultants
1506 West 36th Avenue Suite 101, ANCH. AK 99503
(907) 561-1011

PILE DRIVING RECORD

PROJECT NO. 95233.02

TIP ELEV.	PENETR. (FT.)	BLOWS/ FT.	NOTES
-29	0	START VIBRO	3:25 PM SOW
	5	20 S/5'	55
			3:37 PM WL 81' END VIBRO
	31		START IMPACT 4:35 PM WL 80'
		11	
		14	
		16	
	35	20	
		15	
		14	
		14	
		12	
	40	15	
		13	
		16	44B/M
		14	
		15	
	45	13	
		13	
		17	
		16	40B/M

TIP ELEV.	PENETR. (FT.)	BLOWS/ FT.	NOTES
		15	44B/M
	50	18	
		18	
		21	
		23	
		27	40B/M
	55	28	
		30	
		39	
		43	40B/M
		44	
	60	44	
		34	
		30	
		43	
		36	44B/M
	65	44	
		37	
		39	
		43	44B/M
		37	40B/M
	70	52	40B/M
	71	40	

PILE LOCATION 5 CB
DATE DRIVEN 1/24/96
PILE TYPE 30" x .5t B
TIP TYPE SF w/CT
HAMMER TYPE DELMAG D30
RATED ENERGY 66100 FT-#
FOREMAN ED BEAN
EST. BERING CAP. ____
INITIAL LENGTH (S) 140
CUTOFF LENGTH (S) 9'
FINAL LENGTH 131
CUTOFF ELEV. 18.38
TIP ELEV. -105
COMMENTS
BATER 2.5:1

INSPECTOR: JN

1/2

Peratrovich, Nottingham & Drage, Inc.
Engineering Consultants
1506 West 36th Avenue Suite 101, ANCH. AK 99503
(907) 561-1011

LE DRIVING RECORD

PROJECT NO. 9523302

TIP ELEV.	PENETR. (FT.)	BLOWS/ FT.	NOTES
	72	44	
		46	
		64	44 B/m
	75	65	44 B/m
-101	76	56	125 WL SPM
		END IMPACT	
	76	START IMPACT 1/26/96	
-102	77	64	44 B/m
	78	68	44 B/m
	79	94	44 B/m
	80	81	40 B/m
-105	81	82	40 B/m

TIP ELEV.	PENETR. (FT.)	BLOWS/ FT.	NOTES
			44 B/m
			START IMPACT 1/26/96 11:25am 114 WL (started + stopped several times)
			STOP 12:30pm WL 120'

PILE LOCATION 5CB

DATE DRIVEN

PILE TYPE

TIP TYPE

HAMMER TYPE

RATED ENERGY

FOREMAN

EST. BERING CAP.

INITIAL LENGTH (S)

CUTOFF LENGTH (S)

FINAL LENGTH

CUTOFF ELEV.

TIP ELEV.

COMMENTS

INSPECTOR: JN

Peratrovich, Nottingham & Drage, Inc.
Engineering Consultants
1506 West 36th Avenue Suite 101, ANCH. AK 99503
(907) 561-1011

LE DRIVING RECORD

PROJECT NO. 95233.02

TIP ELEV.	PENETR. (FT.)	BLOWS/ FT.	NOTES
-45	0		G2 W4 4:15PM
	1		
	2		
	3		
	4		
	5	HAMMER	
	6		
	7		
	8		
	9	IR RO	
	10		
	11		
	12	V	
	13		
	14		
	15		
	16		
	17		
	18		
	19		
	20		
	21		
	22		

TIP ELEV.	PENETR. (FT.)	BLOWS/ FT.	NOTES
(OVER)	23		
	24		
	25		
	26		
	27		
	28		
	29		
	30		
	31		
	32	Return	
	33	end Vibro	95 W4 4:45
	34	19	START IMPACT
	35	23	
	36	22	44 B/M
	37	22	
	38	23	44 B/M
	39	19	
	40	21	
	41	19	
	42	16	44 B/M
	43	21	
	44	18	
	45	19	

PILE LOCATION SBR

DATE DRIVEN 1/23/96

PILE TYPE 24"x.5t B

TIP TYPE SF w/ CT

HAMMER TYPE DELMAG30-1

RATED ENERGY 66100 FT#

FOREMAN ED BEAN

EST. BERING CAP. _____

INITIAL LENGTH (S) 140'

CUTOFF LENGTH (S) 7'

FINAL LENGTH 133

CUTOFF ELEV. 18.38

TIP ELEV. _____

COMMENTS _____

INSPECTOR: JN

Peratrovich, Nottingham & Drage, Inc.
Engineering Consultants
1506 West 36th Avenue Suite 101, ANCH. AK 99503
(907) 561-1011

LE DRIVING RECORD

PROJECT NO. 95233.02

TIP ELEV.	PENETR. (FT.)	BLOWS/ FT.	NOTES
	46	20	
	47	16	
	48	18	
	49	18	
	50	21	
	51	21	
¼turn	52	27	46Brm
	53	27	
	54	28	
	55	36	
	56	38	
	57	45	
	58	40	48B/m
	59	46	
	60	41	44B/m
	61	57	
	62	77	40 B/m
-103	63	54	
-103.3	63½ 3"	12	TPM STOPPED

TIP ELEV.	PENETR. (FT.)	BLOWS/ FT.	NOTES

Peratrovich, Nottingham & Drage, Inc.
Engineering Consultants
1506 West 36th Avenue Suite 101, ANCH. AK 99503
(907) 561-1011

PILE DRIVING RECORD

PROJECT NO. 95233.02

TIP ELEV.	PENETR. (FT.)	BLOWS/ FT.	NOTES
-45	OWN WT	1/20/96	
	VIBR HAMMER		
-72	27	END 1/20/96	
-72	27	IMPACT 1/22/96	WU 22 5:11PM
		18	48 B/m 6.3
		13	
-75	30	17	
		17	
-80	35	14	
		17	48 B/m 6.3
		16	
		19	
		24	
-85	40	28	
		21	
		35	

TIP ELEV.	PENETR. (FT.)	BLOWS/ FT.	NOTES
-90	45		
		29	
		32	
		29	48 B/m 9.1
		34	
-95	50	30	
		26	40 B/m
		31	
		30	
		40	40 B/m
-100	55	34	
		33	
		34	
		31	
		30	
-105	60	32	
		30	
		31	
		34	40 B/m 9.1
		41	
-110	65	36	

PILE LOCATION SAV
DATE DRIVEN 1/20/96 1/22/96
PILE TYPE 30" x .5t V
TIP TYPE SF w/CT
HAMMER TYPE DELMAG D6100 FT#
RATED ENERGY ~
FOREMAN ED BEAN
EST. BERING CAP.
INITIAL LENGTH (S) 140
CUTOFF LENGTH (S) 8
FINAL LENGTH 132
CUTOFF ELEV. 18.38
TIP ELEV. -114
COMMENTS

INSPECTOR: JN

Peratrovich, Nottingham & Drage, Inc.
Engineering Consultants
1506 West 36th Avenue Suite 101, ANCH. AK 99503
(907) 561-1011

LE DRIVING RECORD

PROJECT NO. 95233.02

TIP ELEV.	PENETR. (FT.)	BLOWS/ FT.	NOTES
-111		32	
-112		43	
-113		45	
-114	69	40	40 B/in
-114-1	69-1"	11/in	6:25 pm 116' WL 40 B/in

TIP ELEV.	PENETR. (FT.)	BLOWS/ FT.	NOTES

PILE LOCATION 5A-V

DATE DRIVEN

PILE TYPE

TIP TYPE

HAMMER TYPE

RATED ENERGY

FOREMAN

EST. BERING CAP.

INITIAL LENGTH (S)

CUTOFF LENGTH (S)

FINAL LENGTH

CUTOFF ELEV.

TIP ELEV.

COMMENTS

INSPECTOR: JN

Peratrovich, Nottingham & Drage, Inc.
Engineering Consultants
1506 West 36th Avenue Suite 101, ANCH. AK 99503
(907) 561-1011

PILE DRIVING RECORD

PROJECT NO. 95233.02

TIP ELEV.	PENETR. (FT.)	BLOWS/ FT.	NOTES
-31	0		5:14pm 36wL
-35			
		OWN WEIGHT	
		VIBR HAMMER -CONTINUALLY	
	5		
-40		LIFTED	
		+ LOWER	
		TO GET	
		PLUMBNESS	
	10	DRIVEN	
-45		W/O WEIGHT	
		OF VIBR	
		HAMMER	
	15		
-50			
	20		
-55			

TIP ELEV.	PENETR. (FT.)	BLOWS/ FT.	NOTES STROKE HEIGHT
	25		
-60			
	28	END VIBRO 5:25pm 61'WL	
		16 IMPACT	5:50pm
	30	17	
-65		17	48B/m 6.3'
		15	
		12	
		13	
	35	17	
-70		11	48B/m 6.3'
		15	
		15	
		13	
	40	14	
-75		16	
		16	
		20	48B/m 6.3'
		17	
-79	45	17	

PILE LOCATION SB4
DATE DRIVEN 1/19/96
PILE TYPE 30"x5"t
TIP TYPE SF w/ CT
HAMMER TYPE DELMAG 30+
RATED ENERGY 66100FT#
FOREMAN ED BEAN
EST. BERING CAP.
INITIAL LENGTH (S) 120'
CUTOFF LENGTH (S) 3'
FINAL LENGTH 116.8
CUTOFF ELEV. 18.4
TIP ELEV. -98.4
COMMENTS
STROKE
INSPECTOR: JW 1/2

Peratrovich, Nottingham & Drage, Inc.
Engineering Consultants
1506 West 36th Avenue Suite 101, ANCH. AK 99503
(907) 561-1011

ILE DRIVING RECORD

PROJECT NO.

TIP ELEV.	PENETR. (FT.)	BLOWS/ FT.	NOTES	TIP ELEV.	PENETR. (FT.)	BLOWS/ FT.	NOTES
-80	46	17	1/19/95 6pm 97 WL		63'8	7	45 B/m 7.2'
		17	44 B/m 7.5'		63'-9	6	
		14			63'-10	6	
		13			63'11	6	44 B/m 7.5
	50	16	48 B/m 6.3		64	6	
-85		19		-98-4	64'-1	7	12:07 112' WL
		20	48 B/m 6.3				
		20					
		20					
	55	19	46 B/m 6.8'				
-90		25					
		22					
		25					
		29	48 B/m 6.3'				
	60	21					
-95		24	46 B/m 6.8				
		30					
-97	63	31	46 B/m 6.8'				
-97-4	63'-4	10	94' WL 6:10 pm				
	RETAP		1/22/96				
	63'-5	10	12:06 pm 111' WL				
	63'-6	8					
	63'-7	6					

PILE LOCATION SBV

DATE DRIVEN 1/19/96

PILE TYPE 30" x .5t V

TIP TYPE SF W/CT

HAMMER TYPE DELMAG 30-

RATED ENERGY 66100 FT I

FOREMAN ED BEAN

EST. BERING CAP.

INITIAL LENGTH (S) 120'

CUTOFF LENGTH (S)

FINAL LENGTH

CUTOFF ELEV.

TIP ELEV.

COMMENTS

INSPECTOR: JN

2/7

Peratrovich, Nottingham & Drage, Inc.
Engineering Consultants
1506 West 36th Avenue Suite 101, ANCH. AK 99503
(907) 561-1011

PILE DRIVING RECORD

PROJECT NO. 95233.02

TIP ELEV.	PENETR. (FT.)	BLOWS/ FT.	NOTES
-25	0	ML	1/19/96
		GWN WT	
	2	VIBE	211 PM, 38'
-47	22	END VIBE	2:20 PM 42 WL
		impact 1/22	60' WL 4:45 PM
-48	23	18	
		22	
-50	25	24	
		20	48 B/m 6.3'
		19	
		21	
		24	
-55	30	25	
		17	
		21	
		20	
1/4 hour		18	5.4'
-60	35	25	
		18	
		19	

TIP ELEV.	PENETR. (FT.)	BLOWS/ FT.	NOTES
		17	
		17	
-65	40	21	
		21	
		16	
		19	
-70	1/4 hour 45	18	6.3'
		19	
		21	
		22	6.3'
		25	
-75	50	25	
		27	
		38	
		38	
		56	
-80	55	46	
		45	7.5'
		42	
		43	
-84		38	
-84'-6"	59'6"	16	1/22/96 STOPPED

5:05 PM WL 96'

PILE LOCATION 5CV

DATE DRIVEN 1/23, 22, 19/9

PILE TYPE 30' x .5t V

TIP TYPE SE W/CT

HAMMER TYPE DELMAG 30-1

RATED ENERGY 66100FT#

FOREMAN ED BEAN

EST. BERING CAP. _____

INITIAL LENGTH (S) 120

CUTOFF LENGTH (S) 5

FINAL LENGTH 115

CUTOFF ELEV. 18.4

TIP ELEV. -97.

COMMENTS _____

INSPECTOR: JN

Peratrovich, Nottingham & Drage, Inc.
Engineering Consultants
1506 West 36th Avenue Suite 101, ANCH. AK 99503
(907) 561-1011

LE DRIVING RECORD

PROJECT NO. 95-23302

TIP ELEV.	PENETR. (FT.)	BLOWS/ FT.	NOTES
	11/23/28		
-85	60	15	RESTART
-86		24	WL 11:45am 95
		33	7.5'
		43	7.5'
		55	
-90	65	52	9.1'
		50	
		54	
		51	9.1'
		54	
-95	70	65	
		68	40 B/m 9.1'
-97	72	94	10 6 12pm
-97-4"	72'4	35	40 B/m 9.1' STOPPED

TIP ELEV.	PENETR. (FT.)	BLOWS/ FT.	NOTES

PILE LOCATION SCV

DATE DRIVEN

PILE TYPE

TIP TYPE

HAMMER TYPE

RATED ENERGY

FOREMAN

EST. BERING CAP.

INITIAL LENGTH (S)

CUTOFF LENGTH (S)

FINAL LENGTH

CUTOFF ELEV.

TIP ELEV.

COMMENTS

INSPECTOR: JN

Peratrovich, Nottingham & Drage, Inc.
Engineering Consultants
1506 West 36th Avenue Suite 101, ANCH. AK 99503
(907) 561-1011

PILE DRIVING RECORD

PROJECT NO. 95233.02

TIP ELEV.	PENETR. (FT.)	BLOWS/ FT.	NOTES
-17	0	ML	1/16/96 5:04pm
-18	1	VIBR	34'WC
-19	2		
-20	3		
-21	4		
-22	5		
-23	6		
-24	7		
-25	8		
-26	9		
-27	10		
-28	11		
-29	12		
-30	13		
-31	14		6.7'/min
-32	15		7.5'/min
-32	16		7.5'/min
-33	17		
-34	18		5:20pm 54'WL
-35	19	STOP VIBRO	7.5'/min
-36	20	START IMPACT	
-37	21	8	8:50am 54'WL
-38	22	16	
-39	23	15	
-40	24	15	
-41	25	16	48B/min 6.3' STROKE
-42	26	12	
-43	27	13	
-44	28	12	
-45	29	13	
-46	30	9	
-47	31	9	
-48	32	9	
-49	33	9	
-50	34	9	
-51	35	9	
-52	36	9	
-53	37	8	
-54	38	9	
-55	39	15	
-56	40	7	
-57	41	8	
-58	42	10	50B/min 5.8' STROKE
-59	43	10	STOPPED 75'-6"WL 9am
		3.8' above cutoff	
		SPLICED ON 30FT PC	

PILE LOCATION A2-D A2-NORTH

DATE DRIVEN 1/16/96 + 1/17/

PILE TYPE 24"x.5"t V

TIP TYPE SE W/CT

HAMMER TYPE DELMAG D30-1

RATED ENERGY 66100FT-#

FOREMAN ED BEAN

EST. BERING CAP. _____

INITIAL LENGTH (S) 80+30SA

CUTOFF LENGTH (S) _____

FINAL LENGTH _____

CUTOFF ELEV. 18.75

TIP ELEV. _____

COMMENTS

30'-SPLICE

INSPECTOR: JEN

1/2

Peratrovich, Nottingham & Drage, Inc.
Engineering Consultants
1506 West 36th Avenue Suite 101, ANCH. AK 99503
(907) 561-1011

PILE DRIVING RECORD

PROJECT NO. 95233.02

TIP ELEV.	PENETR. (FT.)	BLOWS/ FT.	NOTES
-59	43	WL	66' 2:30pm 1/18/96
-60	44	20	48 B/m 6.3' Stroke
-61	45	25	47 B/m
-62	46	24	48 B/m
-63	47	21	48 B/m
-64	48	19	48 B/m
-65	49	21	45 B/m
-66	50	22	49 B/m
-67	51	20	48 B/m
-68	52	20	47 B/m
-69	53	23	47 B/m
-70	54	27	⎫
-71	55	22	⎭
-72	56	16	56 B/m
-73	57	15	
-74	58	13	52 B/m 5.36' Stroke
-75	59	20	
	60	17	
	61	11	
	62	24	
	63	24	52 B/m
-80	64	24	
	65	26	
	66	26	48 B/m 6.3'
	67	24	
	68	⎫	
-85	69	⎭	
	70	27	48 B/m 6.3'
	71	30	46 B/m 6.85'
	72	47	43 B/m 7.8'
	73	55	45 B/m 7.2'
-90	74	78	45 B/m 7.2' Stroke
		STOPPED	3pm 98' WL

PILE LOCATION A2-D
DATE DRIVEN 1/18/96
PILE TYPE 24x.5tV
TIP TYPE SF WCT
HAMMER TYPE DELMAG D30
RATED ENERGY 66100 FT-#
FOREMAN ED BEAN
EST. BERING CAP.
INITIAL LENGTH (S) 80 + 30
CUTOFF LENGTH (S) -1.5
FINAL LENGTH 108.5
CUTOFF ELEV. 18.75
TIP ELEV. -90
COMMENTS
30' SPLICE

INSPECTOR: JEN

Peratrovich, Nottingham & Drage, Inc.
Engineering Consultants
1506 West 36th Avenue Suite 101, ANCH. AK 99503
(907) 561-1011

PILE DRIVING RECORD

PROJECT NO.

TIP ELEV.	PENETR. (FT.)	BLOWS/ FT.	NOTES
-16	0	ML	2:35pm 20' WL
-17	1	} OWW	
-18	2	} WT	
-19	3	VIBRO	2:35pm
-20	4		1.3'/min
-21	5		
-22	6		
-23	7		1.3'/min
-24	8		.7'/min
-25	9		1'/mn
-26	10		1.5'/min
-27	11		2'/min
-28	12		1.8'/min
-29	13		.69'/min
-30	14		2.4'/min
-31	15		1.7'/min
-32	16		2.3'/min
-33	17		1.3'/min
-34	18		1.3'/min
-35	19		2'/min
-36	20		1.5'/min
-37	21	IMPACT 41	52 B/min
-38	22	25	
-39	23	27	
-40	24	28	52B/min
-41	25	21	
-42	26	20	
-43	27	18	
-44	28	16	
-45	29	18	
-46	30	17	52B/mn
-47	31	17	
-48	32	16	
-49	33	15	
-50	34	13	
-51	35	17	
-52	36	16	
-53	37	15	
-54	38	14	
-55	39	17	48B/min
	39'9"	11	RE DRIVE 1/17/96 2PM
	40'9"	17	
	41'9"	15	
	42'9"	15	
	43'9"	12	STOPPED 2:10pm

PILE LOCATION A2E
DATE DRIVEN 1/16/96
PILE TYPE 24"x.5" V
TIP TYPE SF W/CT
HAMMER TYPE DELMAG 30
RATED ENERGY 66100
FOREMAN ED BEAN
EST. BERING CAP.
INITIAL LENGTH (S) 80
CUTOFF LENGTH (S)
FINAL LENGTH
CUTOFF ELEV.
TIP ELEV.
COMMENTS
4pm 50' WL

INSPECTOR: JN

Peratrovich, Nottingham & Drage, Inc.
Engineering Consultants
1506 West 36th Avenue Suite 101, ANCH. AK 99503
(907) 561-1011

PILE DRIVING RECORD

PROJECT NO. 95233.02

TIP ELEV.	PENETR. (FT.)	BLOWS/ FT.	NOTES
-17	0	MC	1/17/96 4:30pm
	1	VIBRO	20'WL
	2		
	3		
	4	ON	
	5		
	6	HAMMER	
	7		
	8		
	9	OF	
	10		
	11	WEIGHT	
	12	DROP	
	13		
	14		
	15	NO	
	16		
	17		
	18		
	19		
	20		4'4 UPM / 36'WL
-38	21	END VIBRO	38
	22	27	START IMPACT
	23	23	
	24	25	
	25	18	45 B/min
	26	18	
	27	17	
	28	13	43 B/min
	29	13	
	30	12	
	31	16	
	32	19	
	33	24	48B/min
	34	12	51 2rpm STOPPED
	1/18/96		
	34	2:20pm WL 60	
	35	25	49B/m
	36	17	42.5B/m
	37	17	42.5 B/m
	38	18	43 B/m
	39	19	42 B/m
	40	21	48.5 B/m
-53	40'6	18	40 B/m
			STOPPED 2:30pm 66'-6

5:10pm 37'WL

PILE LOCATION AZ-EBATTER AZ-
DATE DRIVEN 1/17/96 1/18/96
PILE TYPE 24" x .5" t B
TIP TYPE SF W/CT
HAMMER TYPE DELMAG D30
RATED ENERGY 66,100 FT#
FOREMAN ED BEAN
EST. BERING CAP. -
INITIAL LENGTH (S) 80
CUTOFF LENGTH (S) 1.5'
FINAL LENGTH 78.5'
CUTOFF ELEV. 18.75
TIP ELEV. -53
COMMENTS

= 4.8' STROKE
= 6.4'
= 6.4'
= 6.3' STROKE
= 6.6' STROKE
= 5.2' STROKE
2:30pm 66'-6 - 59.5 = 7.2' Stroke
66'-6

INSPECTOR: JEN

Peratrovich, Nottingham & Drage, Inc.
Engineering Consultants
1506 West 36th Avenue Suite 101, ANCH. AK 99503
(907) 561-1011

PILE DRIVING RECORD

PROJECT NO. 95233.02

TIP ELEV.	PENETR. (FT.)	BLOWS/ FT.	NOTES
+3	ML		3:30PM START
2	1	10	
1	2	15	
0	3	30	
-1	4	44	52B/m
-2	5	57	
-3	6	52	
-4	7	76	
-5	8	51	
-6	9	68	52B/m
-7	10	69	
-8	11	48	
-9	12	55	52B/m
-10	13	40	
-11	14	51	
-12	15	47	
-13	16	51	48B/m
-14	17	52	
-15	18	56	
-16	19	65	
-17	20	48	
-18	21	44	50B/m
-19	22	56	
-20	23	38	52B/m
-21	24	23	
-22	25	27	
-23	26	43	50B/m
-24	27	44	
-25	28	45	
-26	29	39	
-27	30	39	
-28	31	40	48B/m
-29	32	60	
-30	33	46	
-31	34	47	
-32	35	41	
-33	36	42	
-34	37	37	48B/min
-35	38	40	
-36	39	45	1/2 TURN
-37	40	56	
	1"	10	DO NOT MOVE 48 BLOW/min
			5:30PM

PILE LOCATION A1-D A1 NORTH

DATE DRIVEN 1/15/96

PILE TYPE V 24"X.5t

TIP TYPE SF W/ CONICAL T

HAMMER TYPE DEL MAG30-

RATED ENERGY 606,000 FT#

FOREMAN ED BEAN

EST. BERING CAP. _____

INITIAL LENGTH (S) 60'

CUTOFF LENGTH (S) 4'

FINAL LENGTH 56

CUTOFF ELEV. 18.75'

TIP ELEV. -37

COMMENTS

TOP OF PILE WAS MUSHROOMED - PILE DAMAGED (CRACK IN TOP) BEFORE DRIVING

INSPECTOR: AM

Peratrovich, Nottingham & Drage, Inc.
Engineering Consultants
1506 West 36th Avenue Suite 101, ANCH. AK 99503
(907) 561-1011

PILE DRIVING RECORD

PROJECT NO. 95233.02

TIP ELEV.	PENETR. (FT.)	BLOWS/ FT.	NOTES
0	mL	DUG HOLE	
0	VIBR	HAMMER	
-1	1'		4.6'/min
-2	2'		1.5'/min
-3'6	3'-6	END VIB	.42'/min
-5	IMPACT 5	32	48 BL/min
-6	6	30	
-7	7	33	
-8	8	28	
-9	9	37	
-10	10	29	
-11	11	18	
-12	12	29	
-13	13	27	
-14	14	23	
-15	15	16	
-16	16	29	
-17	17	26	
-18	18	∫	
-19	19	∫	
-20	20	24	
-21	21	41	
-22	22	24	
-23	23	18	48 BL/min
-24	24	22	
-25	25	24	
-26	26	26	
-27	27	32	
-28	28	23	
-29	29	20	
-30	30	27	
-31	31	25	
-32	32	26	
-33	33	∫	
-34	34	21	
-35	35	21	
-36	36	28	
-37	37	27	
-38	38	22	
-39	39	21	
-40	40	24	41 B/min
	stopped	12:50 PM	

PILE LOCATION A1 E

DATE DRIVEN 1/12/96

PILE TYPE 24"x.5t V

TIP TYPE CT W/SF

HAMMER TYPE DELMAG D30-1 ICE 815 VIB

RATED ENERGY 66,100 FT-LB

FOREMAN ED BEAN

EST. BERING CAP. _____

INITIAL LENGTH (S) 60'

CUTOFF LENGTH (S) 1'

FINAL LENGTH 59'

CUTOFF ELEV. 18.75

TIP ELEV. -40.25

COMMENTS _____

INSPECTOR: JM

Peratrovich, Nottingham & Drage, Inc.
Engineering Consultants
1506 West 36th Avenue Suite 101, ANCH. AK 99503
(907) 561-1011

PILE DRIVING RECORD

PROJECT NO. 95233.02

TIP ELEV.	PENETR. (FT.)	BLOWS/ FT.	NOTES
-65			4:45 WL64
	7	Lay Pile over	
4 TURN	18		7"/min
4 TURN	30		7.5'/min
-92		STOP VIBRO	4:55pm WL 97'
		START IMPACT	5:09pm WL 97'
	31	10	
		10	
		15	
		19	
	35	30	
		20	40 B/m
		16	
		14	
		15	
	40	16	44 B/m
		18	
1/2-1" Rebound		19	
		20	
	44	17	
		25	
		28	50 B/m
		36	

TIP ELEV.	PENETR. (FT.)	BLOWS/ FT.	NOTES
		25	
		34	
1/4-1/2" Rebound		22	
	51	27	
		21	48 B/m
		24	
		21	
-125.2	55	18	5:20pm WL 132'
			STOPPED IMPACT

PILE LOCATION B1SB
DATE DRIVEN 2-15-96
PILE TYPE 24"x.5"
TIP TYPE SF W/CT
HAMMER TYPE DELMAG D30-13
RATED ENERGY 66,100 FT-#
FOREMAN ED BEAN
EST. BEARING CAP. _____
INITIAL LENGTH (S) 160'
CUTOFF LENGTH (S) 6'
FINAL LENGTH 154'
CUTOFF ELEV. 21
TIP ELEV. -125.2
COMMENTS
5:1

INSPECTOR: JN

Peratrovich, Nottingham & Drage, Inc.
Engineering Consultants
1506 West 36th Avenue Suite 101, ANCH. AK 99503
(907) 561-1011

ILE DRIVING RECORD

PROJECT NO. 95233.02

TIP ELEV.	PENETR. (FT.)	BLOWS/ FT.	NOTES
-48	0	START VIBRO	1:55pm WL52
	13		Lay pile over
1/4 TURN	17		
-74	30	STOP VIBRO	2:02pm WL88
	30	START IMPACT	2:17pm WL89
		7	
		8	
		10	
		16	
	35	16	
		15	
		12	
		14	
		10	
	40	13	
1/4 TURN		16	
		13	
		14	
		17	
	45	20	
		17	
1/2" rebound		16	
		15	
		12	
	50	18	
		18	
		14	
		20	
	54	19	4BB/m
-98		STOP IMPACT	2:32pm WL112

PILE LOCATION B1ER

DATE DRIVEN 2-15-96

PILE TYPE 30" x .5"

TIP TYPE SF w/ CT

HAMMER TYPE DELMAG 30-1

RATED ENERGY ~~66,100 FT#~~

FOREMAN ED BEAN

EST. BERING CAP. _____

INITIAL LENGTH (S) 140'

CUTOFF LENGTH (S) 9

FINAL LENGTH 131

CUTOFF ELEV. 21

TIP ELEV. -98

COMMENTS _____

INSPECTOR: JN

Peratrovich, Nottingham & Drage, Inc.
Engineering Consultants
1506 West 36th Avenue Suite 101, ANCH. AK 99503
(907) 561-1011

PILE DRIVING RECORD

PROJECT NO. 95233.02

TIP ELEV.	PENETR. (FT.)	BLOWS/ FT.	NOTES
-58	0	VERTICAL MC	11:30am 68'WL
	15		12'/min
¼ TURN	37		
-98	42	STOP VIBRO	11:40am 113'WL
		START IMPACT	11:58am
	43	13	
		24	
	45	34	
		43	
		59	48 B/m
¼" Rebound		66	
		79	46 B/m
	50	76	
		72	45 B/m
		87	46 B/m
		64	
		60	
¼ TURN	55	52	48 B/m
	56	52	
	57	57	48 B/m
	58	55	
		50	
	60	42	
		35	48 B/m

TIP ELEV.	PENETR. (FT.)	BLOWS/ FT.	NOTES
		23	
		35	
		36	
	65	33	48 B/m
		28	
-121.6	67	27	
		STOP IMPACT	12:30pm WL 136

PILE LOCATION T32SB
DATE DRIVEN 2-14-96
PILE TYPE 24" X .5"
TIP TYPE SF W/ CT
HAMMER TYPE DELMAG30
RATED ENERGY 66100 FT#
FOREMAN ED BEAN
EST. BERING CAP.
INITIAL LENGTH (S) 160
CUTOFF LENGTH (S) 9
FINAL LENGTH 151
CUTOFF ELEV. 21
TIP ELEV. -121.6
COMMENTS

INSPECTOR: JN

Peratrovich, Nottingham & Drage, Inc.
Engineering Consultants
1506 West 36th Avenue Suite 101, ANCH. AK 99503
(907) 561-1011

ILE DRIVING RECORD

PROJECT NO. 95233.02

TIP ELEV.	PENETR. (FT.)	BLOWS/ FT.	NOTES
-57	0	VERTICAL ML	9:46am 71'WL
	9	LAY PILE OVER	
	18		8'/min
TURN	26		
	33		
TURN	45		
-102	47	STOP VIBRO	10:03am 118' WL
-102	47	START IMPACT	10:55am 115'-6"WL
	48	20	
		21	4"/m
	50	27	
		31	4"/m
		50	
	53	74	4"/m
-107	53'-6	62	

ANGLE IRON WELDED ONTO TWO PILES IN BENT 1 BREASTING DOLPHIN FELL OFF. CREW WENT OVER TO BENT 1 NORTH BREASTING DOLPHIN BATTER + WAS ABLE TO FEEL B2SA PILE HITTING B2NB, IN 3 HITS. PILE WAS REMOVED WITH VIBRATORY HAMMER + REDRIVEN

PILE LOCATION B2SB

DATE DRIVEN 2-14-96

PILE TYPE 24" X .5"

TIP TYPE SF W/CT

HAMMER TYPE DELMAG D30-1

RATED ENERGY 66100 FT#

FOREMAN ED BEAN

EST. BERING CAP. _____

INITIAL LENGTH (S) 160'

CUTOFF LENGTH (S) _____

FINAL LENGTH _____

CUTOFF ELEV. _____

TIP ELEV. _____

COMMENTS _____

INSPECTOR: JN

1/

Peratrovich, Nottingham & Drage, Inc.
Engineering Consultants
1506 West 36th Avenue Suite 101, ANCH. AK 99503
(907) 561-1011

ILE DRIVING RECORD

PROJECT NO. 9523302

TIP ELEV.	PENETR. (FT.)	BLOWS/ FT.	NOTES
-52	0	START ML V:SEO	12:35pm WL 55
-69	17	LAY PILE OVER	
1/4 TURN	24		
	25	STOP VIBRO	12:55PM WL 81
	25	START IMPACT	1:15pm 846
	26	11	
		10	
		13	
		15	44 B/m
	30	12	
		18	
		22	
		39	
		42	
	35	65	40 B/m
		53	
		61	40 B/m
		53	41 B/m
		40	
	40	43	40 B/m
		42	
		39	
		40	

TIP ELEV.	PENETR. (FT.)	BLOWS/ FT.	NOTES
Vertical		36	41 B/m
	45	33	
1/4 TURN		38	
1/4 - 1/2" Reboard		38	44 B/m
		40	
		34	42 B/m
	50	42	
		36	44 B/m
-98.5	52	38	WL 110 1:45pm

PILE LOCATION 13 2 E B

DATE DRIVEN 2/13/96

PILE TYPE 30" x .5

TIP TYPE SF W/CT

HAMMER TYPE DELMAG D30-13

RATED ENERGY 66,100 FT-

FOREMAN ED BEAN

EST. BERING CAP. _____

INITIAL LENGTH (S) 140'

CUTOFF LENGTH (S) 9

FINAL LENGTH 131'

CUTOFF ELEV. 21'

TIP ELEV. -98.5

COMMENTS

2:1

INSPECTOR: JN

Peratrovich, Nottingham & Drage, Inc.
Engineering Consultants
1506 West 36th Avenue Suite 101, ANCH. AK 99503
(907) 561-1011

PILE DRIVING RECORD

PROJECT NO. 95233.02

TIP ELEV.	PENETR. (FT.)	BLOWS/ FT.	NOTES
-60	0	vertical ML	65' 4:13pm
		START VIBRO	4:13pm
	8	LAY PILE OVER	7-10'/min
4 TURN	30		
	45	STOP VIBRO	4:27pm 114'WL
		START IMPACT	4:45pm 115
	46	8	
		8	
		10	
		11	44 B/m
	50	12	
		13	
		16	
		14	
1" Rebound		24	
	55	26	
		19	44 B/m
½" Rebound		16	
		21	
		17	
	60	14	
		13	
		16	48 B/m

TIP ELEV.	PENETR. (FT.)	BLOWS/ FT.	NOTES
		14	
		16	
	65	13	
-122	65-4"	7	
		STOP IMPACT	136-4WL 4:50pm
		WELD ON PUP	
-122	2/14/96	START IMPACT	138WL 8:27am
	66-4	10	
	67-4	11	44 B/m
	68-4	18	
	69-4	12	
	70-4	14	48 B/m
-126	71-4	9	
		STOPPED	142WL 8:31am

PILE LOCATION B2NB
DATE DRIVEN 2/13/96
PILE TYPE 24"x.5"
TIP TYPE SF w/ CT
HAMMER TYPE DELMAG30-1
RATED ENERGY 66100FT#
FOREMAN ED BEAN
EST. BERING
CAP.
INITIAL LENGTH (S) 160'
CUTOFF LENGTH (S) 2
FINAL LENGTH 148
CUTOFF ELEV. 21
TIP ELEV. -126
COMMENTS
3:1

INSPECTOR: JN

Peratrovich, Nottingham & Drage, Inc.
Engineering Consultants
1506 West 36th Avenue Suite 101, ANCH. AK 99503
(907) 561-1011

ILE DRIVING RECORD

PROJECT NO. 9523302

TIP ELEV.	PENETR. (FT.)	BLOWS/ FT.	NOTES
-54.5	0	VERTICAL ML	10:23am 56WL
	3	START VIBRO	9:20am 62WL
WITHDRAWN	23		
	38	STOP VIBRO	9:30am 97'WL
	38	START IMPACT	10:07am 97WL
	39	14	
	40	13	
		16	
		15	
		15	48 B/m
		24	
	45	26	
		27	
		22	44B/m
		21	
		24	
	50	30	44B/m
		37	
		38	
		31	44B/m
		42	
	55	40	44B/m
		34	
		25	45 B/m
		24	
		23	44 B/m
	60	28	
		25	
		24	
		20	
		23	
	65	19	
		27	
		27	48 B/m
		31	
		18	
	70	24	
		27	
		32	
		26	52B/m
-121	74	32	48 B/m
		STOP IMPACT	10:30am WL 132'-6

PILE LOCATION B3 N R
DATE DRIVEN 2/9/96
PILE TYPE 24"X.5"
TIP TYPE SF W/CT
HAMMER TYPE DELMAG D30-1
RATED ENERGY 66100 FT-LB
FOREMAN ED BEAN
EST. BERING CAP.
INITIAL LENGTH (S) 160
CUTOFF LENGTH (S) 8
FINAL LENGTH 152
CUTOFF ELEV. 21
TIP ELEV. -121
COMMENTS
1/8" OR LESS
REBOUND

INSPECTOR: JN

Peratrovich, Nottingham & Drage, Inc.
Engineering Consultants
1506 West 36th Avenue Suite 101, ANCH. AK 99503
(907) 561-1011

LE DRIVING RECORD

PROJECT NO. 95233.02

TIP ELEV.	PENETR. (FT.)	BLOWS/ FT.	NOTES
-56	0	VERTICAL ML	4:30pm ML 70'
-64	8	START VIBRO	4:05pm 83
1/4 TURN	25		
-87	33	STOP VIBRO	4:12pm 108WL
-87	33	START VIBRO	4:33pm 108WL
		23	
	35	22	
		22	
		21	
		22	
		21	44B/m
	40	18	
		20	
		22	
		20	
1/4 TURN		15	
	45	18	44B/m
		20	44B/m
		17	
		22	
		22	
	50	24	
		29	

TIP ELEV.	PENETR. (FT.)	BLOWS/ FT.	NOTES
		25	
		26	
		27	
	55	42	
		37	
		33	
		35	
		30	46B/m
	60	41	
		39	48B/m
		40	
		46	
		27	44B/m
	65	32	
		41	46B/m
		73	44B/m
-122	67-6	58	46B/m
		STOP IMPACT	4:53pm 141-6WL

PILE LOCATION B 3 SB

DATE DRIVEN 2/8/96

PILE TYPE 24" x .5

TIP TYPE SF w/ CT

HAMMER TYPE DELMAG 30-13

RATED ENERGY 66100FT#

FOREMAN ED JEAN

EST. BERING CAP. _____

INITIAL LENGTH (S) 160'

CUTOFF LENGTH (S) 11

FINAL LENGTH 149

CUTOFF ELEV. 21

TIP ELEV. -122

COMMENTS 3:1

INSPECTOR: JN

Peratrovich, Nottingham & Drage, Inc.
Engineering Consultants
1506 West 36th Avenue Suite 101, ANCH. AK 99503
(907) 561-1011

ILE DRIVING RECORD

PROJECT NO. 95233.02

TIP ELEV.	PENETR. (FT.)	BLOWS/ FT.	NOTES
		START VIBRO VERTICAL	8:30am WL 75'
-62	0		
	9	LAY PILE OVER	
¼ TURN	15		
	30		7'/min
¼ TURN	37		
-103	43	STOP VIBRO	8:35am 122'
	43	START IMPACT	8:45am 122'
		12	
	45	24	44 B/m
		20	
		19	
		15	
		16	48 B/m
	50	17	
		18	
		15	
		13	
		12	
	55	10	
		9	
		9	
		10	
		9	48 B/m

TIP ELEV.	PENETR. (FT.)	BLOWS/ FT.	NOTES
	60	12	
		10	
		12	
		8	
¼ TURN		11	
	65	10	
	66	13	48 B/m
-124	66-6	5	
		STOP IMPACT	8:53am WL 146'

PILE LOCATION B1N8

DATE DRIVEN 2/16/96

PILE TYPE 24" x .5"

TIP TYPE SF W1 CT

HAMMER TYPE DELMAG D30-13

RATED ENERGY 66100 FT #

FOREMAN ED BEAN

EST. BERING CAP. ____

INITIAL LENGTH (S) 160'

CUTOFF LENGTH (S) 8

FINAL LENGTH 152

CUTOFF ELEV. 21'

TIP ELEV. -124

COMMENTS

3:1

INSPECTOR: JN

Peratrovich, Nottingham & Drage, Inc.
Engineering Consultants
1506 West 36th Avenue Suite 101, ANCH. AK 99503
(907) 561-1011

LE DRIVING RECORD

PROJECT NO. 95233-02

TIP ELEV.	PENETR. (FT.)	BLOWS/ FT.	NOTES
-39	0	START VIB MC	9 am WL 45
	½ TURN 17		
-61	25	STOP VIB	9:10am WL 70
		START IMPACT	9:30am WL 70
	24	16	
		23	
		21	
		19	
	30	18	40 B/m ~7'
		16	
		14	
		16	
		18	
	35	17	
		16	
		18	
		19	
		21	
	40	19	
		23	
		23	
		25	44 B/m
		32	
	45	37	
		36	
		24	
		36	
		39	44B/m
	50	40	
		36	44B/m
		52	
		38	40B/m
		59	40B/m
	55	84	
-88	55-61	56	9:55am WL 95

PILE LOCATION B3 E Batter

DATE DRIVEN 2/8/96

PILE TYPE 36" x .5"

TIP TYPE SF W/CT

HAMMER TYPE DELMAG D30-13

RATED ENERGY 66100 FT#

FOREMAN ED BEAN

EST. BERING CAP. _____

INITIAL LENGTH (S) 140

CUTOFF LENGTH (S) 19

FINAL LENGTH 121

CUTOFF ELEV. 21

TIP ELEV. -88

COMMENTS

PILE NOT IN POSITION - NEEDS TO BE PULLED EASTWARD 3' AT CUTOFF

INSPECTOR: JN









Piling Blow Count Data for Miner's Cove Project
Last Updated: 11/17/04

Final Proofing Date	Grid	Final Blows/inch	Length Below Cutoff (feet)	Plan Depth per Design	Material Ordered	Splices Below Estimated Plan Depth	Date Spliced	Splices Above Estimated Plan Depth	Date Spliced
10/29/2004	A-7	99	42.5	60	60				
10/29/2004	A-5	18	32.5	43	43				
10/29/2004	B-8	10	78	70	70			1	10/29/2004
10/29/2004	C-6	10	82	80	80			1	11/13 and 11/15
10/29/2004	C-7	10	89	85	80+6=86	1	10/28/2004	1	11/1/2004
10/29/2004	A-4	99	29.5	40	40				
10/29/2004	C-4	10	70	70	70				
10/30/2004	C-8	10	98	80	80+10=90	1	10/28/2004	1	10/29/2004
10/30/2004	B-7 north	10	54	65	60				
11/1/2004	B-7 south	4	105	65	80+25=107	1	10/30/2004		
11/2/2004	A-6 east	5	48	46	53				
11/2/2004	A-6 west	10	40	46	52				
11/4/2004	C-5 east	8	101	76	80+18=98		11/2/2004	1	11/4/2004
11/4/2004	C-5 west	8	72	75	80				
11/8/2004	B-6 north	9	49	60	56				
11/8/2004	B-6 south	4	98	80	80+23=103	1	11/6/2004		
11/9/2004	B-5 north	99	44	55	56				
11/9/2004	B-5 south	5	84	55	80+16=96	1	11/2 and 11/4		
11/9/2004	A-1A	10	27	40	40				
11/9/2004	A-3	10	26	40	40				
11/10/2004	C-1	10	55	50	60				
11/11/2004	A-2 west	5	36	40	45				
11/11/2004	C-3	99	63	55	65				
11/11/2004	A-2 east	10	34	40	45				
11/12/2004	C-1A	10	58	60	60				
11/12/2004	C-2 south	10	58	60	60				
11/12/2004	C-2 north	99	64	60	60				
11/13/2004	B-4 north	10	42	50	52				
11/13/2004	B-4 south	5	82	50	80+10=90	1	11/9/2004		
11/15/2004	B-3 north	99	40	50	52				
11/15/2004	B-3 south	4	70	50	78				
11/16/2004	B-2 north	99	41	50	52				
11/16/2004	B-2 south	9	62	50	67				
11/17/2004	B-1A	10	46	50	50				
11/17/2004	B-1	10	45	50	50				
					Totals	7		5	

