CITY & BOROUGH OF JUNEAU - DOCKS & HARBORS

DOWNTOWN WATERFRONT IMPROVEMENTS PHASE I

CBJ CONTRACT NO. DH19-014

VICINITY

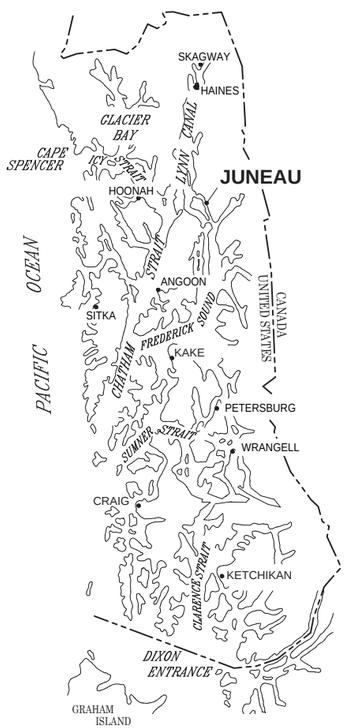

SOUTHEAST ALASKA

VICINITY MAP

SCALE IN FEET
0 400 800 FT.

TIDAL DATA

SOURCE: NOAA NOS/CO-OPS STATION ID: 9452210
JUNEAU, ALASKA 2/6/18

DESCRIPTION	ELEV. (FT.)
HIGHEST OBSERVED WATER LEVEL	+25.1
MEAN HIGHER HIGH WATER (MHHW)	+16.3
MEAN HIGH WATER (MHW)	+15.3
MEAN SEA LEVEL (MSL)	+8.6
MEAN TIDE LEVEL (MTL)	+8.5
MEAN LOW WATER (MLW)	+1.6
MEAN LOWER LOW WATER (MLLW)	0.0
LOWEST OBSERVED WATER LEVEL	-5.7

PND ENGINEERS, INC. (PND) IS NOT RESPONSIBLE FOR SAFETY PROGRAMS, METHODS OR PROCEDURES OF OPERATION, OR THE CONSTRUCTION OF THE DESIGN SHOWN ON THESE DRAWINGS. DRAWINGS ARE FOR THE USE OF THIS PROJECT ONLY AND ARE NOT INTENDED FOR REUSE WITHOUT WRITTEN APPROVAL FROM PND. DRAWINGS ARE ALSO NOT TO BE USED IN ANY MANNER THAT WOULD CONSTITUTE A DETRIMENT DIRECTLY OR INDIRECTLY TO PND.

PND ENGINEERS, INC.
9360 Glacier Highway Ste 100
Juneau, Alaska 99801
Phone: 907-586-2093
Fax: 907-586-2099
www.pndengineers.com

DESIGN: CRS CHECKED: CRS
DRAWN: PJD APPROVED: CRS
SCALE: AS SHOWN

STATE OF ALASKA 49TH Charles R. Somerville CE-8845 REGISTERED PROFESSIONAL ENGINEER
DATE: 5/23/2019

DOWNTOWN WATERFRONT IMPROVEMENTS PHASE I
CBJ CONTRACT NO. DH19-014

SHEET TITLE:
TITLE SHEET AND VICINITY MAP

PND PROJECT NO.: 182045 C.A.N. NO.: AECC250

G1.01

DRAWING INDEX

DWG NO.	TITLE
	GENERAL
G1.01	TITLE SHEET AND VICINITY MAP
G1.02	DRAWING INDEX
G1.03	GENERAL NOTES, LEGEND AND ABBREVIATIONS
G1.04	EXISTING CONDITIONS, SURVEY CONTROL AND BOREHOLE LOCATIONS
G1.05	DEMOLITION SITE PLAN
G1.06	DEMOLITION SECTIONS & PHOTOS
G1.07	DEMOLITION SECTIONS & PHOTOS
G1.08	DEMOLITION SECTIONS
G1.09	DEMOLITION DETAILS
G1.10	OVERALL SITE PLAN
G1.11	STAGING AREAS
	CIVIL
C1.01	PARTIAL SITE PLAN
C1.02	PARTIAL CONCRETE DECK GRADING PLANS
C1.03	POINT LAYOUT TABLES
C1.04	TYPICAL SITE SECTIONS
C1.05	TYPICAL SITE SECTIONS
C1.06	CIVIL DETAILS
C1.07	STORM DRAIN PLAN
C1.08	WATER & SEWER UTILITY PLAN
C1.09	STORM DRAIN DETAILS
C1.10	STORM DRAIN DETAILS
C1.11	WATER & SEWER DETAILS
C1.12	WATER & SEWER DETAILS
C1.13	STRIPING & SIGNAGE PLAN
C1.14	STRIPING, BUMPER CURB & DRIVEWAY CURB CUT
C1.15	APPROACH DOCK UTILITIES EXISTING CONDITION
C1.16	APPROACH DOCK UTILITIES REPLACEMENT PLAN
C1.17	APPROACH DOCK UTILITIES SUPPORT DETAILS

DRAWING INDEX (CONT.)

DWG NO.	TITLE
	STRUCTURAL
S1.01	STRUCTURAL GENERAL NOTES
S1.02	PILE SCHEDULES
S1.03	PILE TYPICAL DETAILS
S1.04	PILE TYPICAL DETAILS
S1.05	TYPICAL DOCK FRAMING DETAILS
S1.06	TYPICAL DOCK FRAMING DETAILS
S1.07	LIGHT POLE TYPICAL DETAILS
S1.08	LIGHT POLE TYPICAL DETAILS
S1.09	CONCRETE RETAINING WALL PLAN AND PROFILE
S1.10	CONCRETE RETAINING WALL SECTIONS
S1.11	CONCRETE RETAINING WALL SECTIONS AND DETAILS
S1.12	CONCRETE RETAINING WALL DETAILS
S1.13	CONCRETE RETAINING WALL PEDESTAL DETAILS
S1.14	CONCRETE RETAINING WALL DETAILS
S1.15	TRANSITION PLATE PARTIAL PLAN AND SECTION
S1.16	TRANSITION PLATE LAYOUT
	STRUCTURAL - CONCRETE DECK
S2.01	CONCRETE DECK PARTIAL PLAN
S2.02	CONCRETE DECK ELEVATION AND SECTION
S2.03	CONCRETE DECK FRAMING PLAN
S2.04	PILE CAP PLAN
S2.05	PILE CAP PLAN
S2.06	PILE CAP PLAN
S2.07	CONCRETE DECK SECTIONS
S2.08	CONCRETE DECK DETAILS
S2.09	CONCRETE DECK DETAILS
S2.10	CONCRETE DECK RAILING SECTIONS AND ELEVATIONS
S2.11	CONCRETE WALL SECTIONS AND MISCELLANEOUS RAILING DETAIL
S2.12	MISCELLANEOUS RAILING DETAIL
S2.13	SWING GATE PLAN, ELEVATION, AND SECTION
S2.14	PARKING CANOPY PLAN
S2.15	PARKING CANOPY SECTIONS AND DETAILS
S2.16	PARKING CANOPY SECTIONS AND DETAILS
S2.17	PARKING CANOPY SECTIONS AND DETAILS
S2.18	ACCESS PLATFORM

DRAWING INDEX (CONT.)

DWG NO.	TITLE
	STRUCTURAL - TIMBER DECK
S3.01	TIMBER DECK PARTIAL PLAN
S3.02	TIMBER DECK SECTION
S3.03	TIMBER DECK FRAMING PLAN
S3.04	TIMBER DECK OVER FRAMING
S3.05	PILE CAP PLAN
S3.06	PILE CAP PLAN
S3.07	ADA APPROACH RAMP ELEVATION AND SECTION
S3.08	TIMBER DECK SECTIONS AND DETAILS
S3.09	TIMBER OVER FRAMING DETAILS
S3.10	PEDESTRIAN GUARDRAIL ELEVATION
S3.11	PEDESTRIAN GUARDRAIL DETAILS
S3.12	PEDESTRIAN GUARDRAIL SECTION AND DETAILS
	STRUCTURAL - TIMBER DECK MODIFICATION
S4.01	SEAWALK MODIFICATIONS PLAN / ELEVATION
S4.02	SEAWALK MODIFICATIONS PLAN AND SECTIONS
S4.03	SEAWALK MODIFICATION DETAILS
S4.04	SEAWALK DECK MODIFICATION DETAILS
S4.05	SEAWALK DECK MODIFICATION DETAILS
	STRUCTURAL - ANODES
S5.01	PILE ANODES
	LANDSCAPE
L1.01	CONCRETE PAVING FINISH LAYOUT PLAN
	ELECTRICAL
E1.01	OVERALL SITE PLAN - ELECTRICAL 1 OF 3
E1.02	OVERALL SITE PLAN - ELECTRICAL 2 OF 3
E1.03	OVERALL SITE PLAN - ELECTRICAL 3 OF 3
E1.04	PARTIAL CONCRETE DECK & TRENCH DETAIL - ELECTRICAL
E2.01	SINGLE LINE DIAGRAM
E2.02	EQUIPMENT & PANEL SCHEDULES
E2.03	ELECTRICAL RACK ELEVATION
E3.01	20' POLE DETAILS
E3.02	12' POLE DETAILS, LIGHT POLE TABLE & LUMINAIRE SCHEDULE
E3.03	LTG CONTROL SCHEMATIC & FUTURE POWER SINGLE LINE
E3.04	PARKING CANOPY PLAN - ELECTRICAL
E3.05	PARKING CANOPY SECTIONS AND DETAILS - ELECTRICAL
E4.01	FIBER CABLE RISER DIAGRAM
E4.02	EXISTING & NEW ACS RISER DIAGRAM
E4.03	CAMERA SCHISMATIC

CITY & BOROUGH OF JUNEAU
DOCKS & HARBORS

REVISIONS

REV.	DATE	DESCRIPTION	DWN.	CKD.	APP.

PND ENGINEERS, INC.
9360 Glacier Highway Ste 100
Juneau, Alaska 99801
Phone: 907-586-2093
Fax: 907-586-2099
www.pndengineers.com

DESIGN: PJD CHECKED: CRS
DRAWN: PJD APPROVED: CRS
SCALE: NA

STATE OF ALASKA 49TH Charles R. Somerville CE-8845 REGISTERED PROFESSIONAL ENGINEER
DATE: 5/23/2019

DOWNTOWN WATERFRONT IMPROVEMENTS
PHASE I
CBJ CONTRACT NO. DH19-014

SHEET TITLE: **DRAWING INDEX**

PND PROJECT NO.: 182045 C.A.N. NO.: AECC250

G1.02

GENERAL NOTES

1. EROSION AND POLLUTION CONTROL PLANS

   THE CONTRACTOR SHALL DEVELOP AND SUBMIT FOR ENGINEER AND AGENCY REVIEW AND APPROVAL A STORM WATER POLLUTION PREVENTION PLAN (SWPPP). THIS PLAN SHALL INCLUDE AN EROSION AND SEDIMENT CONTROL PLAN BASED UPON THE CONTRACTOR'S SCHEDULING, EQUIPMENT AND WORK. TO THE GREATEST EXTENT POSSIBLE FOLLOW THE ALASKA DEPARTMENT OF TRANSPORTATION AND PUBLIC FACILITIES (ADOT/PF) ALASKA STORM WATER POLLUTION PREVENTION PLAN GUIDE (ASWPPPG). THE PLAN SHALL CONSIDER FIRST PREVENTING EROSION, THEN MINIMIZING AND TRAPPING SEDIMENT PRIOR TO ITS ENTERING THE WATERWAYS. THE PLAN MUST ADDRESS THE SITE-SPECIFIC CONTROLS AND MANAGEMENT FOR THE CONSTRUCTION SITE AS WELL AS ALL MATERIAL SITES, WASTE DISPOSAL SITES AND AFFECTED AREAS. THE PLAN MUST INCORPORATE ALL THE REQUIREMENTS OF THE PROJECT PERMITS. BEST MANAGEMENT PRACTICES AS LISTED IN THE ASWPPPG SHALL BE USED.

   THE CONTRACTOR SHALL PREPARE A HAZARDOUS MATERIAL CONTROL PLAN (HMCP) FOR THE HANDLING, STORAGE, CLEAN-UP AND DISPOSAL OF PETROLEUM AND OTHER HAZARDOUS SUBSTANCES. THE CONTRACTOR SHALL LIST AND GIVE LOCATIONS OF ALL HAZARDOUS MATERIALS, INCLUDING FIELD OFFICE MATERIALS, TO BE USED AND STORED ON-SITE AND THEIR ESTIMATED QUANTITIES. THE PLAN SHALL PROVIDE DETAILS FOR STORING THESE MATERIALS AS WELL AS DISPOSING WASTE PETROLEUM PRODUCTS AND OTHER HAZARDOUS MATERIALS GENERATED BY THE PROJECT.

   IDENTIFY THE LOCATIONS WHERE HAZARDOUS MATERIAL STORAGE, FUELING AND MAINTENANCE ACTIVITIES WILL TAKE PLACE. IF ON-SITE, DESCRIBE THE MAINTENANCE ACTIVITIES AND LIST ALL CONTROLS TO PREVENT THE ACCIDENTAL SPILLAGE OF OIL, PETROLEUM PRODUCTS AND OTHER HAZARDOUS MATERIALS. DETAIL PROCEDURES FOR CONTAINMENT AND CLEANUP OF HAZARDOUS SUBSTANCES INCLUDING A LIST OF THE TYPES AND QUANTITIES OF EQUIPMENT AND MATERIALS AVAILABLE ON-SITE TO BE USED.

   THE PLAN SHALL PROVIDE DETAILS FOR PREVENTION, CONTAINMENT, CLEAN-UP AND DISPOSAL OF SOIL AND WATER CONTAMINATED BY ACCIDENTAL SPILLS AND FOR UNEXPECTED CONTAMINATED SOIL AND WATER ENCOUNTERED DURING CONSTRUCTION.

2. MATCH EXISTING GRADES AT PROJECT LIMITS AND WHERE REQUIRED TO MATCH ELEVATIONS AT EXISTING ROADS.

3. ALL REMOVED MATERIALS THAT ARE NOT SUITABLE FOR REUSE ON THE PROJECT SHALL BECOME THE PROPERTY OF THE CONTRACTOR AND PROPERLY DISPOSED OF AT AN APPROVED SITE.

4. THE LOCATIONS OF EXISTING FEATURES AND UTILITIES SHOWN ON THE DRAWINGS ARE APPROXIMATE. ADDITIONAL UTILITIES MAY BE PRESENT HOWEVER ARE NOT SHOWN. THE CONTRACTOR SHALL VERIFY ALL UTILITY LOCATIONS IN THE FIELD AS NECESSARY, PRIOR TO BEGINNING WORK. THE HORIZONTAL AND VERTICAL LOCATIONS OF ALL UTILITIES ENCOUNTERED IN THE FIELD SHALL BE RECORDED ON THE CONTRACTOR'S RECORD DRAWINGS. CONTACT LOCAL UTILITY COMPANIES PRIOR TO ANY/ ALL EXCAVATIONS AT THE FOLLOWING TELEPHONE NUMBERS:

DIAL BEFORE YOU DIG!
586-1333

UNDERGROUND POWER, TELEPHONE, T.V., COMMUNICATIONS, WATER AND SEWER LINES ARE IN THE AREA. UTILITIES SHOWN HERE DO NOT SUBSTITUTE FOR FIELD LOCATES.

5. CBJ ENGINEERING STANDARD DETAILS BOOK DATED APRIL, 2011 IS MADE A PART OF THIS CONTRACT, WITH CURRENT REVISIONS AS APPLICABLE. ADOT&PF STANDARD DETAILS, LATEST VERSION, ARE MADE A PART OF THIS CONTRACT.

6. PROPERTY DISTURBED DURING CONSTRUCTION OUTSIDE OF PROJECT LIMITS SHALL BE RESTORED TO ITS PRE-CONSTRUCTION CONDITION OR BETTER AT NO ADDITIONAL COST.

7. GRADING AND ALIGNMENT OF PIPE, STRUCTURES & FINAL SURFACING ARE SUBJECT TO MINOR REVISIONS BY THE ENGINEER TO FIT SITE CONDITIONS. GRADE ALL IMPROVEMENTS WITH POSITIVE DRAINAGE AWAY FROM STRUCTURES.

8. PROPERTY LINE LOCATIONS USED IN THESE PLANS ARE DERIVED FROM RECORD PLATS AND DO NOT REPRESENT A BOUNDARY SURVEY.

LEGEND

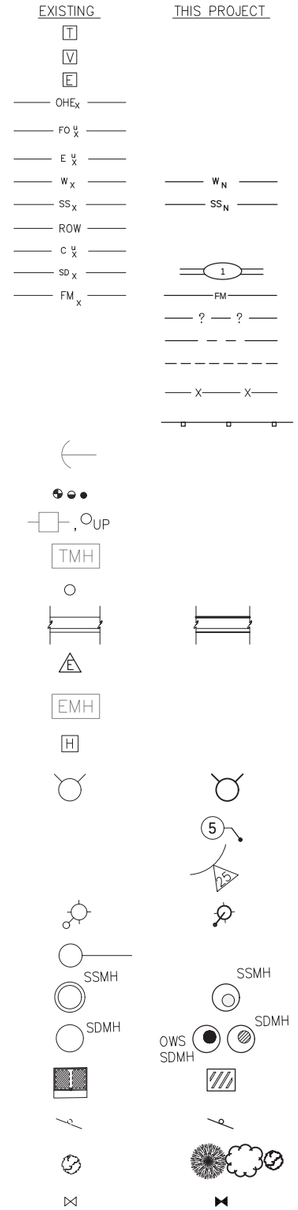

TELEPHONE PEDESTAL
TELEVISION PEDESTAL
ELECTRICAL PEDESTAL
OVERHEAD ELECTRICAL
BURIED FUEL LINE
ELECTRICAL (UNDERGROUND)
WATER
SANITARY SEWER
RIGHT-OF-WAY
COMMUNICATION (CABLE/TEL)
STORM DRAIN
FORCE MAIN
ESTIMATION OF LAYER
PROPERTY LINE
CROWN
GEOTEXTILE FABRIC
GUARDRAIL
GUY WIRE ANCHOR
SURVEY CONTROL
UTILITY POLE
TELEPHONE VAULT
BOLLARD
CURB & GUTTER
ELECTRICAL TRANSFORMER
ELECTRICAL VAULT
ELECTRICAL HANDHOLE
FIRE HYDRANT
LAYOUT POINT
LAYOUT RADIUS
LUMINAIRE POLE
TRAFFIC SIGNAL
SANITARY SEWER MANHOLE
STORM DRAIN MANHOLE
STORM DRAIN INLET
SIGN
TREE/VEGETATION
WATER VALVE

ABBREVIATIONS

A	
@	AT
AC	ASBESTOS CEMENT PIPE
ACP	ASPHALT CONCRETE PAVEMENT
ADA	AMERICANS WITH DISABILITIES ACT
ADJ	ADJUSTABLE
APF	ASSOCIATED PILE AND FITTING CORP.
APPROX. or APPX.	APPROXIMATE
ATS	ALASKA TIDELANDS SURVEY
AV	AIR RELEASE VALVE
B	
BCC	BEGINNING OF CURB CUT
BFV	BUTTERFLY VALVE
BLDG	BUILDING
BOP	BEGINNING OF PROJECT
BTM, BOT	BOTTOM
BTWN	BETWEEN
C	
C&G	CURB & GUTTER
CB	CATCH BASIN
CBJ	CITY & BOROUGH OF JUNEAU
CI	CAST IRON
CIP	CAST-IN-PLACE
CJ	CONTROL JOINT
℄	CENTER LINE
CLR	CLEAR
CMP	CORRUGATED METAL PIPE
CO	CLEANOUT
C.O.E.	CORPS OF ENGINEERS
COMM	COMMUNICATION
CONC.	CONCRETE
CP	COMPLETE PENETRATION
CPEP/CPP	CORRUGATED POLYETHYLENE PIPE
COR	CORNER
CSC	COUNTERSINK
CTE	CONNECT TO EXISTING
CTR	CENTER
CY	CUBIC YARD
D	
DCP	DISSIMILAR PIPE COUPLING
D/DIA	DIAMETER
DBL	DOUBLE
DEMO	DEMOLITION
DL	DEAD LOAD
DIP	DUCTILE IRON PIPE
DIM	DIMENSION
DN	DOWN
DTL	DETAIL
E	
E	EAST
EA.	EACH
EC	EDGE OF CONCRETE
ECC	END OF CURB CUT
EG	EXISTING GRADE
EJ	EXPANSION JOINT
EL/ELEV	ELEVATION
ELEL	ELECTRICAL
EOP	END OF PAVEMENT
EQ	EQUAL
EQUIP	EQUIPMENT
EST	ESTIMATE
EW	EACH WAY
EXC	EXCAVATE
EXIST	EXISTING
F	
FC	FACE OF CURB
FD	FLOOR DRAIN
FF	FINISHED FLOOR
FG	FINISHED GRADE
FH	FIRE HYDRANT, FLAT HEAD
FIN	FINISH (ED)
FM	FORCE MAIN SEWER
FND	FOUNDATION
FOC	FACE OF CURB
FT	FOOT
FTG	FOOTING
FL	FLOWLINE OR FLANGE
G	
GALV	GALVANIZED
GB	GRADE BREAK
GRD	GROUND
GRS	GALVANIZED RIGID STEEL
GV	GATE VALVE
H	
H&T	HUB & TACK
HD	HEAVY DUTY
HDG	HOT-DIPPED GALVANIZED
HDPE	HIGH DENSITY POLYETHYLENE
HORIZ	HORIZONTAL
HSE	HOUSE
HT	HEIGHT
HWY.	HIGHWAY
I	
IAW	IN ACCORDANCE WITH
ID	INSIDE DIAMETER
IE	INVERT ELEVATION
IN	INCH
IP	IRON PIPE
INCL	INCLUDE (D) (ING)
INSUL	INSULATE (D) (ION)
INV	INVERT
J	
JB	JUNCTION BOX
L	
LBS	POUNDS
LF	LINEAR FEET
LL	LIVE LOAD
LOC	LOCATION
LS	LUMP SUM
M	
MAX	MAXIMUM
M.E.	MATCH EXISTING
MECH	MECHANICAL
MFR	MANUFACTURE (R)
MH	MANHOLE
MJ	MECHANICAL JOINT
MI	MALLEABLE IRON
MIN	MINIMUM
MLLW	MEAN LOWER LOW WATER
MSF	1000 SQUARE FEET
MSE	MECHANICALLY STABILIZED EARTH
MTL	MATERIAL (S)
N	
N	NORTH
NFS	NON FROST SUSCEPTIBLE
NIC	NOT IN CONTRACT
NO	NUMBER
NTS	NOT TO SCALE
O	
OBD	OVERBURDEN
OC	ON CENTER
OD	OUTSIDE DIAMETER
OG	ORIGINAL GOUND
OHE	OVERHEAD ELECTRICAL
OS	OWNER SUPPLIED
OWS	OIL-WATER SEPARATOR
OPP	OPPSITE
P	
P	PIPE
PC	POINT OF CURVATURE, PIECE
PCC	PRECAST CONCRATE POINT OF COMPOUND CURVATURE
PE	POLYETHYLENE
PED	PEDESTAL
PER	PERIMETER
PERF	PERFORATE (D)
PI	POINT OF INTERSECTION
PLWD	PLYWOOD
PL	PROPERTY LINE, PLATE
POC	POINT OF CURVE
PP	POLYPROPYLENE
PRC	POINT OF REVERSE CURVATURE
PROJ	PROJECT
PRKG	PARKING
PRV	PRESSURE REDUCING VALVE
PSI	POUND PER SQUARE INCH
PT	POINT, PRESSURE TREATED, POINT OF TANGENCY
PVC	POINT OF VERTICAL CURVATURE, POLY-VINYL CHLORIDE
PVI	POINT OF VERTICAL INTERSECTION
Q	
QTY	QUANTITY
R	
RAD	RADIUS
RE	RIM ELEVATION
REF	REFERENCE
REINF	REINFORCEMENT
REQD	REQUIRED
RET	RETAINING
RO	ROUGH OPENING
ROW	RIGHT OF WAY
S	
S	SOUTH
SCHED/SCH	SCHEDULE
SD	STORM DRAIN
SDI	STORM DRAIN INLET STRUCTURE
SDO	STORM DRAIN OUTLET STRUCTURE
SDR	STANDARD DIMENSION RATIO
SF	SQUARE FOOT
SHLDR	SHOULDER
SI	STREET INTERSECTION
SPEC	SPECIFICATION (S)
SQ	SQUARE
SRB	SHOT ROCK BORROW
SSC	SANITARY SEWER CONNECTION
SS	STAINLESS STEEL, SANITARY SEWER
SDMH	STORM DRAIN MANHOLE
SSMH	SANITARY SEWER MANHOLE
STA	STATION
STD	STANDARD
STL	STEEL
STRG	STRONG
SW	SIDEWALK
SWR	SEWER
SY	SQUARE YARD
SYM	SYMMETRICAL
T	
t	THICK
T&B	TOP AND BOTTOM
T&G	TONGUE AND GROOVE
TBC	TOP BACK OF CURB
TBD	TO BE DETERMINED
TBM	TEMPORARY BENCH MARK
TD	TRENCH DRAIN
TEL	TELEPHONE
TEMP	TEMPERATURE, TEMPORARY
TH	TEST HOLE
THK	THICK
TRANS	TRANSVERSE
TV	TELEVISION
TYP	TYPICAL
U	
UAMH	UTILITY ACCESS MANHOLE
UBC	UNIFORM BUILDING CODE
UE	UNDERGROUND ELECTRIC
UMC	UNIFORM MECHANICAL CODE
UHMW	ULTRA HIGH MOLECULAR WEIGHT
UON/UNO	UNLESS OTHERWISE NOTED
UPC	UNIFORM PLUMBING CODE
V	
VB	VALVE BOX
VERT	VERTICAL
VG	VALLEY GUTTER
W	
W	WEST
W/	WITH
WD	WOOD
WELDMT	WELDMENT
WL	WATERLINE
WQU	WATER QUALITY UNIT
WV	WATER VALVE
WW	WATER WATER
WWTP	WASTE WATER TREATMENT PLANT
W/O	WITHOUT
X	
XFMR	TRANSFORMER
<PT	ANGLE POINT

REVISIONS

REV.	DATE	DESCRIPTION	DWN.	CKD.	APP.

PND ENGINEERS, INC.
9360 Glacier Highway Ste 100
Juneau, Alaska 99801
Phone: 907-586-2093
Fax: 907-586-2099
www.pndengineers.com

DESIGN: CRS CHECKED: CRS
DRAWN: PJD APPROVED: CRS
SCALE: AS SHOWN

STATE OF ALASKA 49TH Charles R. Somerville CE-8845 REGISTERED PROFESSIONAL ENGINEER
DATE: 5/23/2019

DOWNTOWN WATERFRONT IMPROVEMENTS PHASE I
CBJ CONTRACT NO. DH19-014

SHEET TITLE:
GENERAL NOTES LEGEND AND ABBREVIATIONS

PND PROJECT NO.: 182045 C.A.N. NO.: AECC250

G1.03

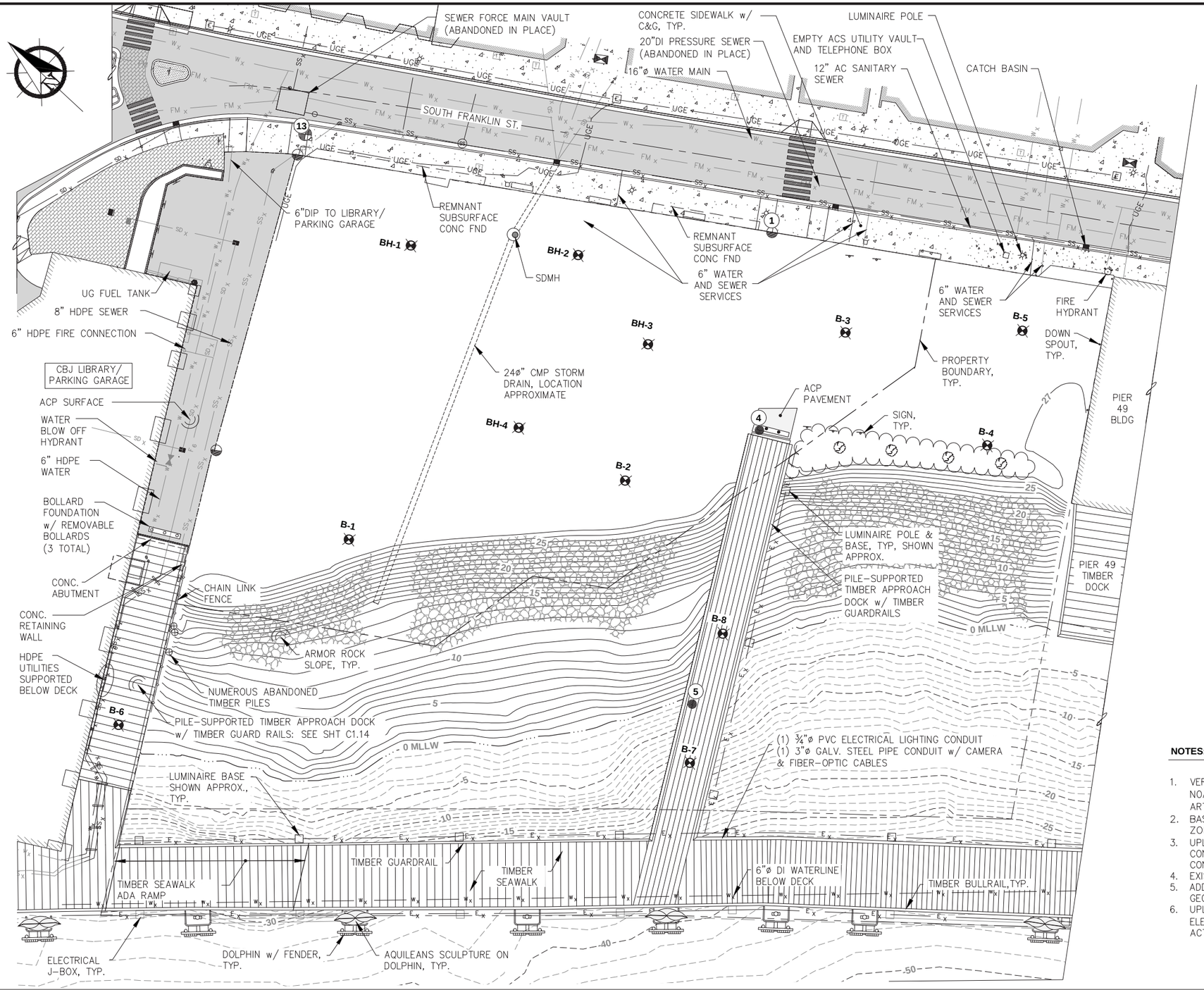

SURVEY CONTROL TABLE

POINT	NORTHING	EASTING	ELEV. (FT)	DESCRIPTION
1	2361748.24	2544358.72	27.63	FND RBR
4	2361701.84	2544298.28	27.89	PK NAIL
5	2361649.44	2544208.96	28.24	PK NAIL
13	2361898.34	2544259.15	28.26	FND MONUMENT

LEGEND

B-1 — PND ENGINEERS, INC.: BOREHOLE, (2018)

BH-1 — PND ENGINEERS, INC.: BOREHOLE, (2016)

NOTES:

1. VERTICAL DATUM IS MEAN LOWER LOW WATER (MLLW = 0 FEET) BASED ON A GPS RTK TIE TO NOAA BENCH MARK "2210 K 2011" LOCATED AT THE BASE OF A FLAGPOLE BY THE JUNEAU ARTS/CULTURE CENTER WITH A PUBLISHED ELEVATION OF 27.10' MLLW.
2. BASIS OF COORDINATES FOR THIS SURVEY ARE NAD 83 (2011) ALASKA STATE PLANE ZONE 1 IN U.S. SURVEY FEET.
3. UPLAND TOPOGRAPHY BASED UPON COMBINED FIELD SURVEYS BY PND ENGINEERS, INC. (PND) CONDUCTED IN 2017 AND 2018. BATHYMETRY BASED UPON COMBINED BATHYMETRIC SURVEYS CONDUCTED BY WILLIAMS AND ASSOCIATES, 2011 AND PND 2017.
4. EXISTING UTILITIES ARE SHOWN APPROXIMATELY BETWEEN SURVEY POINTS.
5. ADDITIONAL GEOTECHNICAL DATA IS AVAILABLE IN THE DOWNTOWN WATERFRONT IMPROVEMENTS GEOTECHNICAL REPORT, DATED APRIL 2019, PREPARED BY PND.
6. UPLANDS TOPOGRAPHIC CONTOURS UNAVAILABLE DUE TO ONGOING DEMOLITION ACTIVITIES. UPLAND ELEVATIONS TO VARY FROM +27' TO +29' MLLW FOLLOWING COMPLETION OF DEMOLITION ACTIVITIES.

CITY & BOROUGH OF JUNEAU — DOCKS & HARBORS

REVISIONS

REV.	DATE	DESCRIPTION	DWN.	CKD.	APP.

PND ENGINEERS, INC.
9360 Glacier Highway Ste 100
Juneau, Alaska 99801
Phone: 907-586-2093
Fax: 907-586-2099
www.pndengineers.com

DESIGN: CRS CHECKED: CRS
DRAWN: PJD APPROVED: CRS
SCALE: SCALE IN FEET 0 20 40 FT.

STATE OF ALASKA — 49TH — Charles R. Somerville CE-8845 — REGISTERED PROFESSIONAL ENGINEER
DATE: 5/23/2019

DOWNTOWN WATERFRONT IMPROVEMENTS PHASE I

CBJ CONTRACT NO. DH19-014

SHEET TITLE: EXISTING CONDITIONS, SURVEY CONTROL AND BOREHOLE LOCATIONS

G1.04

PND PROJECT NO.: 182045 C.A.N. NO.: AECC250

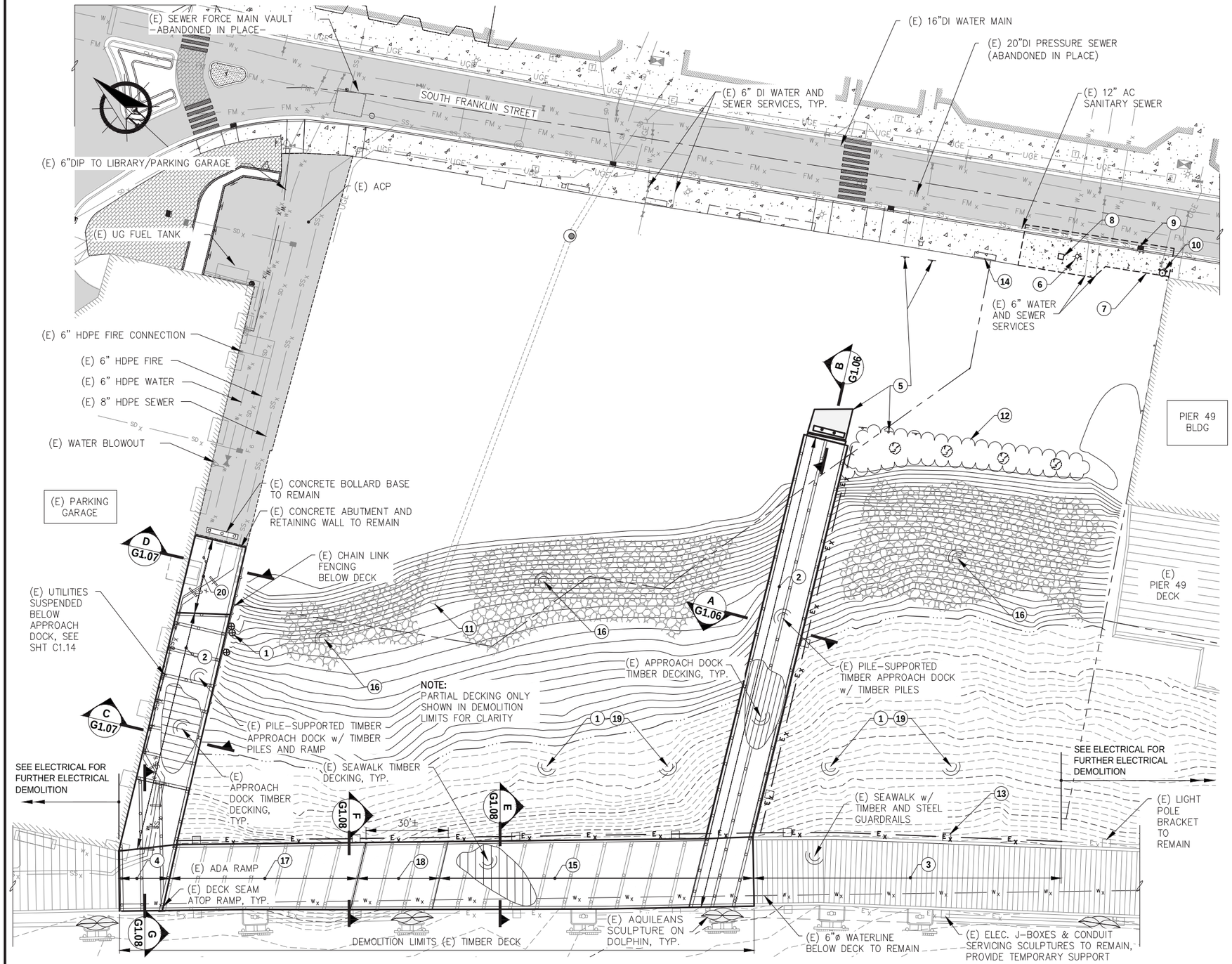

GENERAL NOTES

A	ALL DEMOLISHED TIMBER PILES, CAPS, STRINGERS, DECKING AND ASSOCIATED MATERIALS SHALL BECOME PROPERTY OF THE CONTRACTOR AND SHALL BE REMOVED FROM SITE AND DISPOSED.
B	(E) INDICATES EXISTING ENTITIES.
C	CONTRACTOR SHALL REMOVE ALL (E) PILES IN THEIR ENTIRETY BELOW NEW DOCK FRAMING LIMITS.
D	SAFETY BARRIERS SHALL BE PROVIDED ALONG (E) SEAWALK ONCE (E) GUARDRAIL IS REMOVED & SHALL REMAIN UNTIL PERMANENT IMPROVEMENTS ARE COMPLETED.
E	SEAWALK IS TO REMAIN OPEN TO PUBLIC DURING CONSTRUCTION. SHORT CLOSURES WILL BE EVALUATED ON A CASE BY CASE BASIS FOR SAFETY DURING CONSTRUCTION ACTIVITIES.

DEMOLITION SUMMARY

1	DEMOLISH ALL (E) ABANDONED TIMBER PILES & CONCRETE SECTIONS.
2	DEMOLISH (E) TIMBER DOCK INCLUDING ALL FENCING, DECKING, STRINGERS, CAPS, GUARDRAILS AND PILES; EXTRACT (E) TIMBER PILES IN THEIR ENTIRETY; TEMPORARILY SUPPORT (E) UTILITIES.
3	DEMOLISH (E) TIMBER & STEEL GUARDRAIL ALONG SHORE SIDE OF SEAWALK.
4	DEMOLISH (E) DECKING AND BULLRAIL
5	DEMOLISH (E) CONCRETE ABUTMENT & ACP; SALVAGE ALL SIGNS, BOLLARDS AND BOLLARD BASES.
6	SALVAGE (E) LUMINAIRE AND LIGHT POLE.
7	DEMOLISH (E) CONCRETE SIDEWALK, CURB AND GUTTER.
8	SALVAGE (E) ACS UTILITY VAULT – SEE ELECTRICAL PLANS.
9	DEMOLISH SD CATCH BASIN INLET FRAME AND GRATE, & SHORT SECTION OF CMP TO FIT NEW STORM DRAIN INLET FRAME & GRATE.
10	DEMOLISH (E) FIRE HYDRANT – SEE CIVIL PLANS.
11	DEMOLISH CORRODED END OF (E) CMP CULVERT TO LIMITS PER ENGINEER; MAINTAIN DRAINAGE WHILE CONSTRUCTING NEW WALL.
12	CLEAR & GRUB ALL (E) VEGETATION.
13	DEMOLISH ALL (E) SHORESIDE LUMINAIRE POLES AND LUMINAIRE BASES AND (E) ELECTRICAL CONDUITS & CONDUCTORS, SEE ELECTRICAL FOR FIBER OPTIC LINE SALVAGE.
14	SALVAGE ALL (E) BENCHES ALONG SIDEWALK (4 EA).
15	DEMOLISH (E) TIMBER DECKING, BULLRAIL, GUARDRAIL. SALVAGE ELEMENTS AS SHOWN IN DETAILS.
16	SALVAGE ALL (E) ARMOR ROCK, STOCKPILE ON-SITE AND REUSE.
17	SALVAGE (E) STRINGERS; DEMOLISH (E) DECKING, BULLRAILS & GUARDRAILS.
18	DEMOLISH (E) DECKING, STRINGERS, BULLRAILS & GUARDRAILS.
19	DEMOLISH ALL OBSTRUCTIONS WITHIN 5' OF SURFACE @ NEW PILE LOCATIONS
20	SALVAGE DECKING & STRINGERS; DEMOLISH GUARDRAIL, CAPS, FENCING AND PILES; SALVAGE ABUTMENT CONNECTION PLATES; PROVIDE TEMPORARY SUPPORT FOR (E) UTILITIES

DEMOLISH = REMOVE & DISPOSE AT CONTRACTOR PROVIDED DISPOSAL SITE.

SALVAGE = REMOVE, SAVE & SUITABLY STORE AT OWNER DESIGNATED LOCATION OR RELOCATE AS SHOWN ON PLANS. OWNER'S DESIGNATED STORAGE LOCATION SHALL BE WITHIN 5 MILES OF PROJECT SITE. CONTRACTOR SHALL BE RESPONSIBLE FOR ALL TRANSPORTING, LOADING, UNLOADING AND GENERAL HANDLING OF SALVAGED MATERIALS. STORAGE OF SALVAGED MATERIALS SHALL BE COORDINATED WITH THE OWNER AT ALL TIMES. SPECIFIC LOCATIONS FOR MATERIALS TO BE SALVAGED AND STORED SHALL BE DICTATED BY THE OWNER AND SHALL BE AT THE OWNER'S SOLE DISCRETION. THE CONTRACTOR SHALL BE RESPONSIBLE FOR ANY DAMAGE INCURRED DUE TO HIS ACTIVITIES. DAMAGED MATERIALS SHALL BE REPAIRED OR REPLACED AT NO COST TO THE OWNER.

CITY & BOROUGH OF JUNEAU
DOCKS & HARBORS

REVISIONS

REV.	DATE	DESCRIPTION	DWN.	CKD.	APP.

PND ENGINEERS, INC.
9360 Glacier Highway Ste 100
Juneau, Alaska 99801
Phone: 907-586-2093
Fax: 907-586-2099
www.pndengineers.com

DESIGN: MDS CHECKED: CRS
DRAWN: PJD APPROVED: CRS
SCALE: SCALE IN FEET 0 20 40 FT.

STATE OF ALASKA 49TH Charles R. Somerville CE-8845 REGISTERED PROFESSIONAL ENGINEER
DATE: 5/23/2019

DOWNTOWN WATERFRONT IMPROVEMENTS PHASE I

CBJ CONTRACT NO. DH19-014

SHEET TITLE:

DEMOLITION SITE PLAN

G1.05

PND PROJECT NO.: 182045 C.A.N. NO.: AECC250

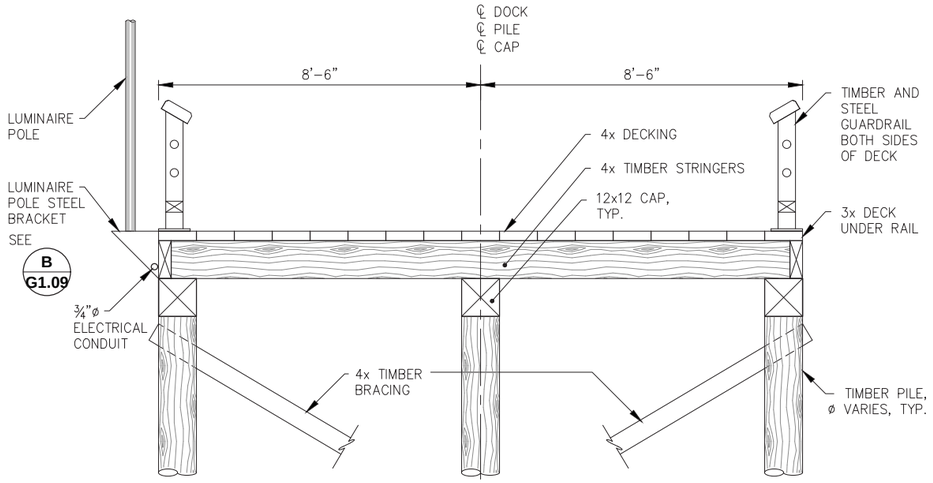

A G1.05 EXISTING APPROACH DOCK SECTION

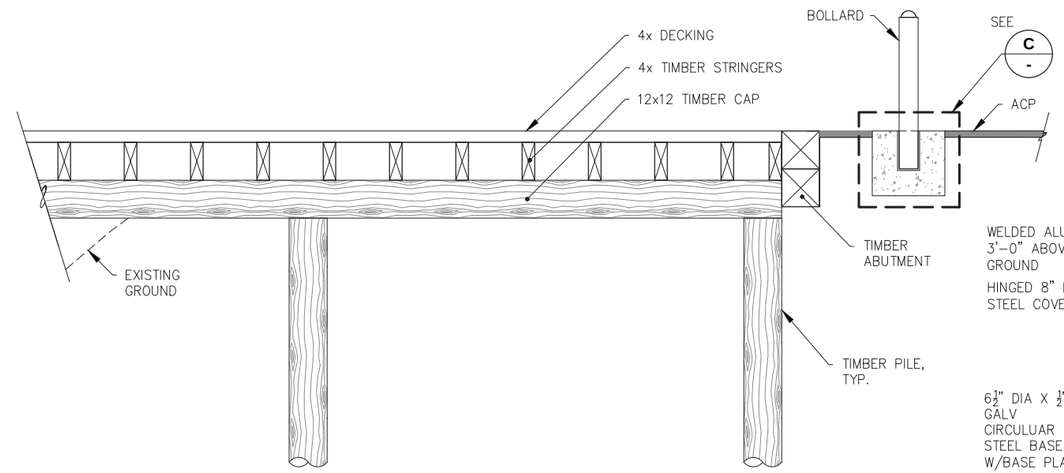

B G1.05 EXISTING APPROACH DOCK TIMBER ABUTMENT SECTION

NOTE:
GUARDRAIL, LUMINAIRE AND ELECTRICAL APPURTENANCES NOT SHOWN FOR CLARITY

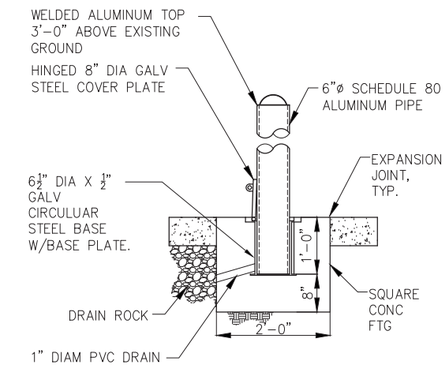

C BOLLARD BASE DETAIL

EXSTING APPROACH DOCK

EXISTING BOLLARDS AND ABUTMENT

EXISTING BOLLARDS AND APPROACH DOCK

REVISIONS

REV.	DATE	DESCRIPTION	DWN.	CKD.	APP.

PND ENGINEERS, INC.
9360 Glacier Highway Ste 100
Juneau, Alaska 99801
Phone: 907-586-2093
Fax: 907-586-2099
www.pndengineers.com

DESIGN: MDS CHECKED: CRS
DRAWN: PJD APPROVED: CRS
SCALE: AS SHOWN

STATE OF ALASKA 49TH Charles R. Somerville CE-8845 REGISTERED PROFESSIONAL ENGINEER
DATE: 5/23/2019

DOWNTOWN WATERFRONT IMPROVEMENTS PHASE I
CBJ CONTRACT NO. DH19-014

SHEET TITLE: **DEMOLITION SECTIONS & PHOTOS**

PND PROJECT NO.: 182045 C.A.N. NO.: AECC250

G1.06

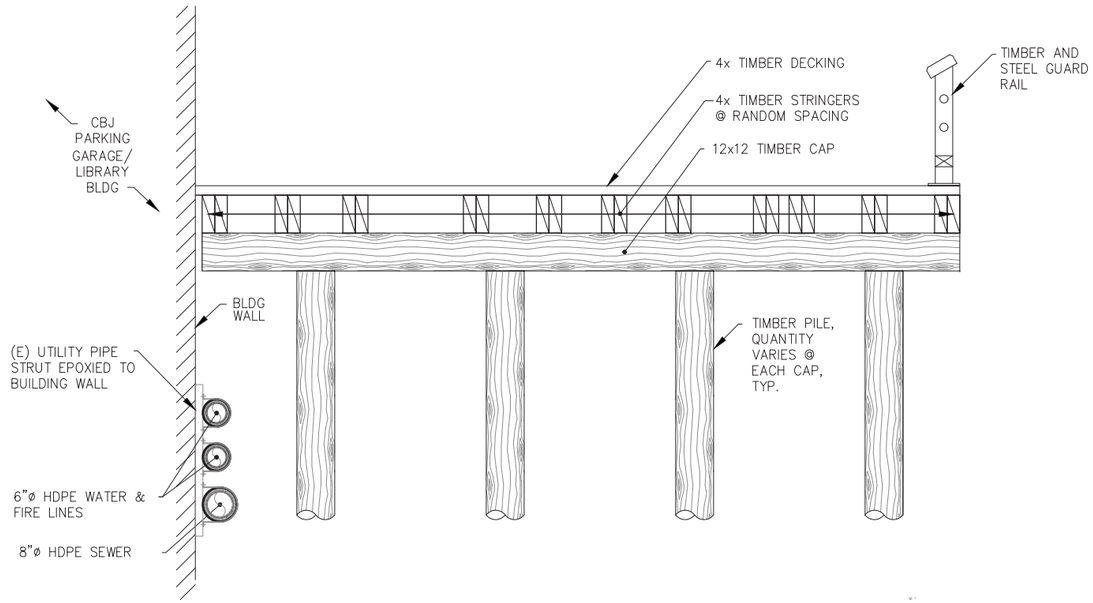

C G1.05 EXISTING APPROACH DOCK ADJACENT PARKING GARAGE SECTION

NOTE: STRINGERS AND CAPS ARE NOT PERPENDICULAR, AND ARE SHOWN APPROXIMATE. LOCATION, QUANTITY, SPACING AND ORIENTATION VARY THROUGHOUT STRUCTURE. DEMOLISH ALL.

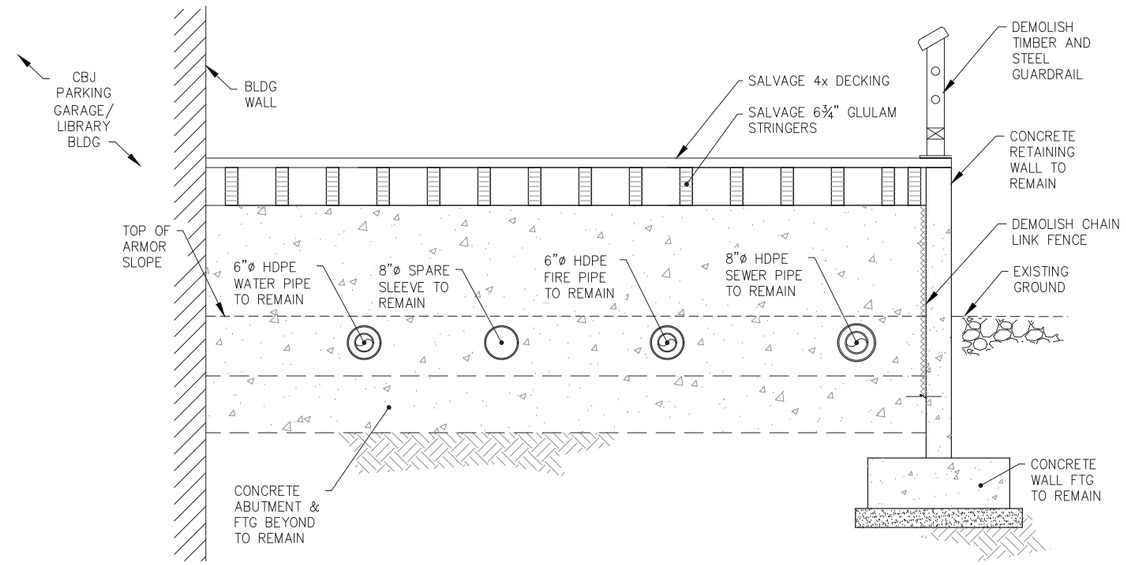

D G1.05 EXISTING APPROACH DOCK RAMP AT CONCRETE RETAINING WALL AND ABUTMENT SECTION

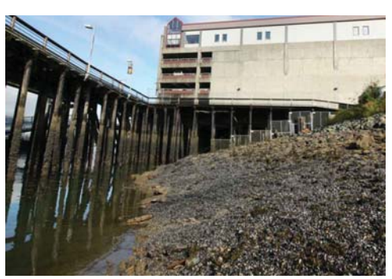
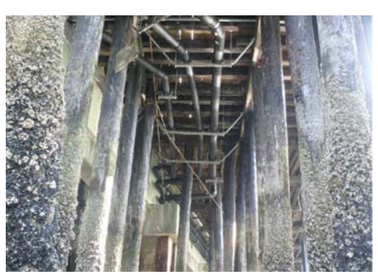

EXISTING APPROACH DOCK & UTILITIES ADJACENT PARKING GARAGE

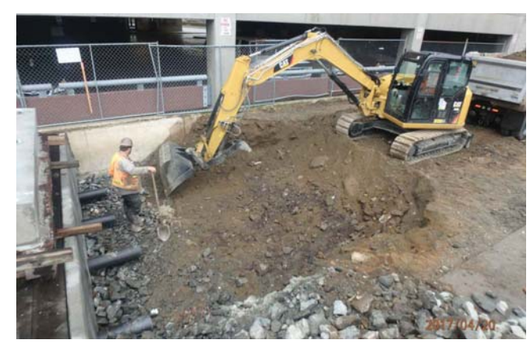

EXISTING ABUTMENT & UTILITIES ADJACENT PARKING GARAGE

NOTE: PHOTO DURING PRIOR CONSTRUCTION PROGRESS

REVISIONS

REV.	DATE	DESCRIPTION	DWN.	CKD.	APP.

P N D ENGINEERS, INC.
9360 Glacier Highway Ste 100
Juneau, Alaska 99801
Phone: 907-586-2093
Fax: 907-586-2099
www.pndengineers.com

DESIGN: MDS CHECKED: CRS
DRAWN: PJD APPROVED: CRS
SCALE: AS SHOWN

STATE OF ALASKA 49TH Charles R. Somerville CE-8845 REGISTERED PROFESSIONAL ENGINEER
DATE: 5/23/2019

DOWNTOWN WATERFRONT IMPROVEMENTS PHASE I
CBJ CONTRACT NO. DH19-014

SHEET TITLE: **DEMOLITION SECTIONS & PHOTOS**

PND PROJECT NO.: 182045 C.A.N. NO.: AECC250

G1.07

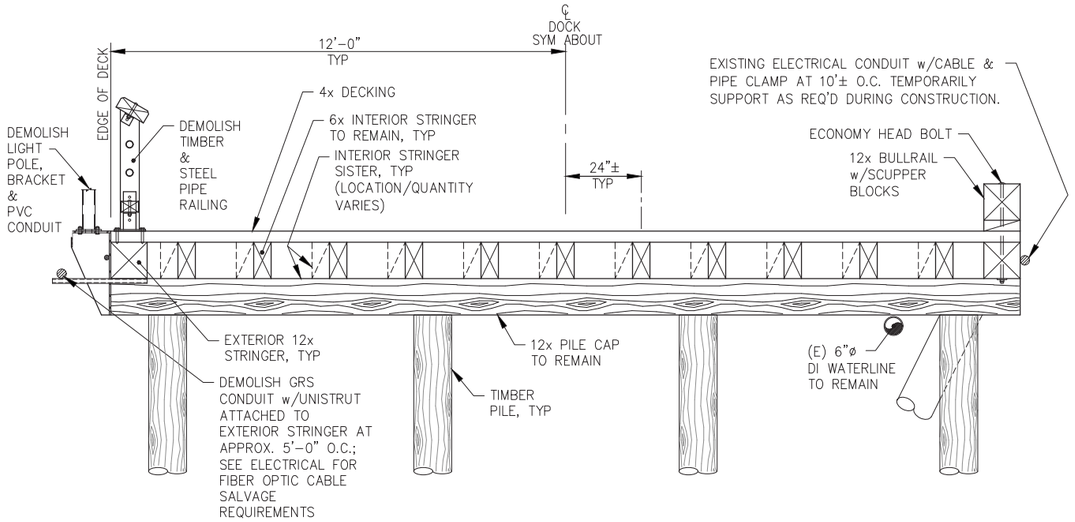

E G1.05 **SEAWALK SECTION**

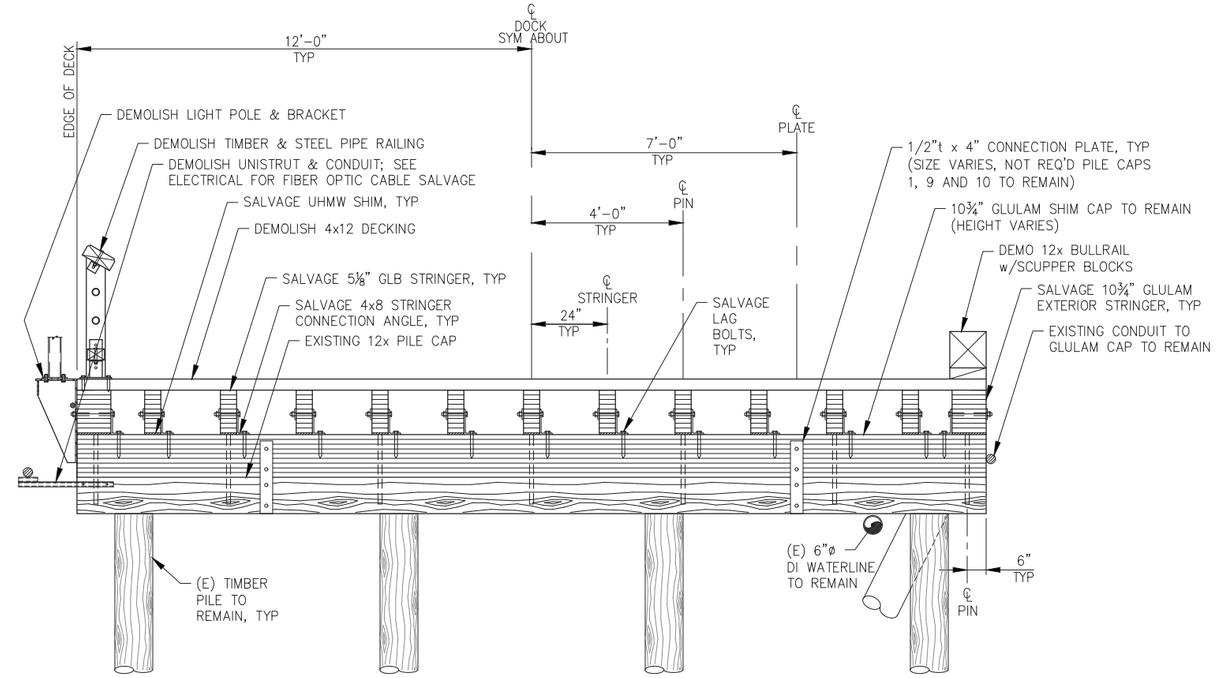

F G1.05 **SEAWALK SECTION**

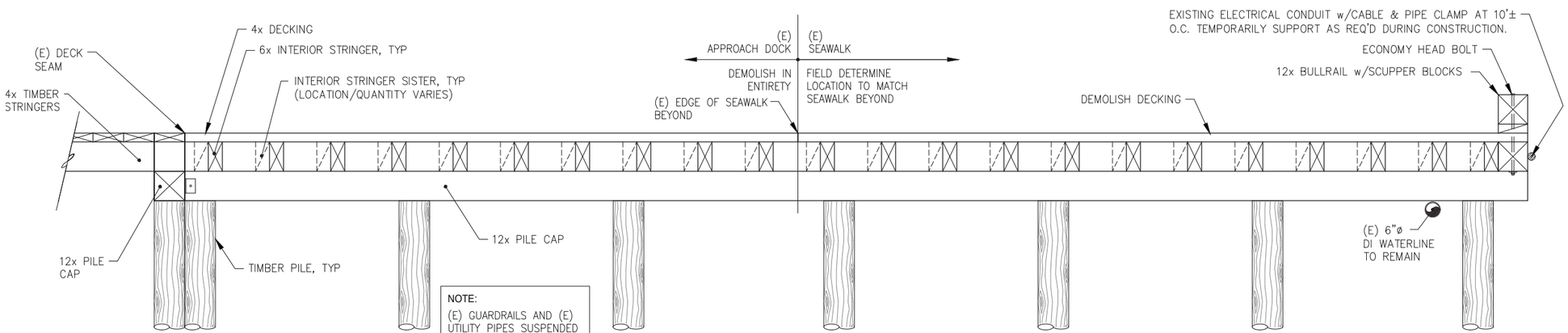

NOTE:
(E) GUARDRAILS AND (E) UTILITY PIPES SUSPENDED BELOW APPROACH DOCK DECK NOT SHOWN

G G1.05 **SEAWALK SECTION AT APPROACH DOCK**

NOTE:
(E) DOLPHIN NOT SHOWN

DOCK MODIFICATIONS SCOPE OF IMPROVEMENTS

- REMOVE EXISTING GUARDRAIL, BULLRAIL & SCUPPER BLOCKS, LIGHT POLES, BRACKETS & CONDUIT AS REQUIRED. SUPPLY NEW HARDWARE FOR REINSTALLATION AS REQUIRED.
- SALVAGE EXISTING RAMP STRINGERS
- REMOVE AND DISPOSE EXISTING DECKING AND NON-RAMP STRINGERS IN THEIR ENTIRETY INCLUDING DRIFT PINS CONNECTING STRINGERS TO PILE CAPS. FILL HOLES IN EXISTING PILE CAPS TO REMAIN w/ COAL TAR MASTIC AND PLUG HOLES w/ TREATED DOWELS.
- MINOR MODIFICATION OF EXISTING BULLRAIL MAY BE REQUIRED FOR REINSTALLATION AND TO MATCH MODIFIED SLOPE OF DOCK.
- INSTALL NEW GLULAM CAPS, DECKING, SHIMS, CONNECTION ANGLES AND SALVAGED STRINGERS. AS SHOWN.
- CONTRACTOR SHALL VERIFY ALL FINAL ELEMENTS NOT SPECIFICALLY SHOWN AS REQUIRED TO PERFORM THE WORK.

CITY & BOROUGH OF JUNEAU DOCKS & HARBORS

REVISIONS

REV.	DATE	DESCRIPTION	DWN.	CKD.	APP.

PND ENGINEERS, INC.
9360 Glacier Highway Ste 100
Juneau, Alaska 99801
Phone: 907-586-2093
Fax: 907-586-2099
www.pndengineers.com

DESIGN: MDS CHECKED: CRS
DRAWN: PJD APPROVED: CRS
SCALE: AS SHOWN

STATE OF ALASKA 49TH Charles R. Somerville CE-8845 REGISTERED PROFESSIONAL ENGINEER
DATE: 5/23/2019

DOWNTOWN WATERFRONT IMPROVEMENTS PHASE I
CBJ CONTRACT NO. DH19-014

SHEET TITLE: **DEMOLITION SECTIONS**

PND PROJECT NO.: 182045 C.A.N. NO.: AECC250

G1.08

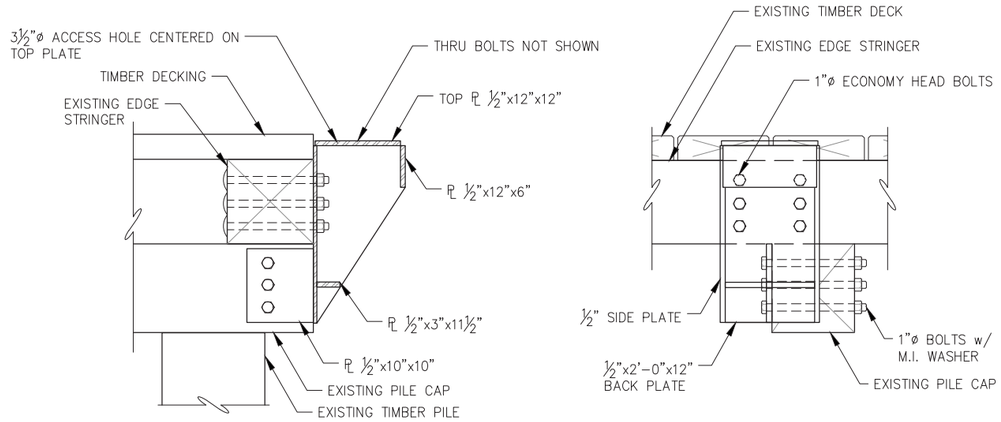

SECTION ELEVATION

A - EXISTING SEAWALK LIGHT POLE CONNECTION BRACKET

NOTE: GUARDRAIL & BULLRAIL NOT SHOWN FOR CLARITY.

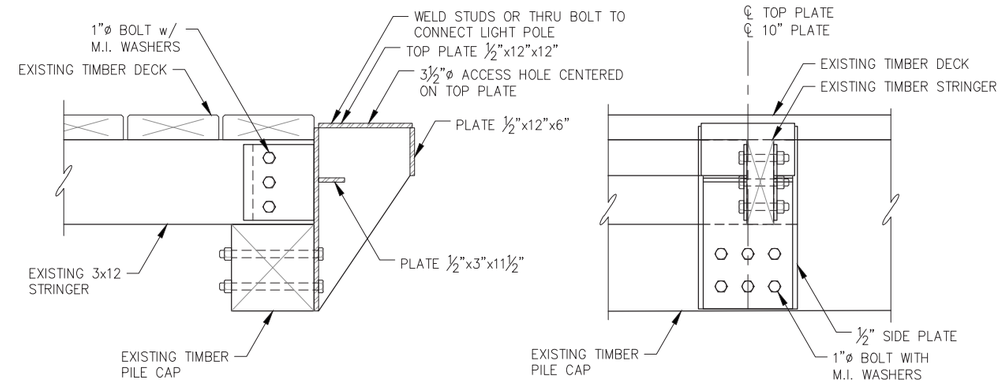

SECTION ELEVATION

B - TYPICAL APPROACH DOCK LIGHT POLE CONNECTION BRACKET

NOTE: GUARDRAIL NOT SHOWN FOR CLARITY

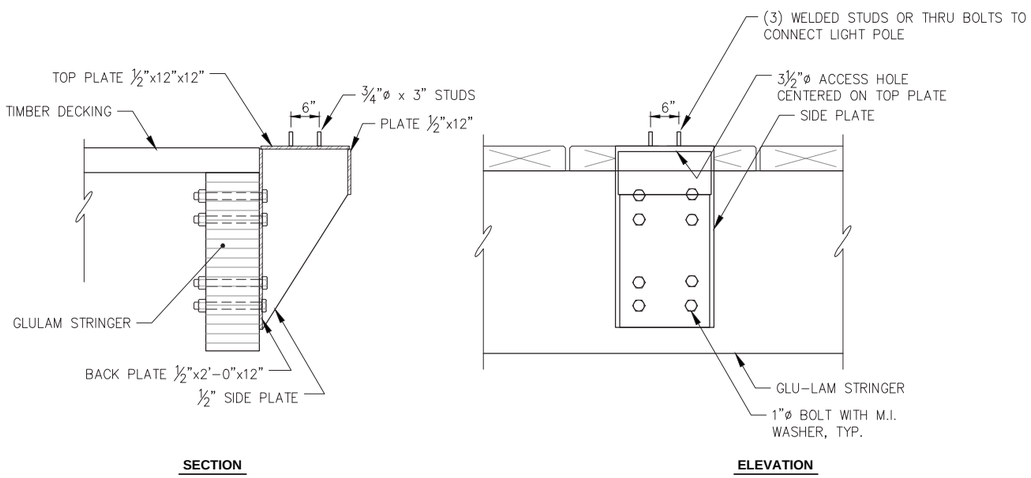

SECTION ELEVATION

C - EXISTING SEAWALK LIGHT POLE CONNECTION BRACKET

NOTE: GUARDRAIL & BULLRAIL NOT SHOWN FOR CLARITY.

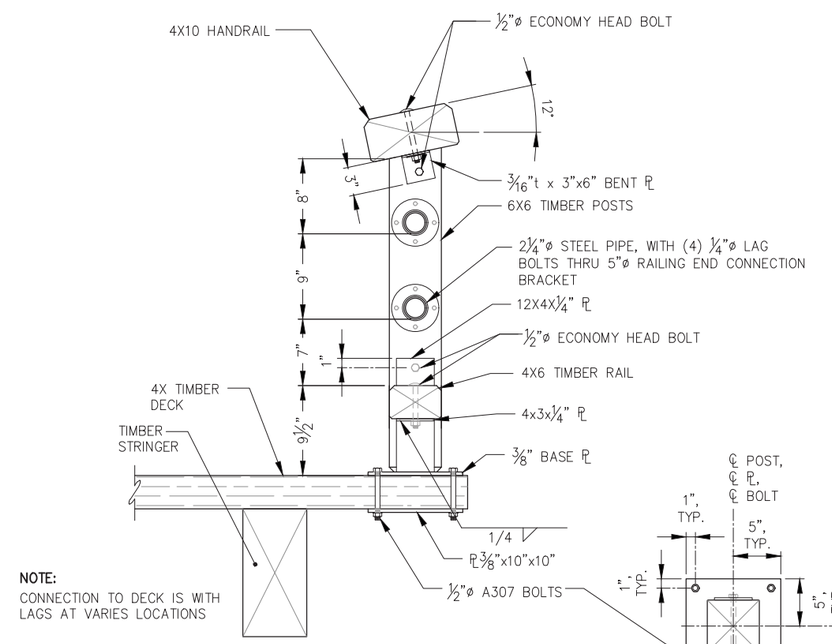

D - EXISTING GUARDRAIL DETAIL (SALVAGE)

E - BASE PLATE DETAIL

REVISIONS

REV.	DATE	DESCRIPTION	DWN.	CKD.	APP.

P | N | D ENGINEERS, INC.
9360 Glacier Highway Ste 100
Juneau, Alaska 99801
Phone: 907-586-2093
Fax: 907-586-2099
www.pndengineers.com

DESIGN: MDS CHECKED: CRS
DRAWN: KLL APPROVED: CRS
SCALE: AS SHOWN

STATE OF ALASKA 49TH Charles R. Somerville CE-8845 REGISTERED PROFESSIONAL ENGINEER
DATE: 5/23/2019

DOWNTOWN WATERFRONT IMPROVEMENTS PHASE I
CBJ CONTRACT NO. DH19-014

SHEET TITLE: **DEMOLITION DETAILS**

G1.09

PND PROJECT NO.: 182045 C.A.N. NO.: AECC250

(E) SEWER FORCE MAIN VAULT -ABANDONED IN PLACE-
(E) 16"DI WATER MAIN
(E) 20"DI PRESSURE SEWER -ABANDONED IN PLACE-
(E) 6" DI WATER AND SEWER SERVICES
34' WIDE DRIVEWAY CURB CUT
COMMUNICATION VAULT, SEE ELECTRICAL
(E) 12" AC SANITARY SEWER
SOUTH FRANKLIN ST
(E) 6" DI WATER AND SEWER SERVICES
(E) 6" DI WATER AND SEWER SERVICES
(E) 6"DIP TO LIBRARY/ PARKING GARAGE
(E) PROPERTY LINE, TYP.
REMNANT (E) SUBSURFACE CONC. FND
(E) SDMH
(E) BENCH, TYP.
REMNANT (E) SUBSURFACE CONC. FND
MARINE VIEW WAY
(E) UG FUEL TANK
(E) 6" HDPE FIRE CONNECTION
(E) 8" HDPE SEWER
(E) ACP SURFACING, TYP.
(E) WATER BLOWOUT
(E) 6" HDPE WATER
(E) REMOVABLE BOLLARDS
CBJ PARKING GARAGE/ LIBRARY
LUMINAIRE DESIGNATION, SEE SHT C1.03 FOR LAYOUT TABLE
CONTRACTOR STAGING AREA THROUGH APRIL 1, 2020 (INSIDE PROPERTY LINES)
CONCRETE PAVING, TYP.
PROPERTY LINE
SDMH
NEW FIRE HYDRANT
PLANTER (SOILS & PLANTS NIC) TYP.
CONCRETE PAVING
LIFT STATION
ELECTRICAL PANELS
CANOPY
CONC PLANTER (SOILS & PLANTS NIC)
ACCESS HATCH
(E) 24"ø CMP
UAMH
UAMH
OWS SDMH
PIER 49 BLDG
LUMINAIRE POLE, TYP.
TRENCH DRAIN
DECK DRAIN, TYP.
ACCESS RAMP
APPROX. FILL LIMITS, 27.0 CONTOUR
PILE-SUPPORTED CONCRETE RETAINING WALL BELOW DECK
(E) ACP
(E) CULVERT EXTENDED THROUGH WALL w/ 30"ø PIPE SLEEVE
BACKFILL WALL w/ CLASS A SHOT ROCK BORROW TO ELEV. 27.0'
TIMBER PLANTER (SOILS & PLANTS NIC) TYP.
PROPERTY LINE, TYP.
PIER 49 TIMBER DOCK
ADA RAMP
GUARDRAIL
APPROACH DOCK TIMBER RAMP (SEE S3.05)
RELOCATED APPROACH DOCK UTILITIES TO CRUISE SHIP BERTH SUSPENDED BELOW DECKING (SEE C1.15)
CONTRACTOR STAGING AREA AFTER APRIL 1, 2020
PHASE II SHELTER AND RESTROOMS BUILDING (NIC)
BLDG COL'S, TYP.
4' WIDE SWING GATE & WALKWAY
STRIPING, TYP.
VEHICLE GUARDRAIL
(E) TIMBER APPROACH DOCK
OVERDECK STAGE & STAIRWAY
RAISED SEAWALK STRINGERS & DECKING
(E) LUMINAIRE POLE BRACKET
GUARDRAIL
ADA RAMP
(E) SEAWALK WITH NEW DECKING
SEE ELECTRICAL FOR LIGHTING PLAN
(E) SEAWALK w/ NEW DECKING
RAISED SEAWALK DECKING & STRINGERS
PILE-SUPPORTED TIMBER DECK (SEE S3.01)
(E) ELEL J-BOX AND CONDUIT SERVICING AQUILEANS SCULPTURES, TYP.
PILE-SUPPORTED CONCRETE DECK (SEE S2.01)
VEHICLE GUARDRAIL w/ INFILL PANELS
AQUILEANS SCULPTURE ON DOLPHIN, TYP.
(E) DOLPHIN w/ FENDER, TYP.
SEE ELECTRICAL FOR LIGHTING PLAN

CITY & BOROUGH OF JUNEAU DOCKS & HARBORS

REVISIONS

REV.	DATE	DESCRIPTION	DWN.	CKD.	APP.

PND ENGINEERS, INC.
9360 Glacier Highway Ste 100
Juneau, Alaska 99801
Phone: 907-586-2093
Fax: 907-586-2099
www.pndengineers.com

DESIGN: MDS CHECKED: CRS
DRAWN: PJD APPROVED: CRS
SCALE: SCALE IN FEET 0 20 40 FT.

STATE OF ALASKA 49TH Charles R. Somerville CE-8845 REGISTERED PROFESSIONAL ENGINEER
DATE: 5/23/2019

DOWNTOWN WATERFRONT IMPROVEMENTS PHASE I

CBJ CONTRACT NO. DH19-014

SHEET TITLE: OVERALL SITE PLAN

G1.10

PND PROJECT NO.: 182045 C.A.N. NO.: AECC250

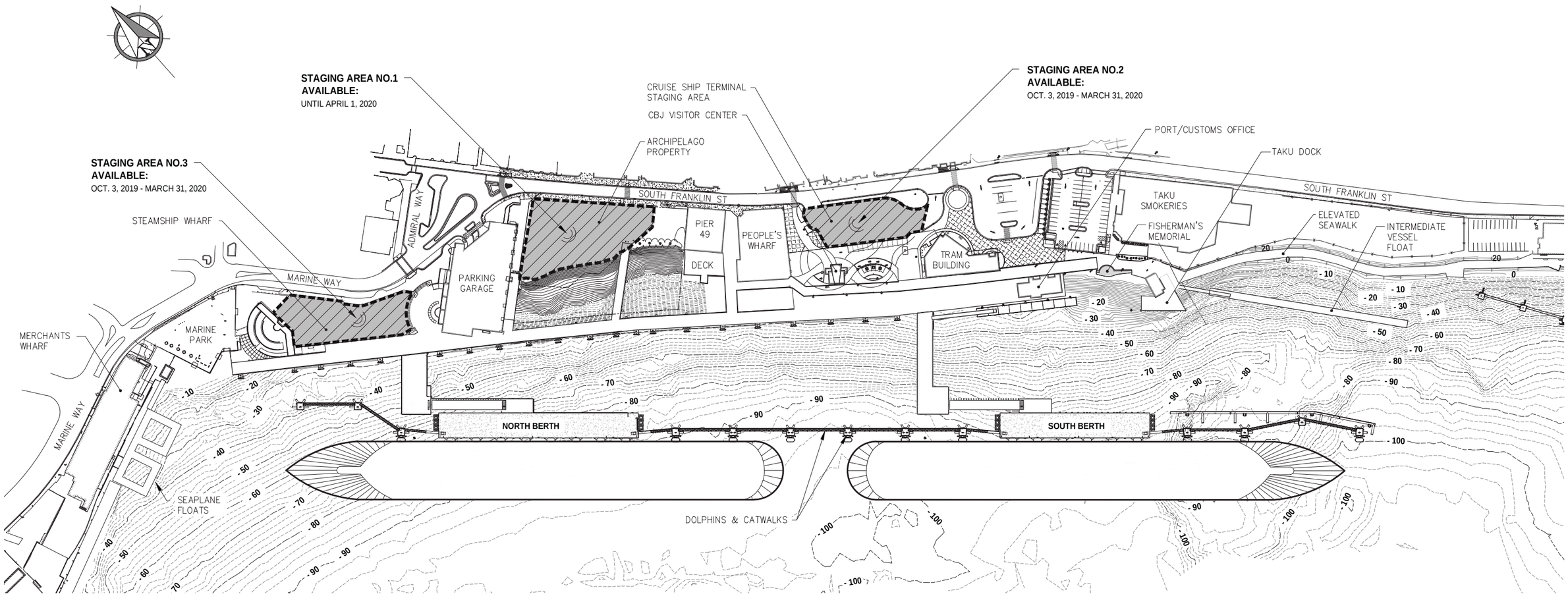

STAGING AREAS

NOTES:

1. CONTRACTOR SHALL INVENTORY EXISTING CONDITIONS WITH ENGINEER PRIOR TO USE OF ANY STAGING AREA. CONTRACTOR SHALL REPAIR ANY DAMAGES INCURRED AT STAGING AREAS DUE TO CONTRACTOR ACTIVITIES.
2. ADDITIONAL OFF-SITE STAGING AREA AVAILABLE AT "LITTLE ROCK DUMP". CONTACT PORT ENGINEER FOR DETAILS.
3. ALL OTHER STAGING AREAS SHALL BE PROVIDED BY THE CONTRACTOR.

REVISIONS

REV.	DATE	DESCRIPTION	DWN.	CKD.	APP.

PND ENGINEERS, INC.
9360 Glacier Highway Ste 100
Juneau, Alaska 99801
Phone: 907-586-2093
Fax: 907-586-2099
www.pndengineers.com

DESIGN: CRS CHECKED: CRS
DRAWN: PJD APPROVED: CRS
SCALE: SCALE IN FEET 0 100 200 FT.

STATE OF ALASKA 49TH Charles R. Somerville CE-8845 REGISTERED PROFESSIONAL ENGINEER
DATE: 5/23/2019

DOWNTOWN WATERFRONT IMPROVEMENTS PHASE I
CBJ CONTRACT NO. DH19-014

SHEET TITLE: STAGING AREAS

PND PROJECT NO.: 182045 C.A.N. NO.: AECC250

G1.11

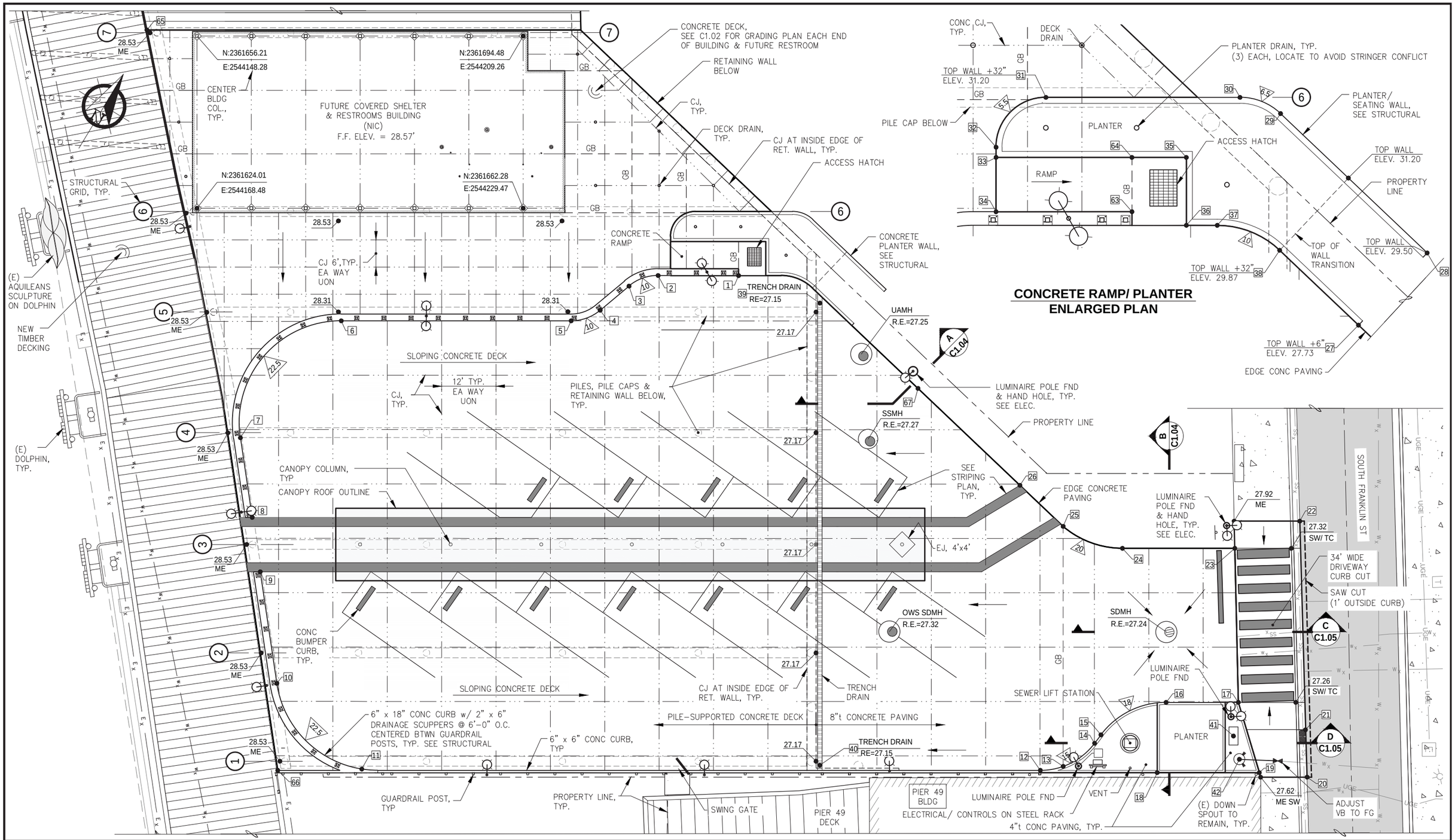

REVISIONS

REV.	DATE	DESCRIPTION	DWN.	CKD.	APP.

P | N | D ENGINEERS, INC.
9360 Glacier Highway Ste 100
Juneau, Alaska 99801
Phone: 907-586-2093
Fax: 907-586-2099
www.pndengineers.com

DESIGN: CRS CHECKED: CRS
DRAWN: PJD APPROVED: CRS
SCALE: SCALE IN FEET 0 10 20 FT.

STATE OF ALASKA 49TH Charles R. Somerville CE-8845 REGISTERED PROFESSIONAL ENGINEER
DATE: 5/23/2019

DOWNTOWN WATERFRONT IMPROVEMENTS PHASE I

CBJ CONTRACT NO. DH19-014

SHEET TITLE: **PARTIAL SITE PLAN**

PND PROJECT NO.: 182045 C.A.N. NO.: AECC250

C1.01

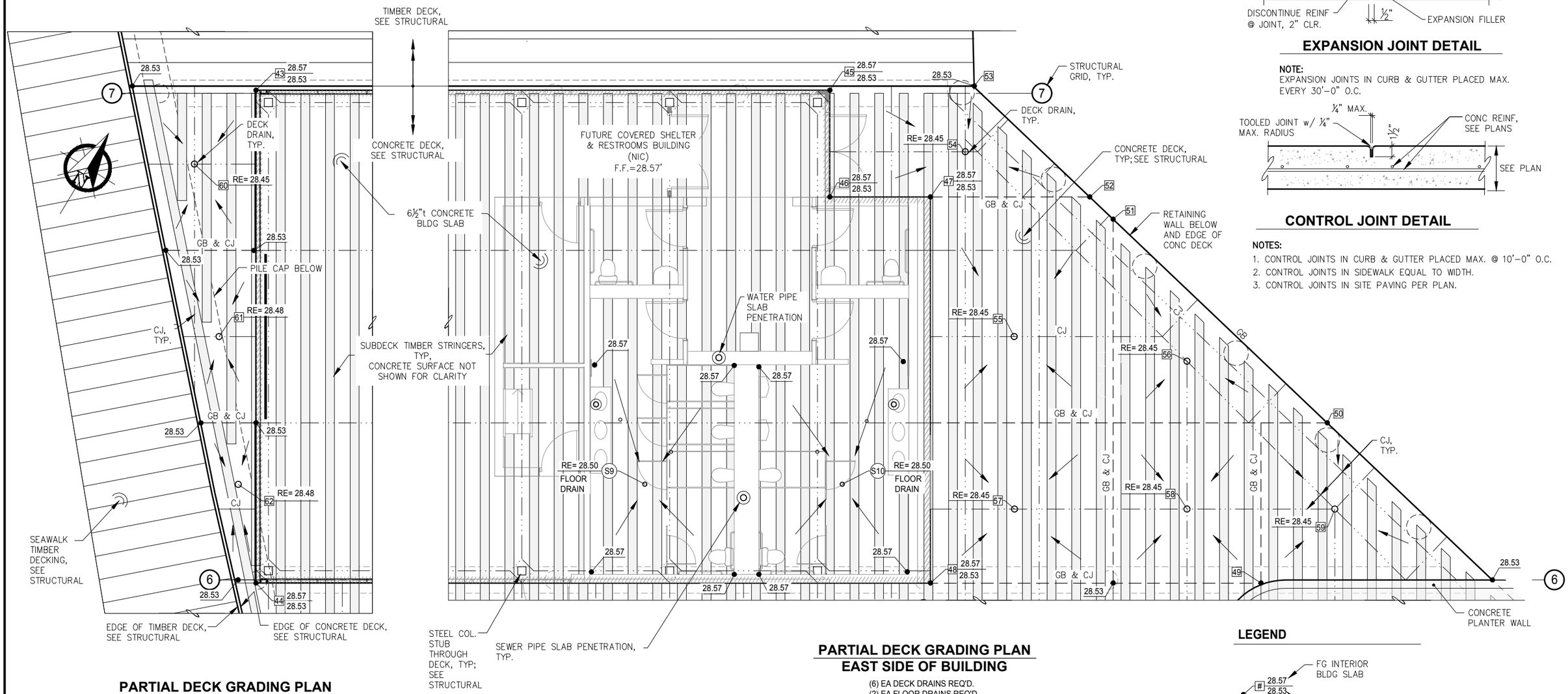

PARTIAL DECK GRADING PLAN
WEST SIDE OF BUILDING
(3) EA DECK DRAINS REQ'D.

PARTIAL DECK GRADING PLAN
EAST SIDE OF BUILDING
(6) EA DECK DRAINS REQ'D.
(2) EA FLOOR DRAINS REQ'D.

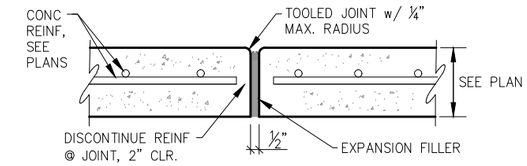

EXPANSION JOINT DETAIL

NOTE:
EXPANSION JOINTS IN CURB & GUTTER PLACED MAX. EVERY 30'-0" O.C.

CONTROL JOINT DETAIL

NOTES:
1. CONTROL JOINTS IN CURB & GUTTER PLACED MAX. @ 10'-0" O.C.
2. CONTROL JOINTS IN SIDEWALK EQUAL TO WIDTH.
3. CONTROL JOINTS IN SITE PAVING PER PLAN.

LEGEND

- # 28.57 / 28.53 — FG INTERIOR BLDG SLAB; FG EXTERIOR BLDG SLAB
- CONTROL JOINT (CJ)
- GRADE BREAK (GB)

NOTES:
1. FINISH GRADES SHOWN ARE TO THE TOP OF CONCRETE.
2. LOCATE DECK DRAINS BETWEEN TIMBER STRINGERS AS SHOWN; FIELD ADJUST PER ENGINEER.
3. SEE DECK DRAIN DETAIL w/ DOWNSPOUT ALIGNMENT TO AVOID CONFLICTS w/ BELOW DECK STRUCTURAL MEMBERS.
4. SEE ALSO WATER & SEWER PLAN FOR PIPE PENETRATION AND FLOOR DRAIN LOCATIONS.

CITY & BOROUGH OF JUNEAU — DOCKS & HARBORS

REVISIONS

REV.	DATE	DESCRIPTION	DWN.	CKD.	APP.

PND ENGINEERS, INC.
9360 Glacier Highway Ste 100
Juneau, Alaska 99801
Phone: 907-586-2093
Fax: 907-586-2099
www.pndengineers.com

DESIGN: CRS CHECKED: CRS
DRAWN: PJD APPROVED: CRS
SCALE: SCALE IN FEET 0 4 8 FT.

STATE OF ALASKA 49TH — Charles R. Somerville CE-8845 — REGISTERED PROFESSIONAL ENGINEER
DATE: 5/23/2019

DOWNTOWN WATERFRONT IMPROVEMENTS PHASE I
CBJ CONTRACT NO. DH19-014

SHEET TITLE: **PARTIAL CONCRETE DECK GRADING PLANS**

PND PROJECT NO.: 182045 C.A.N. NO.: AECC250

C1.02

POINT LAYOUT TABLE

POINT	NORTHING	EASTING	ELEV. (FEET)	DESCRIPTION
1	2361674.95	2544277.63	27.35	CDE/ END WALL
2	2361665.52	2544262.59	27.53	CDE/ PT
3	2361660.12	2544258.39	27.58	CDE/ PC, CURB
4	2361652.24	2544255.84	27.66	CDE/ PT, CURB
5	2361646.84	2544251.64	27.73	CDE/ PC, CURB
6	2361619.88	2544208.66	28.25	CDE/ PT, CURB
7	2361586.19	2544203.53	-	CDE/ PC, CURB
8	2361572.69	2544215.08	-	CDE/ END CURB
9	2361563.47	2544222.96	-	CDE/ END CURB
10	2361544.56	2544239.15	-	CDE/ PT, CURB
11	2361538.49	2544265.08	-	CDE/ PC, CURB
12	2361617.85	2544392.08	27.65	EC/ PC, CURB
13	2361621.27	2544395.89	27.70	EC/ GB, CURB
14	2361629.27	2544399.05	27.62	EC/ PT, CURB
15	2361631.60	2544399.25	27.60	EC/ PC, CURB
16	2361645.30	2544407.62	27.45	EC/ PT, CURB
17	2361653.78	2544421.13	27.45	EC/ SW JOINT
18	2361631.13	2544414.20	28.10	TOP CURB, INTERSECT
19	2361643.12	2544433.30	28.10	TOP CURB, INTERSECT
20	2361647.87	2544442.76	27.08/ME	END CURB, PVMNT JOINT
21	2361656.52	2544436.89	-	END CURB TRANSITION, EDGE INLET
22	2361694.86	2544411.35	27.22/ME	END CURB TRANSITION, ACP JOINT
23	2361682.16	2544402.39	27.51	EC/ SW JOINT
24	2361668.98	2544381.38	27.50	EC/ PT
25	2361666.13	2544367.73	27.70	EC/ PC
26	2361668.74	2544354.83	27.60	EC
27	2361678.90	2544304.66	27.23	EC/ END WALL
28	2361689.68	2544306.84	29.50	TOP/ END WALL
29	2361694.11	2544284.96	-	RBC/ PT, WALL

POINT LAYOUT TABLE (CONT.)

POINT	NORTHING	EASTING	ELEV. (FEET)	DESCRIPTION
30	2361693.25	2544280.22	-	RBC/ PT WALL
31	2361681.87	2544262.08	28.53	CDE/ PT, WALL
32	2361674.29	2544260.34	-	PC, WALL
33	2361673.33	2544260.94	28.47	CDE/ COR WALL
34	2361668.25	2544264.13	28.41	CDE/ CURB JOINT
35	2361684.49	2544278.73	27.37	LANDING
36	2361678.14	2544282.71	27.29	LANDING
37	2361679.95	2544285.60	27.26	CDE/ PC, WALL
38	2361681.28	2544292.90	27.20	CDE/ PT, WALL
39	2361679.34	2544296.05	27.15	END TD GRATE
40	2361592.94	2544350.26	27.15	END TD GRATE
41	2361646.91	2544424.16	-	CENTER COMMUNICATION VAULT
42	SEE WATER & SEWER UTILITY PLAN			FIRE HYDRANT
43	2361656.52	2544146.90	-	BUILDING COR
44	2361622.64	2544168.16	-	BUILDING COR
45	2361695.85	2544209.58	-	BUILDING COR
46	2361688.51	2544214.19	-	BUILDING COR
47	2361692.85	2544221.10	-	BUILDING COR
48	2361666.31	2544237.76	-	BUILDING COR
49	2361680.57	2544260.49	28.53	CDE/ GB INTERSECTION
50	2361694.44	2544258.14	28.53	CDE/ GB INTERSECTION
51	2361699.21	2544234.63	28.53	CDE/ GB
52	2361699.73	2544232.06	28.53	CDE/ GB
53	2361702.37	2544219.34	28.53	CDE/ TDE JOINT
54	2544221.56	2361697.47	-	DD
55	2361686.87	2544232.89	-	DD
56	2361692.63	2544245.84	-	DD
57	2361675.03	2544240.36	-	DD
58	2361682.47	2544252.22	-	DD
59	2361688.84	2544262.38	-	DD
60	2361648.78	2544145.85	-	DD
61	2361637.99	2544154.99	-	DD
62	2361628.65	2544162.68	-	DD
63	2361676.22	2544276.83	27.37	BOTTOM RAMP, GB LANDING
64	2361681.30	2544273.64	27.43	BOTTOM RAMP, GB LANDING
65	2361651.47	2544138.21	28.53	CDE, COR
66	2361528.40	2544249.51	28.53	CDE, COR
67	2361674.90	2544324.41	27.40	EC

LUMINAIRE POINT LAYOUT TABLE

POINT	NORTHING	EASTING	FND TYPE	FOUNDATION DESCRIPTION
1	2361677.53	2544321.50	TYPE 6	CONCRETE FND
2	2361671.89	2544223.99	TYPE 4	CONCRETE FND
3	2361630.77	2544223.99	TYPE 4	CONCRETE FND
4	2361783.75	2544046.93	TYPE 5	STEEL BRACKET
5	LUMINAIRE LOCATIONS 5,6,7,8,9 AND 10 TO BE FIELD DETERMINED PER DIRECTION OF ENGINEER		TYPE 3	STEEL BRACKET
6			TYPE 3	STEEL BRACKET
7			TYPE 3	STEEL BRACKET
8			TYPE 3	STEEL BRACKET
9			TYPE 3	STEEL BRACKET
10			TYPE 3	STEEL BRACKET
11	2361552.09	2544289.16	TYPE 1	STEEL BRACKET
12	2361577.58	2544329.83	TYPE 1	STEEL BRACKET
13	2361600.00	2544364.00	TYPE 1 SIM	STEEL BRACKET
14	2361623.12	2544398.75	TYPE 7	CONCRETE FND
15	2361650.19	2544421.39	TYPE 7	CONCRETE FND
16	2361685.45	2544398.23	TYPE 6	CONCRETE FND

NOTES :

1. SEE ELECTRICAL FOR LUMINAIRE DETAILS.
2. SEE SHT G1.10 FOR LUMINAIRE LOCATIONS.
3. SEE SHEET S1.07, S1.08, AND C1.06 FOR FOUNDATION DETAILS
4. TYPE 2 LIGHT POLE BASES SHALL BE USED AT ALL EXISTING LIGHT POLE FOUNDATIONS THAT HAVE NEW LIGHT POLES INSTALLED, SEE ELECTRICAL FOR LOCATIONS.

POINT TABLE ABBREVIATIONS:

- CDE CONCRETE DECK ELEVATION
- COR CORNER
- DD DECK DRAIN
- EC EDGE OF CONCRETE PAVING
- FD FLOOR DRAIN
- GB GRADE BREAK
- ME MATCH EXISTING
- PC POINT OF CURVATURE
- POC POINT ON CURVE
- PT POINT OF TANGENCY
- RE RIM ELEVATION
- RBC ROADWAY BASE COURSE
- SW SIDEWALK
- TD TRENCH DRAIN
- TDE TIMBER DECK ELEVATION

NOTES:

1. TABLE ELEVATIONS AT MATCH POINTS ARE SHOWN FOR REFERENCE PURPOSES ONLY, MATCHING EXISTING SURFACES SHALL TAKE PRECEDENCE, NOTIFY ENGINEER PRIOR TO GRADING OF ANY SUBSTANTIAL DISCREPANCIES (± 0.02').
2. ELEVATIONS PROVIDED THIS SHEET FOR POINTS ADJACENT TO CURB INLETS DO NOT REFLECT LOCAL CURB DEPRESSIONS AS REQUIRED IAW CBJ STD 310. SEE STORM DRAIN PLAN.

CITY & BOROUGH OF JUNEAU DOCKS & HARBORS

REVISIONS

REV.	DATE	DESCRIPTION	DWN.	CKD.	APP.

PND ENGINEERS, INC.
9360 Glacier Highway Ste 100
Juneau, Alaska 99801
Phone: 907-586-2093
Fax: 907-586-2099
www.pndengineers.com

DESIGN: CRS CHECKED: CRS
DRAWN: PJD APPROVED: CRS
SCALE: SCALE IN FEET 0 10 20 FT.

STATE OF ALASKA 49TH Charles R. Somerville CE-8845 REGISTERED PROFESSIONAL ENGINEER
DATE: 5/23/2019

DOWNTOWN WATERFRONT IMPROVEMENTS PHASE I
CBJ CONTRACT NO. DH19-014

SHEET TITLE: **POINT LAYOUT TABLES**

PND PROJECT NO.: 182045 C.A.N. NO.: AECC250

C1.03

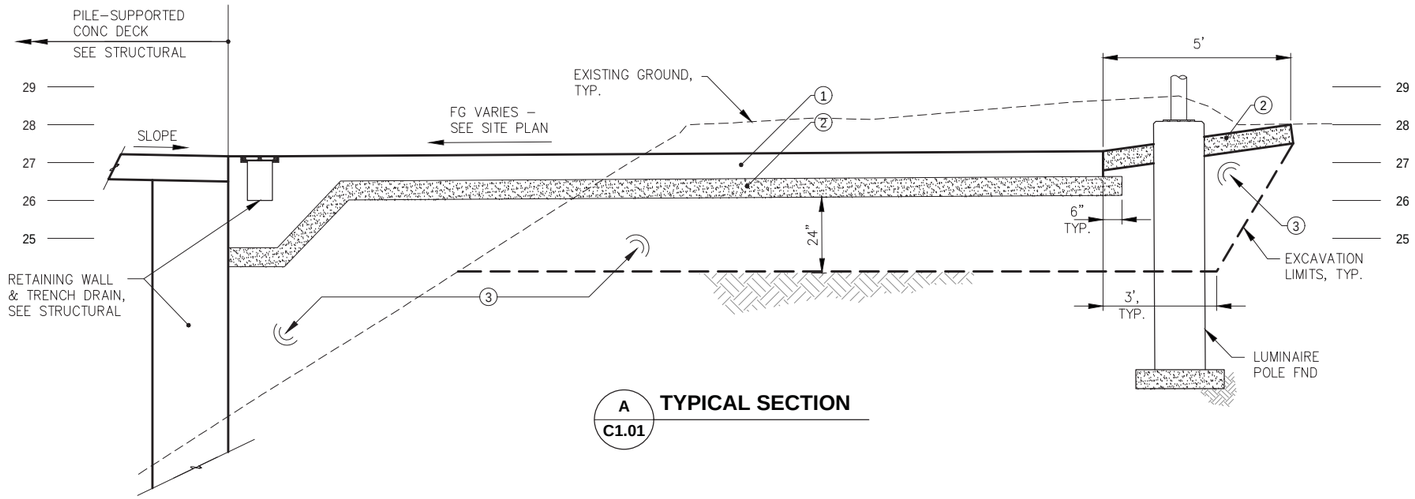

A
C1.01
TYPICAL SECTION

MATERIAL SCHEDULE	
SYMBOL	MATERIAL DESCRIPTION
1	8"t CONCRETE PAVING w/ NO.7 BARS @ 12" O.C. EACH WAY
2	6"t LAYER ROADWAY BASE COURSE, OR DEPTH AS SHOWN
3	CLASS A SHOT ROCK BORROW, THICKNESS AS SHOWN
4	4"t CONCRETE PAVING w/ NO.4 BARS @ 12" O.C. EACH WAY
5	VERTICAL CURB PER DTL; ELEVATION VARIES, SEE SITE PLAN
6	STANDARD CURB & GUTTER PER DOT/PF STD. DTL I.20.20
7	DEPRESSED CURB & GUTTER PER DOT/PF STD. DTL I.20.20

NOTES:
1. SEE SITE PLAN FOR PROJECT LIMITS
2. SEE POINT LAYOUT FOR FINAL GRADES
3. REMOVE AND DISPOSE OF UNSUITABLE EXCAVATED MATERIAL INCLUDING ORGANICS AND OTHER WASTE WITHIN FILL PRISM & AS DIRECTED BY ENGINEER.
4. SEE SITE PLAN FOR UTILITIES & STORM DRAINS.
5. PROTECT ALL CONCRETE EDGES FROM DAMAGE DUE TO CONSTRUCTION EQUIPMENT.

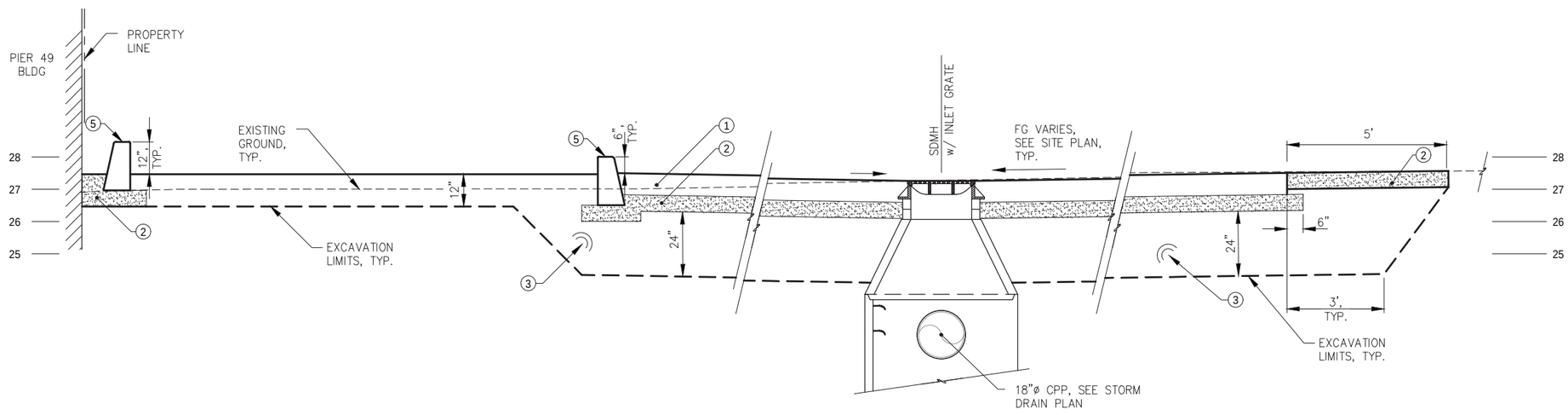

B
C1.01
TYPICAL SECTION

DIAL BEFORE YOU DIG!
586-1333

UNDERGROUND POWER, TELEPHONE, T.V., COMMUNICATIONS, WATER AND SEWER LINES ARE IN THE AREA. UTILITIES SHOWN HERE DO NOT SUBSTITUTE FOR FIELD LOCATES.

CITY & BOROUGH OF JUNEAU
DOCKS & HARBORS

REVISIONS

REV.	DATE	DESCRIPTION	DWN.	CKD.	APP.

PND ENGINEERS, INC.
9360 Glacier Highway Ste 100
Juneau, Alaska 99801
Phone: 907-586-2093
Fax: 907-586-2099
www.pndengineers.com

DESIGN: CRS CHECKED: CRS
DRAWN: PJD APPROVED: CRS
SCALE: NTS

STATE OF ALASKA 49TH
Charles R. Somerville
CE-8845
REGISTERED PROFESSIONAL ENGINEER
DATE: 5/23/2019

DOWNTOWN WATERFRONT IMPROVEMENTS
PHASE I
CBJ CONTRACT NO. DH19-014

SHEET TITLE:
TYPICAL SITE SECTIONS

PND PROJECT NO.: 182045 C.A.N. NO.: AECC250

C1.04

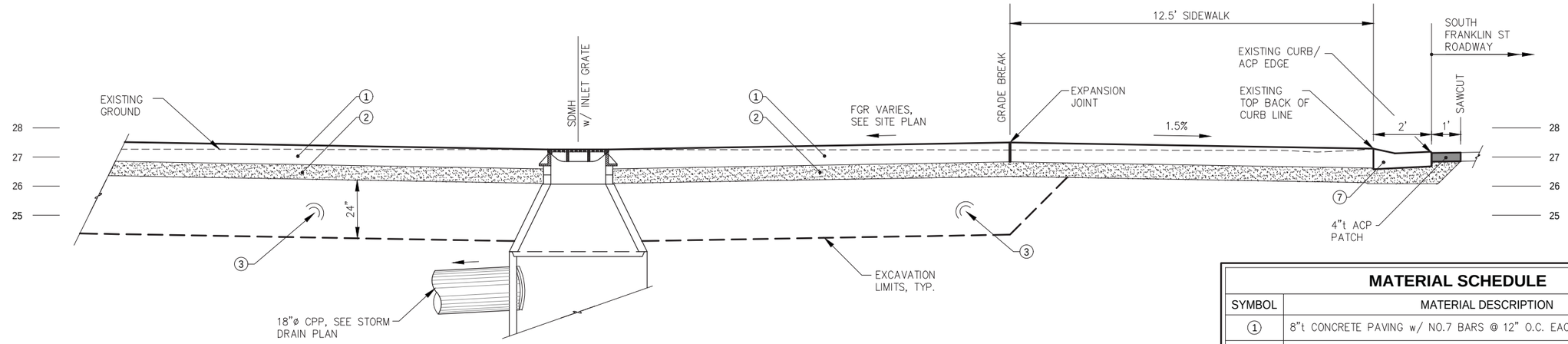

C
C1.01
TYPICAL SECTION

MATERIAL SCHEDULE

SYMBOL	MATERIAL DESCRIPTION
1	8"t CONCRETE PAVING w/ NO.7 BARS @ 12" O.C. EACH WAY
2	6"t LAYER ROADWAY BASE COURSE, OR DEPTH AS SHOWN
3	CLASS A SHOT ROCK BORROW, THICKNESS AS SHOWN
4	4"t CONCRETE PAVING w/ NO.4 BARS @ 12" O.C. EACH WAY
5	VERTICAL CURB PER DTL; ELEVATION VARIES, SEE SITE PLAN
6	STANDARD CURB & GUTTER PER DOT/PF STD. DTL I.20.20
7	DEPRESSED CURB & GUTTER PER DOT/PF STD. DTL I.20.20

DIAL BEFORE YOU DIG!
586-1333

UNDERGROUND POWER, TELEPHONE, T.V., COMMUNICATIONS, WATER AND SEWER LINES ARE IN THE AREA. UTILITIES SHOWN HERE DO NOT SUBSTITUTE FOR FIELD LOCATES.

NOTES:
1. SEE SITE PLAN FOR PROJECT LIMITS
2. SEE POINT LAYOUT FOR FINAL GRADES
3. REMOVE AND DISPOSE OF UNSUITABLE EXCAVATED MATERIAL INCLUDING ORGANICS AND OTHER WASTE WITHIN FILL PRISM & AS DIRECTED BY ENGINEER.
4. SEE SITE PLAN FOR UTILITIES & STORM DRAINS.
5. PROTECT ALL CONCRETE EDGES FROM DAMAGE DUE TO CONSTRUCTION EQUIPMENT.

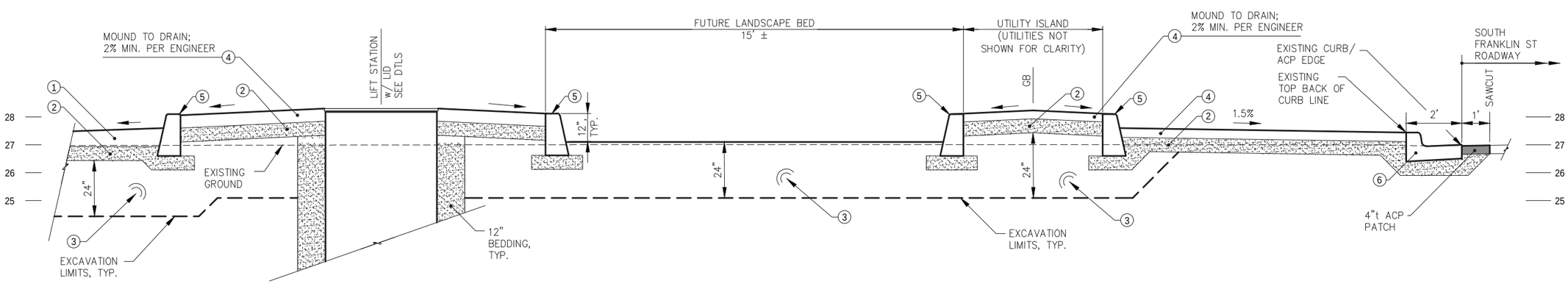

D
C1.01
TYPICAL SECTION

REVISIONS

REV.	DATE	DESCRIPTION	DWN.	CKD.	APP.

P N D ENGINEERS, INC.
9360 Glacier Highway Ste 100
Juneau, Alaska 99801
Phone: 907-586-2093
Fax: 907-586-2099
www.pndengineers.com

DESIGN: CRS CHECKED: CRS
DRAWN: PJD APPROVED: CRS
SCALE: AS SHOWN

STATE OF ALASKA 49TH Charles R. Somerville CE-8845 REGISTERED PROFESSIONAL ENGINEER
DATE: 5/23/2019

DOWNTOWN WATERFRONT IMPROVEMENTS PHASE I
CBJ CONTRACT NO. DH19-014

SHEET TITLE:
TYPICAL SITE SECTIONS

PND PROJECT NO.: 182045 C.A.N. NO.: AECC250

C1.05

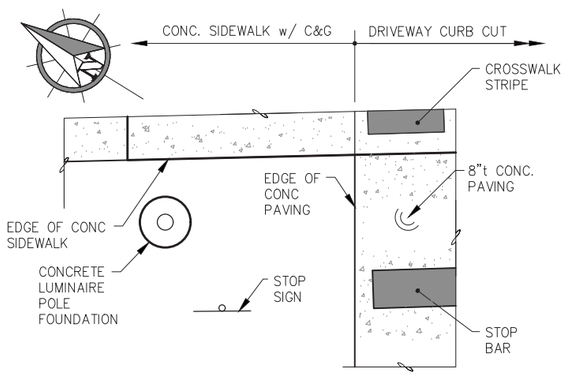

LUMINAIRE POLE PLAN AT ENTRANCE

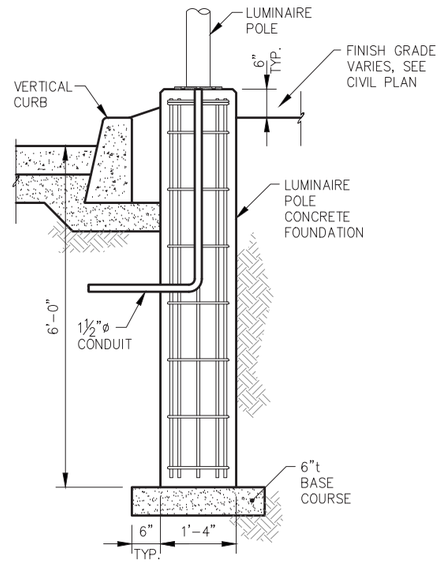

TYPICAL LUMINAIRE POLE PEDESTAL SECTION TYPE 6

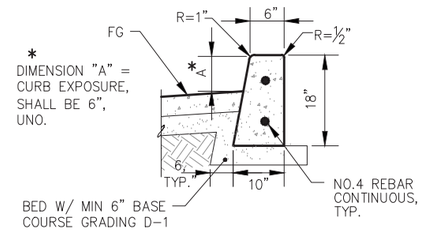

VERTICAL CURB DETAIL

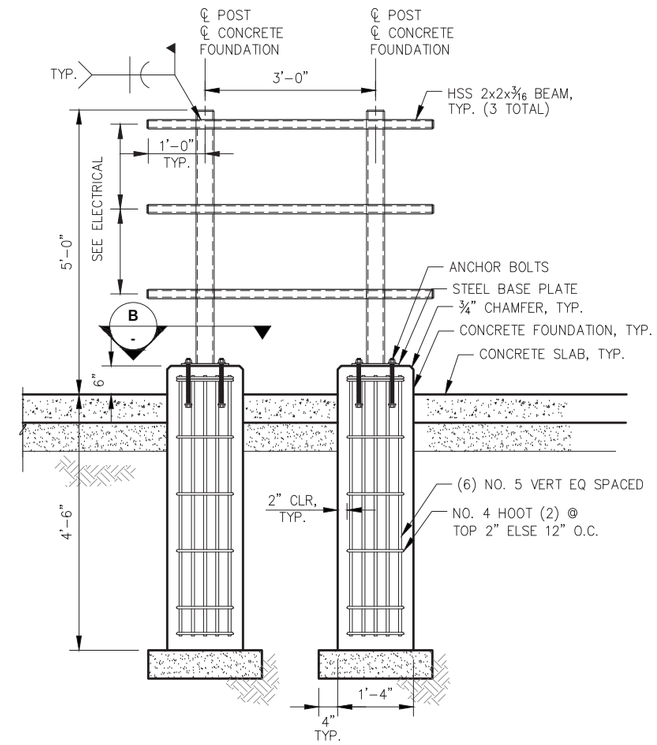

STEEL RACK FOUNDATION DETAILS

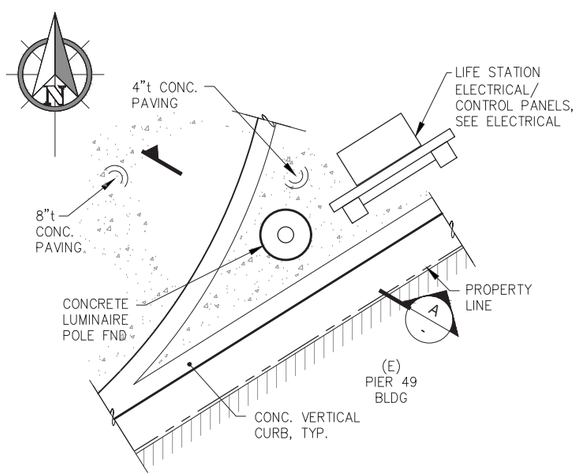

LUMINAIRE POLE PLAN AT PLANTER

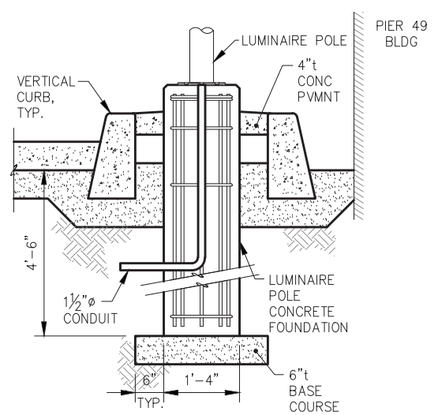

A LUMINAIRE PEDESTAL DETAIL TYPE 7

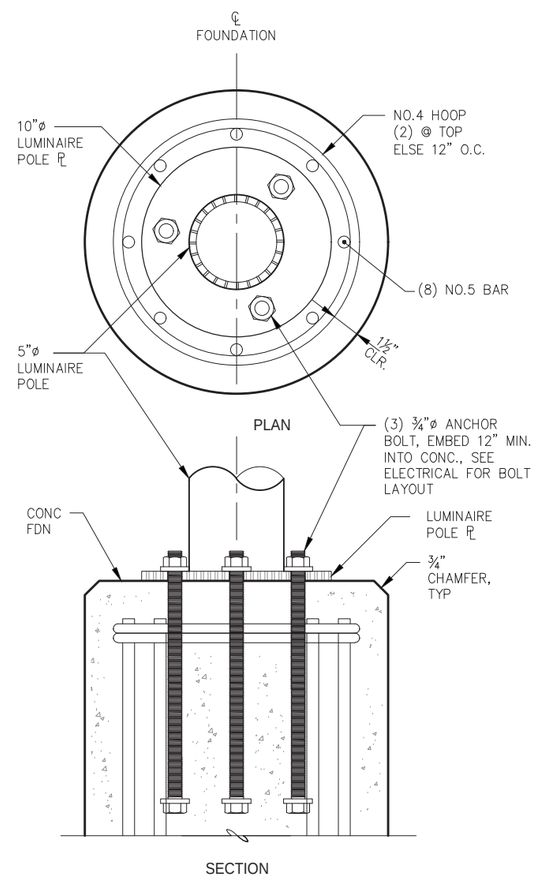

TYPICAL LUMINAIRE POLE FOUNDATION DETAILS

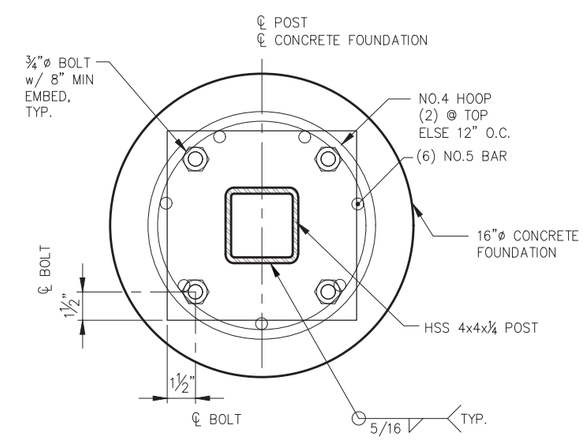

B - LUMINAIRE FOUNDATION DETAIL

NOTES:

1. SEE CIVIL SITE SECTIONS FOR DTLS NOT CALLED OUT.
2. SEE SITE GRADING PLAN FOR ELEVATIONS.
3. FOR LUMINAIRE PEDESTALS, HANDHOLDS AT EACH FOUNDATION BASE, SEE ELECTRICAL.
4. SEE LUMINAIRE FOUNDATION LAYOUT TABLE FOR COORDINATE LOCATIONS AND SIGNAGE AND STRIPING PLAN FOR SIGN COORDINATE LOCATION.

REVISIONS

REV.	DATE	DESCRIPTION	DWN.	CKD.	APP.

P N D ENGINEERS, INC.
9360 Glacier Highway Ste 100
Juneau, Alaska 99801
Phone: 907-586-2093
Fax: 907-586-2099
www.pndengineers.com

DESIGN: CRS CHECKED: CRS
DRAWN: PJD APPROVED: CRS
SCALE: AS SHOWN

STATE OF ALASKA 49TH Charles R. Somerville CE-8845 REGISTERED PROFESSIONAL ENGINEER
DATE: 5/23/2019

DOWNTOWN WATERFRONT IMPROVEMENTS PHASE I
CBJ CONTRACT NO. DH19-014

SHEET TITLE: **CIVIL DETAILS**

PND PROJECT NO.: 182045 C.A.N. NO.: AECC250

C1.06

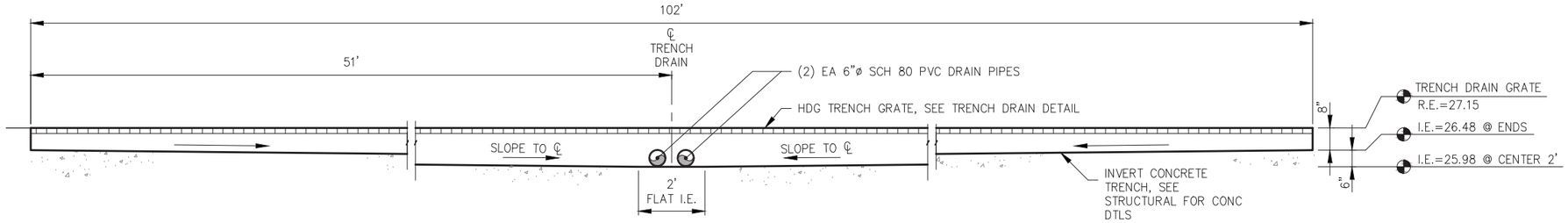

A **TRENCH DRAIN PROFILE**
NTS

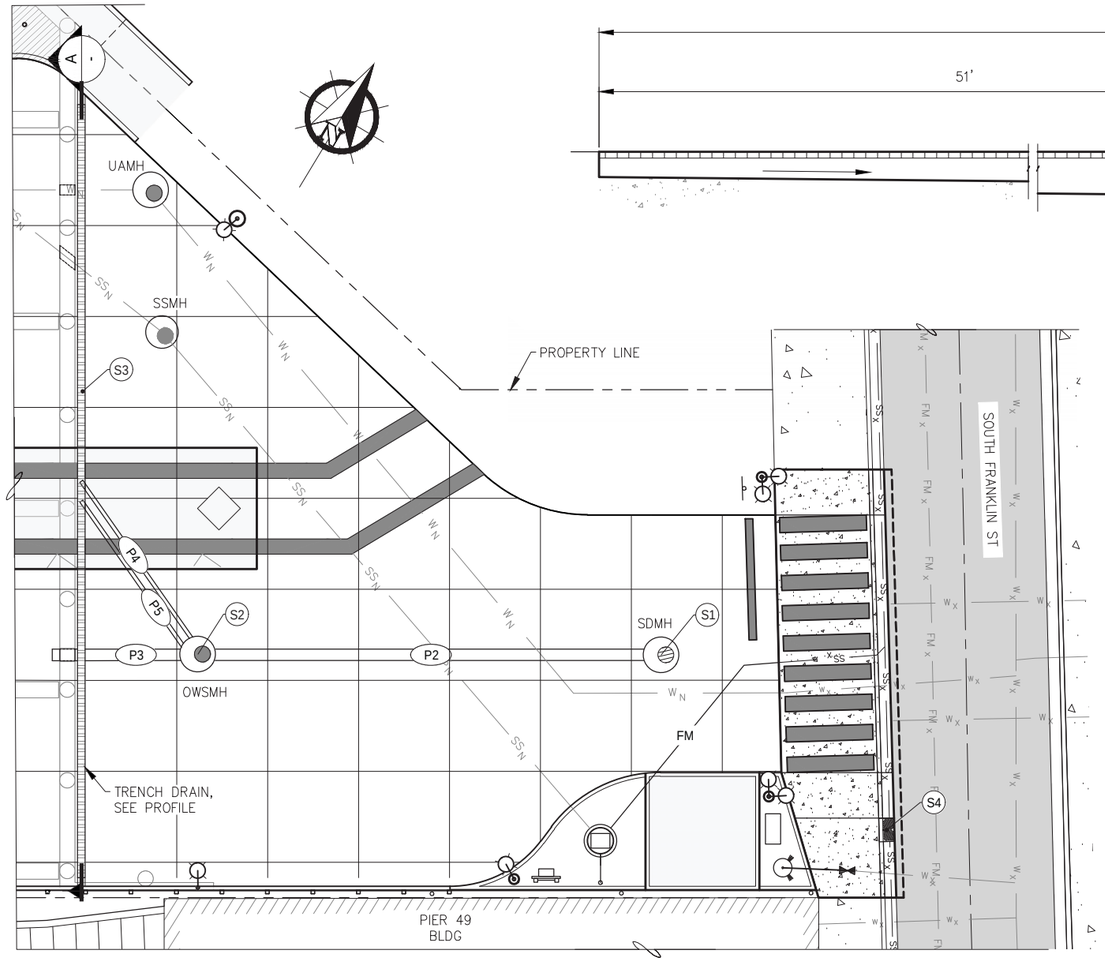

A - **STORM DRAIN PARTIAL PLAN**

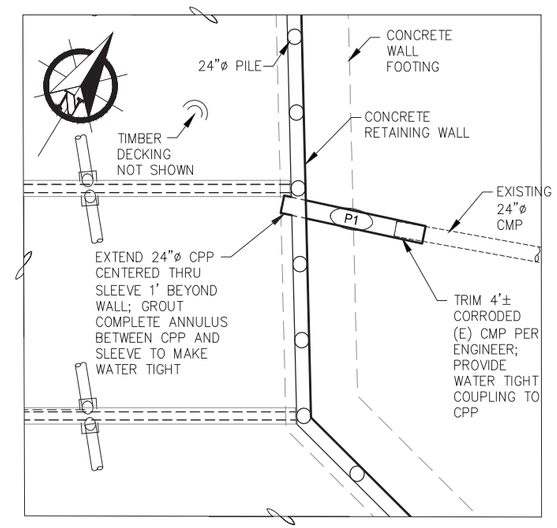

B - **STORM DRAIN PARTIAL PLAN**

STORM DRAIN STRUCTURES

STRUCTURE DESIGNATION	NORTHING	EASTING	R.E. (FT)	DESCRIPTION
S1	2361658.50	2544399.45	27.24	CENTER SDMH TYPE I w/ TOP GRATE
S2	2361626.09	2544347.60	27.32	CENTER OWS SDMH TYPE I w/ SOLID LID
S3	SEE SITE PLAN C1.01		27.15	102 LF TD
S4	2361654.76	2544436.92	26.80 (FIELD VERIFY)	CENTER IB & CIFG PER DOT&PF STD DTLS D-26.04 & D-23.01

CIFG = CURB INLET FRAME & GRATE
IB = TYPE A INLET BOX
OWS = OIL WATER SEPARATOR
RE = RIM ELEVATION
SDMH = STORM DRAIN MANHOLE
TD = TRENCH DRAIN

STORM DRAIN PIPING

PIPE DESIGNATION	NOMINAL Ø	LENGTH (LF)	FROM	I.E. (FT)	TO	IE
P1	24" CPP	20'	EXIST.	15.41	DAY LITE	14.80
P2	18" CPP	62'	S1	21.75	S2	20.50
P3	18" CPP	20'	S2	20.40	DAY LITE	20.00
P4	6" PVC	28'	TD	25.98	S2	24.68
P5	6" PVC	26'	TD	25.98	S2	24.68

CPP = CORRUGATED POLYETHYLENE PIPE, TYPE S

REVISIONS

REV.	DATE	DESCRIPTION	DWN.	CKD.	APP.

PND ENGINEERS, INC.
9360 Glacier Highway Ste 100
Juneau, Alaska 99801
Phone: 907-586-2093
Fax: 907-586-2099
www.pndengineers.com

DESIGN: CRS CHECKED: CRS
DRAWN: PJD APPROVED: CRS
SCALE: SCALE IN FEET 0 10 20 FT.

STATE OF ALASKA 49TH Charles R. Somerville CE-8845 REGISTERED PROFESSIONAL ENGINEER
DATE: 5/23/2019

DOWNTOWN WATERFRONT IMPROVEMENTS PHASE I
CBJ CONTRACT NO. DH19-014

SHEET TITLE: **STORM DRAIN PLAN**

PND PROJECT NO.: 182045 C.A.N. NO.: AECC250

C1.07

SEWER SERVICE LAYOUT POINTS

POINT	NORTHING	EASTING	I.E. (FT)	DESCRIPTION
S1	2361664.17	2544207.06	–	SEWER SERVICE SLAB PENETRATION, CONNECT TO S3
S2	2361677.02	2544227.54	–	SEWER SERVICE SLAB PENETRATION, CONNECT TO S3
S3	2361664.11	2544221.23	21.44	SEWER SERVICE SLAB PENETRATION w/ HDPE TEE DROP OUT
S4	2361669.25	2544229.42	21.34	ELBOW
S5	2361659.58	2544321.04	–	CENTER UTILITY ACCESS MANHOLE TYPE I w/ SOLID LID
S6	2361633.47	2544405.70	19.13	CENTER E-ONE SEWER LIFT STATION; GRAVITY SEWER I.E. IN
S7	2361663.16	2544409.42	19.56	2" HDPE ELBOW
S8	2361665.90	2544413.12	M.E.	FIELD LOCATE & CTE 6"ø DIP SEWER SERVICE IAW CBJ STD DTL 216
S9	2361660.78	2544213.87	–	FLOOR DRAIN, SEE DTL
S10	2361669.30	2544227.44	–	FLOOR DRAIN, SEE DTL

SEWER SERVICE LAYOUT POINTS (CON'T.)

POINT	NORTHING	EASTING	I.E. (FT)	DESCRIPTION
S11	2361664.16	2544209.40	–	3"x3" TEE
S12	2361664.14	2544214.28	–	3"x2" TEE
S13	2361670.44	2544224.33	–	3"x2" TEE
S14	2361674.69	2544226.40	–	3"x3" TEE

WATER SYSTEM LAYOUT POINTS

POINT	NORTHING	EASTING	I.E. (FT)	DESCRIPTION
W1	2361672.67	2544213.50	21.44	WATER SERVICE SLAB PENETRATION
W2	2361664.51	2544293.56	20.71	ELBOW
W3	2361674.68	2544309.79	20.54	CENTER UTILITY ACCESS MANHOLE TYPE I w/ SOLID LID
W4	2361648.05	2544392.35	19.15	ELBOW
W5	2361663.09	2544416.16	M.E.	FIELD LOCATE & CTE 6"ø DIP WATER SERVICE w/ SERIES 3800 RESTRAINED JOINT MEGA-COUPLING
W6	2361643.26	2544428.00	–	CENTER FIRE HYDRANT – IAW CBJ STD DTL 403

NOTES:

1. MAINTAIN 5 FEET MIN. BURY ON WATER LINE.
2. MAINTAIN 10 FEET LATERAL SEPARATION DISTANCE BETWEEN WATER & SEWER LINES.
3. MAINTAIN 18 INCH VERTICAL SEPARATION DISTANCE BETWEEN WATER, SEWER SERVICE AND STORM WATER LINES.
4. NOT ALL FITTINGS & APPURTENANCES ARE SHOWN; CONTRACTOR SHALL USE INDUSTRY STANDARD PRACTICES TO ACHIEVE CONNECTIONS NOT DETAILED IN ACCORDANCE WITH THE SPECIFICATIONS CONSISTENT WITH APPLICABLE LOCAL, STATE & FEDERAL REGULATIONS PER ENGINEER DIRECTION (INCIDENTAL).
5. 1 ¼"ø AND 2"ø WASTEWATER PIPE SHALL BE HYDROSTATIC PRESSURE TESTED TO FORCE MAIN REQUIREMENTS, SEE SPECIFICATIONS)
6. SUPPORT ALL BELOW DECK PIPING WITH HANGERS AND BRACES PER DETAILS.
7. ADJUSTMENTS TO FINAL LOCATIONS PER ENGINEER APPROVAL TO FIT FIELD CONDITIONS ENCOUNTERED.
8. WHERE WATER & SEWER LINES ARE PARALLEL, ADJUST WATERLINE INVERT ELEVATION TO MATCH SEWER.

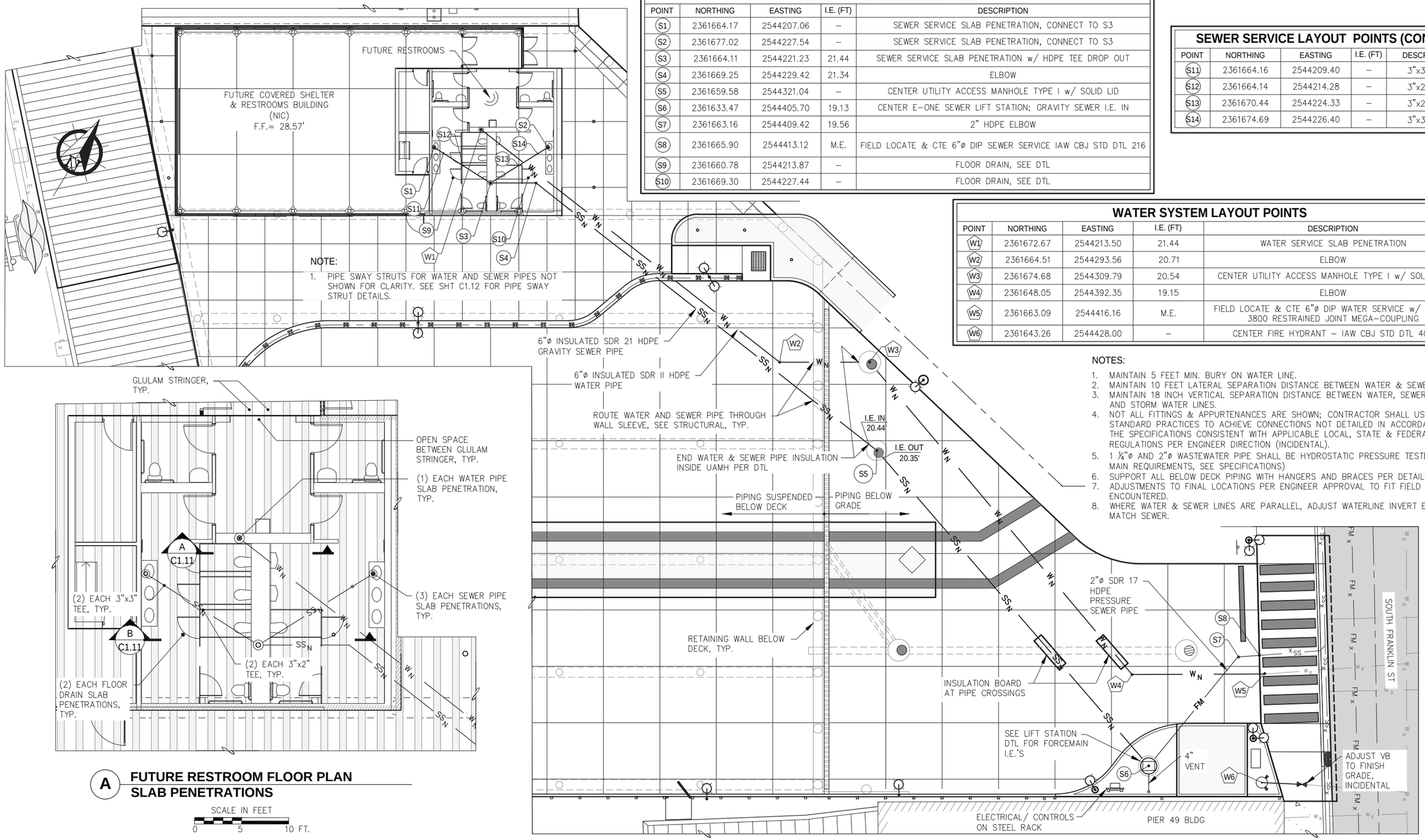

A FUTURE RESTROOM FLOOR PLAN SLAB PENETRATIONS

REVISIONS

REV.	DATE	DESCRIPTION	DWN.	CKD.	APP.

P N D ENGINEERS, INC.
9360 Glacier Highway Ste 100
Juneau, Alaska 99801
Phone: 907-586-2093
Fax: 907-586-2099
www.pndengineers.com

DESIGN: BCL CHECKED: CRS
DRAWN: PJD APPROVED: CRS
SCALE: SCALE IN FEET 0 10 20 FT.

STATE OF ALASKA 49TH Charles R. Somerville CE-8845 REGISTERED PROFESSIONAL ENGINEER
DATE: 5/23/2019

DOWNTOWN WATERFRONT IMPROVEMENTS PHASE I
CBJ CONTRACT NO. DH19-014

SHEET TITLE:
WATER & SEWER UTILITY PLAN

PND PROJECT NO.: 182045 C.A.N. NO.: AECC250

C1.08

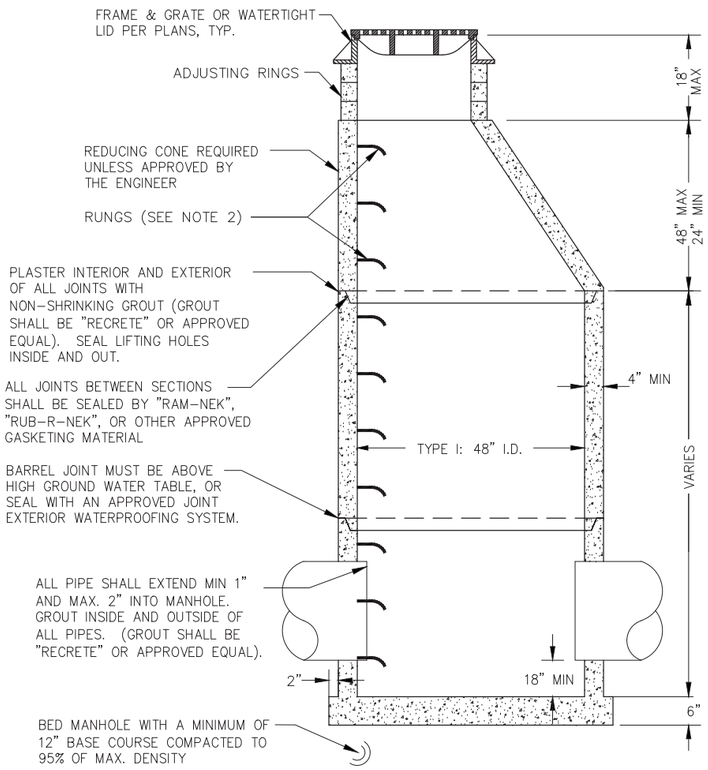

1 TYPE I STORM DRAIN MANHOLE

NOTES:

1. RUNGS PLACED 12" O.C. ON UNOBSTRUCTED SIDE OF MANHOLE. LAST RUNG 18" MAX FROM BOTTOM OF MANHOLE, AND TOP RUNG 6" MAX FROM TOP OF CONE. IF UNOBSTRUCTED SIDE NOT AVAILABLE, LAST RUNG PLACED 6" OVER SMALLEST PIPE.
2. REFER TO A.S.T.M. C-478 FOR DESIGN REQUIREMENTS AND C-478-69 FOR MINIMUM STEEL FOR BARREL. BARREL SHALL BE IMBEDDED IN BASE SO THAT FIRST BARREL SECTION IS CONNECTED WITH BASE.
3. BLOCKOUTS MUST BE FORMED.
4. CONFORM ALL OTHER ASPECTS TO CBJ STD DTL 303.

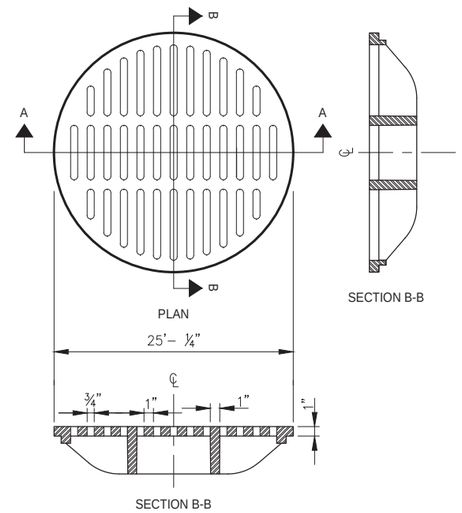

2 TOP INTAKE GRATE

SLOTTED COVER IFCO 705-G, OR EQUAL

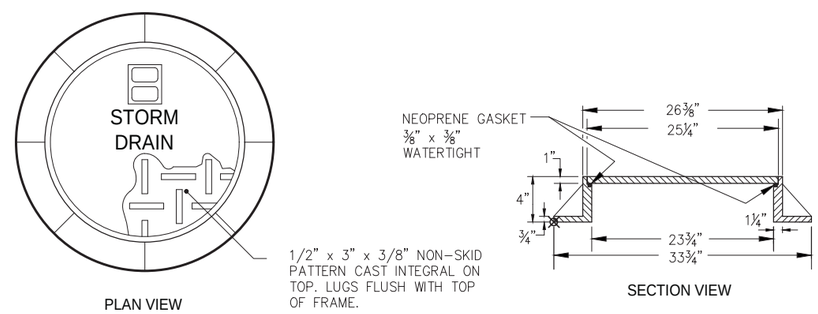

3 STORM DRAIN MANHOLE WATERTIGHT SOLID LID AND FRAME

NOTES:

1. FRAME MUST BE MACHINED TO FIT WATERTIGHT NEOPRENE GASKET.
2. COVER SHALL BE WATER TIGHT WITH NO HOLES, SHALL HAVE THE WORD "STORM" CAST IN AND SHALL BE PROVIDED WITH AN INTEGRAL POCKET LIFT HANDLE.
3. FRAME AND COVER SHALL BE DUCTILE IRON AND SHALL CONFORM TO AASHTO M-306.
4. CONFORM ALL OTHER ASPECTS TO CBJ STD DTL 206A.

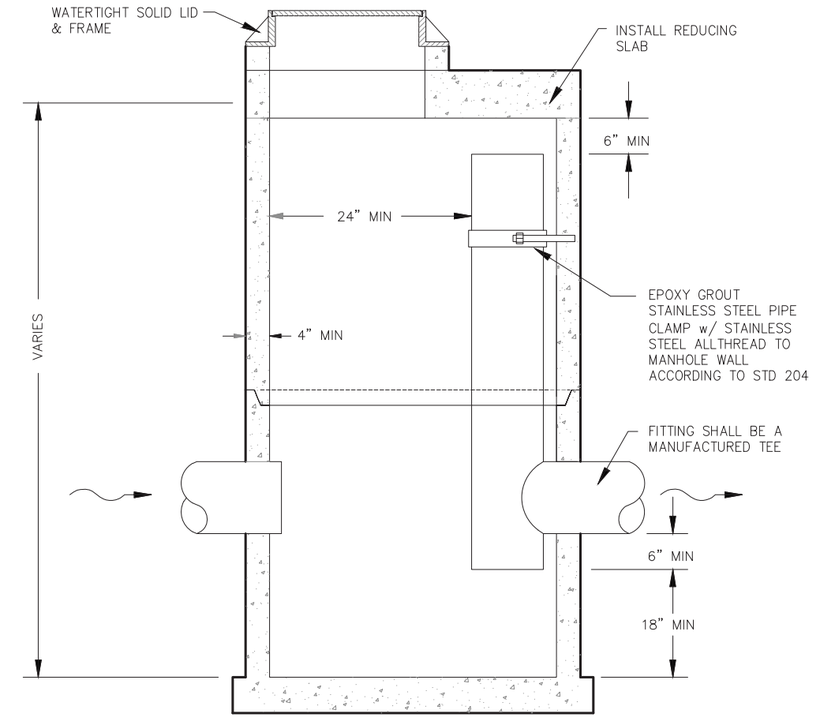

4 OIL-WATER SEPARATOR STORM DRAIN MANHOLE

NOTES:

1. ACCESS TO THE MANHOLE SHALL BE CONSTRUCTED TO ALLOW FOR MAINTENANCE AND PUMPING.
2. MANHOLE SHALL CONFORM IN ALL OTHER ASPECTS TO A TYPE I STORM DRAIN MANHOLE AS SHOWN IN CBJ STD DTL 303.
3. INLET, OUTLET, AND RISER PIPE SHALL BE THE SAME DIMENSION.

CITY & BOROUGH OF JUNEAU — DOCKS & HARBORS

REVISIONS

REV.	DATE	DESCRIPTION	DWN.	CKD.	APP.

PND ENGINEERS, INC.
9360 Glacier Highway Ste 100
Juneau, Alaska 99801
Phone: 907-586-2093
Fax: 907-586-2099
www.pndengineers.com

DESIGN: BCL CHECKED: CRS
DRAWN: PJD APPROVED: CRS
SCALE: SCALE IN FEET 0 10 20 FT.

STATE OF ALASKA 49TH Charles R. Somerville CE-8845 REGISTERED PROFESSIONAL ENGINEER
DATE: 5/23/2019

DOWNTOWN WATERFRONT IMPROVEMENTS PHASE I
CBJ CONTRACT NO. DH19-014

SHEET TITLE: **STORM DRAIN DETAILS**

PND PROJECT NO.: 182045 C.A.N. NO.: AECC250

C1.09

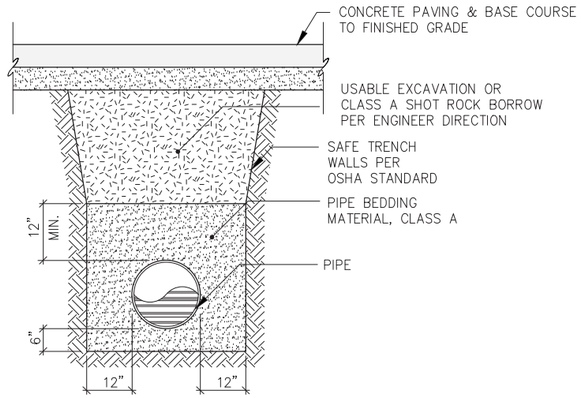

TYPICAL PIPE BEDDING SECTION

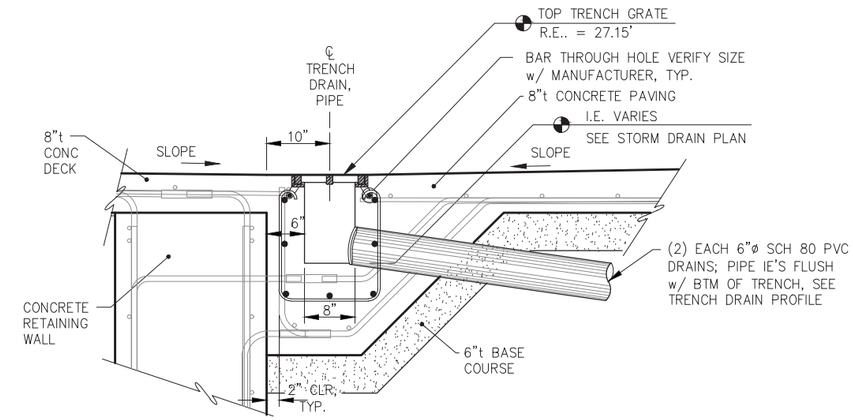

TRENCH DRAIN DETAIL

NOTES:

1. TRENCH GRATE SHALL BE EJIW V-7382-20 ADA BOLTED ASSEMBLY, OR APPROVED EQUAL, HOT-DIPPED GALVANIZED.
2. CAST 6" SCH. 80 PVC DRAIN PIPE INTO CONCRETE.

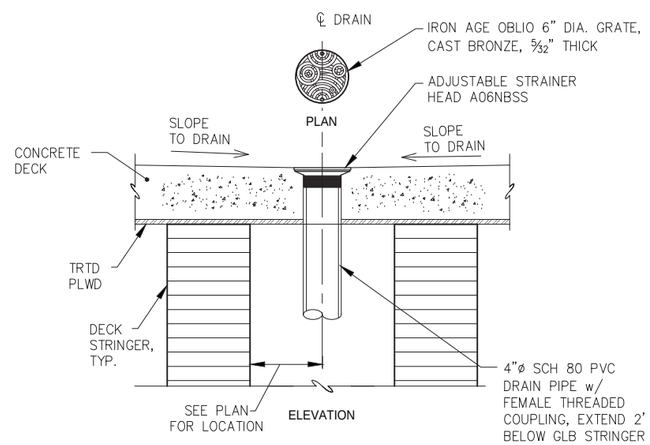

6 INCH DECK DRAIN DETAIL

NOTES:

1. OFFSET & EXTEND PVC DRAIN LINE w/ FABRICATED ELBOWS AS REQUIRED TO AVOID DRAINING ONTO STRUCTURE BELOW.
2. PLANTER DRAINS SIMILAR.

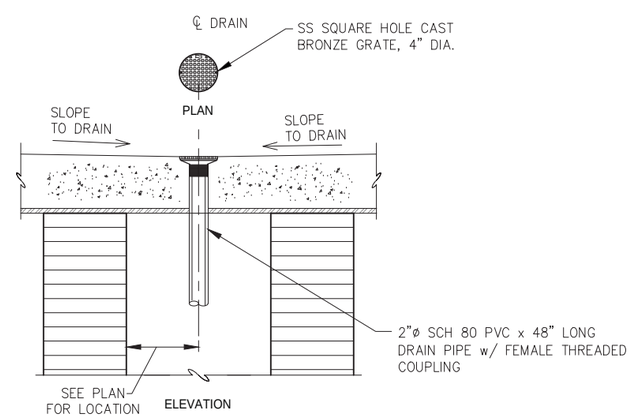

4 INCH FLOOR DRAIN DETAIL

NOTE:

DETAILS NOT SHOWN SIMILAR TO 6" DECK DRAIN.

REVISIONS

REV.	DATE	DESCRIPTION	DWN.	CKD.	APP.

P | N | D ENGINEERS, INC.
9360 Glacier Highway Ste 100
Juneau, Alaska 99801
Phone: 907-586-2093
Fax: 907-586-2099
www.pndengineers.com

DESIGN: CRS CHECKED: CRS
DRAWN: PJD APPROVED: CRS
SCALE: SCALE IN FEET 0 10 20 FT.

STATE OF ALASKA 49TH Charles R. Somerville CE-8845 REGISTERED PROFESSIONAL ENGINEER
DATE: 5/23/2019

DOWNTOWN WATERFRONT IMPROVEMENTS PHASE I
CBJ CONTRACT NO. DH19-014

SHEET TITLE: **STORM DRAIN DETAILS**

PND PROJECT NO.: 182045 C.A.N. NO.: AECC250

C1.10

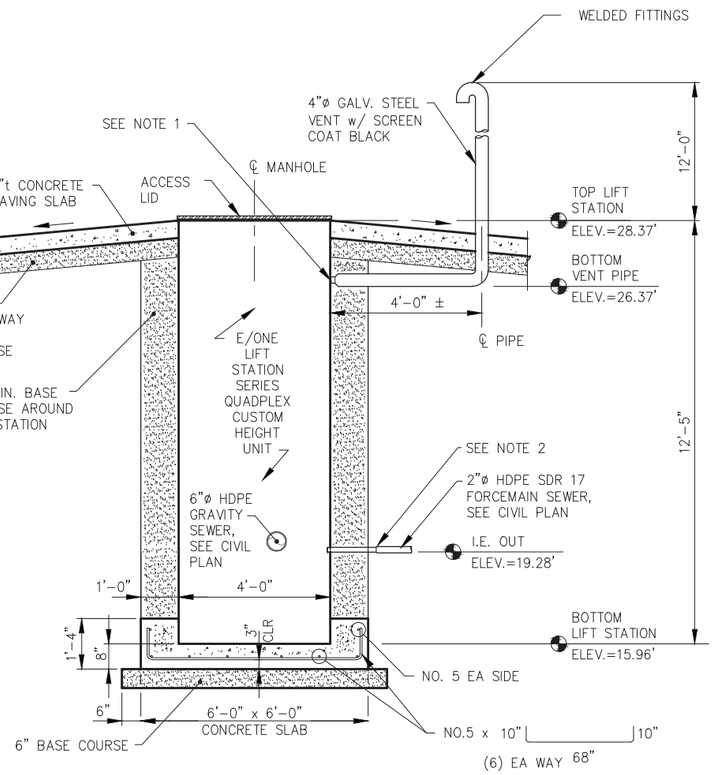

1 SEWER LIFT STATION DETAIL

NOTES:

1. ADAPT 4-INCH VENT PIPE TO 2-INCH GROMET AT WET WELL; SUBMIT CONNECTION DETAIL FOR ENGINEER APPROVAL.
2. ADAPT 1½"ø FEMALE NPT TO 2"ø HDPE PRESSURE DISCHARGE LINE OUTSIDE WET WELL; PROVIDE SUBMITTAL FOR ENGINEER APPROVAL.
3. SEE SPEC SECTION 09900 FOR VENT COATING REQUIREMENTS.

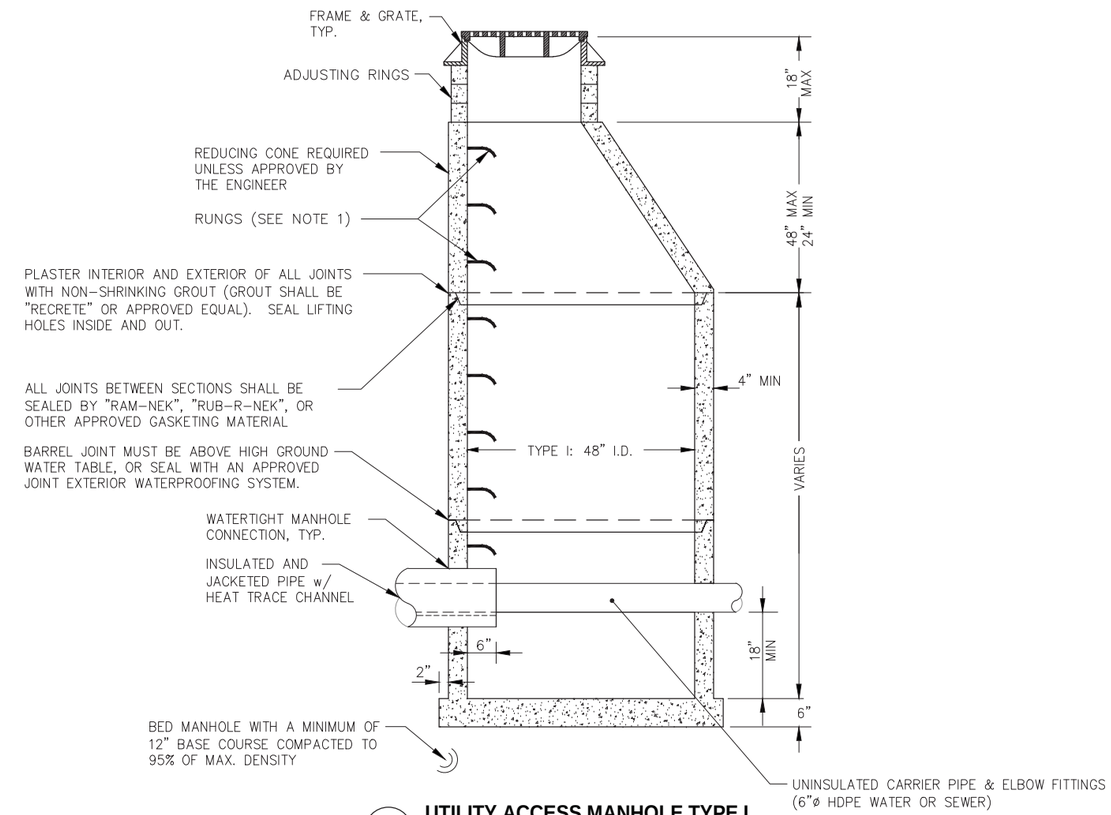

2 UTILITY ACCESS MANHOLE TYPE I

NOTES:

1. RUNGS PLACED 12" O.C. ON UNOBSTRUCTED SIDE OF MANHOLE. LAST RUNG 18" MAX FROM BOTTOM OF MANHOLE, AND TOP RUNG 6" MAX FROM TOP OF CONE. IF UNOBSTRUCTED SIDE NOT AVAILABLE, LAST RUNG PLACED 6" OVER SMALLEST PIPE.
2. REFER TO A.S.T.M. C-478 FOR DESIGN REQUIREMENTS AND C-478-69 FOR MINIMUM STEEL FOR BARREL. BARREL SHALL BE IMBEDDED IN BASE SO THAT FIRST BARREL SECTION IS CONNECTED WITH BASE.
3. BLOCKOUTS MUST BE FORMED.
4. WATERTIGHT CONNECTION DETAIL PER CBJ STD DTL 209.
5. HEAT TRACE INSULATION SHALL BE TERMINATED AND SEALED WATERTIGHT PRIOR TO THE PIPE FITTINGS WITHIN THE MANHOLE; PROVIDE OPEN ACCESS TO HEAT TRACE CHANNEL.

CITY & BOROUGH OF JUNEAU — DOCKS & HARBORS

REVISIONS

REV.	DATE	DESCRIPTION	DWN.	CKD.	APP.

P | N | D ENGINEERS, INC.
9360 Glacier Highway Ste 100
Juneau, Alaska 99801
Phone: 907-586-2093
Fax: 907-586-2099
www.pndengineers.com

DESIGN: BCL CHECKED: CRS
DRAWN: PJD APPROVED: CRS
SCALE: SCALE IN FEET 0 10 20 FT.

STATE OF ALASKA 49TH Charles R. Somerville CE-8845 REGISTERED PROFESSIONAL ENGINEER
DATE: 5/23/2019

DOWNTOWN WATERFRONT IMPROVEMENTS PHASE I
CBJ CONTRACT NO. DH19-014

SHEET TITLE: **WATER & SEWER DETAILS**

PND PROJECT NO.: 182045 C.A.N. NO.: AECC250

C1.11

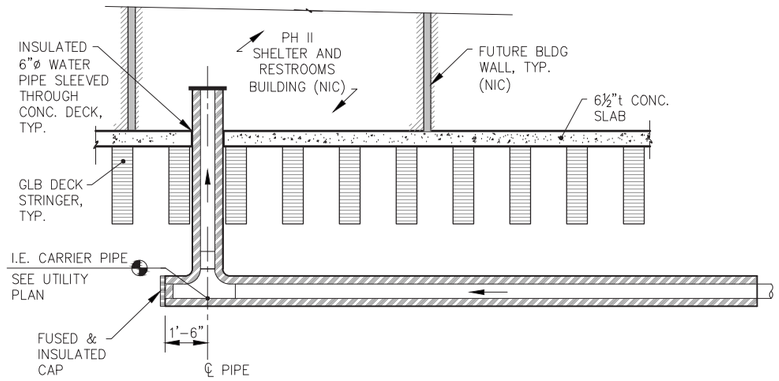

A / C1.08 WATER T-CONNECTION DETAIL

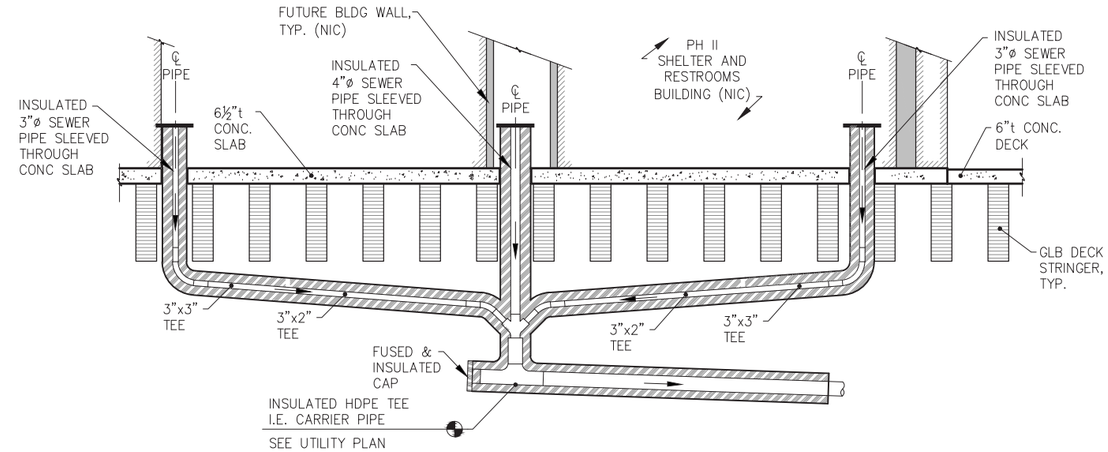

B / C1.08 SEWER WYE - CONNECTOR DETAIL

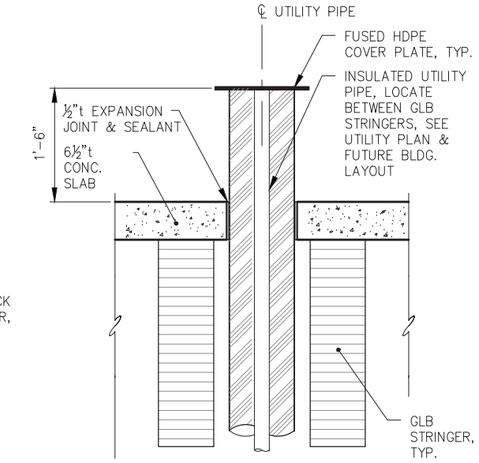

1 TYPICAL UTILITY SERVICE SLAB PENETRATION DETAIL

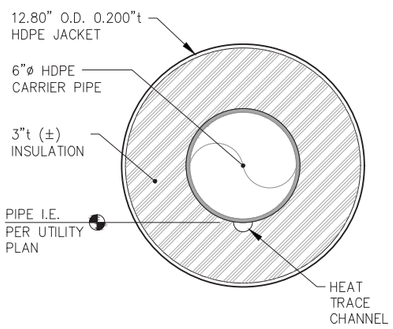

6"Ø INSULATED PIPE DETAIL

NOTE:
2"ø AND 4"ø SEWER PIPES ARE SIMILAR BUT DIFFERENT DIMENSIONS

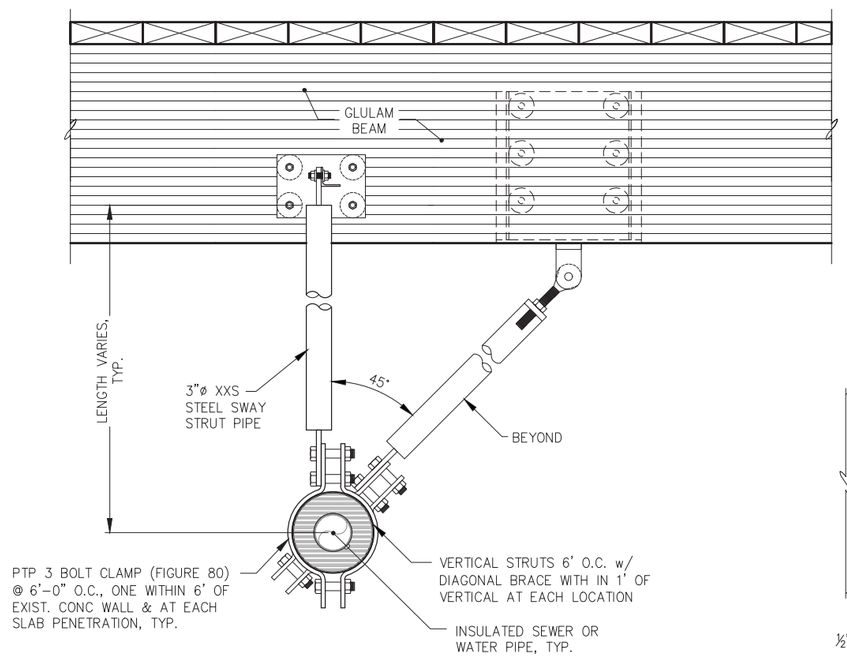

2 PIPE SWAY STRUT DETAIL

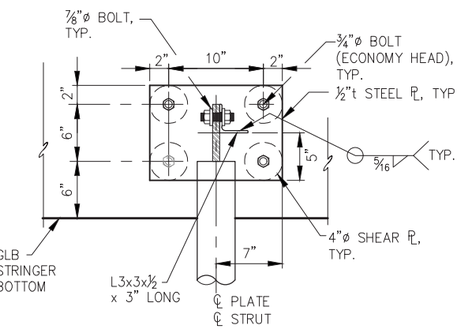

STRUT CONNECTION PLATE DETAIL

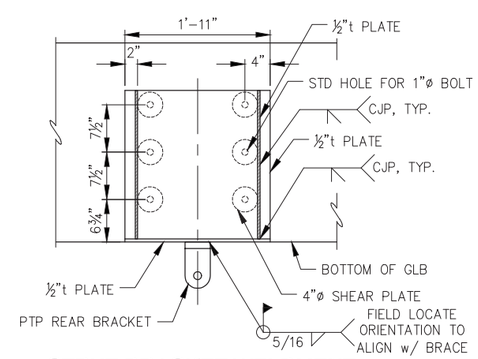

STRUT BRACKET WELDMENT ELEVATION

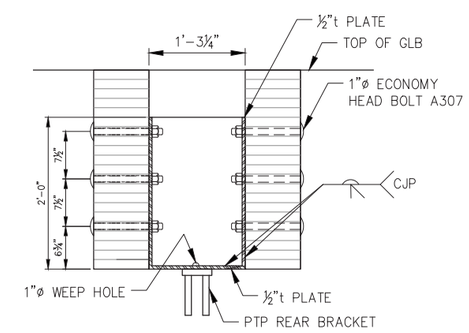

STRUT BRACKET WELDMENT SECTION

REVISIONS

REV.	DATE	DESCRIPTION	DWN.	CKD.	APP.

P | N | D ENGINEERS, INC.
9360 Glacier Highway Ste 100
Juneau, Alaska 99801
Phone: 907-586-2093
Fax: 907-586-2099
www.pndengineers.com

DESIGN: BCL CHECKED: CRS
DRAWN: PJD APPROVED: CRS
SCALE: AS SHOWN

STATE OF ALASKA 49TH Charles R. Somerville CE-8845 REGISTERED PROFESSIONAL ENGINEER
DATE: 5/23/2019

DOWNTOWN WATERFRONT IMPROVEMENTS PHASE I
CBJ CONTRACT NO. DH19-014

SHEET TITLE: **WATER & SEWER DETAILS**

PND PROJECT NO.: 182045 C.A.N. NO.: AECC250

C1.12

STRIPE POINT LAYOUT

POINT NO.	DESCRIPTION	NORTHING	EASTING
1	STRAIGHT AHEAD ARROW, TIP. SEE DETAILS	2361586.53	2544213.87
2	END 4" WHITE STRIPE	2361602.99	2544236.39
3	END 4" WHITE STRIPE	2361617.68	2544242.85
4	STRAIGHT AHEAD ARROW, TIP. SEE DETAILS	2361636.36	2544253.77
5	BEGIN 4" WHITE STRIPE	2361615.63	2544283.51
6	END 8" WHITE STRIPE	2361669.03	2544290.78
7	END 4" WHITE STRIPE	2361658.45	2544307.83
8	BEGIN 4" WHITE STRIPE	2361646.20	2544332.24
9	STRAIGHT AHEAD ARROW, TIP. SEE DETAILS	2361664.78	2544334.36
10	CORNER 24" WHITE STRIPE	2361656.46	2544348.60

STRIPE POINT LAYOUT (CON'T.)

POINT NO.	DESCRIPTION	NORTHING	EASTING
11	BEGIN 24" WHITE STRIPE	2361668.74	2544354.82
12	BEGIN 24" WHITE STRIPE	2361666.27	2544367.02
13	STRAIGHT AHEAD ARROW, TIP. SEE DETAILS	2361672.60	2544403.50
14	BEGIN 12" WHITE STOP BAR	2361666.60	2544408.65
15	BEGIN 24" WHITE STRIPE	2361680.50	2544404.14
16	BEGIN 24" WHITE STRIPE	2361655.60	2544420.87
17	STRAIGHT AHEAD ARROW, TIP. SEE DETAILS	2361652.87	2544404.24
18	CORNER 24" WHITE STRIPE	2361648.07	2544357.80
19	BEGIN 4" WHITE STRIPE	2361636.34	2544366.04
20	END 4" WHITE STRIPE	2361637.61	2544341.07

STRIPE POINT LAYOUT (CON'T.)

POINT NO.	DESCRIPTION	NORTHING	EASTING
21	BEGIN 4" WHITE STRIPE	2361625.36	2544365.48
22	STRAIGHT AHEAD ARROW, TIP. SEE DETAILS	2361616.90	2544370.79
23	STRAIGHT AHEAD ARROW, TIP. SEE DETAILS	2361566.66	2544290.76
24	BEGIN 4" WHITE STRIPE	2361564.20	2544268.01
25	END 4" WHITE STRIPE	2361576.45	2544243.60
26	END 4" WHITE STRIPE	2361565.47	2544243.04
27	STRAIGHT AHEAD ARROW, TIP. SEE DETAILS	2361561.51	2544236.53
28	END 24" WHITE STRIPE	2361562.06	2544220.71
29	END 24" WHITE STRIPE	2361571.28	2544212.82
30	STOP SIGN, SEE SIGNING SCHEDULE	2361682.94	2544397.05

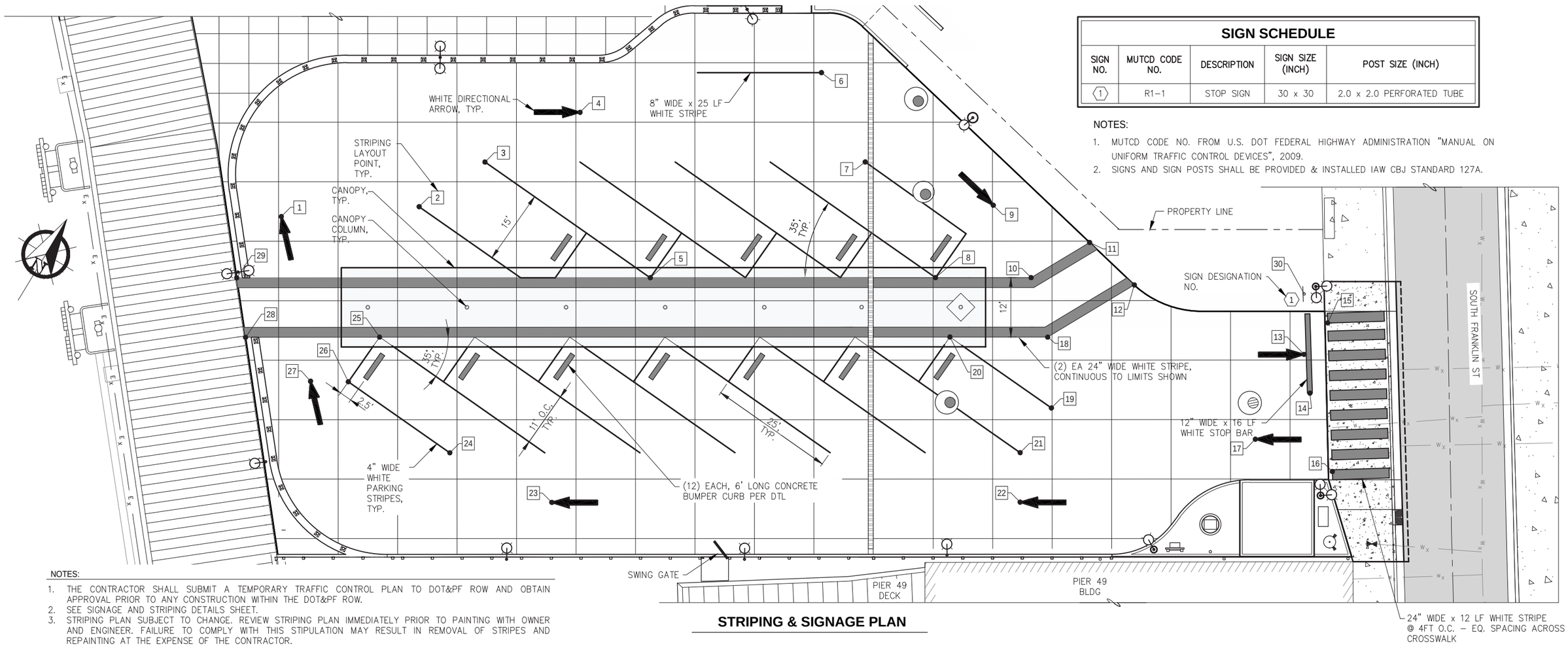

SIGN SCHEDULE

SIGN NO.	MUTCD CODE NO.	DESCRIPTION	SIGN SIZE (INCH)	POST SIZE (INCH)
1	R1–1	STOP SIGN	30 x 30	2.0 x 2.0 PERFORATED TUBE

NOTES:

1. MUTCD CODE NO. FROM U.S. DOT FEDERAL HIGHWAY ADMINISTRATION "MANUAL ON UNIFORM TRAFFIC CONTROL DEVICES", 2009.
2. SIGNS AND SIGN POSTS SHALL BE PROVIDED & INSTALLED IAW CBJ STANDARD 127A.

NOTES:

1. THE CONTRACTOR SHALL SUBMIT A TEMPORARY TRAFFIC CONTROL PLAN TO DOT&PF ROW AND OBTAIN APPROVAL PRIOR TO ANY CONSTRUCTION WITHIN THE DOT&PF ROW.
2. SEE SIGNAGE AND STRIPING DETAILS SHEET.
3. STRIPING PLAN SUBJECT TO CHANGE. REVIEW STRIPING PLAN IMMEDIATELY PRIOR TO PAINTING WITH OWNER AND ENGINEER. FAILURE TO COMPLY WITH THIS STIPULATION MAY RESULT IN REMOVAL OF STRIPES AND REPAINTING AT THE EXPENSE OF THE CONTRACTOR.

STRIPING & SIGNAGE PLAN

CITY & BOROUGH OF JUNEAU — DOCKS & HARBORS

REVISIONS

REV.	DATE	DESCRIPTION	DWN.	CKD.	APP.

PND ENGINEERS, INC.
9360 Glacier Highway Ste 100
Juneau, Alaska 99801
Phone: 907-586-2093
Fax: 907-586-2099
www.pndengineers.com

DESIGN: CRS CHECKED: CRS
DRAWN: PJD APPROVED: CRS
SCALE: SCALE IN FEET 0 10 20 FT.

STATE OF ALASKA 49TH — Charles R. Somerville CE-8845 — REGISTERED PROFESSIONAL ENGINEER
DATE: 5/23/2019

DOWNTOWN WATERFRONT IMPROVEMENTS PHASE I
CBJ CONTRACT NO. DH19-014

SHEET TITLE: **STRIPING & SIGNAGE PLAN**

PND PROJECT NO.: 182045 C.A.N. NO.: AECC250

C1.13

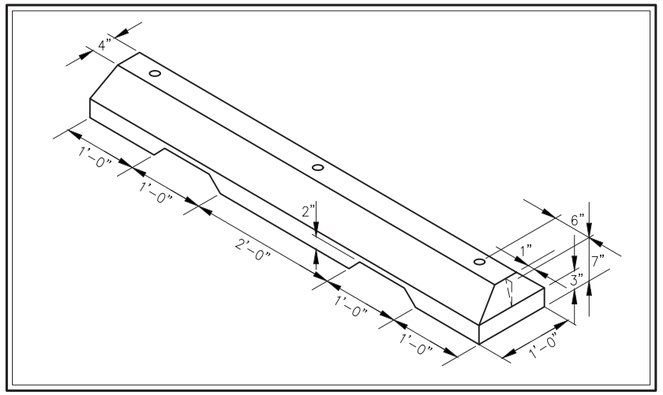

PRECAST CONCRETE BUMPER CURB DETAIL

(QUANTITY: 12 REQ'D.)

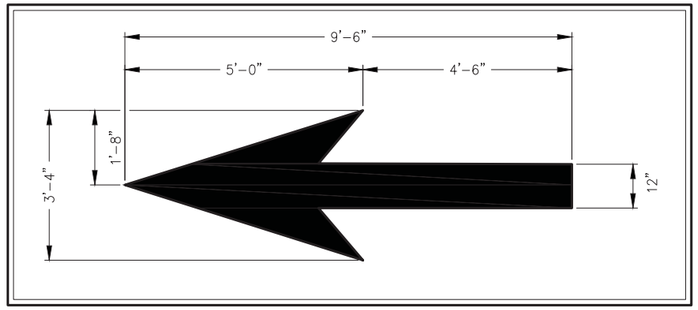

THROUGH LANE-USE ARROW

(QUANTITY: 8 REQ'D.)

NOTE:

ARROWS TO BE LOCATED AT APPROXIMATE LOCATION SHOWN ON SIGNING AND STRIPING PLAN. EXACT LOCATION TO BE DETERMINED IN FIELD AS INSTRUCTED BY ENGINEER.

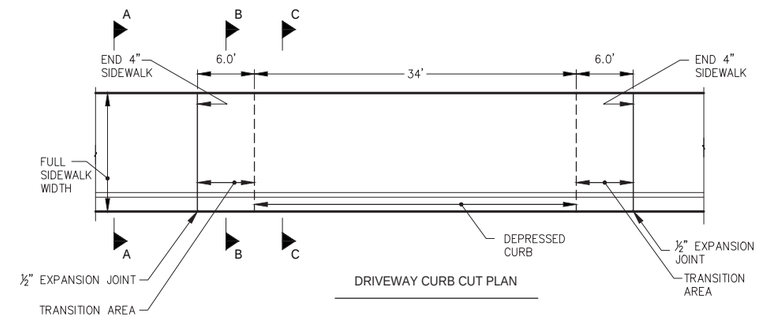

DRIVEWAY CURB CUT PLAN

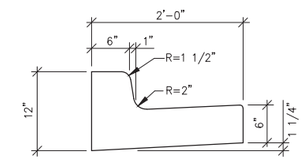

STANDARD CURB & GUTTER

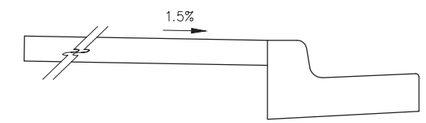

NORMAL SECTION A-A

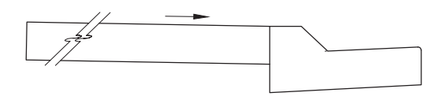

TRANSITION SECTION B-B

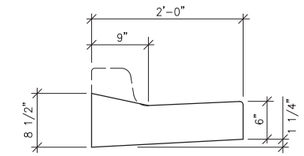

DEPRESSED CURB & GUTTER

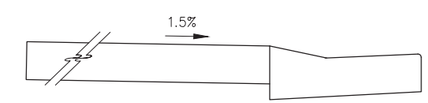

DEPRESSED SECTION C-C

DRIVEWAY CURB CUT, CURB & GUTTER DETAILS

(DOT&PF STD DTL I.20.20)

GENERAL CURB & GUTTER NOTES:

1. THE VERTICAL MATCH POINT FOR ALL CURB AND GUTTER TRANSITIONS SHALL BE THE FLOWLINE.
2. CURB AND GUTTER TRANSITIONS SHALL BE GRADUAL OVER A MIN DISTANCE OF 6 LF PER ENGINEER DIRECTION.
3. ALL STEEL MUST HAVE A MINIMUM OF 2" OF CONCRETE COVER.
4. ALL JOINTS AND SEAMS SHALL BE TOOLED AND EDGED, SEE SERIES 6 FOR CONTROL JOINT DTL.
5. STEEL TROWELING FINISH REQUIRED PRIOR TO BROOM FINISHING OF ALL SURFACES.
6. CONCRETE INTERNATIONAL CORPORATION ASHFORD FORMULA OR APPROVED EQUAL SHALL BE APPLIED AS A CURING COMPOUND. APPLICATION SHALL EXPLICITLY CONFORM TO THE MANUFACTURER'S RECOMMENDATIONS.
7. BED ALL TYPES OF CURB AND GUTTER W/ 6"t. MIN LAYER OF BASE COURSE GRADING D-1, ALL AROUND.
8. SUBBASE MATERIALS SHALL BE PER APPLICABLE FILL SECTION, EXCEPT AS NOTED.
9. CURBS SHALL HAVE POLY-FIBER REINFORCEMENT UNO, SEE SPECIFICATIONS.
10. PROVIDE A COARSE BROOMED FINISH ON RAMP RUNS PERPENDICULAR TO THE RAMP SLOPE.

REVISIONS

REV.	DATE	DESCRIPTION	DWN.	CKD.	APP.

PND ENGINEERS, INC.
9360 Glacier Highway Ste 100
Juneau, Alaska 99801
Phone: 907-586-2093
Fax: 907-586-2099
www.pndengineers.com

DESIGN: CRS CHECKED: CRS
DRAWN: PJD APPROVED: CRS
SCALE: SCALE IN FEET 0 10 20 FT.

STATE OF ALASKA 49TH Charles R. Somerville CE-8845 REGISTERED PROFESSIONAL ENGINEER
DATE: 5/23/2019

DOWNTOWN WATERFRONT IMPROVEMENTS PHASE I
CBJ CONTRACT NO. DH19-014

SHEET TITLE:
STRIPING, BUMPER CURB & DRIVEWAY CURB CUT

PND PROJECT NO.: 182045 C.A.N. NO.: AECC250

C1.14

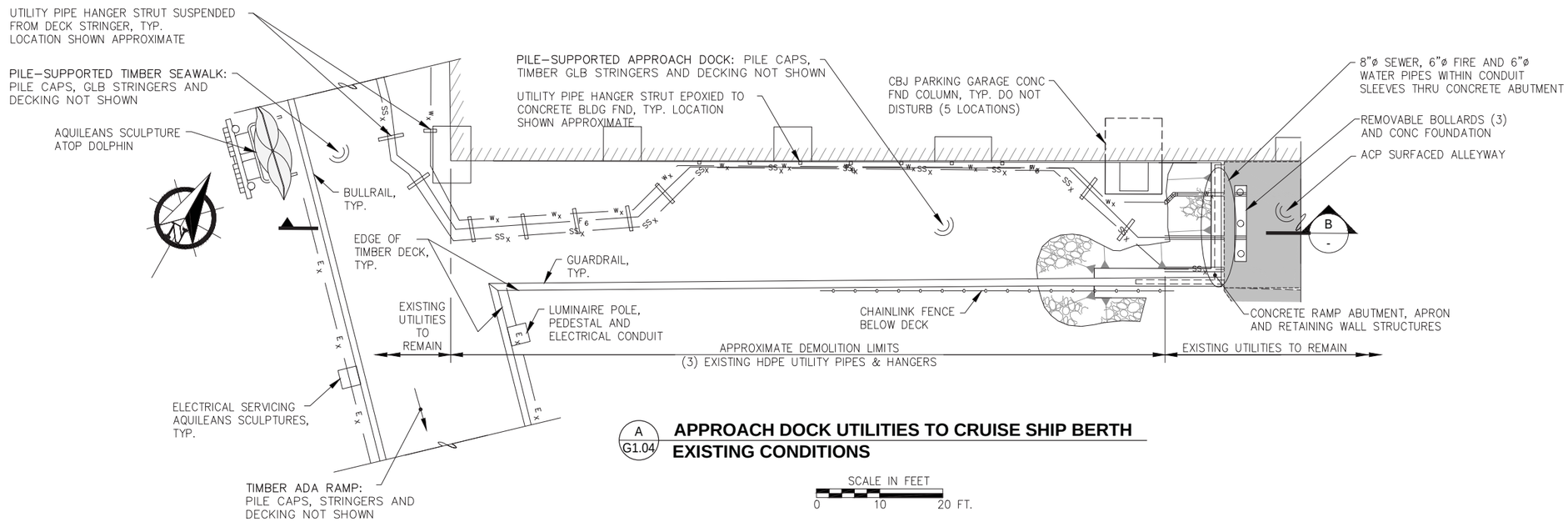

A G1.04 **APPROACH DOCK UTILITIES TO CRUISE SHIP BERTH**
EXISTING CONDITIONS

SCALE IN FEET
0 10 20 FT.

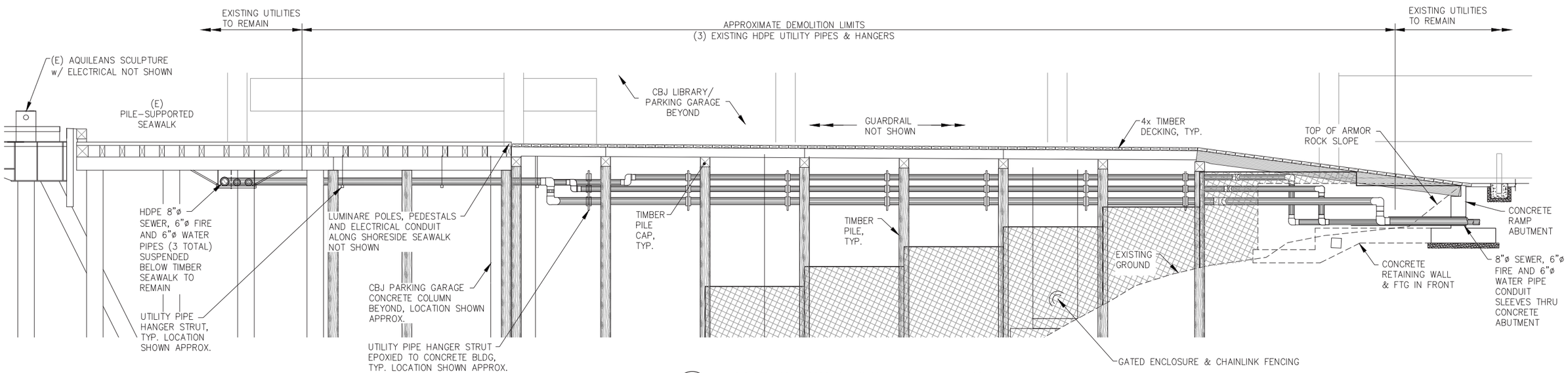

B **APPROACH DOCK EXISTING UTILITIES**
PROFILE

SCALE IN FEET
0 5 10 FT.

NOTE:
SEE ALSO DEMOLITION PLANS

REVISIONS

REV.	DATE	DESCRIPTION	DWN.	CKD.	APP.

PND ENGINEERS, INC.
9360 Glacier Highway Ste 100
Juneau, Alaska 99801
Phone: 907-586-2093
Fax: 907-586-2099
www.pndengineers.com

DESIGN: CRS CHECKED: CRS
DRAWN: PJD APPROVED: CRS
SCALE: AS SHOWN

STATE OF ALASKA 49TH Charles R. Somerville CE-8845 REGISTERED PROFESSIONAL ENGINEER
DATE: 5/23/2019

DOWNTOWN WATERFRONT IMPROVEMENTS PHASE I
CBJ CONTRACT NO. DH19-014

SHEET TITLE:
APPROACH DOCK UTILITIES EXISTING CONDITIONS

PND PROJECT NO.: 182045 C.A.N. NO.: AECC250

C1.15

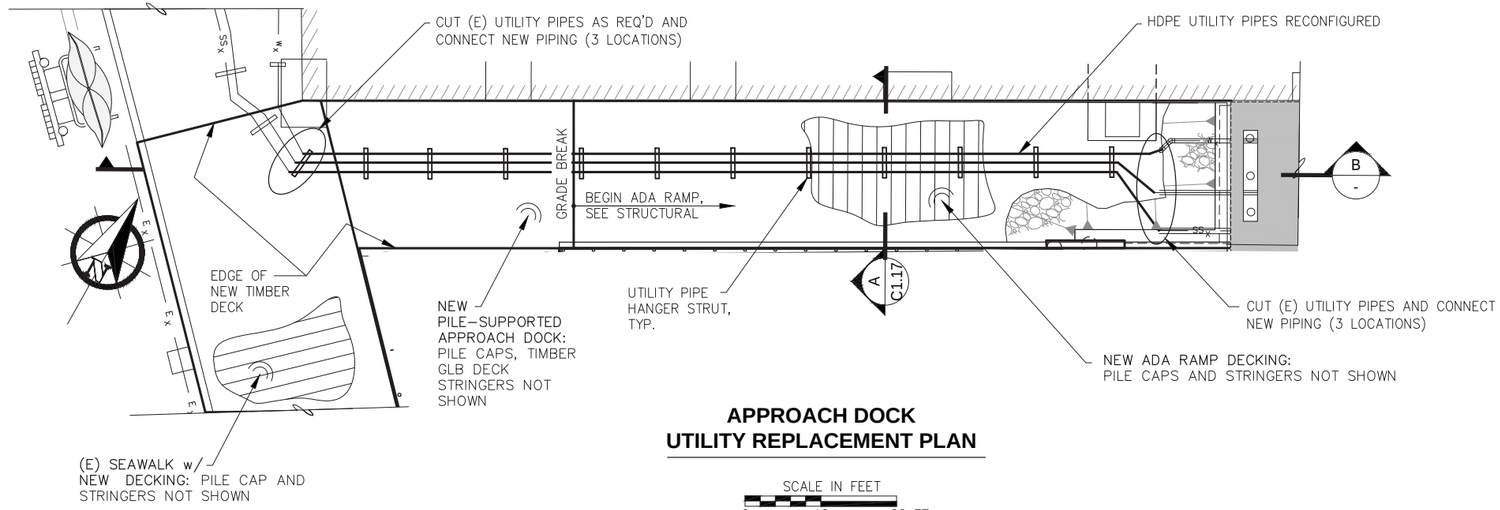

APPROACH DOCK UTILITY REPLACEMENT PLAN

SCALE IN FEET
0 10 20 FT.

UTILITY RELOCATION NOTES:

1. UTILITIES SHOWN APPROXIMATE, FIELD LOCATE AND ADJUST PER ENGINEER APPROVAL.
2. FABRICATE ALL BENDS IN UTILITY PIPES AS REQ'D.
3. EXISTING PIPING AND HANGER EQUIPMENT IN GOOD CONDITION MAY BE SALVAGED AND INCORPORATED INTO THE UTILITY RECONFIGURATION WORK TO THE EXTENT PRACTICABLE.

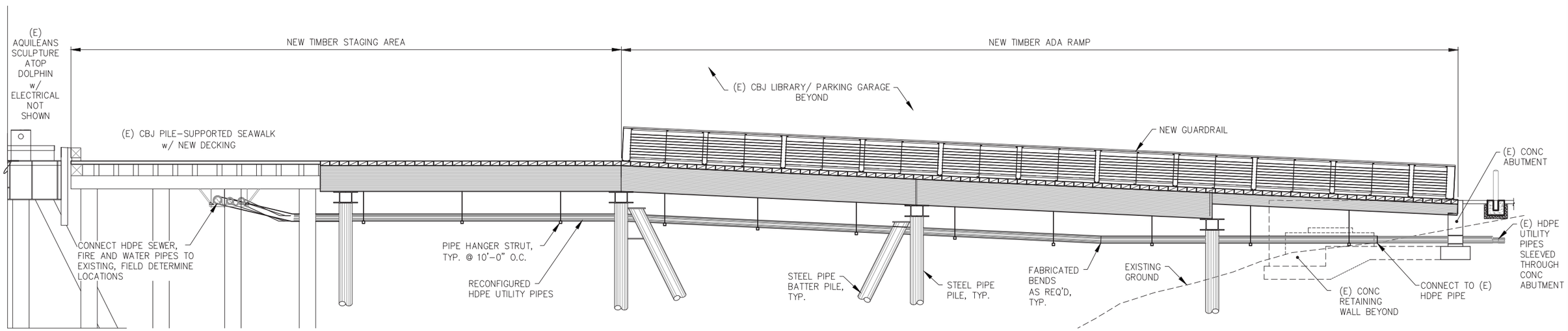

APPROACH DOCK PROFILE w/ REPLACEMENT UTILITY PIPES

B
-

SCALE IN FEET
0 5 10 FT.

REVISIONS

REV.	DATE	DESCRIPTION	DWN.	CKD.	APP.

PND ENGINEERS, INC.
9360 Glacier Highway Ste 100
Juneau, Alaska 99801
Phone: 907-586-2093
Fax: 907-586-2099
www.pndengineers.com

DESIGN: CRS CHECKED: CRS
DRAWN: PJD APPROVED: CRS
SCALE: AS SHOWN

STATE OF ALASKA 49TH Charles R. Somerville CE-8845 REGISTERED PROFESSIONAL ENGINEER
DATE: 5/23/2019

DOWNTOWN WATERFRONT IMPROVEMENTS PHASE I
CBJ CONTRACT NO. DH19-014

SHEET TITLE: **APPROACH DOCK UTILITIES REPLACEMENT PLAN**

PND PROJECT NO.: 182045 C.A.N. NO.: AECC250

C1.16

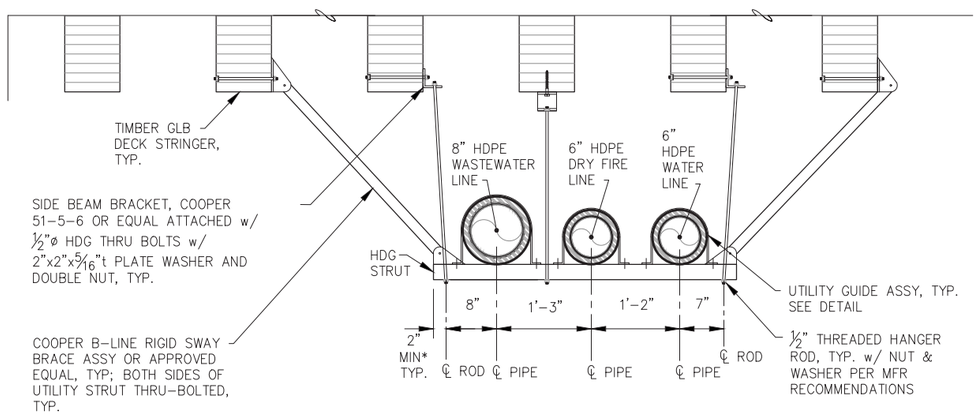

THREE-PIPE HANGER STRUT DETAIL

A
C1.16

HANGER STRUT NOTES:

1. HANGERS SHALL BE INSTALLED ON UTILITY LINE PATH @ 10'-0" OC MAX.
2. HANGERS SHALL BE INSTALLED ADJACENT TO EACH SIDE OF ALL FITTINGS, UNO. MAINTAIN 6" CLR TO FUSED JOINTS.
3. FIELD DRILL HANGER AND SWAY BRACE ATTACHMENT HOLES THROUGH TIMBER STRINGERS.
4. TREAT ALL HOLES AND CUTS IN TIMBER PER AWPA M-4
5. STRUT, ROD & SWAY BRACE LENGTHS SHALL VARY w/ PIPE ROUTE AND LOCATION.
6. ALL HANGER AND SWAY BRACE COMPONENTS SHALL BE HOT DIP GALVANIZED OR 316 SS.
7. ALL HANGERS AND SWAY BRACE COMPONENTS SHALL BE COORDINATED w/ MFR TO ENSURE SEISMIC LOAD CAPABILITY IS MET TO THE LOADS PROVIDED ON S1.01 TO 2013 NFPA STANDARDS. MAX ROD LENGTH SHALL BE 3'-0", UNO.

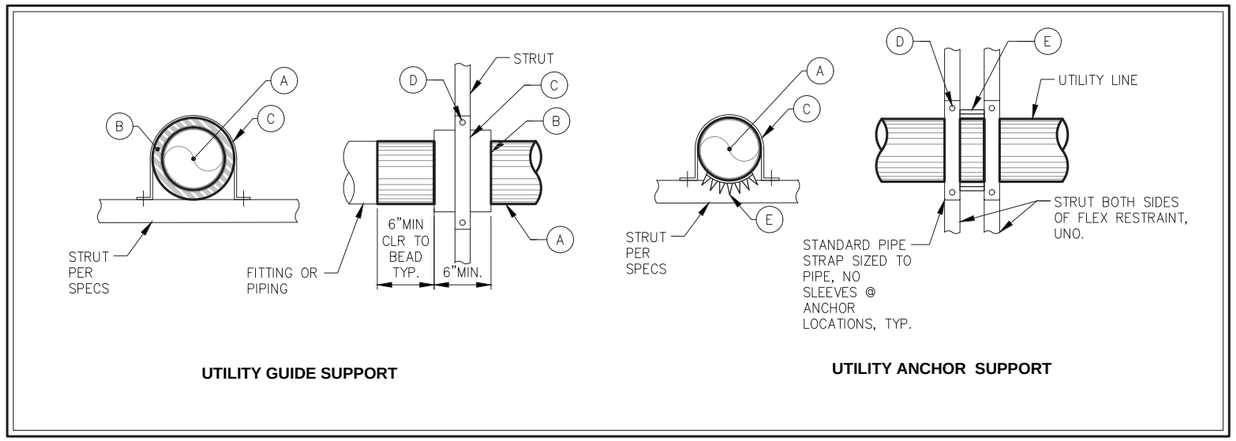

UTILITY GUIDE SUPPORT

UTILITY ANCHOR SUPPORT

UTILITY SUPPORT DETAILS

NOTES:

1. SLEEVES SHALL BE SLID OVER PIPE PRIOR TO BUTT WELD AS REQUIRED.
2. PIPE STRAPS SHALL BE SIZED FOR PIPE SLEEVES WHERE SLEEVES ARE REQ'D.
3. UTILITY GUIDE SUPPORTS SHALL HAVE 6" MIN CLEARANCE FROM BUTT-WELDED JOINTS.
4. STRUTS SUPPORTING (2) OR MORE PIPES SHALL BE SECURED w/ MIN (3) ½" BOLTS OR EPOXY ANCHORS, UNO.
5. STRUTS SUPPORTING (1) PIPE SHALL BE SECURED w/ MIN (2) ½" BOLTS OR EPOXY ANCHORS, UNO.

SUPPORT COMPONENT TABLE

UTILITY	A	B	C	D	E
6" WATER OR FIRE	6" HDPE UTILITY LINE	8" SDR 11 HDPE SLEEVE	STANDARD PIPE STRAP	½" 316 SS BOLT & CHANNEL NUT	ELECTROFUSION FLEX RESTRAINT
8" WASTEWATER	8" HDPE UTILITY LINE	10" SDR 13.5 HDPE SLEEVE	STANDARD PIPE STRAP	½" 316 SS BOLT & CHANNEL NUT	ELECTROFUSION FLEX RESTRAINT

REVISIONS

REV.	DATE	DESCRIPTION	DWN.	CKD.	APP.

PND ENGINEERS, INC.
9360 Glacier Highway Ste 100
Juneau, Alaska 99801
Phone: 907-586-2093
Fax: 907-586-2099
www.pndengineers.com

DESIGN: CRS CHECKED: CRS
DRAWN: PJD APPROVED: CRS
SCALE: AS SHOWN

STATE OF ALASKA 49TH Charles R. Somerville CE-8845 REGISTERED PROFESSIONAL ENGINEER
DATE: 5/23/2019

DOWNTOWN WATERFRONT IMPROVEMENTS PHASE I
CBJ CONTRACT NO. DH19-014

SHEET TITLE: **APPROACH DOCK UTILITIES SUPPORT DETAILS**

PND PROJECT NO.: 182045 C.A.N. NO.: AECC250

C1.17

STRUCTURAL GENERAL NOTES

APPLICABLE CODES AND STANDARDS

1. INTERNATIONAL CODE COUNCIL (ICC), "INTERNATIONAL BUILDING CODE (IBC) 2012".
2. AMERICAN ASSOCIATION OF STATE HIGHWAY BRIDGES (AASHTO), "STANDARD SPECIFICATIONS FOR HIGHWAY BRIDGES, SEVENTEENTH EDITION, 2002".
3. AMERICAN SOCIETY FOR TESTING AND MATERIALS (ASTM) STANDARDS, CURRENT EDITION.
4. AMERICAN INSTITUTE OF STEEL CONSTRUCTION (AISC), "MANUAL OF STEEL CONSTRUCTION, FIFTEENTH EDITION".
5. AMERICAN WELDING SOCIETY (AWS), "D1.1 STRUCTURAL WELDING CODE – STEEL, CURRENT EDITION".
6. AMERICAN CONCRETE INSTITUTE (ACI), "ACI MANUAL OF CONCRETE PRACTICE, CURRENT EDITION".
7. AMERICAN CONCRETE INSTITUTE (ACI), "318–14 BUILDING CODE REQUIREMENTS FOR STRUCTURAL CONCRETE AND COMMENTARY".
8. NATIONAL DESIGN SPECIFICATIONS FOR WOOD CONSTRUCTION (NDS), 2012 EDITION.
9. AMERICAN BUREAU OF SHIPPING (ABS), RULES FOR BUILDING AND CLASSING OFFSHORE INSTALLATIONS, 1997.
10. AMERICAN SOCIETY OF CIVIL ENGINEERS (ASCE), MINIMUM DESIGN LOADS AND ASSOCIATED CRITERIA FOR BUILDING AND OTHER STRUCTURES, ASCE 7–16

DESIGN CRITERIA

THE FOLLOWING LOADS ARE PRESCRIBED BY THE INTERNATIONAL BUILDING CODE, 2012. LOADS ARE ALSO GENERATED FROM THE AASHTO STANDARD SPECIFICATIONS FOR HIGHWAY BRIDGES 17TH EDITION – 2002 WHERE NOTED.

DESIGN PARAMETERS

DOCK LIVE LOAD:
- AASHTO H20 TRUCK (2 MONTH DURATION, Cd= 1.15)
- 400 PSF UNIFORM LOAD
- 50,000 lb. FORK LIFT AXLE LOAD (2 MONTH DURATION, Cd= 1.15)
- 200,000 lb. TRUCK CRANE (7 DAY DURATION, Cd= 1.25), OUT RIGGER LOAD (1–DAY DURATION, Cd=1.33) WHILE IN OPERATION OUTRIGGER MUST BE SPREAD OVER A MIN OF 5 STRINGERS AND THE LIFTING PLAN SHALL BE APPROVED BY A REGISTERED PROFESSIONAL ENGINEER IN THE STATE OF ALASKA AND SUBMITTED TO THE ENGINEER FOR APPROVAL.

VEHICLE GUARDRAILS:
- 6,000# POINT LOAD ANYWHERE ON RAIL OR POST
- 50 PLF @ HORIZONTAL PEDESTRIAN RAILS.

ADA APPROACH RAMP:
- AASHTO H15 TRUCK (7 DAY DURATION, CD=1.25)
- 200PSF UNIFORM LOAD

OVER FRAMING:
- 100 PSF UNIFORM AREA LOAD
- AASHTO H10 TRUCK (7 DAY DURATION (1)=1.25)

SNOW LOAD

GROUND SNOW LOAD = 70 PSF UNIFORM

SEISMIC LOAD

SITE CLASS =C, SOFT ROCK
SEISMIC DESIGN CATEGORY = D SIESMIC IMPORTANCE FACTOR = Ie=1.0
SS= 0.528g SDS=0.418g SIESMIC RESPONSE MODIFICATION FACTOR = R=1.0
SS= 0.356g SDS=0.343g SIESMIC RESPONSE COEFFICIENT FACTOR = CS=0.418

WIND LOAD

IBC 140 MPH 3–SECOND GUST, EXPOSURE D UNLESS OTHERWISE NOTED.
WIND OCCUPANCY IMPORTANCE = II

FLOOD LOAD

CODE: ASCE 7–16
BASE FLOOD ELEVATION (BFE) = +25' MLLW
BREAKING WAVE HEIGHT (Hb) = 3'
STILL WATER DEPTH (ds) = 50'

ABBREVIATIONS

ø	DIAMETER
@	AT
ADA	AMERICANS WITH DISABILITIES ACT
APPROX	APPROXIMATELY
ASCE	AMERICAN SOCIETY OF CIVIL ENGINEERS
AASHTO	AMERICAN ASSOCIATION OF STATE HIGHWAY TRANSPORTATION OFFICIALS
ASTM	AMERICAN SOCIETY OF TESTING AND MATERIALS
BTM	BOTTOM
CJ	CONSTRUCTION JOINT
℄	CENTERLINE
CON	CONNECTION
CONC.	CONCRETE
CONT	CONTINUOUS
CP	COMPLETE PENETRATION
CPP	CORRUGATED PLASTIC PIPE
CRNRS	CORNERS
CS	COUNTER SINK
DBL	DOUBLE
E	EXISTING
EA.	EACH
ELEV.	ELEVATION
E.W.	EACH WAY
FLGS	FLANGES
FTG	FOOTING
FND	FOUNDATION
GALV	GALVANIZED
GLB	GLUE–LAMINATED BEAM
GLULAM	GLUE LAMINATED TIMBER
HORZ.	HORIZANTAL
HDPE	HIGH–DENSITY POLYETHYLENE
kip	1000 POUNDS
Lb	POUND
LBS	POUNDS
MI	MALLEABLE IRON
MID	MIDDLE
MIN	MINIMUM
MLLW	MEAN LOW LOW WATER
NIC	NOT IN CONTRACT
NO.	NUMBER
O.C.	ON CENTER
OS.	OWNER SUPPLIED
OPP.	OPPOSITE
OSHA	OCCUPATIONAL SAFETY AND HEALTH ADMINISTRATION
PL	PLATE
PSF	POUND PER SQUARE FOOT
PLF	POUND PER LINEAR FOOT
PED	PEDESTRIAN
R	RADIUS
REG.	REGULATION
REQ'D	REQUIRED
SC	SLIP CRITICAL
SIM	SIMILAR
S.S.	STAINLESS STEEL
STA	STATION
STD	STANDARD
TRTD	TREATED
TYP.	TYPICAL
t	THICKNESS
UNO	UNLESS NOTED OTHERWISE
VERT.	VERTICAL
W/	WITH
W/OUT	WITH OUT
WP	WORK POINT

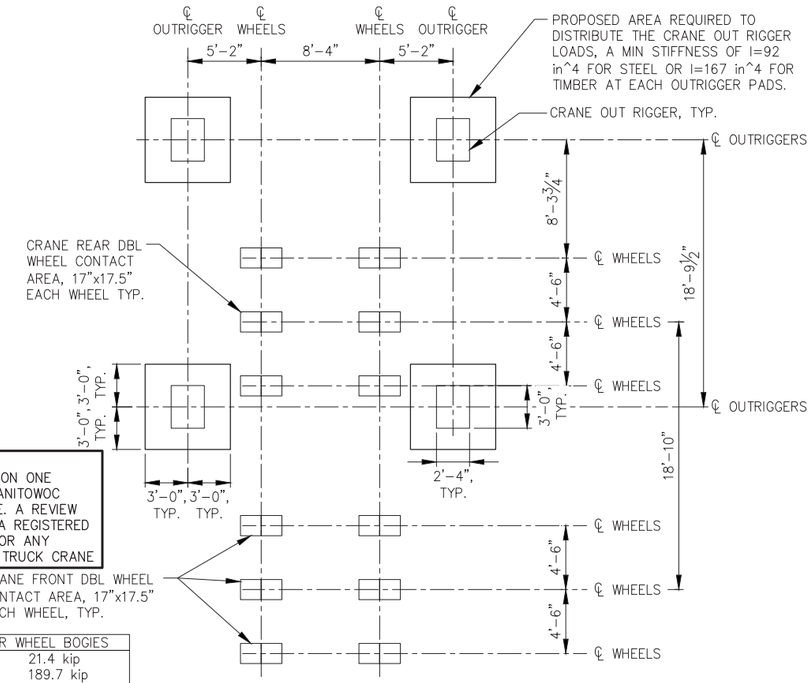

NOTE:
CRANE LOADING IS BASED ON ONE LENGTH OF BOOM ON A MANITOWOC 3900 SERIES TRUCK CRANE. A REVIEW SHALL BE COMPLETED BY A REGISTERED PROFESSIONAL ENGINEER FOR ANY VARIATION OF THE DESIGN TRUCK CRANE

CRANE FRONT AND REAR WHEEL BOGIES		
FRONT	= 70.6 kip	21.4 kip
REAR	= 140.5 kip	189.7 kip
OUTRIGGER = 230kip OVER (2) OUTRIGGERS		

CRANE LOAD DISTRIBUTION REQUIREMENTS

FORKLIFT AXLE LOADS
FRONT = 44 kip
REAR = 6 kip

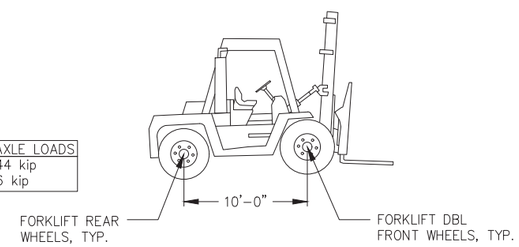

FORKLIFT ELEVATION

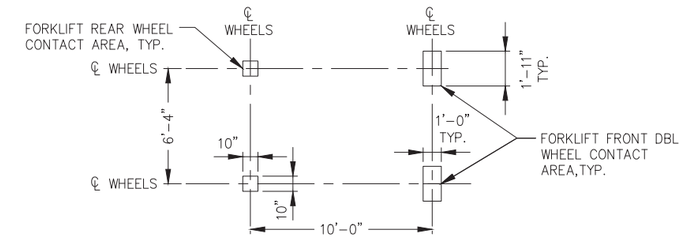

FORKLIFT WHEEL DISTRIBUTION LAYOUT

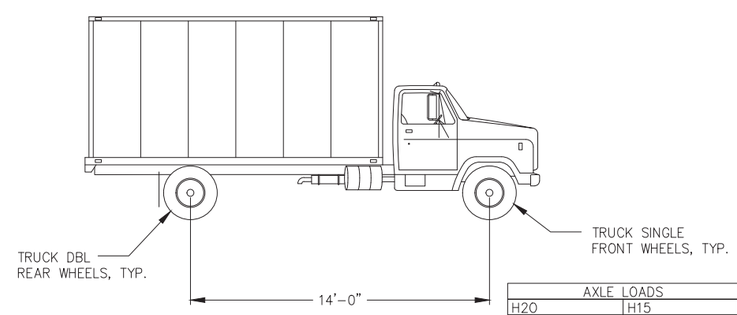

AXLE LOADS		
H20	H15	H10
FRONT = 8 kip	FRONT = 6 kip	FRONT = 4 kip
REAR = 32 kip	REAR = 24 kip	REAR = 16 kip

AASHTO TRUCK ELEVATION

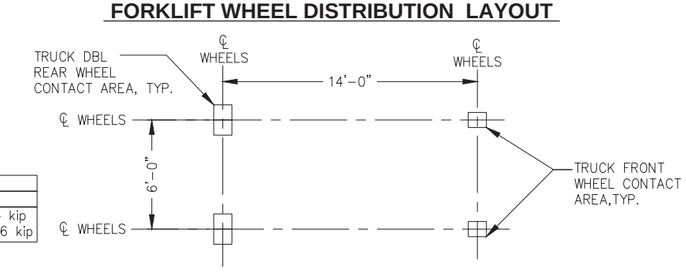

AASHTO TRUCK WHEEL DISTRIBUTION LAYOUT

REVISIONS

REV.	DATE	DESCRIPTION	DWN.	CKD.	APP.

PND ENGINEERS, INC.
9360 Glacier Highway Ste 100
Juneau, Alaska 99801
Phone: 907-586-2093
Fax: 907-586-2099
www.pndengineers.com

STATE OF ALASKA 49TH Charles R. Somerville CE-8845 REGISTERED PROFESSIONAL ENGINEER
DATE: 5/23/2019

DESIGN: MDS CHECKED: CRS
DRAWN: KLL APPROVED: CRS
SCALE: NTS

DOWNTOWN WATERFRONT IMPROVEMENTS PHASE I
CBJ CONTRACT NO. DH19-014

SHEET TITLE: **STRUCTURAL GENERAL NOTES**

PND PROJECT NO.: 182045 C.A.N. NO.: AECC250

S1.01

PILE SCHEDULE SUMMARY TABLE

LOCATION		DIA. (INCH)	THICKNESS (INCH)	BATTER	SUPPLY LENGTH (ft)	ULTIMATE LOAD (kips)	
						TENSION	COMPRESSION
CONCRETE DOCK	1B VERT	18"	0.500		90		370
	1C VERT	18"	0.500		90		400
	1C BATTER	18"	0.500	2V:1H	110	70	70
	1D VERT	18"	0.500		100		420
	1G VERT	18"	0.500		100		220
	2B VERT	18"	0.500		80		750
	2C VERT	18"	0.500		90		820
	2C BATTER	18"	0.500	2V:1H	100	70	70
	2D VERT	18"	0.500		90		620
	2D.5 VERT	18"	0.500		90		450
	2G VERT	18"	0.500		100		250
	3B VERT	18"	0.500		80		750
	3C VERT	18"	0.500		90		820
	3C BATTER	18"	0.500	2V:1H	110	70	70
	3D VERT	18"	0.500		90		620
	3D.5 VERT	18"	0.500		90		510
	3G VERT	18"	0.500		100		300
	4B VERT	18"	0.500		80		770
	4C VERT	18"	0.500		90		840
	4C BATTER	18"	0.500	2V:1H	100	70	70
	4D VERT	18"	0.500		90		840
	4E VERT	18"	0.500		90		620
	4G VERT	18"	0.500		90		200
	5B VERT	18"	0.500		90		730
	5C VERT	18"	0.500		90		800
	5C BATTER	18"	0.500	2V:1H	100	70	70
	5D VERT	18"	0.500		90		800
	5E VERT	18"	0.500		90		640
	5G VERT	18"	0.500		90		240
	6B.5 VERT	18"	0.500		90		710
	6C VERT	18"	0.500		90		760
	6D BATTER	18"	0.500	2V:1H	90	70	70
	6D VERT	18"	0.500		90		1020
	6E VERT	18"	0.500		90		880
	6G VERT	18"	0.500		90		370

PILE SCHEDULE SUMMARY TABLE

LOCATION		DIA. (INCH)	THICKNESS (INCH)	BATTER	SUPPLY LENGTH (ft)	ULTIMATE LOAD (kips)	
						TENSION	COMPRESSION
TIMBER DOCK	7C.5 VERT	18"	0.500		80		570
	7D VERT	18"	0.500		80		800
	7D BATTER	18"	0.500	2V:1H	100	70	70
	7E VERT	18"	0.500		80		1060
	7G VERT	18"	0.500		90		530
	8D VERT	16"	0.500		80		650
	8D BATTER	16"	0.500	2V:1H	90	70	70
	8E VERT	16"	0.500		80		850
	8G VERT	16"	0.500		80		540
	9E BATTER NW	16"	0.500	2V:1H	80		450
	9E BATTER SE	16"	0.500	2V:1H	90		450
	9F BATTER NW	16"	0.500	2V:1H	80		450
	9F BATTER SE	16"	0.500	2V:1H	90		450
	9G VERT	16"	0.500		80		170
	10E BATTER NW	16"	0.500	2V:1H	80		450
	10E BATTER SE	16"	0.500	2V:1H	90		450
	10F BATTER NW	16"	0.500	2V:1H	80		450
	10F BATTER SE	16"	0.500	2V:1H	90		450
	10G VERT	16"	0.500		80		280
	11E BATTER NW	16"	0.500	2V:1H	80		450
	11E BATTER SE	16"	0.500	2V:1H	80		450
	11F BATTER NW	16"	0.500	2V:1H	70		450
	11F BATTER SE	16"	0.500	2V:1H	90		450
	11G VERT	16"	0.500		80		380
	12E VERT	16"	0.500		70		680
	12F VERT	16"	0.500		70		710
	12G VERT	16"	0.500		80		380
APPROACH RAMP	13AA VERT	16"	0.500		70		200
	13BB VERT	16"	0.500		70	50	210
	13BB BATTER	16"	0.500	2V:1H	70	81	81
	13CC VERT	16"	0.500		70	54	210
	13CC BATTER	16"	0.500	2V:1H	70	84	81
	13G VERT	16"	0.500		70		110
	14AA VERT	16"	0.500		70		150
	14BB VERT	16"	0.500		70		160
	14CC VERT	16"	0.500		70		160
	14G VERT	16"	0.500		70		90
CANOPY FND.	3A' VERT	16"	0.500		90		100

RETAINING WALL PILE SCHEDULE SUMMARY TABLE

PILE DESIGNATION	NORTHING	EASTING	DIA. (INCH)	THICKNESS (INCH)	SUPPLY LENGTH (ft)	ULTIMATE LOAD (kips)
						COMPRESSION
1	2361819.69	2544107.73	24	0.750	60	500
2	2361816.99	2544103.94	24	0.750	60	500
3	2361809.47	2544108.93	24	0.750	60	950
4	2361801.11	2544114.47	24	0.750	60	500
5	2361792.78	2544120.00	24	0.750	60	500
6	2361784.46	2544125.51	24	0.750	60	950
7	2361776.11	2544131.05	24	0.750	70	500
8	2361767.78	2544136.58	24	0.750	70	500
9	2361759.45	2544142.10	24	0.750	70	950
10	2361751.11	2544147.63	24	0.750	70	500
11	2361742.78	2544153.16	24	0.750	70	500
12	2361734.44	2544158.68	24	0.750	70	950
13	2361731.88	2544169.00	24	0.750	80	500
14	2361729.74	2544179.60	24	0.750	80	500
15	2361727.59	2544190.19	24	0.750	80	500
16	2361725.44	2544200.79	24	0.750	80	950
17	2361718.06	2544207.73	24	0.750	70	500
18	2361709.73	2544213.26	24	0.750	70	500
19	2361701.39	2544218.78	24	0.750	70	950
20	2361699.36	2544228.81	24	0.750	70	500
21	2361697.33	2544238.84	24	0.750	70	500
22	2361695.30	2544248.86	24	0.750	70	500
23	2361693.27	2544258.89	24	0.750	70	500
24	2361691.24	2544268.91	24	0.750	70	700
25	2361689.21	2544278.94	24	0.750	70	700
26	2361687.18	2544288.97	24	0.750	70	500
27	2361675.04	2544296.58	24	0.750	70	950
28	2361664.59	2544303.14	24	0.750	70	500
29	2361654.14	2544309.70	24	0.750	70	950
30	2361643.69	2544316.25	24	0.750	70	500
31	2361633.24	2544322.81	24	0.750	70	950
32	2361623.10	2544329.17	24	0.750	70	500
33	2361612.97	2544335.53	24	0.750	70	950
34	2361602.84	2544341.89	24	0.750	70	500
35	2361592.70	2544348.24	24	0.750	70	950
36	2361597.33	2544357.52	24	0.750	70	500
SPARE	NA	NA	24	0.750	40	-

NOTES:

1. ALL PILES SHALL BE FABRICATED WITH AN APF INSIDE FLANGE OPEN CUTTING SHOE.
2. RETAINING WALL PILES ARE OWNER SUPPLIED, COORDINATE WITH OWNER FOR STORAGE LOCATION, CONTRACTOR SHALL SORT AND DELIVER PILES FROM STORAGE LOCATION TO JOB SITE, INCIDENTAL TO PILE INSTALLATION BID ITEM.

CITY & BOROUGH OF JUNEAU DOCKS & HARBORS

REVISIONS

REV.	DATE	DESCRIPTION	DWN.	CKD.	APP.

P N D ENGINEERS, INC.
9360 Glacier Highway Ste 100
Juneau, Alaska 99801
Phone: 907-586-2093
Fax: 907-586-2099
www.pndengineers.com

DESIGN: MDS CHECKED: CRS
DRAWN: PJD APPROVED: CRS
SCALE: NTS

STATE OF ALASKA 49TH Charles R. Somerville CE-8845 REGISTERED PROFESSIONAL ENGINEER
DATE: 5/23/2019

DOWNTOWN WATERFRONT IMPROVEMENTS PHASE I
CBJ CONTRACT NO. DH19-014

SHEET TITLE: **PILE SCHEDULES**

PND PROJECT NO.: 182045 C.A.N. NO.: AECC250

S1.02

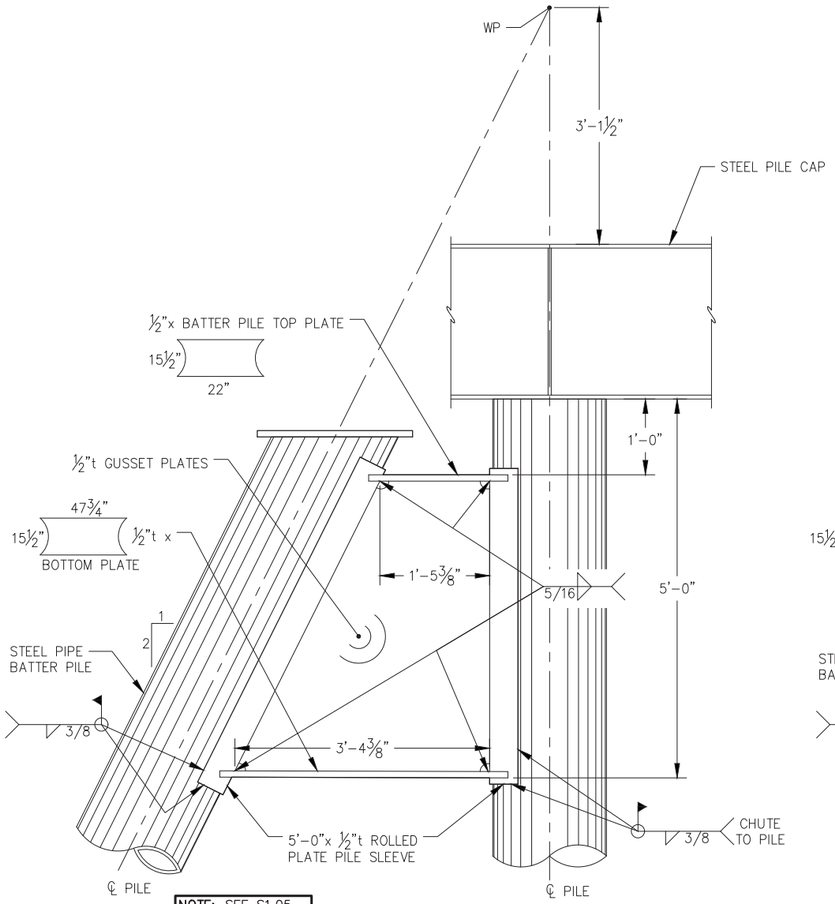

NOTE: SEE S1.05 FOR VERTICAL PILE WELD TO CAP

ELEVATION

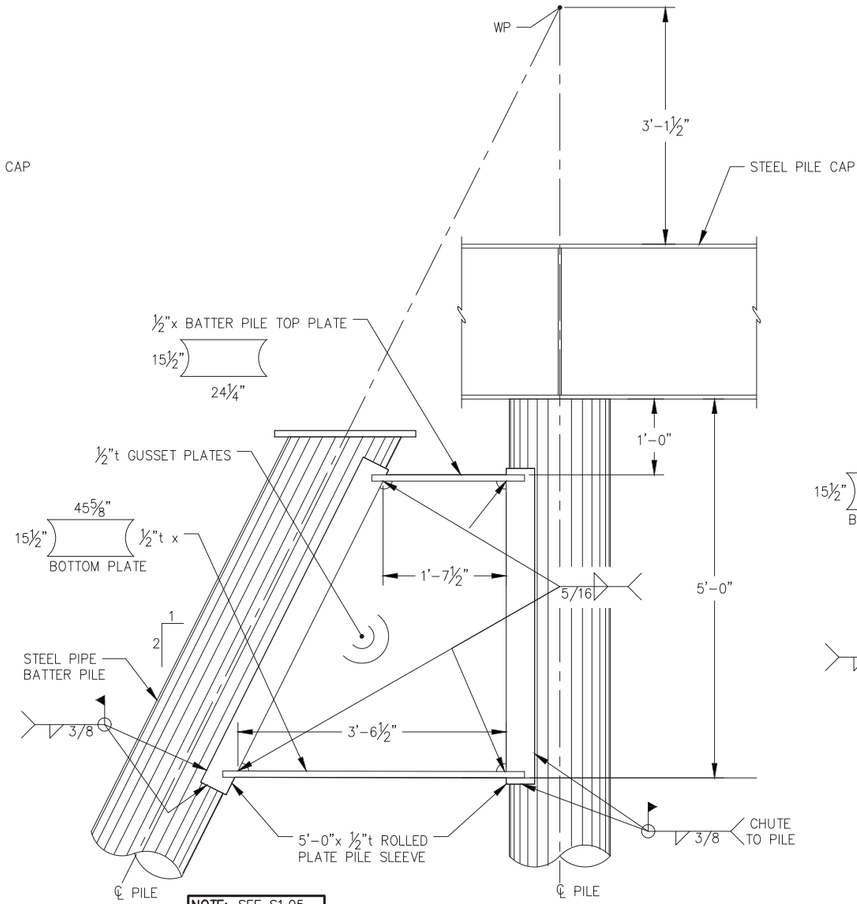

NOTE: SEE S1.05 FOR VERTICAL PILE WELD TO CAP

ELEVATION

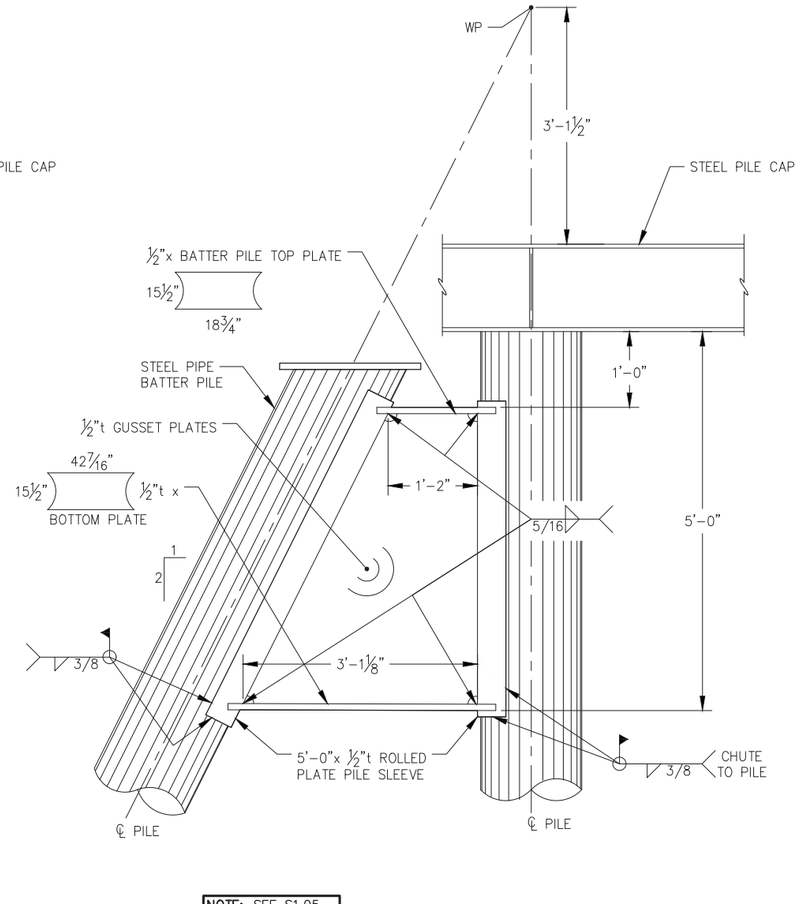

NOTE: SEE S1.05 FOR VERTICAL PILE WELD TO CAP

ELEVATION

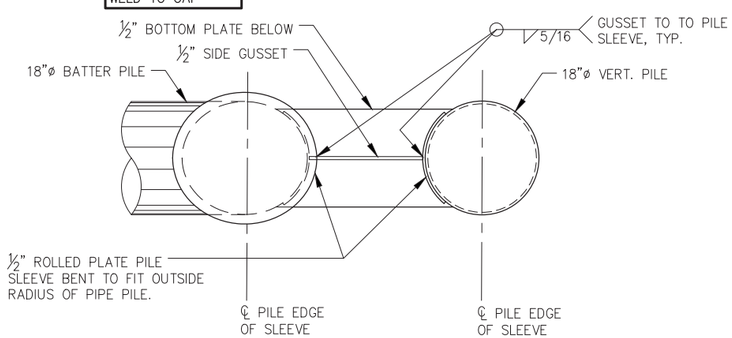

TYPICAL 18" SIDE BATTER PILE CONNECTION PLAN

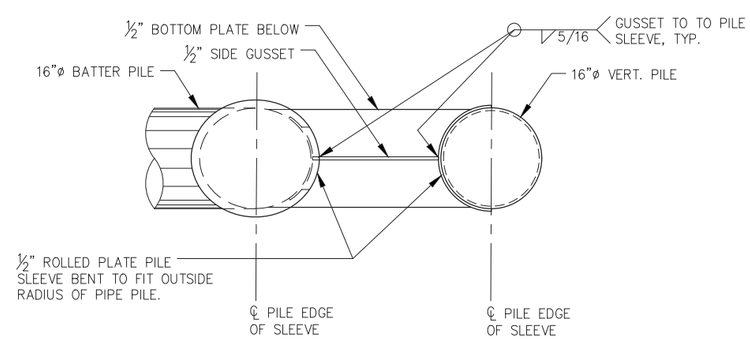

TYPICAL 16" SIDE BATTER PILE CONNECTION PLAN AT W24 PILE CAP

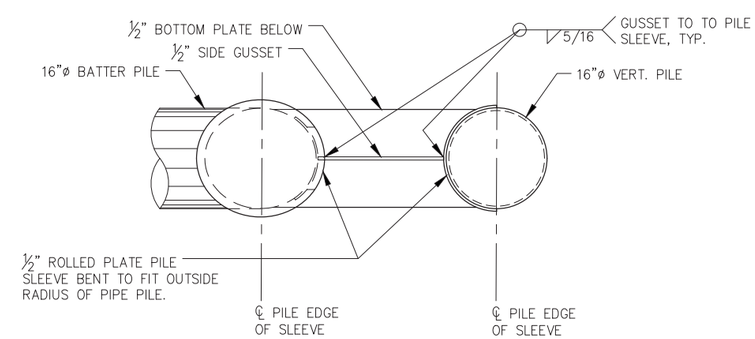

TYPICAL 16" SIDE BATTER PILE CONNECTION PLAN AT HP14 PILE CAP

CITY & BOROUGH OF JUNEAU — DOCKS & HARBORS

REVISIONS

REV.	DATE	DESCRIPTION	DWN.	CKD.	APP.

P | N | D ENGINEERS, INC.
9360 Glacier Highway Ste 100
Juneau, Alaska 99801
Phone: 907-586-2093
Fax: 907-586-2099
www.pndengineers.com

DESIGN: MDS CHECKED: CRS
DRAWN: KLL APPROVED: CRS
SCALE: NTS

STATE OF ALASKA 49TH Charles R. Somerville CE-8845 REGISTERED PROFESSIONAL ENGINEER
DATE: 5/23/2019

DOWNTOWN WATERFRONT IMPROVEMENTS PHASE I
CBJ CONTRACT NO. DH19-014

SHEET TITLE:
PILE TYPICAL DETAILS

PND PROJECT NO.: 182045 C.A.N. NO.: AECC250

S1.03

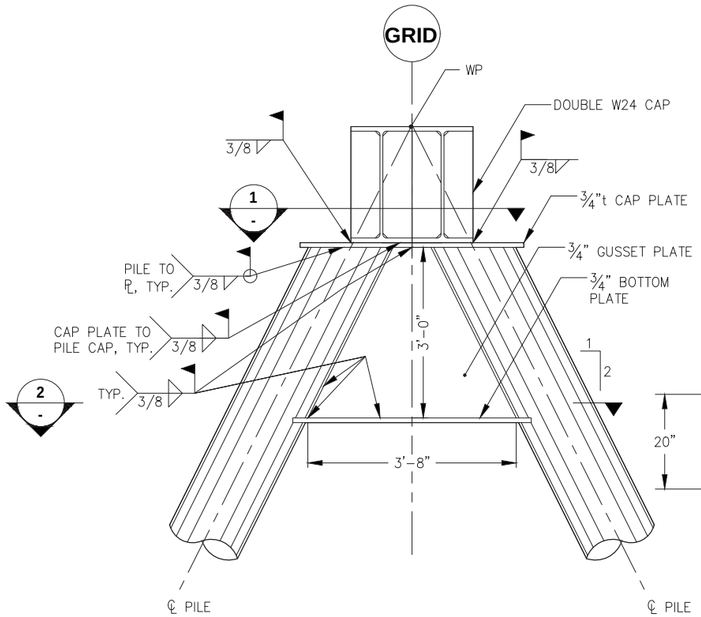

TYPICAL DOUBLE BATTER PILE CONNECTION

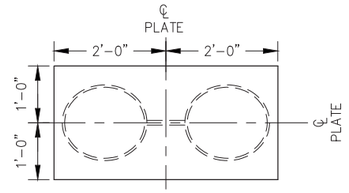

1 - TOP PLATE DETAIL

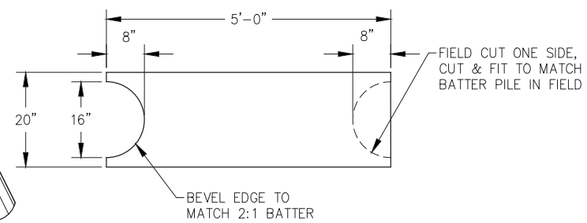

2 - BOTTOM PLATE DETAIL

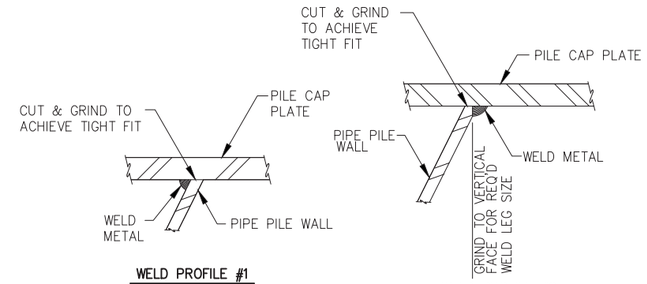

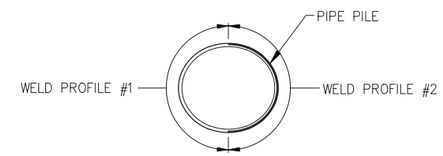

PLAN

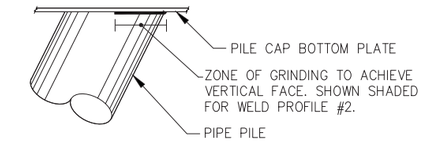

BATTER PILE TOP PLATE ELEVATION

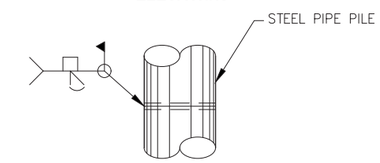

TYPICAL SPLICE ELEVATION

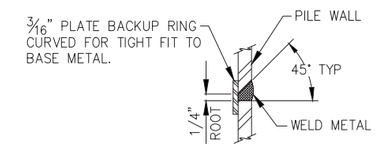

TYPICAL SPLICE SECTION

TYPICAL PILE CONNECTION DETAILS

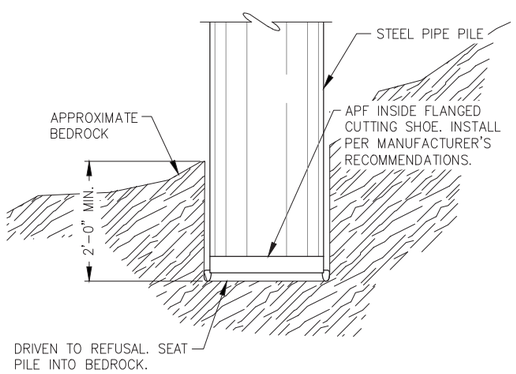

PILE DRIVING TIP DETAIL

REVISIONS

REV.	DATE	DESCRIPTION	DWN.	CKD.	APP.

PND ENGINEERS, INC.
9360 Glacier Highway Ste 100
Juneau, Alaska 99801
Phone: 907-586-2093
Fax: 907-586-2099
www.pndengineers.com

DESIGN: MDS CHECKED: CRS
DRAWN: KLL APPROVED: CRS
SCALE: NTS

STATE OF ALASKA 49TH Charles R. Somerville CE-8845 REGISTERED PROFESSIONAL ENGINEER
DATE: 5/23/2019

DOWNTOWN WATERFRONT IMPROVEMENTS PHASE I
CBJ CONTRACT NO. DH19-014

SHEET TITLE: **PILE TYPICAL DETAILS**

PND PROJECT NO.: 182045 C.A.N. NO.: AECC250

S1.04

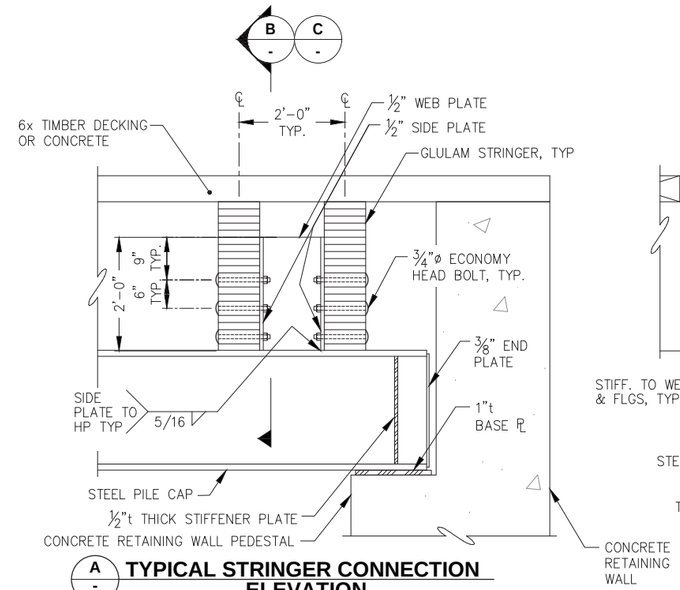

A - TYPICAL STRINGER CONNECTION ELEVATION

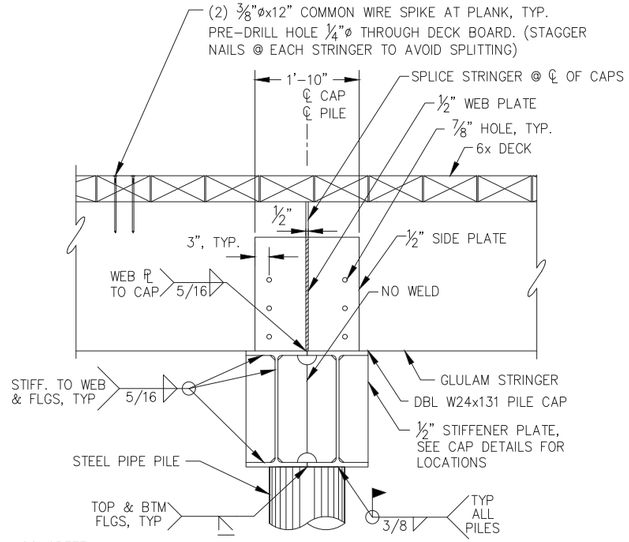

B - TYPICAL PILE CAP SECTION AT TIMBER DECK

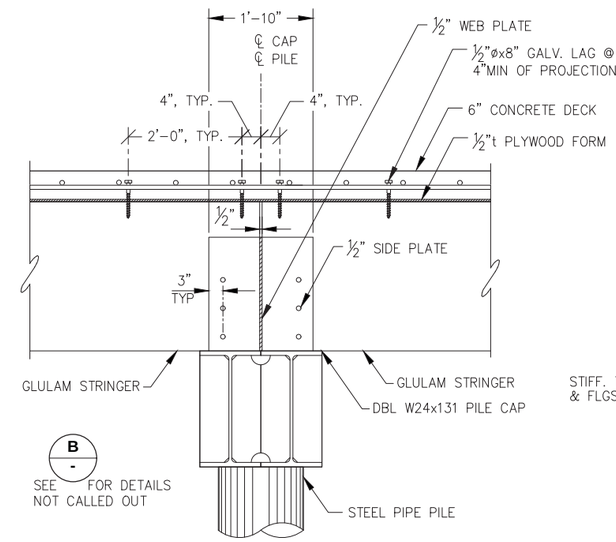

C - TYPICAL PILE CAP SECTION AT CONCRETE DECK

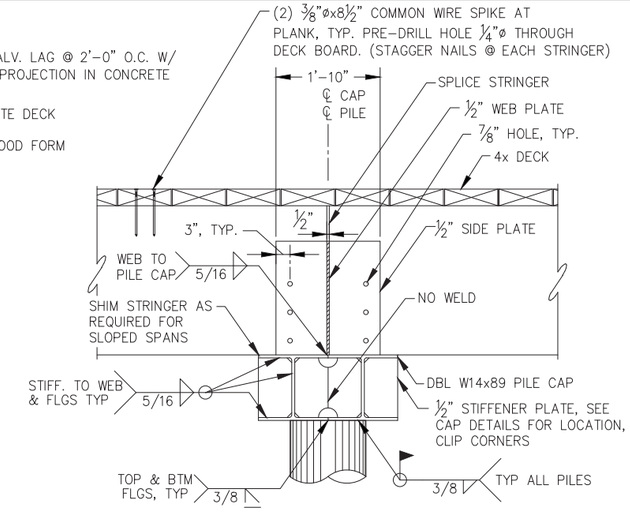

D - TYPICAL PILE CAP DETAIL AT ADA APPROACH RAMP

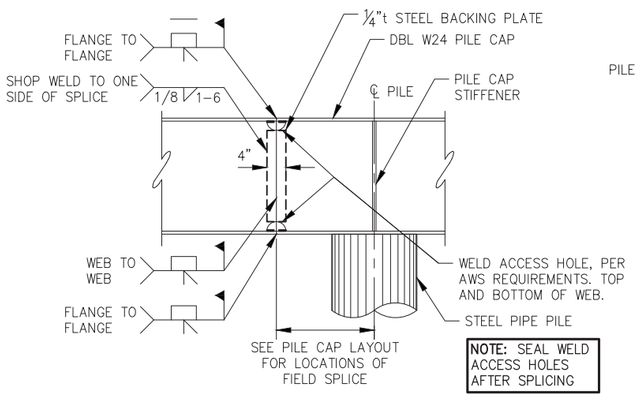

E - TYPICAL PILE CAP FIELD SPLICE DETAIL

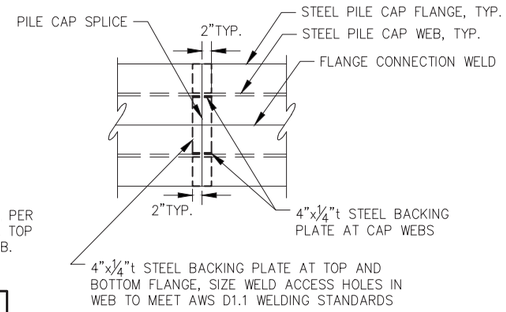

F - TYPICAL STEEL PILE CAP FIELD SPLICE DETAIL

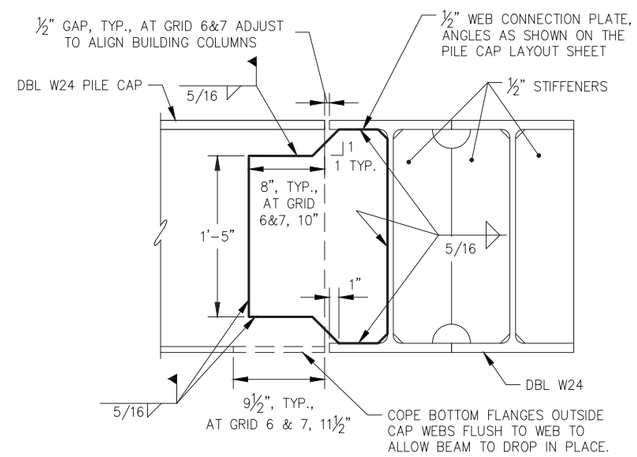

G - TYPICAL PILE CAP CONNECTION DETAIL

NOTE: END PL NOT REQUIRED AT PILE CAP TO PILE CAP CONNECTIONS.

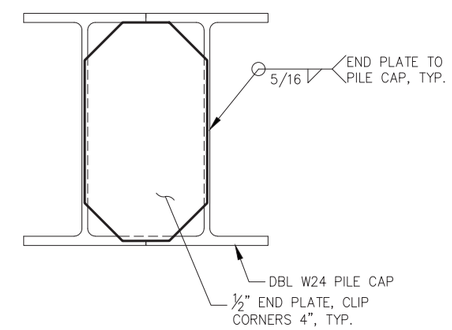

H - TYPICAL PILE END PLATE DETAIL AT DBL W24 PILE CAPS

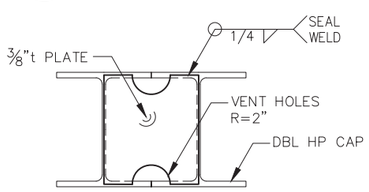

I - PILE CAP END PLATE FOR DOUBLE HP PILE CAPS

REVISIONS

REV.	DATE	DESCRIPTION	DWN.	CKD.	APP.

PND ENGINEERS, INC.
9360 Glacier Highway Ste 100
Juneau, Alaska 99801
Phone: 907-586-2093
Fax: 907-586-2099
www.pndengineers.com

DESIGN: MDS CHECKED: CRS
DRAWN: KLL APPROVED: CRS
SCALE: NTS

STATE OF ALASKA 49TH Charles R. Somerville CE-8845 REGISTERED PROFESSIONAL ENGINEER
DATE: 5/23/2019

DOWNTOWN WATERFRONT IMPROVEMENTS PHASE I
CBJ CONTRACT NO. DH19-014

SHEET TITLE:
TYPICAL DOCK FRAMING DETAILS

S1.05

PND PROJECT NO.: 182045 C.A.N. NO.: AECC250

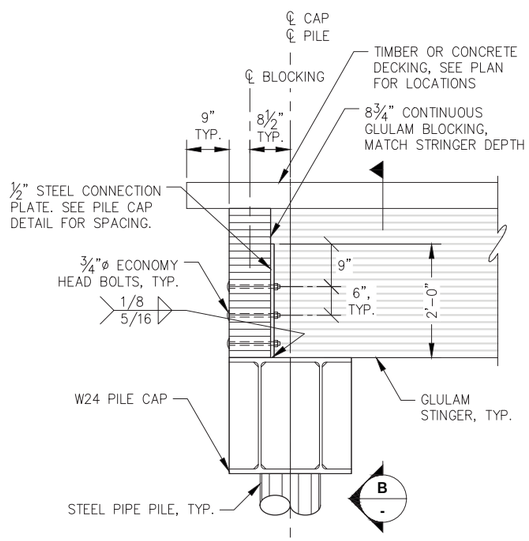

A - TYPICAL BLOCKING CONNECTION PLATE AT GRID G PILE CAP

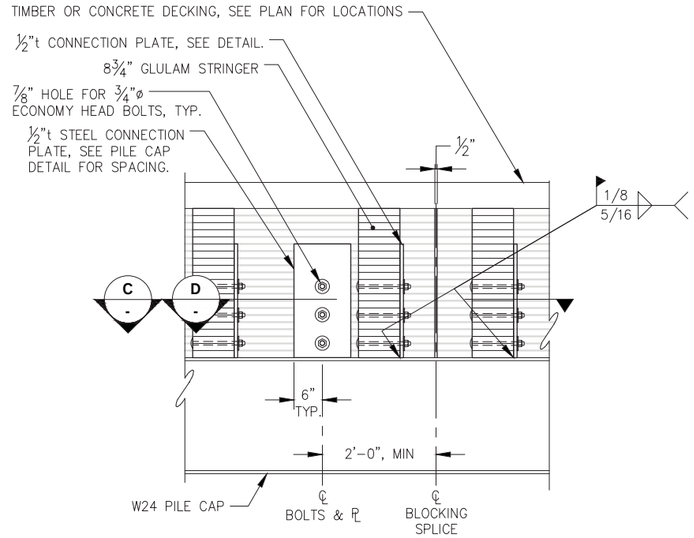

B - TYPICAL STRINGER CONNECTION ELEVATION AT DIAGONAL GLULAM BLOCKING

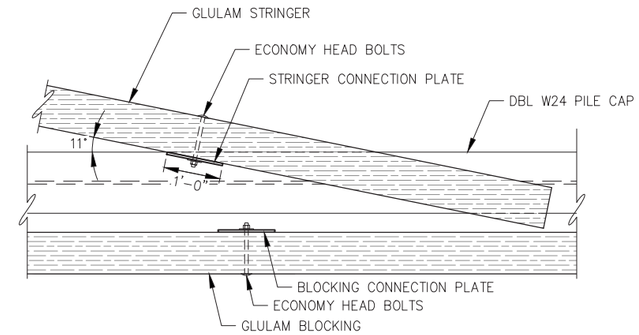

C - TYPICAL ANGLE CONNECTION PLATE AT CONTINUOUS GLULAM BLOCKING TYPE 1 (11°)

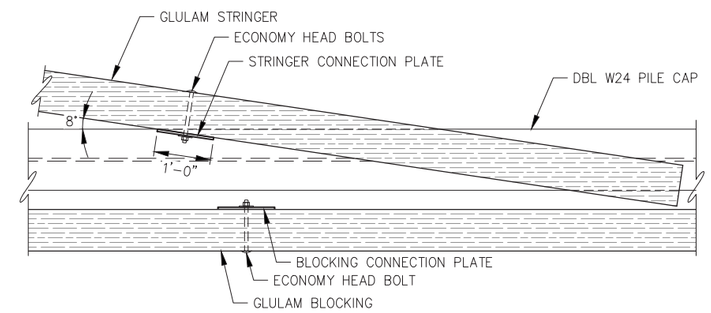

D - TYPICAL ANGLE CONNECTION PLATE AT CONTINUOUS GLULAM BLOCKING TYPE 2 (8°)

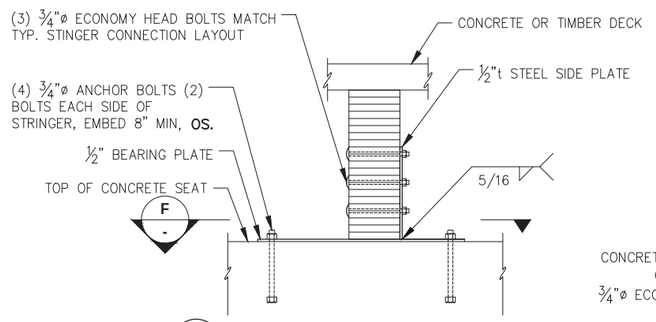

E - STRINGER TO CONCRETE WALL CONNECTION SECTION

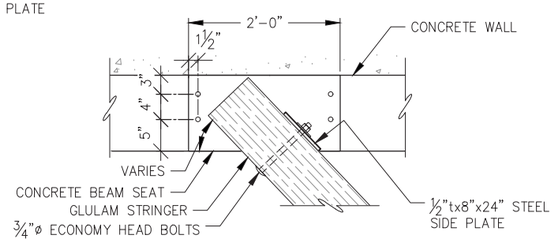

F - STRINGER TO CONCRETE WALL CONNECTION PLAN

REVISIONS

REV.	DATE	DESCRIPTION	DWN.	CKD.	APP.

PND ENGINEERS, INC.
9360 Glacier Highway Ste 100
Juneau, Alaska 99801
Phone: 907-586-2093
Fax: 907-586-2099
www.pndengineers.com

DESIGN: MDS CHECKED: CRS
DRAWN: KLL APPROVED: CRS
SCALE: NTS

STATE OF ALASKA 49TH Charles R. Somerville CE-8845 REGISTERED PROFESSIONAL ENGINEER
DATE: 5/23/2019

DOWNTOWN WATERFRONT IMPROVEMENTS PHASE I
CBJ CONTRACT NO. DH19-014

SHEET TITLE:
TYPICAL DOCK FRAMING DETAILS

PND PROJECT NO.: 182045 C.A.N. NO.: AECC250

S1.06

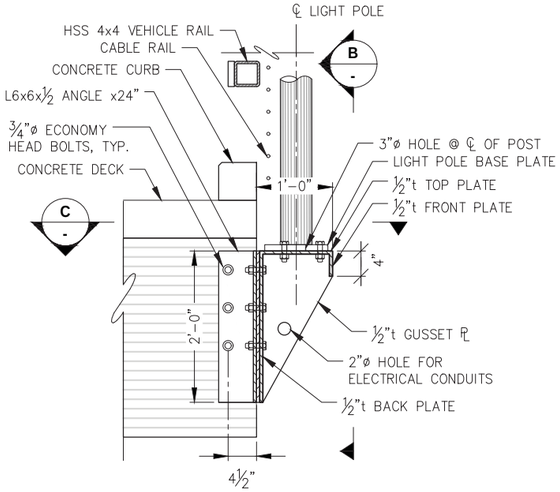

A - TYPICAL LIGHT POLE BRACKET TYPE 1 SECTION END STRINGER

(3) EACH, SEE CIVIL FOR LOCATIONS

NOTE:
USE SIMILAR BRACKET AND BOLT PATTERN FOR LIGHT POLE MOUNT @ CONCRETE RETAINING WALL, MOUNT BACK PLATE FLUSH WITH CONCRETE WALL AND EMBED ANCHOR BOLTS 8" MIN.

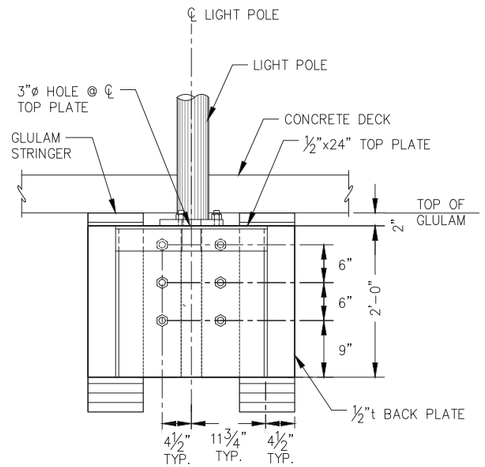

B - LIGHT POLE BRACKET DETAIL END STRINGER

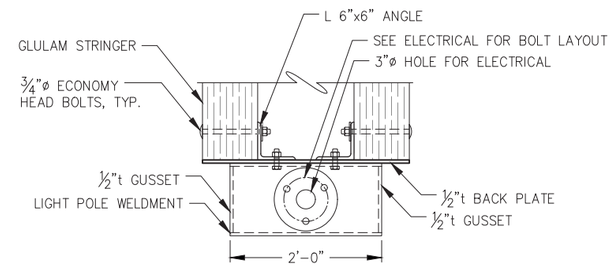

C - TYPICAL LIGHT POLE BRACKET PLAN END STRINGER

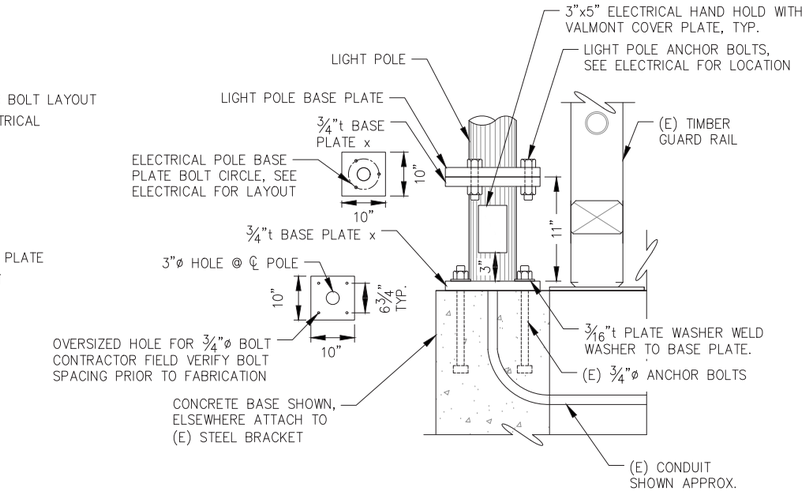

D - LIGHT POLE BRACKET TYPE 2 EXTENSION

(13) EACH, SEE ELECTRICAL FOR LOCATIONS

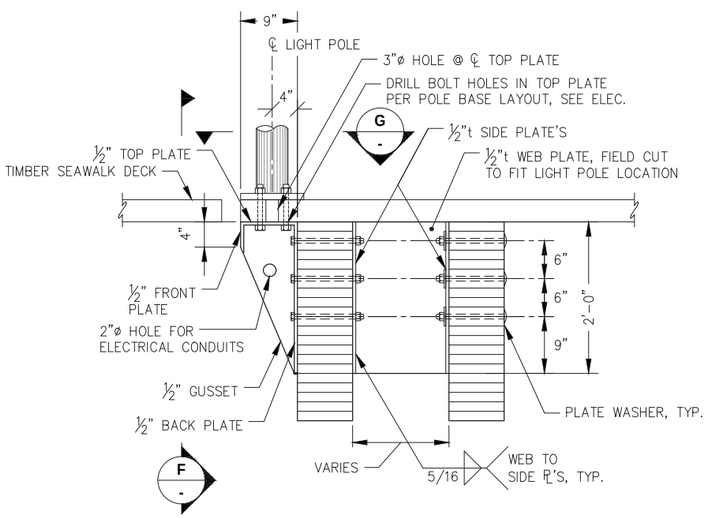

E - LIGHT POLE BRACKET TYPE 3 DETAIL STRINGER SIDE MOUNT

(6) EACH, SEE CIVIL FOR LOCATIONS

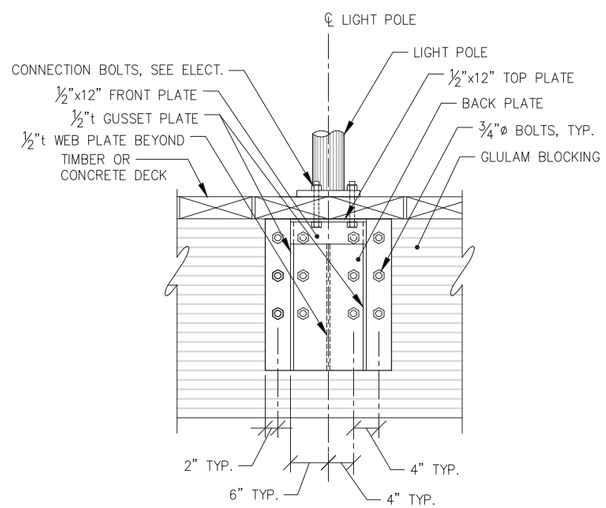

F - TYPICAL LIGHT POLE BRACKET SECTION STRINGER SIDE MOUNT

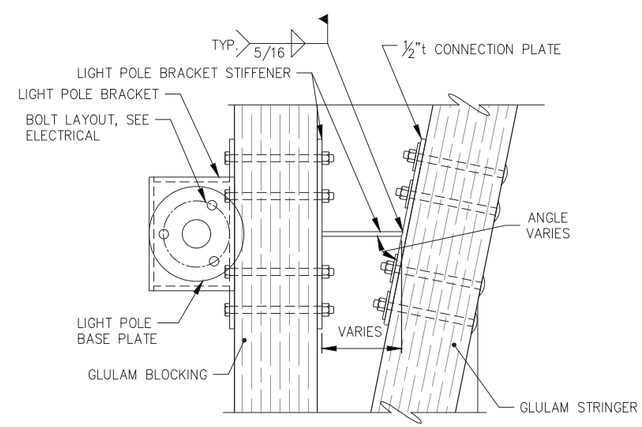

G - TYPICAL LIGHT POLE BRACKET STRINGER

REVISIONS

REV.	DATE	DESCRIPTION	DWN.	CKD.	APP.

PND ENGINEERS, INC.
9360 Glacier Highway Ste 100
Juneau, Alaska 99801
Phone: 907-586-2093
Fax: 907-586-2099
www.pndengineers.com

DESIGN: MDS CHECKED: CRS
DRAWN: KLL APPROVED: CRS
SCALE: NTS

STATE OF ALASKA 49TH Charles R. Somerville CE-8845 REGISTERED PROFESSIONAL ENGINEER
DATE: 5/23/2019

DOWNTOWN WATERFRONT IMPROVEMENTS PHASE I
CBJ CONTRACT NO. DH19-014

SHEET TITLE:
LIGHT POLE TYPICAL DETAILS

PND PROJECT NO.: 182045 C.A.N. NO.: AECC250

S1.07

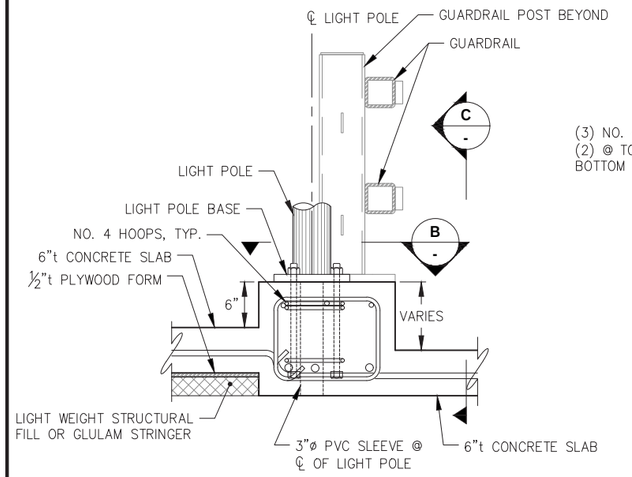

A - LIGHT POLE BRACKET TYPE 4 SECTION ON CURB

(2) REQUIRED SEE CIVIL FOR LOCATION

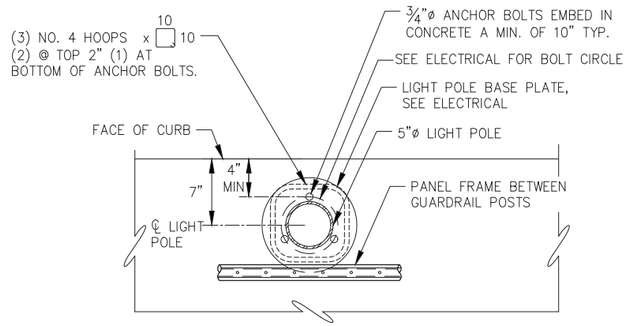

B - LIGHT POLE BRACKET PARTIAL PLAN AT CURB

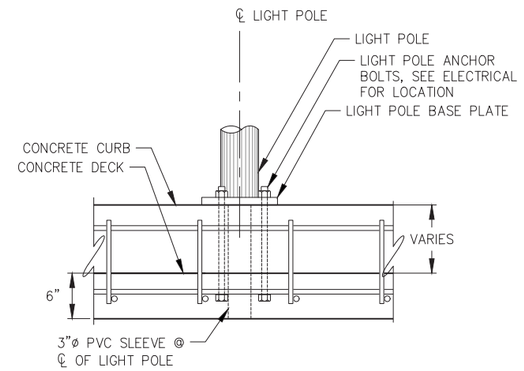

C - LIGHT POLE BRACKET DETAIL ON CONCRETE CURB

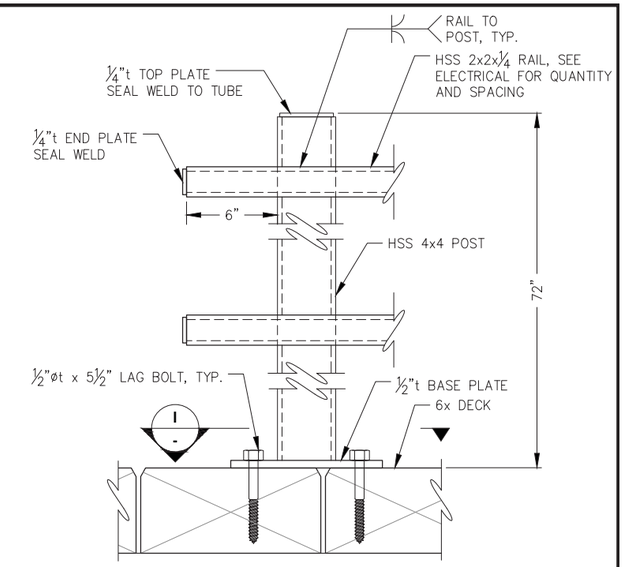

D - TYPICAL ELECTRICAL RACK POST ELEVATION

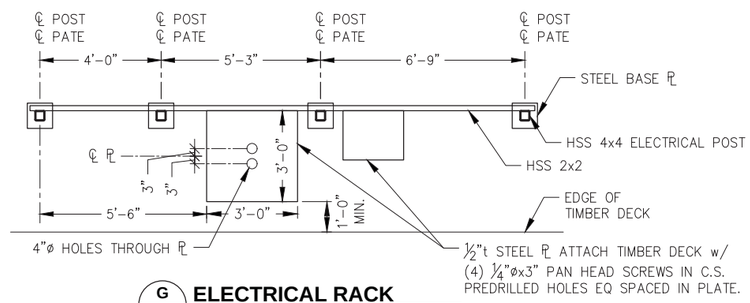

G - ELECTRICAL RACK PARTIAL FRAMING PLAN

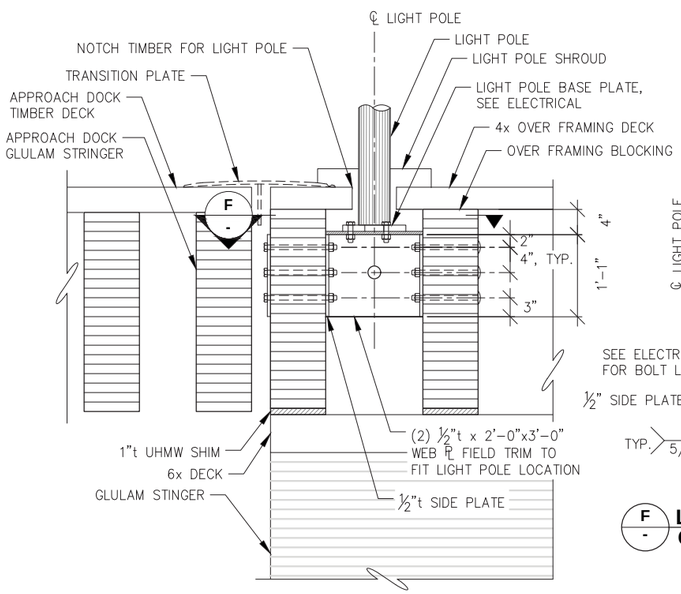

E - LIGHT POLE BRACKET TYPE 5 DOCK AND OVERFRAMING

(1) REQUIRED SEE CIVIL FOR LOCATION

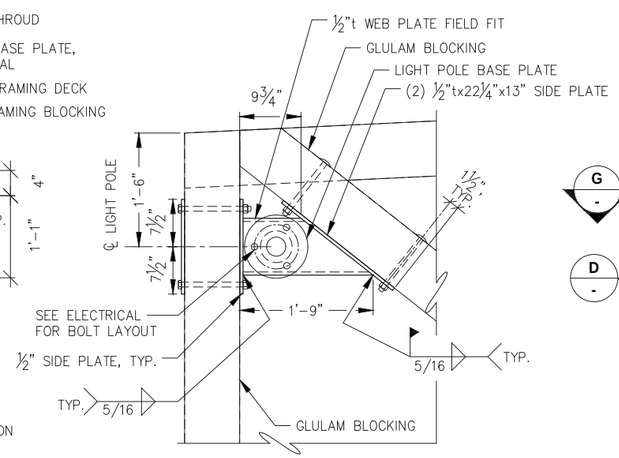

F - LIGHT POLE CONNECTION DETAIL AT OVER FRAMING AND APPROACH DOCK

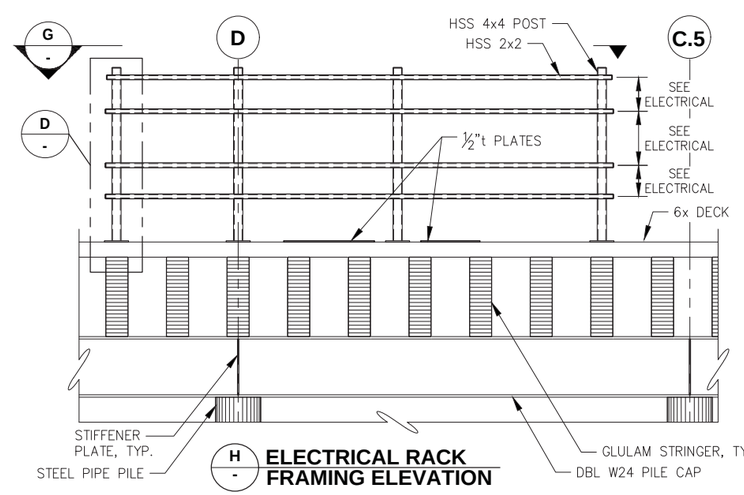

H - ELECTRICAL RACK FRAMING ELEVATION

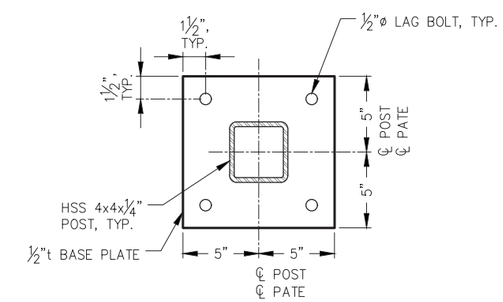

I - ELECTRICAL RACK BASE PLATE

REVISIONS

REV.	DATE	DESCRIPTION	DWN.	CKD.	APP.

PND ENGINEERS, INC.
9360 Glacier Highway Ste 100
Juneau, Alaska 99801
Phone: 907-586-2093
Fax: 907-586-2099
www.pndengineers.com

DESIGN: MDS CHECKED: CRS
DRAWN: KLL APPROVED: CRS
SCALE: NTS

STATE OF ALASKA 49TH Charles R. Somerville CE-8845 REGISTERED PROFESSIONAL ENGINEER
DATE: 5/23/2019

DOWNTOWN WATERFRONT IMPROVEMENTS PHASE I
CBJ CONTRACT NO. DH19-014

SHEET TITLE: **LIGHT POLE TYPICAL DETAILS**

PND PROJECT NO.: 182045 C.A.N. NO.: AECC250

S1.08

WALL LAYOUT AND ELEVATIONS

POINT	NORTHING	EASTING	ELEV. FINISHED GRADE	DESCRIPTION
1	2361822.39	2544111.55	28.52	OUTSIDE FACE OF WALL AT END
2	2361816.99	2544103.94	28.52	℄ PILE
3	2361734.44	2544158.68	28.52	℄ PILE
4	2361724.07	2544202.55	28.52	OUTSIDE FACE OF WALL AT ANGLE POINT
5	2361701.39	2544218.78	28.52	℄ PILE
6	2361687.18	2544288.97	28.52	℄ PILE
7	2361592.70	2544348.24	27.17	℄ PILE
8	2361600.84	2544365.92	27.17	OUTSIDE FACE OF WALL AT END

NOTE:
FINISHED GRADE= TOP OF SLAB/TIMBER DECK AT ℄ CONCRETE WALL.

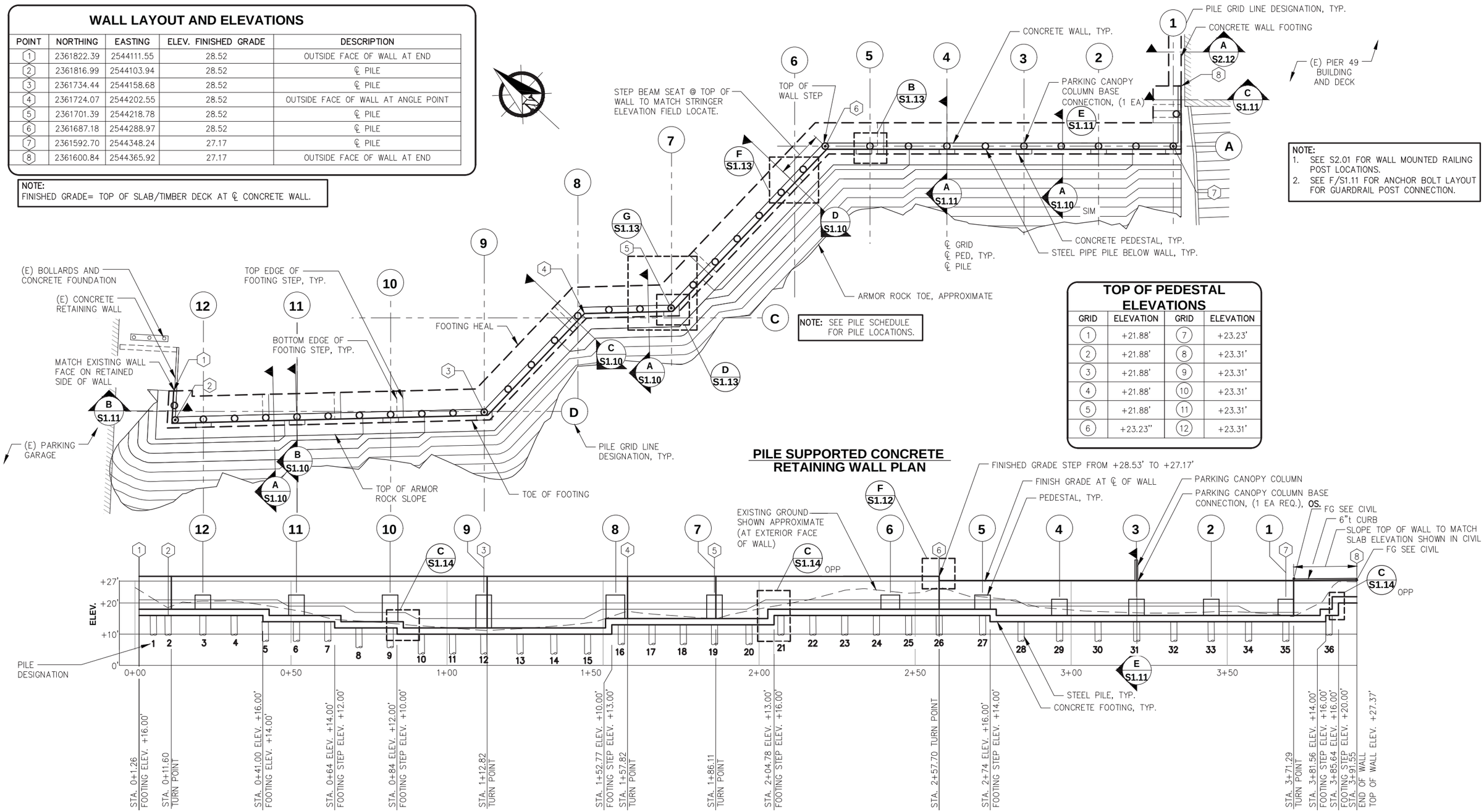

NOTE:
1. SEE S2.01 FOR WALL MOUNTED RAILING POST LOCATIONS.
2. SEE F/S1.11 FOR ANCHOR BOLT LAYOUT FOR GUARDRAIL POST CONNECTION.

NOTE: SEE PILE SCHEDULE FOR PILE LOCATIONS.

TOP OF PEDESTAL ELEVATIONS

GRID	ELEVATION	GRID	ELEVATION
1	+21.88'	7	+23.23'
2	+21.88'	8	+23.31'
3	+21.88'	9	+23.31'
4	+21.88'	10	+23.31'
5	+21.88'	11	+23.31'
6	+23.23''	12	+23.31'

PILE SUPPORTED CONCRETE RETAINING WALL PLAN

RETAINING WALL PROFILE

NOTE:
1. STATIONING IS AT SEAWARD FACE OF WALL
2. TOP OF CONCRETE WALL = COORDINATE FINISH GRADE WITH CIVIL PLANS, SLAB AND TIMBER DECKS NOT SHOWN FOR CLARITY
3. STA. FOOTING ELEVATIONS = BOTTOM OF FOOTING ELEVATION.

NOTE: OS INDICATES OWNER SUPPLIED MATERIALS

CITY & BOROUGH OF JUNEAU — DOCKS & HARBORS

REVISIONS

REV.	DATE	DESCRIPTION	DWN.	CKD.	APP.

PND ENGINEERS, INC.
9360 Glacier Highway Ste 100
Juneau, Alaska 99801
Phone: 907-586-2093
Fax: 907-586-2099
www.pndengineers.com

DESIGN: MDS CHECKED: CRS
DRAWN: KLL APPROVED: CRS
SCALE: SCALE IN FEET 0 15 30 FT.

STATE OF ALASKA 49TH — Charles R. Somerville CE-8845 — REGISTERED PROFESSIONAL ENGINEER
DATE: 5/23/2019

DOWNTOWN WATERFRONT IMPROVEMENTS PHASE I
CBJ CONTRACT NO. DH19-014

SHEET TITLE:
CONCRETE RETAINING WALL PLAN AND PROFILE

PND PROJECT NO.: 182045 C.A.N. NO.: AECC250

S1.09

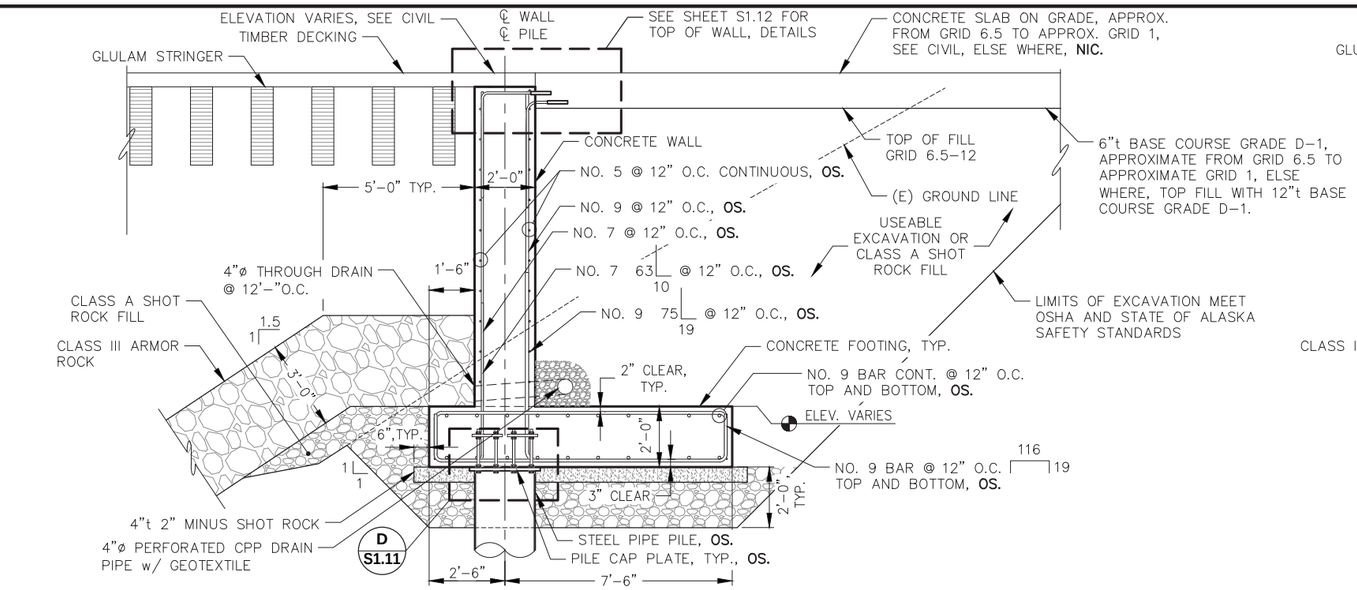

A S1.09 **TYPICAL RETAINING WALL SECTION**

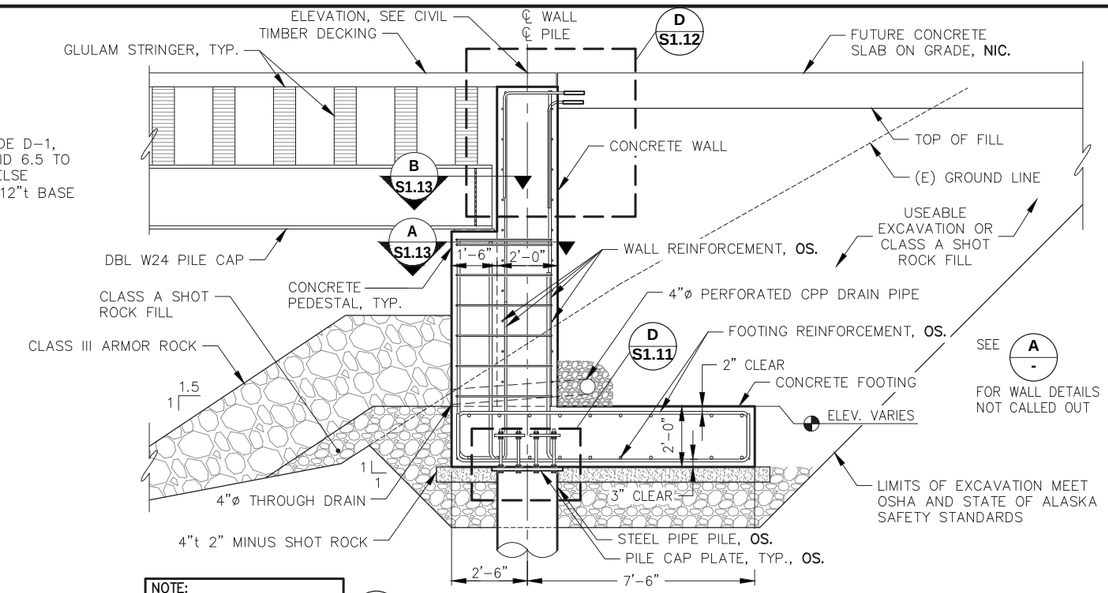

NOTE:
1. PEDESTAL ANCHOR BOLTS NOT SHOWN.
2. SEE SHEET S1.13 FOR PEDESTAL DETAILS NOT CALLED OUT

B S1.09 **RETAINING WALL SECTION WITH PEDESTAL**

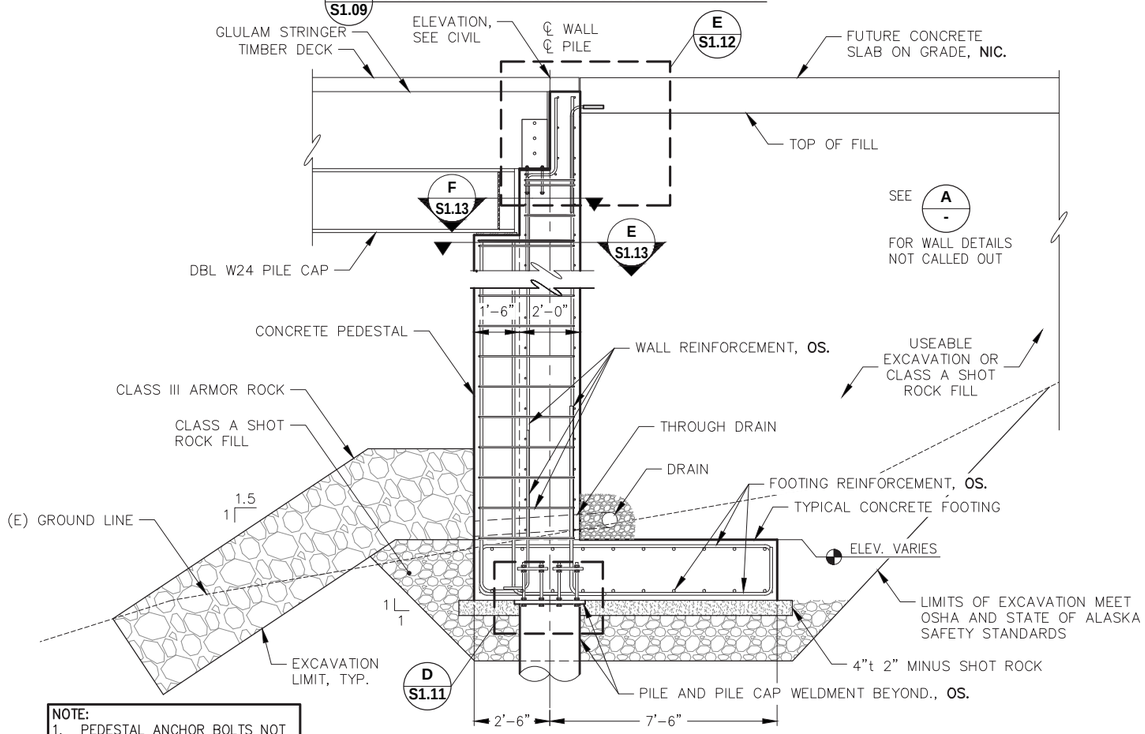

NOTE:
1. PEDESTAL ANCHOR BOLTS NOT SHOWN.
2. SEE SHEET S1.13 FOR PEDESTAL DETAILS NOT CALLED OUT

C S1.09 **RETAINING WALL SECTION WITH PEDESTAL**

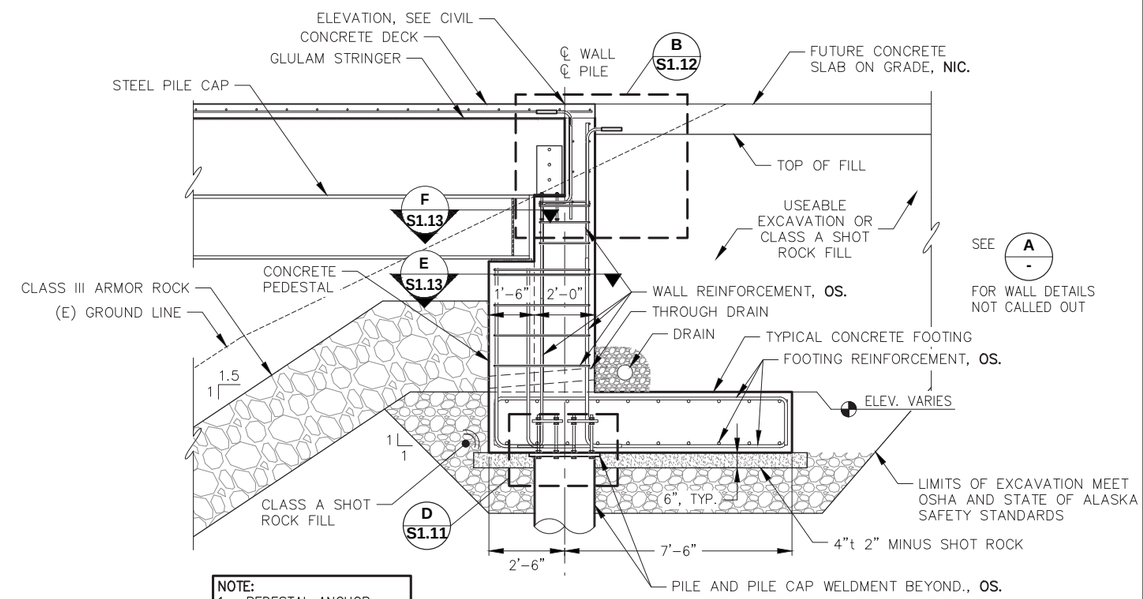

NOTE:
1. PEDESTAL ANCHOR BOLTS NOT SHOWN.
2. SEE SHEET S1.13 FOR PEDESTAL DETAILS NOT CALLED OUT

D S1.09 **RETAINING WALL SECTION WITH PEDESTAL**

NOTE: OS. INDICATES OWNER SUPPLIED MATERIALS

CITY & BOROUGH OF JUNEAU — DOCKS & HARBORS

REVISIONS

REV.	DATE	DESCRIPTION	DWN.	CKD.	APP.

PND ENGINEERS, INC.
9360 Glacier Highway Ste 100
Juneau, Alaska 99801
Phone: 907-586-2093
Fax: 907-586-2099
www.pndengineers.com

DESIGN: MDS CHECKED: CRS
DRAWN: KLL APPROVED: CRS
SCALE: NTS

STATE OF ALASKA 49TH — Charles R. Somerville CE-8845 — REGISTERED PROFESSIONAL ENGINEER
DATE: 5/23/2019

DOWNTOWN WATERFRONT IMPROVEMENTS PHASE I
CBJ CONTRACT NO. DH19-014

SHEET TITLE: **CONCRETE RETAINING WALL SECTIONS**

PND PROJECT NO.: 182045 C.A.N. NO.: AECC250

S1.10

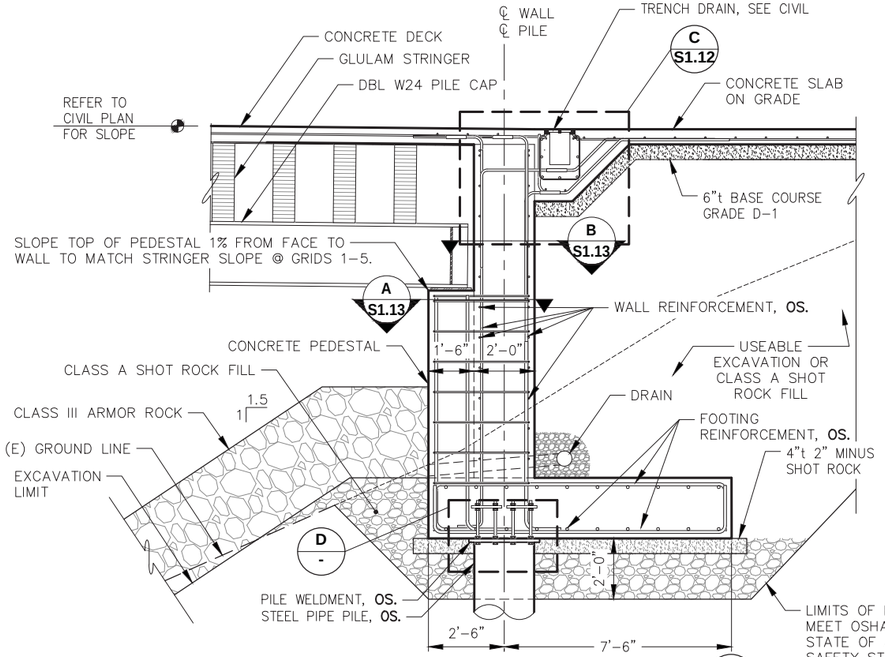

A S1.09 **RETAINING WALL SECTION**

NOTE:
1. PEDESTAL ANCHOR BOLTS NOT SHOWN.
2. SEE SHEET S1.13 FOR PEDESTAL DETAILS NOT CALLED OUT

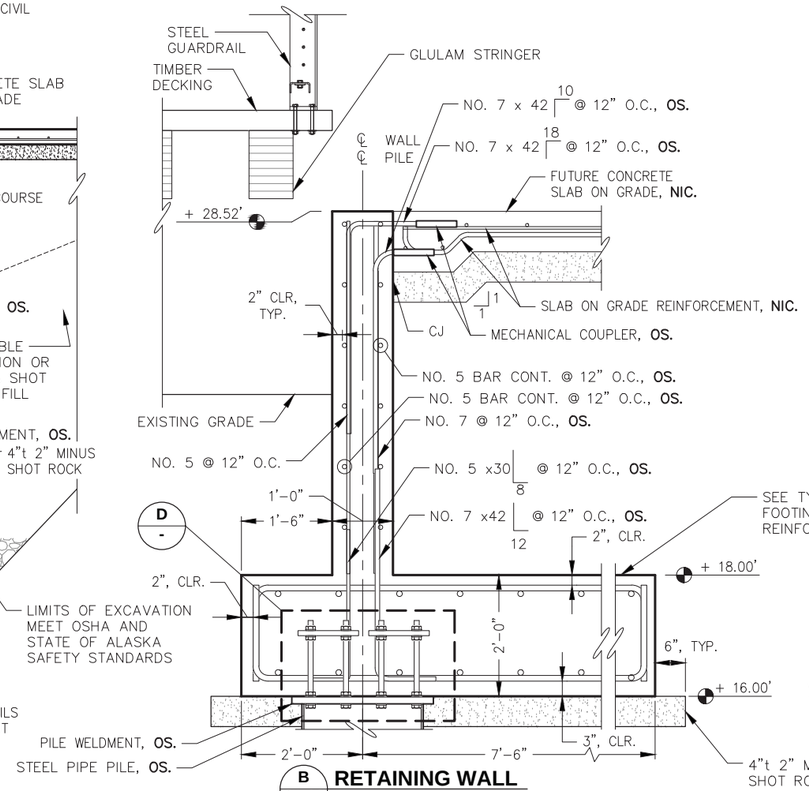

B S1.09 **RETAINING WALL SECTION**

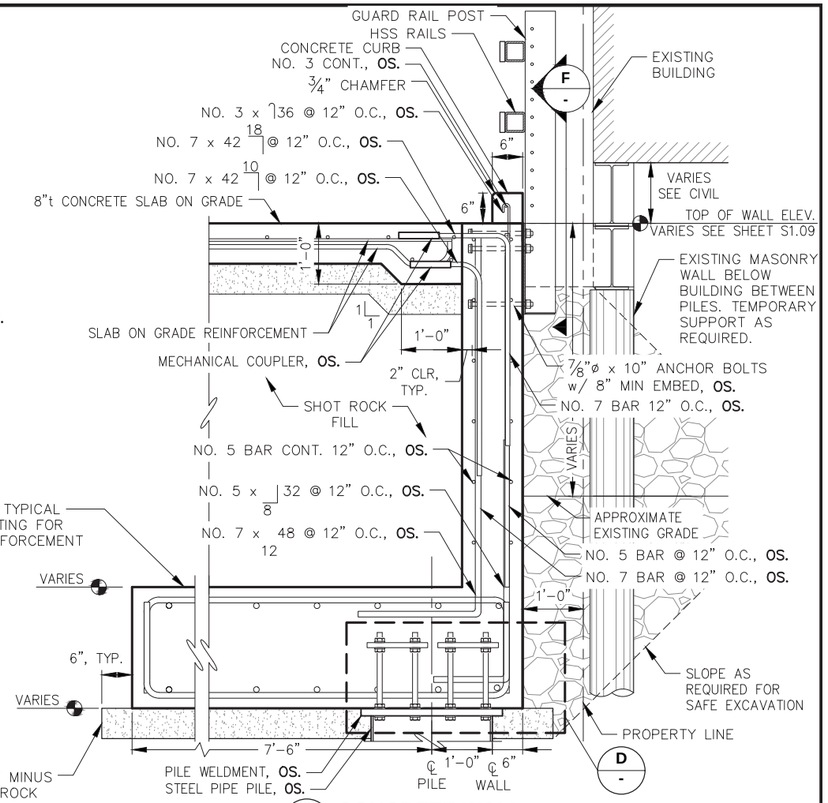

C S1.09 **CONCRETE WALL SECTION**

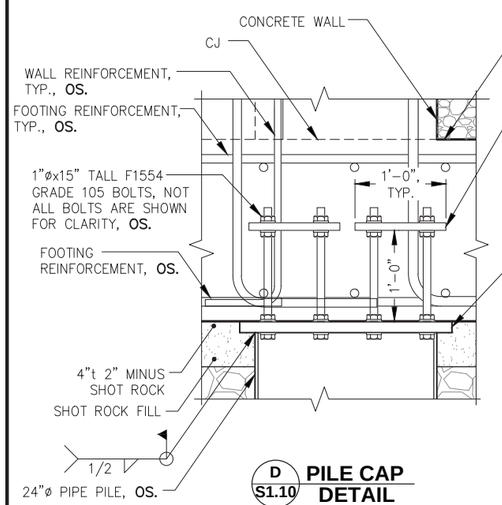

D S1.10 **PILE CAP DETAIL**

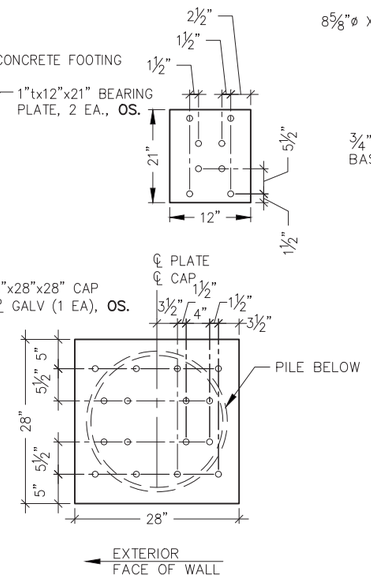

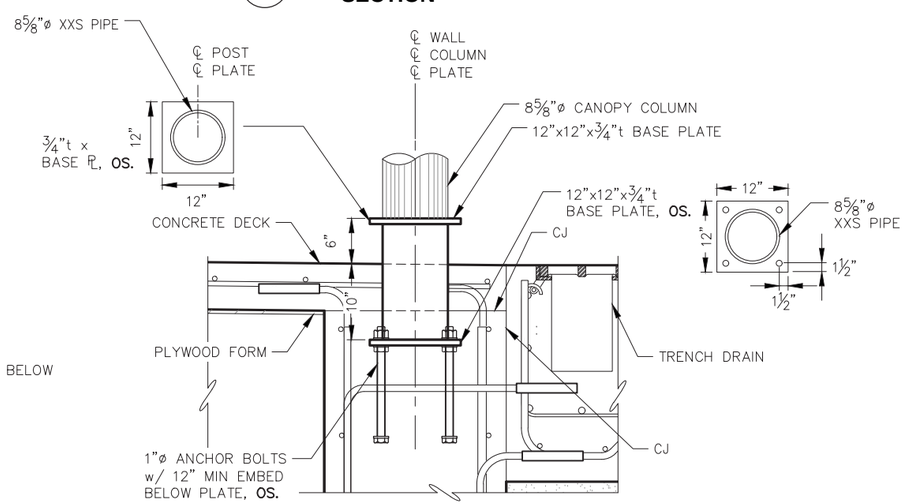

E S1.09 **CANOPY COLUMN BASE CONNECTION DETAIL** (1 EA REQ'D), OS.

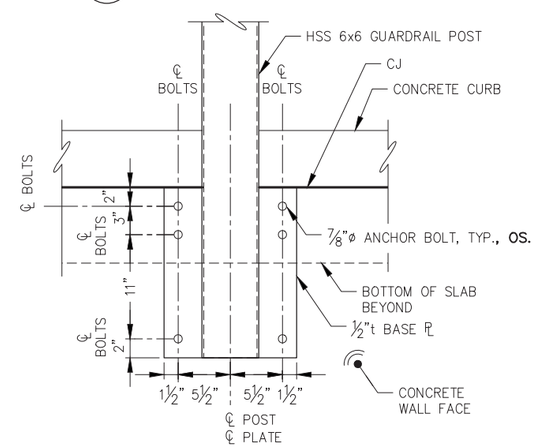

F - **VEHICLE RAIL POST CONNECTION DETAIL**

NOTE: OS. INDICATES OWNER SUPPLIED MATERIALS

REVISIONS

REV.	DATE	DESCRIPTION	DWN.	CKD.	APP.

PND ENGINEERS, INC.
9360 Glacier Highway Ste 100
Juneau, Alaska 99801
Phone: 907-586-2093
Fax: 907-586-2099
www.pndengineers.com

DESIGN: MDS CHECKED: CRS
DRAWN: KLL APPROVED: CRS
SCALE: NTS

STATE OF ALASKA 49TH Charles R. Somerville CE-8845 REGISTERED PROFESSIONAL ENGINEER
DATE: 5/23/2019

DOWNTOWN WATERFRONT IMPROVEMENTS PHASE I
CBJ CONTRACT NO. DH19-014

SHEET TITLE:
CONCRETE RETAINING WALL SECTIONS AND DETAILS

PND PROJECT NO.: 182045 C.A.N. NO.: AECC250

S1.11

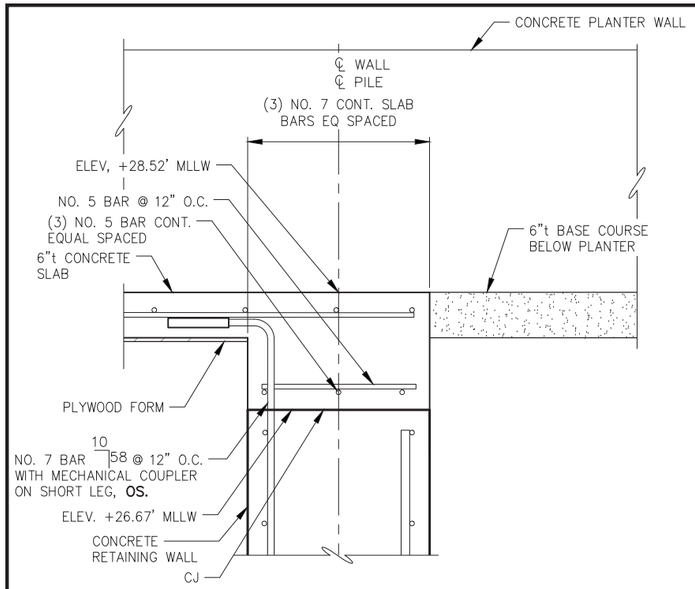

A / - TOP OF WALL CONCRETE DETAIL
STA. 2+57.70 TO STA. 2+62.16 END OF TRENCH DRAIN

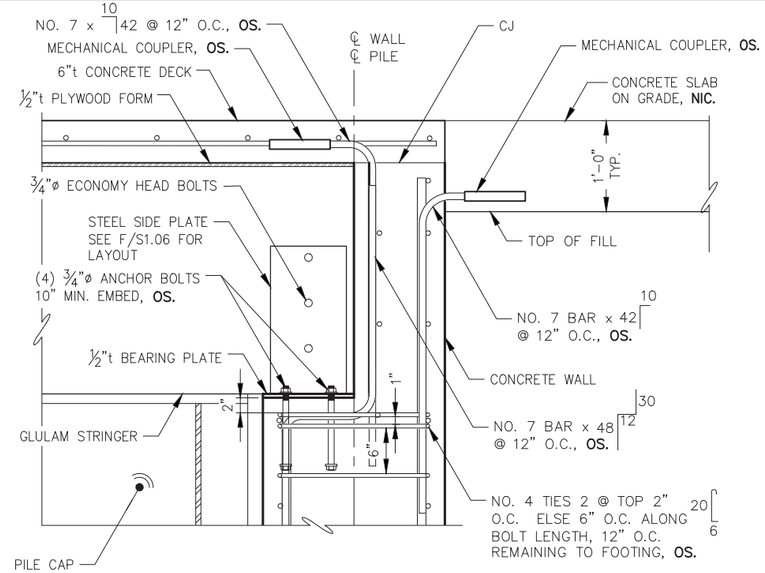

B / S1.10 TOP OF WALL DETAIL
CONCRETE DECK W/ BEAM SEAT

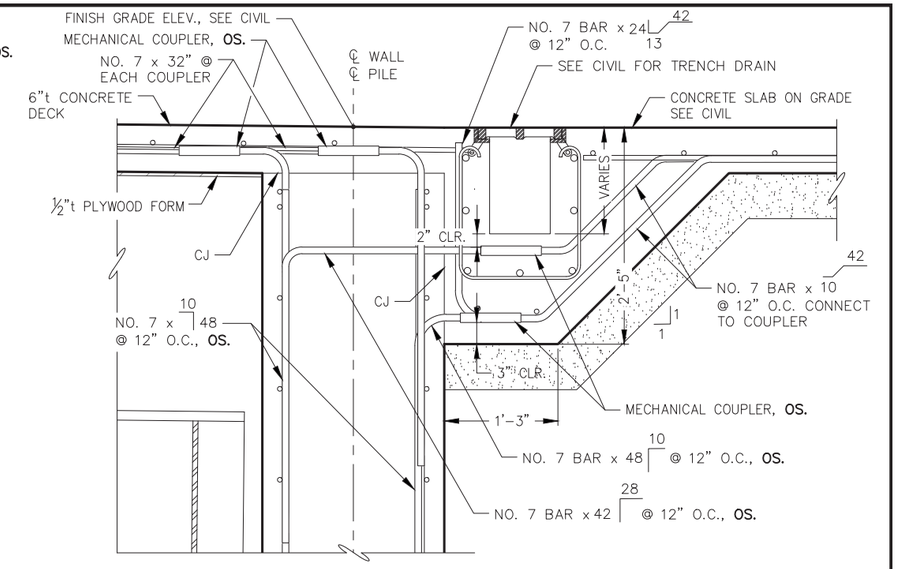

C / S1.11 TOP OF WALL DETAIL
CONCRETE DECK WITHOUT BEAM SEAT

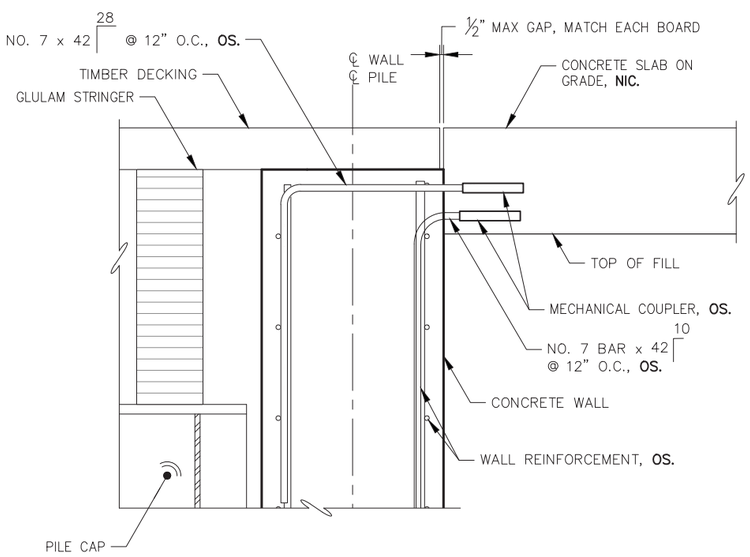

D / S1.10 TOP OF WALL DETAIL
TIMBER DECK WITHOUT BEAM SEAT

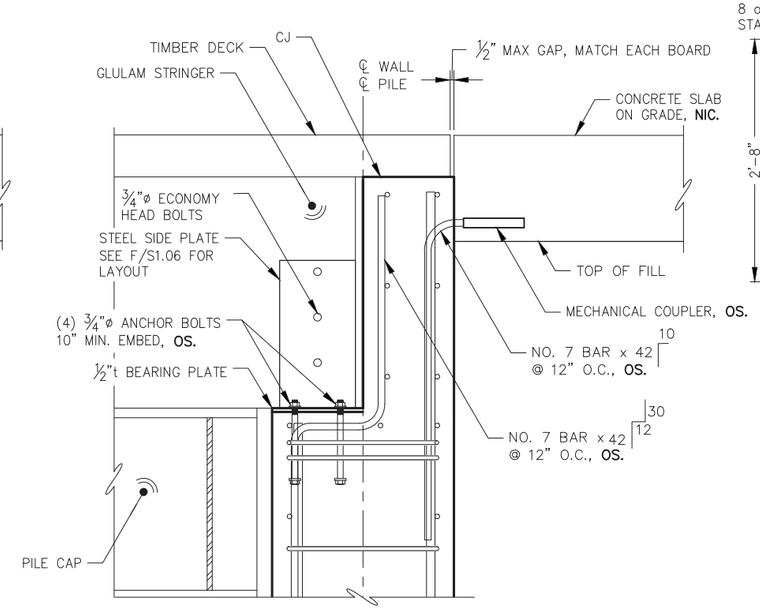

E / S1.10 TOP OF WALL DETAIL
TIMBER DECK WITH BEAM SEAT

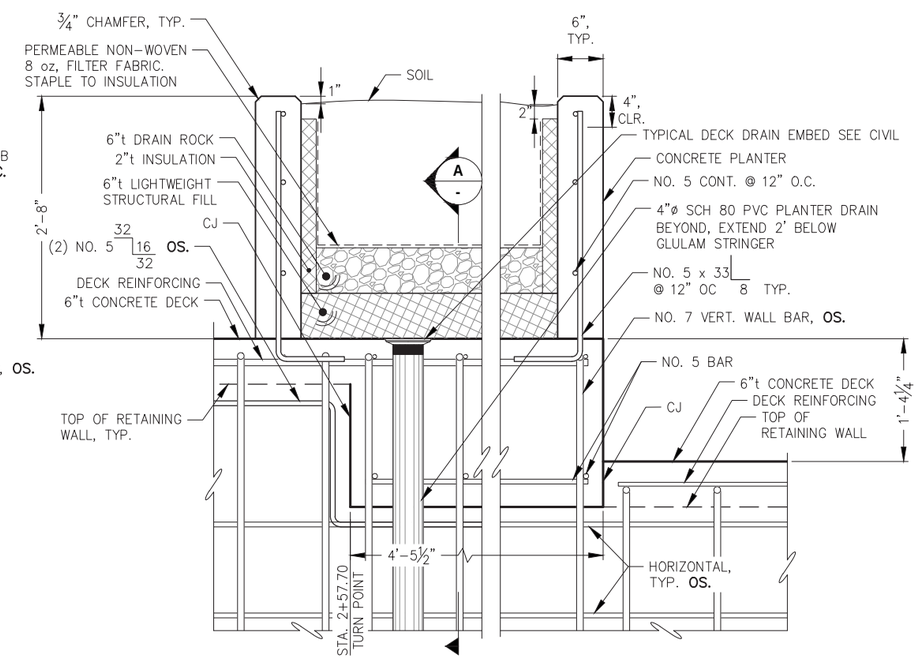

F / S1.09 TOP OF WALL STEP DETAIL
AND PLATER SECTION

NOTE: OS. INDICATES OWNER SUPPLIED MATERIALS

REVISIONS

REV.	DATE	DESCRIPTION	DWN.	CKD.	APP.

PND ENGINEERS, INC.
9360 Glacier Highway Ste 100
Juneau, Alaska 99801
Phone: 907-586-2093
Fax: 907-586-2099
www.pndengineers.com

DESIGN: MDS CHECKED: CRS
DRAWN: KLL APPROVED: CRS
SCALE: NTS

STATE OF ALASKA 49TH Charles R. Somerville CE-8845 REGISTERED PROFESSIONAL ENGINEER
DATE: 5/23/2019

DOWNTOWN WATERFRONT IMPROVEMENTS PHASE I
CBJ CONTRACT NO. DH19-014

SHEET TITLE:
CONCRETE RETAINING WALL DETAILS

PND PROJECT NO.: 182045 C.A.N. NO.: AECC250

S1.12

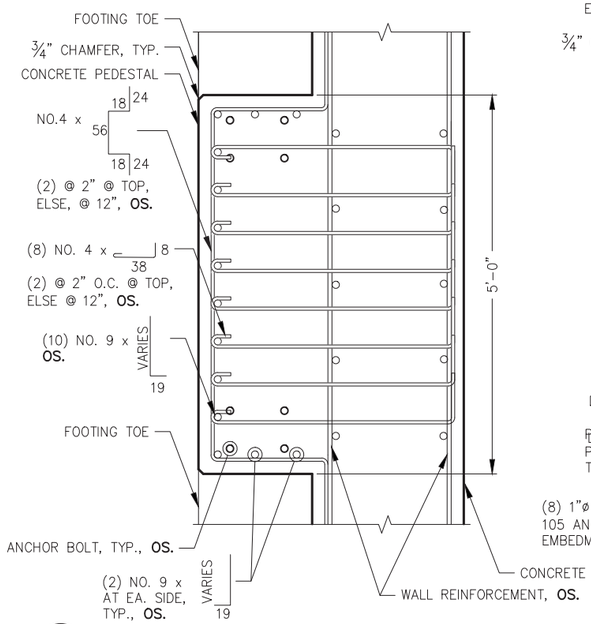

A S1.10 **TYPICAL PILE CAP SUPPORT PEDESTAL**

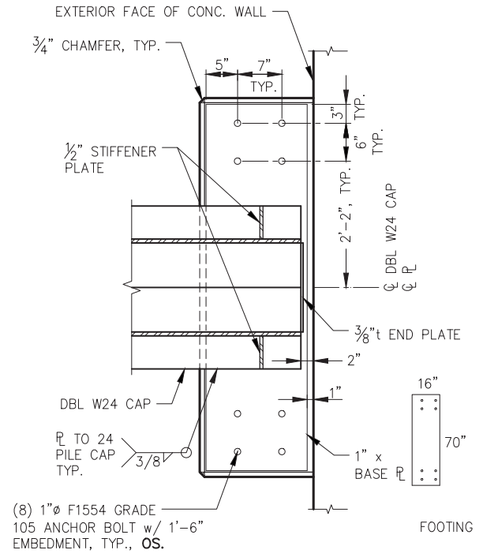

B S1.09 S1.10 **PILE CAP BASE PLATE**

NOTE: PILE CAP ANGLE TO ℄ OF PEDESTAL = ±2° FROM PERPENDICULAR TO THE PEDESTAL

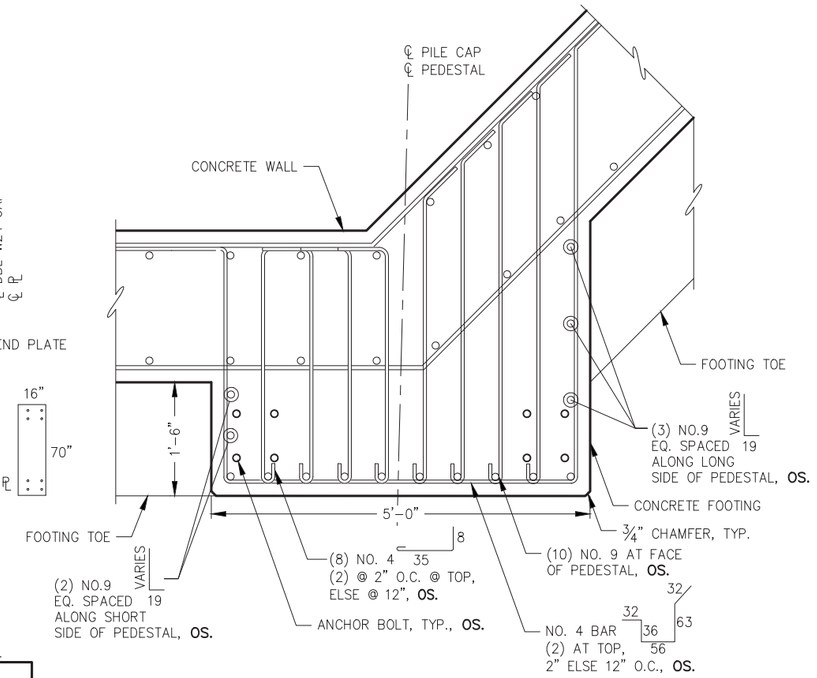

C S1.09 **PILE CAP SUPPORT PEDESTAL AT WALL TURNING POINT**

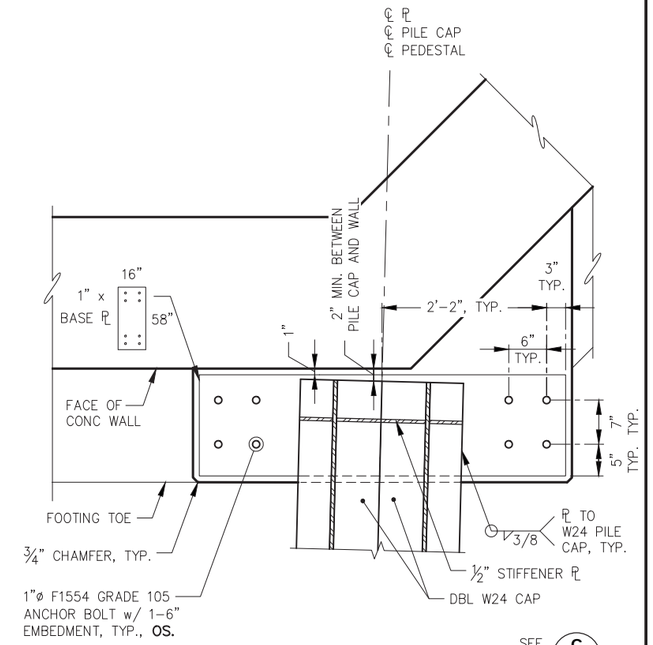

D S1.09 **PILE CAP BASE PLATE AT WALL TURNING POINT**

SEE C - FOR PEDESTAL REINFORCEMENT

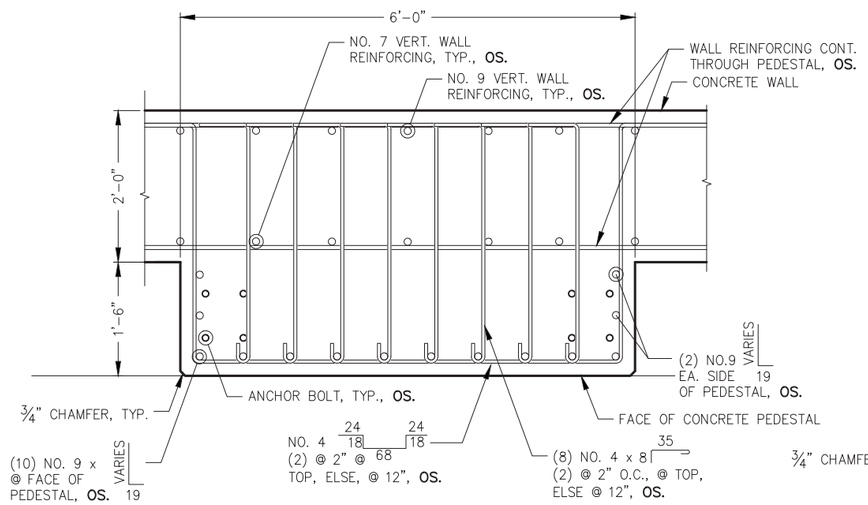

E S1.10 **PILE CAP SUPPORT PEDESTAL AT ANGLED WALL**

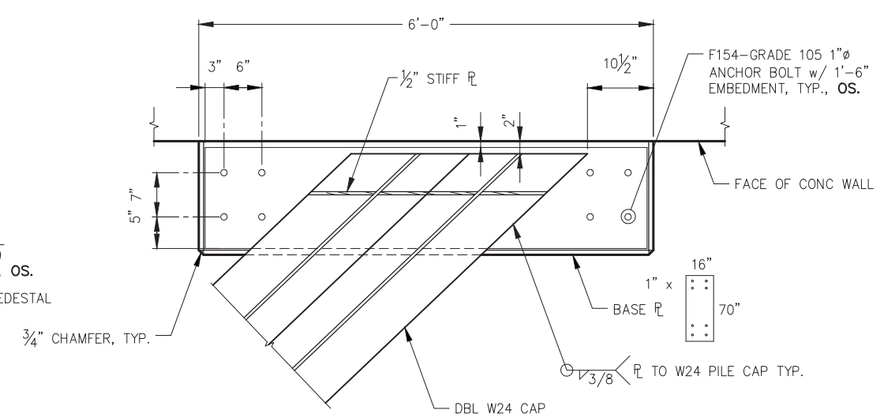

F S1.09 S1.10 **PILE CAP BASE PLATE**

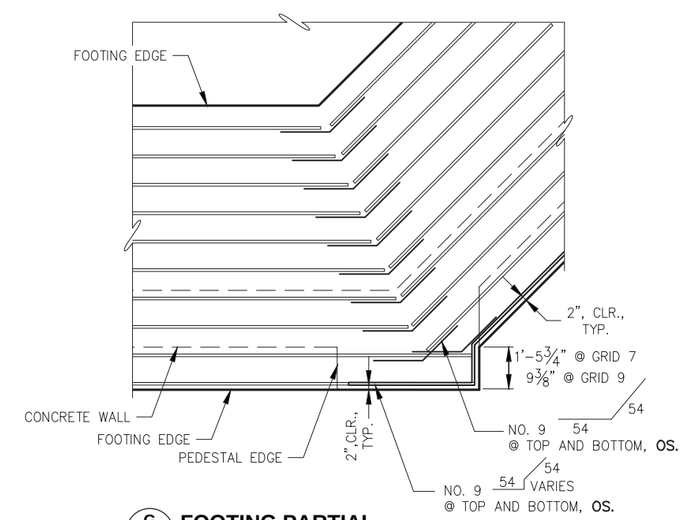

G S1.09 **FOOTING PARTIAL PLAN AT ANGLE POINT PEDESTALS**

NOTE: OS. INDICATES OWNER SUPPLIED MATERIALS

REVISIONS

REV.	DATE	DESCRIPTION	DWN.	CKD.	APP.

P N D ENGINEERS, INC.
9360 Glacier Highway Ste 100
Juneau, Alaska 99801
Phone: 907-586-2093
Fax: 907-586-2099
www.pndengineers.com

DESIGN: MDS CHECKED: CRS
DRAWN: KLL APPROVED: CRS
SCALE: NTS

STATE OF ALASKA 49TH Charles R. Somerville CE-8845 REGISTERED PROFESSIONAL ENGINEER
DATE: 5/23/2019

DOWNTOWN WATERFRONT IMPROVEMENTS PHASE I
CBJ CONTRACT NO. DH19-014

SHEET TITLE:
CONCRETE RETAINING WALL PEDESTAL DETAILS

PND PROJECT NO.: 182045 C.A.N. NO.: AECC250

S1.13

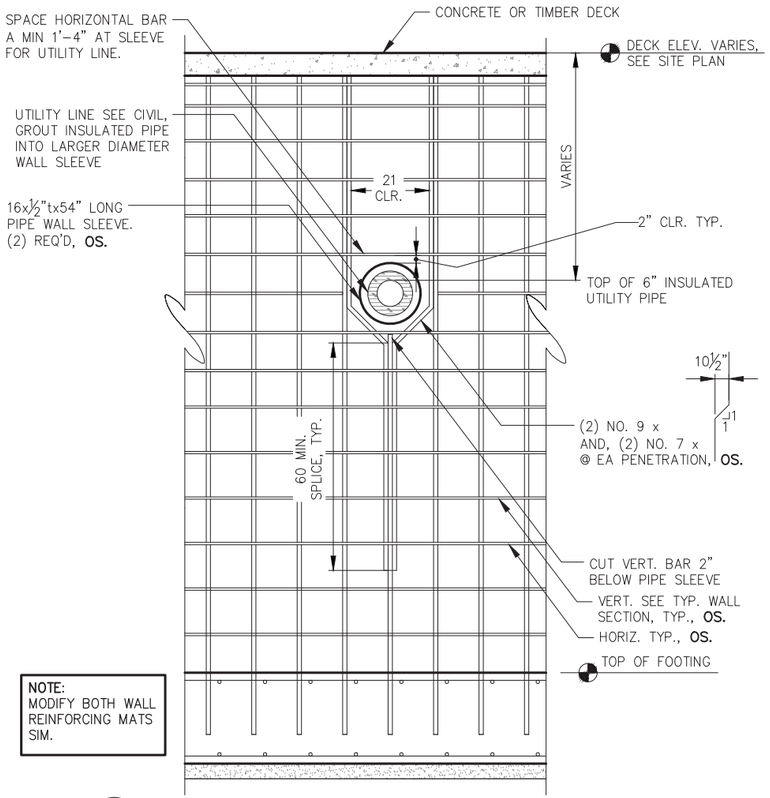

NOTE:
MODIFY BOTH WALL REINFORCING MATS SIM.

A / - TYPICAL WALL PENETRATION REBAR LAYOUT FOR PENETRATIONS 16" DIA.

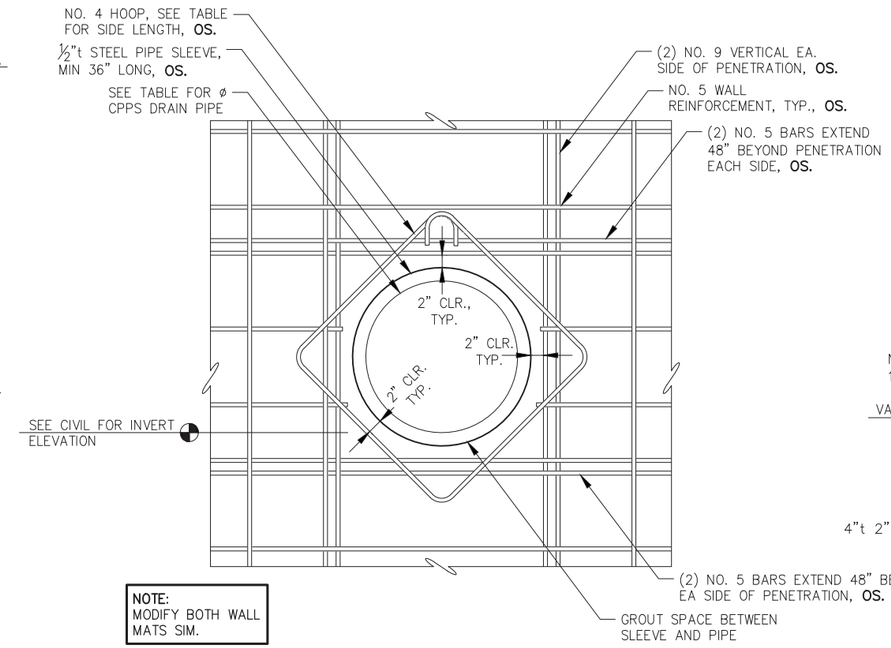

NOTE:
MODIFY BOTH WALL MATS SIM.

B / - TYPICAL WALL PENETRATION REBAR LAYOUT FOR PENETRATIONS GREATER THAN 16" DIA

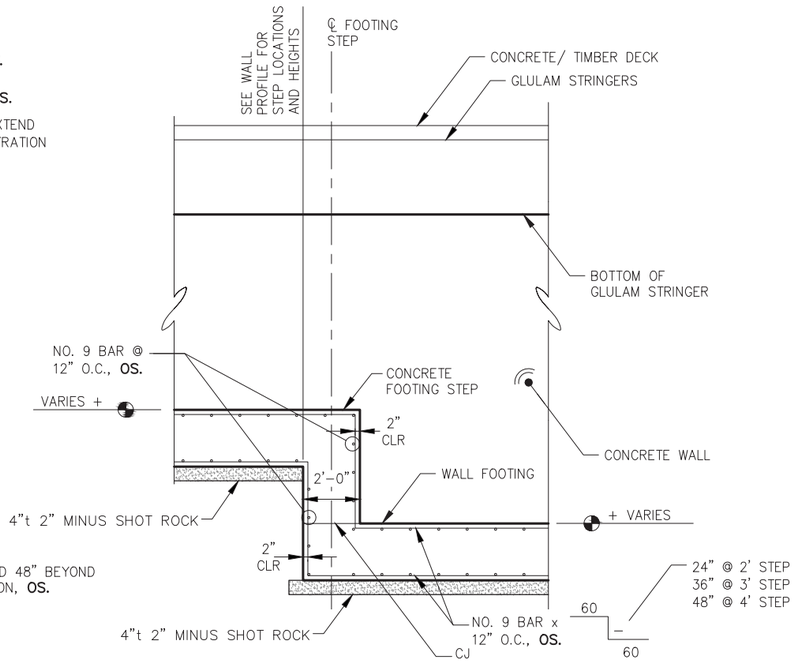

C / S1.09 TYPICAL FOOTING STEP

NOTE:

PIPE Ø	PIPE OD	SLEEVE OD	HOOP DIAMETER	QUANTITY REQ'D
24"	28.2"	30"	34"x34"	1
18"	21.8"	24"	28"x28"	1

NOTE:
1. COORDINATE w/ ELECTRICAL FOR CONDUIT PENETRATIONS.
2. SLEEVE ELECTRICAL CONDUITS w/ 4"ø PVC SCHEDULE 40 PIPE. ANGLE PIPE THOUGH WALL TO MATCH CONDUIT ANGLE. MAINTAIN A MINIMUM OF 1.5" OF CONCRETE COVER BETWEEN SLEEVE AND REINFORCEMENT.

NOTE: OS. INDICATES OWNER SUPPLIED MATERIALS

CITY & BOROUGH OF JUNEAU DOCKS & HARBORS

REVISIONS

REV.	DATE	DESCRIPTION	DWN.	CKD.	APP.

PND ENGINEERS, INC.
9360 Glacier Highway Ste 100
Juneau, Alaska 99801
Phone: 907-586-2093
Fax: 907-586-2099
www.pndengineers.com

DESIGN: MDS CHECKED: CRS
DRAWN: KLL APPROVED: CRS
SCALE: NTS

STATE OF ALASKA 49TH Charles R. Somerville CE-8845 REGISTERED PROFESSIONAL ENGINEER
DATE: 5/23/2019

DOWNTOWN WATERFRONT IMPROVEMENTS PHASE I
CBJ CONTRACT NO. DH19-014

SHEET TITLE:
CONCRETE RETAINING WALL DETAILS

PND PROJECT NO.: 182045 C.A.N. NO.: AECC250

S1.14

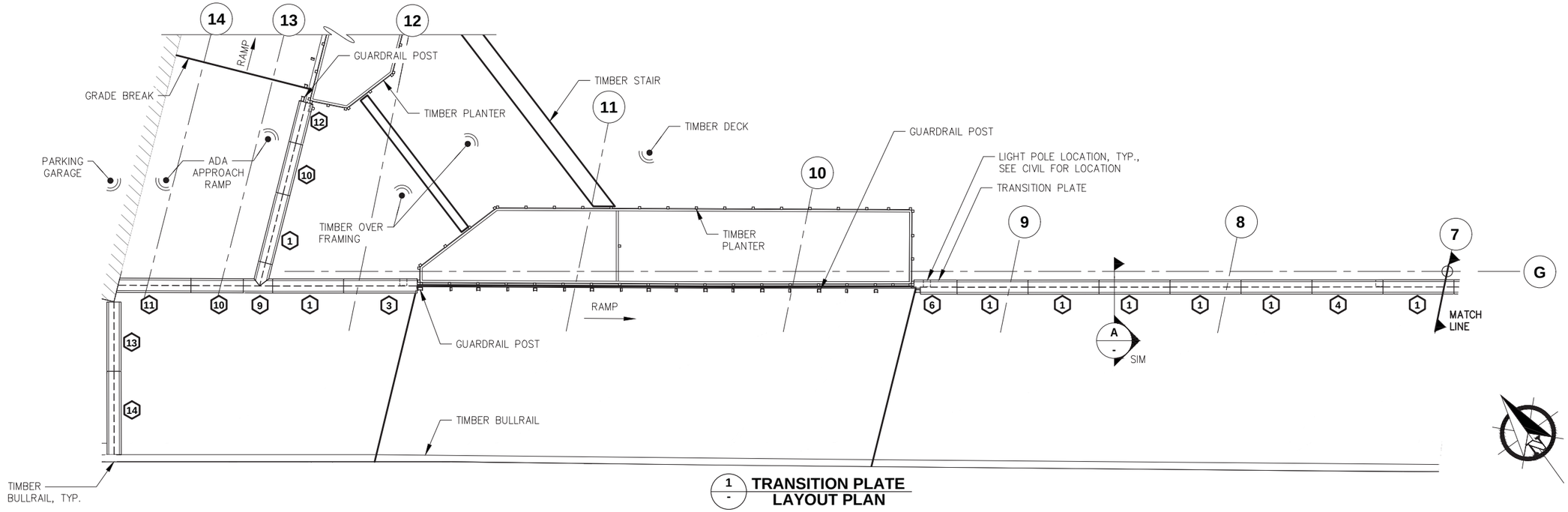

1 - TRANSITION PLATE LAYOUT PLAN

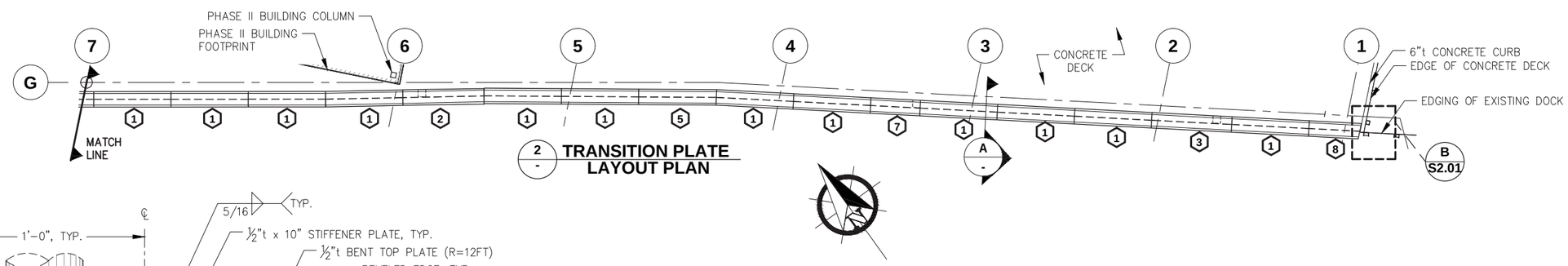

2 - TRANSITION PLATE LAYOUT PLAN

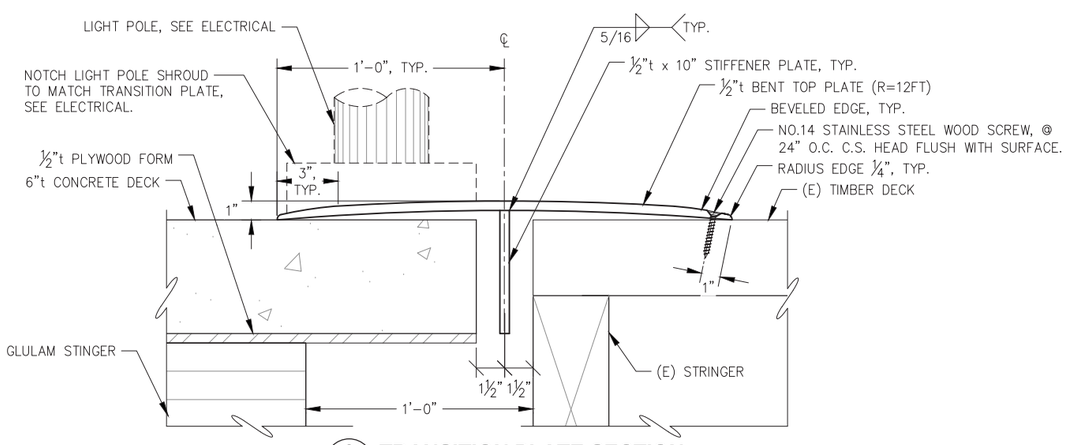

A - TRANSITION PLATE SECTION
NTS

NOTE:
1. # INDICATES PLATE DESIGNATION
2. PLATE EDGES ARE 90° UNLESS NOTED OTHERWISE
3. FIELD MEASURE ALL FINAL NOTCH LOCATIONS PRIOR TO FABRICATION.

REVISIONS

REV.	DATE	DESCRIPTION	DWN.	CKD.	APP.

P N D ENGINEERS, INC.
9360 Glacier Highway Ste 100
Juneau, Alaska 99801
Phone: 907-586-2093
Fax: 907-586-2099
www.pndengineers.com

DESIGN: MDS CHECKED: CRS
DRAWN: KLL APPROVED: CRS
SCALE: SCALE IN FEET 0 8 16 FT.

STATE OF ALASKA 49TH Charles R. Somerville CE-8845 REGISTERED PROFESSIONAL ENGINEER
DATE: 5/23/2019

DOWNTOWN WATERFRONT IMPROVEMENTS PHASE I
CBJ CONTRACT NO. DH19-014

SHEET TITLE:
TRANSITION PLATE PARTIAL PLAN AND SECTION

PND PROJECT NO.: 182045 C.A.N. NO.: AECC250

S1.15

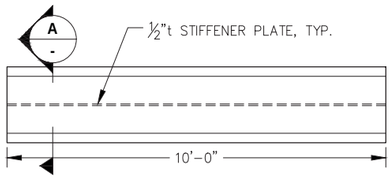

TRANSITION PLATE PLAN TYPE 1
NTS

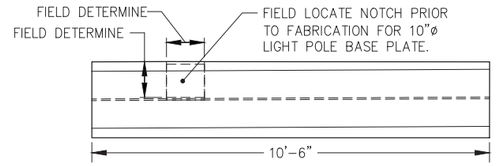

TRANSITION PLATE PLAN TYPE 2
NTS

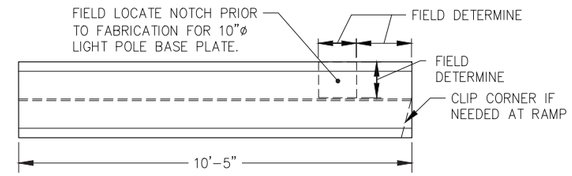

TRANSITION PLATE PLAN TYPE 3
NTS

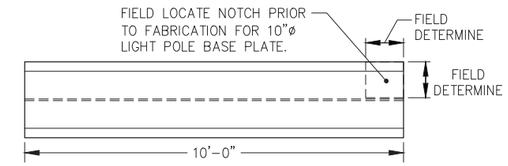

TRANSITION PLATE PLAN TYPE 4
NTS

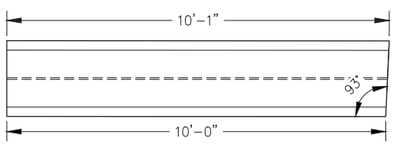

TRANSITION PLATE PLAN TYPE 5
NTS

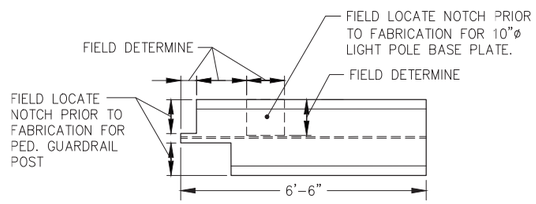

TRANSITION PLATE PLAN TYPE 6
NTS

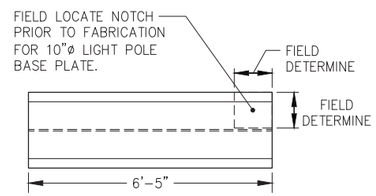

TRANSITION PLATE PLAN TYPE 7
NTS

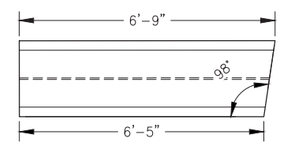

TRANSITION PLATE PLAN TYPE 8
NTS

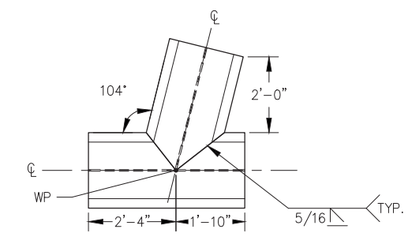

TRANSITION PLATE PLAN TYPE 9
NTS

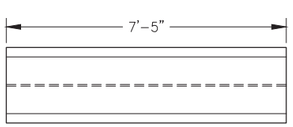

TRANSITION PLATE PLAN TYPE 10

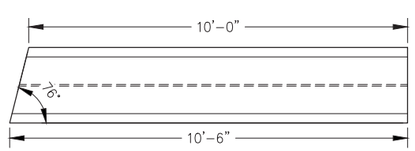

TRANSITION PLATE PLAN TYPE 11
NTS

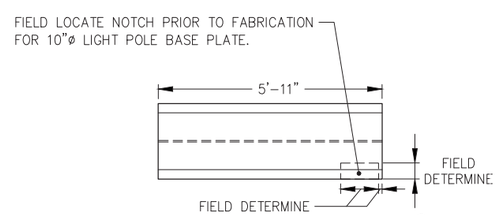

TRANSITION PLATE PLAN TYPE 12
NTS

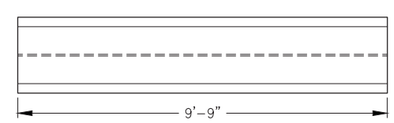

TRANSITION PLATE PLAN TYPE 13
NTS

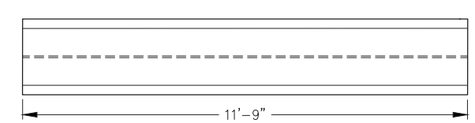

TRANSITION PLATE PLAN TYPE 14
NTS

REVISIONS

REV.	DATE	DESCRIPTION	DWN.	CKD.	APP.

P | N | D ENGINEERS, INC.
9360 Glacier Highway Ste 100
Juneau, Alaska 99801
Phone: 907-586-2093
Fax: 907-586-2099
www.pndengineers.com

DESIGN: MDS CHECKED: CRS
DRAWN: KLL APPROVED: CRS
SCALE: NTS

STATE OF ALASKA 49TH Charles R. Somerville CE-8845 REGISTERED PROFESSIONAL ENGINEER
DATE: 5/23/2019

DOWNTOWN WATERFRONT IMPROVEMENTS PHASE I
CBJ CONTRACT NO. DH19-014

SHEET TITLE:
TRANSITION PLATE LAYOUT

PND PROJECT NO.: 182045 C.A.N. NO.: AECC250

S1.16

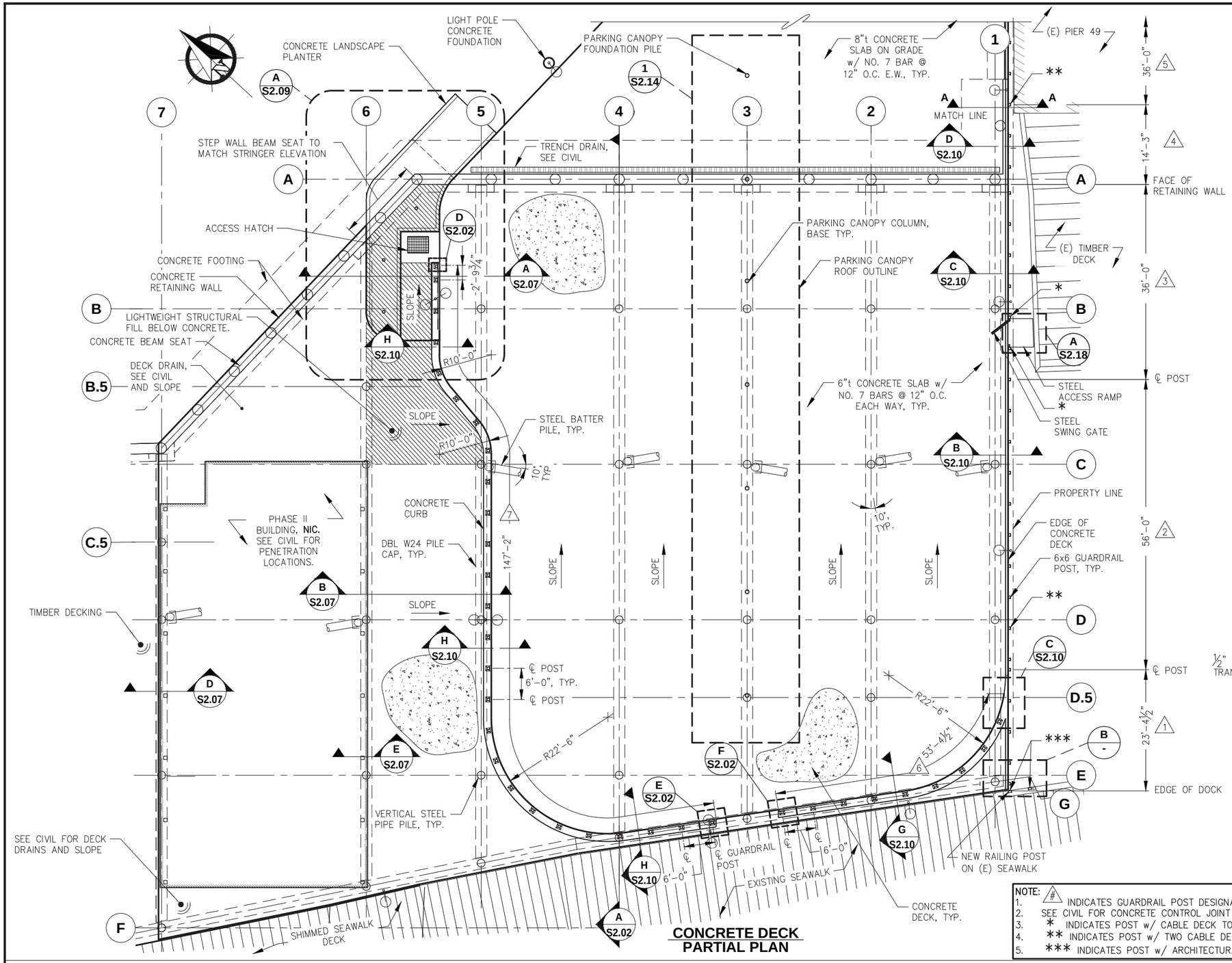

CONCRETE DECK PARTIAL PLAN

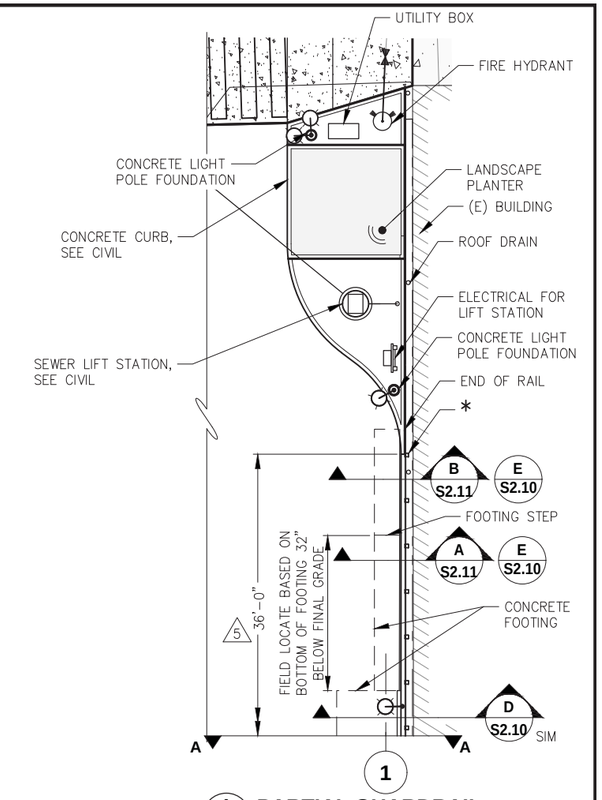

A PARTIAL GUARDRAIL PLAN IN UPLANDS

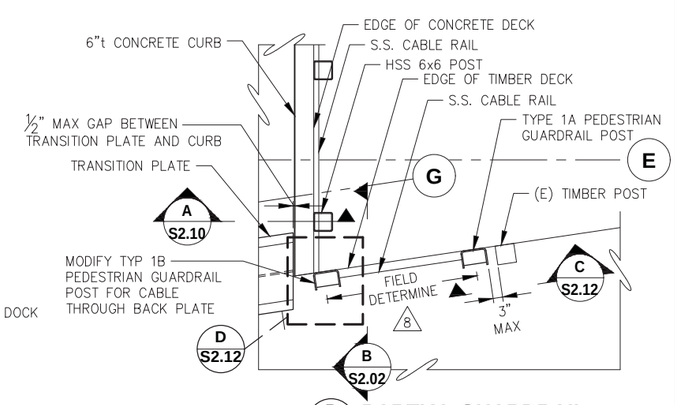

B PARTIAL GUARDRAIL PLAN AT SEAWALK

NOTE:
1. # INDICATES GUARDRAIL POST DESIGNATIONS
2. SEE CIVIL FOR CONCRETE CONTROL JOINT PATTERN AND GRADES
3. * INDICATES POST w/ CABLE DECK TOGGLE TERMINATIONS.
4. ** INDICATES POST w/ TWO CABLE DECK TOGGLE TERMINATIONS OR TURNBUCKLES
5. *** INDICATES POST w/ ARCHITECTURAL TERMINATIONS/TURNBUCKLES.

REVISIONS

REV.	DATE	DESCRIPTION	DWN.	CKD.	APP.

P N D ENGINEERS, INC.
9360 Glacier Highway Ste 100
Juneau, Alaska 99801
Phone: 907-586-2093
Fax: 907-586-2099
www.pndengineers.com

DESIGN: MDS CHECKED: CRS
DRAWN: KLL APPROVED: CRS
SCALE: SCALE IN FEET 0 10 20 FT.

STATE OF ALASKA 49TH Charles R. Somerville CE-8845 REGISTERED PROFESSIONAL ENGINEER
DATE: 5/23/2019

DOWNTOWN WATERFRONT IMPROVEMENTS PHASE I
CBJ CONTRACT NO. DH19-014

SHEET TITLE: **CONCRETE DECK PARTIAL PLAN**

PND PROJECT NO.: 182045 C.A.N. NO.: AECC250

S2.01

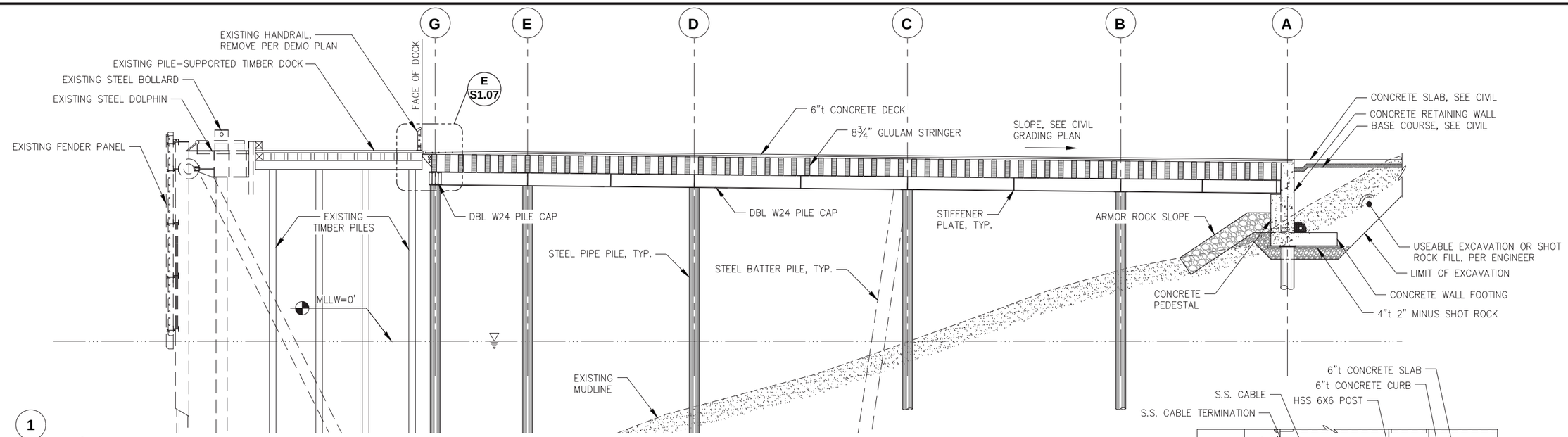

A S2.01 **CONCRETE DECK ELEVATION**

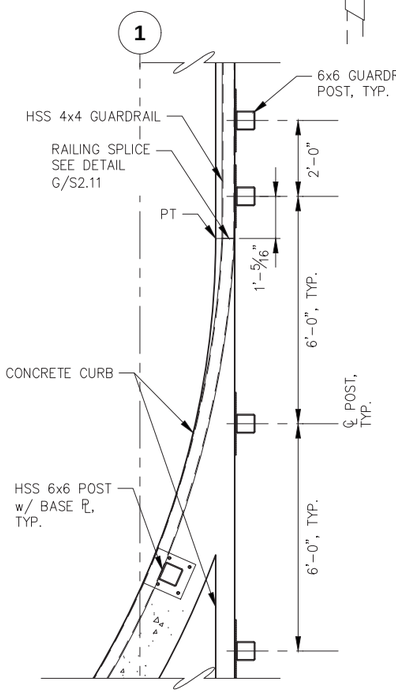

C S2.01 **TYPICAL END OF CURB GUARDRAIL POST DETAIL**

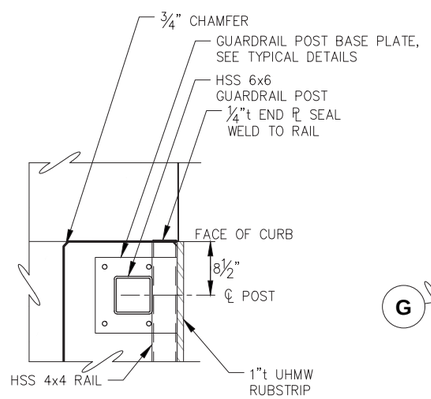

D S2.01 **TYPICAL END OF CURB GUARDRAIL POST DETAIL**

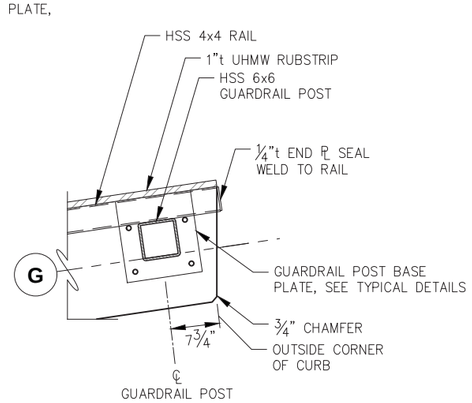

E S2.01 **TYPICAL END OF CURB GUARDRAIL POST DETAIL**

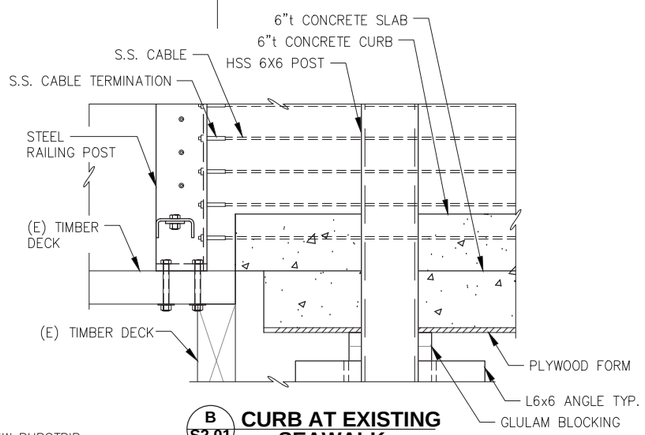

B S2.01 **CURB AT EXISTING SEAWALK**

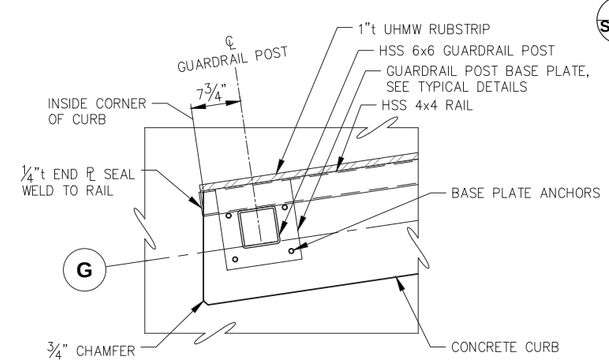

F S2.01 **TYPICAL END OF CURB GUARDRAIL POST DETAIL**

NOTE:
1. RUBSTRIP NOT SHOWN FOR CLARITY

REVISIONS

REV.	DATE	DESCRIPTION	DWN.	CKD.	APP.

P N D ENGINEERS, INC.
9360 Glacier Highway Ste 100
Juneau, Alaska 99801
Phone: 907-586-2093
Fax: 907-586-2099
www.pndengineers.com

DESIGN: MDS CHECKED: CRS
DRAWN: KLL APPROVED: CRS
SCALE: SCALE IN FEET 0 10 20 FT.

STATE OF ALASKA 49TH Charles R. Somerville CE-8845 REGISTERED PROFESSIONAL ENGINEER
DATE: 5/23/2019

DOWNTOWN WATERFRONT IMPROVEMENTS PHASE I
CBJ CONTRACT NO. DH19-014

SHEET TITLE: **CONCRETE DECK ELEVATION AND SECTION**

S2.02

PND PROJECT NO.: 182045 C.A.N. NO.: AECC250

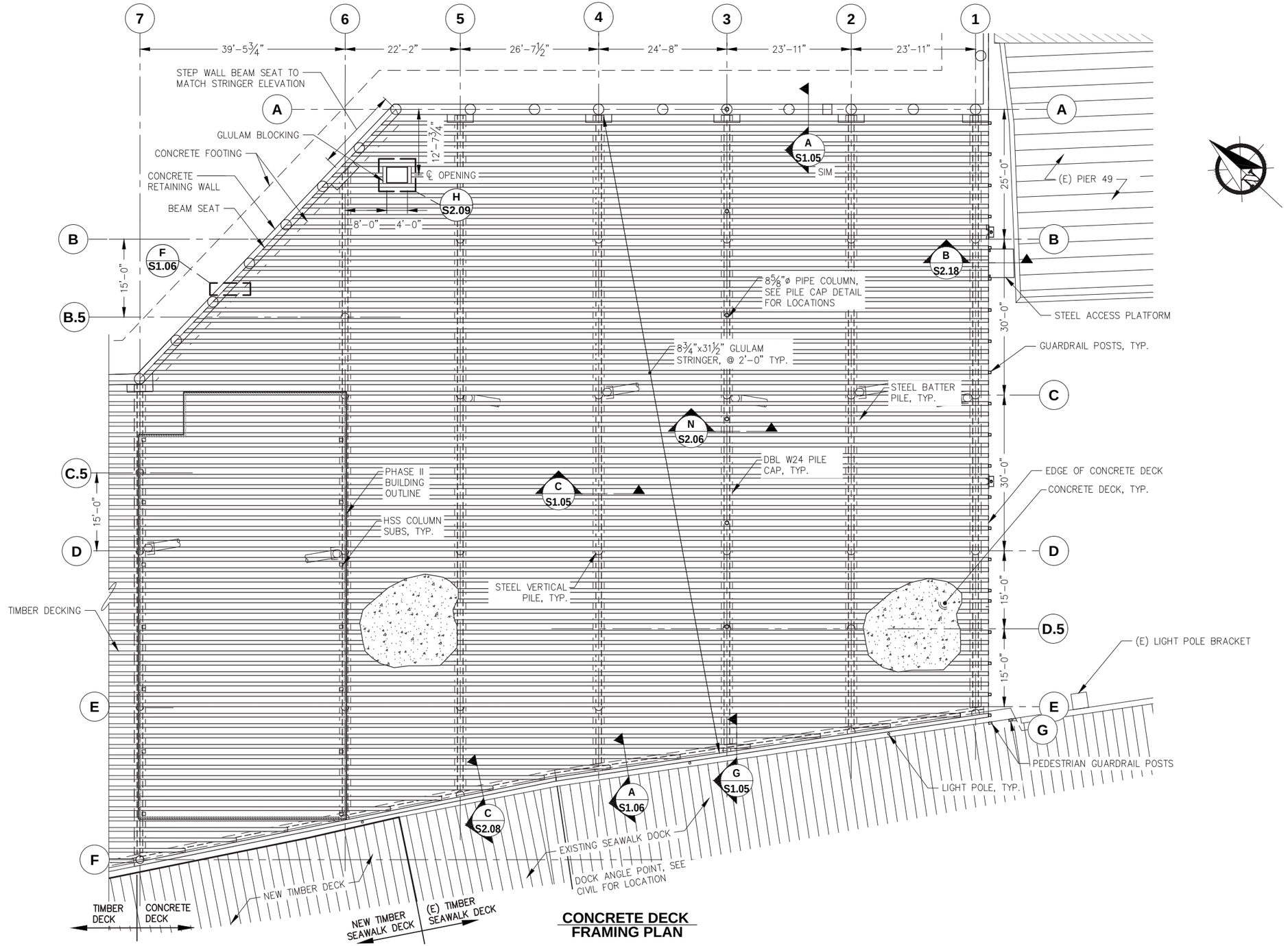

CONCRETE DECK FRAMING PLAN

REVISIONS

REV.	DATE	DESCRIPTION	DWN.	CKD.	APP.

P N D ENGINEERS, INC.
9360 Glacier Highway Ste 100
Juneau, Alaska 99801
Phone: 907-586-2093
Fax: 907-586-2099
www.pndengineers.com

DESIGN: MDS CHECKED: CRS
DRAWN: KLL APPROVED: CRS
SCALE: SCALE IN FEET 0 10 20 FT.

STATE OF ALASKA 49TH Charles R. Somerville CE-8845 REGISTERED PROFESSIONAL ENGINEER
DATE: 5/23/2019

DOWNTOWN WATERFRONT IMPROVEMENTS PHASE I
CBJ CONTRACT NO. DH19-014

SHEET TITLE: **CONCRETE DECK FRAMING PLAN**

PND PROJECT NO.: 182045 C.A.N. NO.: AECC250

S2.03

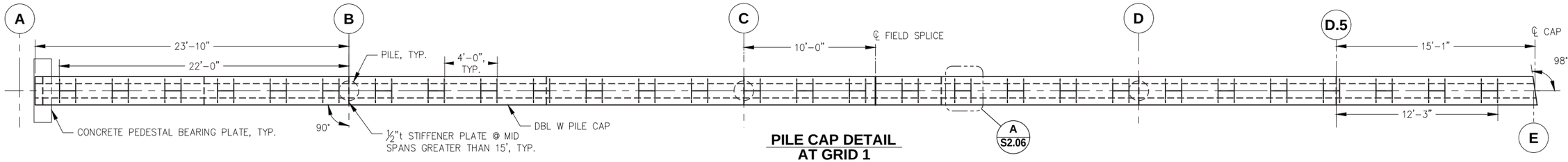

PILE CAP DETAIL AT GRID 1

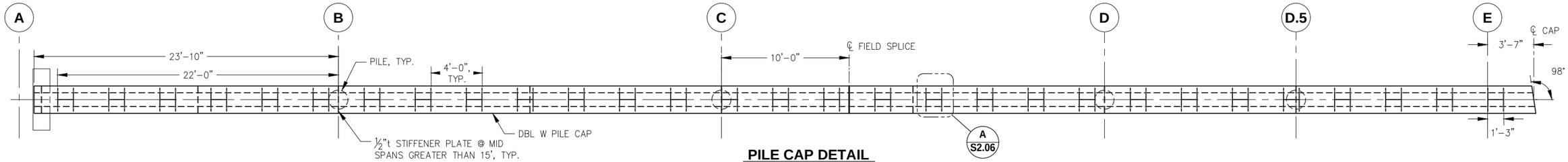

PILE CAP DETAIL AT GRID 2

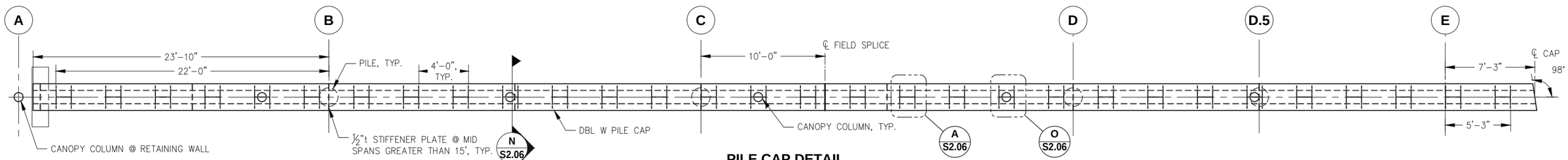

PILE CAP DETAIL AT GRID 3

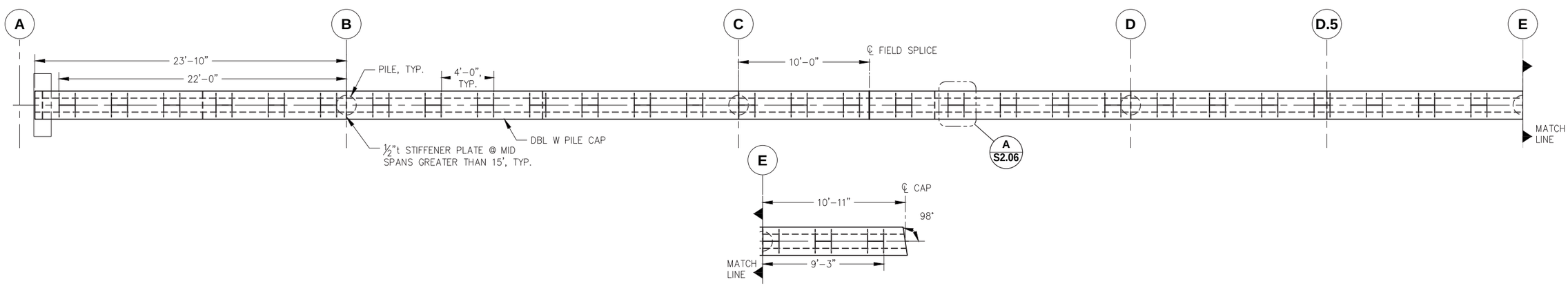

PILE CAP DETAIL AT GRID 4

NOTE:
1. SHOP SPLICE AS REQUIRED FOR SECTIONS TO FIT IN GALVANIZING TANKS.
2. ALL PLATE DIMENSIONS ARE TO THE OUTSIDE OF SIDE PLATE, UNLESS NOTED OTHERWISE
3. ALL PILE CAPS ARE DBL W24x131, UNLESS OTHERWISE NOTED
4. ONE STIFFENER PLATE SHALL BE LOCATED AT ℄ EACH PILE, AND ONE PLATE AT MIDSPAN BETWEEN PILES AT PILE SPACING GREATER THAN 15' O.C.

REVISIONS

REV.	DATE	DESCRIPTION	DWN.	CKD.	APP.

P N D ENGINEERS, INC.
9360 Glacier Highway Ste 100
Juneau, Alaska 99801
Phone: 907-586-2093
Fax: 907-586-2099
www.pndengineers.com

DESIGN: MDS CHECKED: CRS
DRAWN: KLL APPROVED: CRS
SCALE: SCALE IN FEET 0 10 20 FT.

STATE OF ALASKA 49TH Charles R. Somerville CE-8845 REGISTERED PROFESSIONAL ENGINEER
DATE: 5/23/2019

DOWNTOWN WATERFRONT IMPROVEMENTS PHASE I
CBJ CONTRACT NO. DH19-014

SHEET TITLE: **PILE CAP PLAN**

PND PROJECT NO.: 182045 C.A.N. NO.: AECC250

S2.04

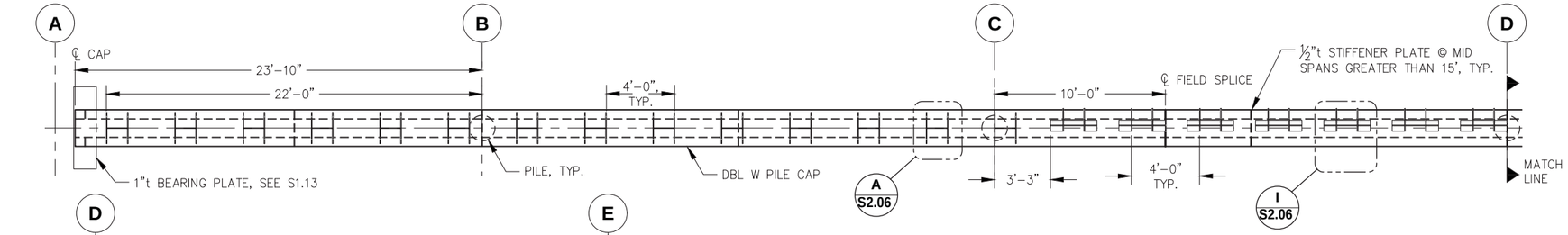

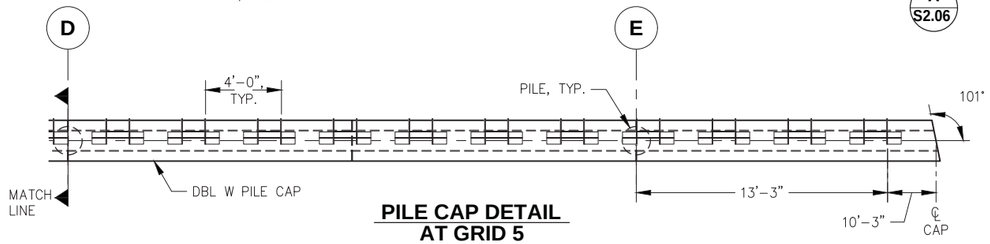

PILE CAP DETAIL AT GRID 5

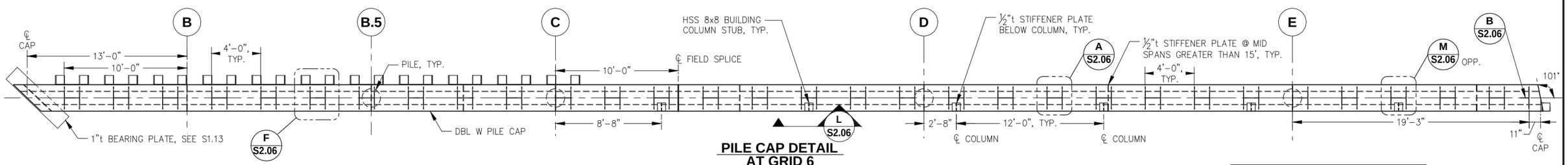

PILE CAP DETAIL AT GRID 6

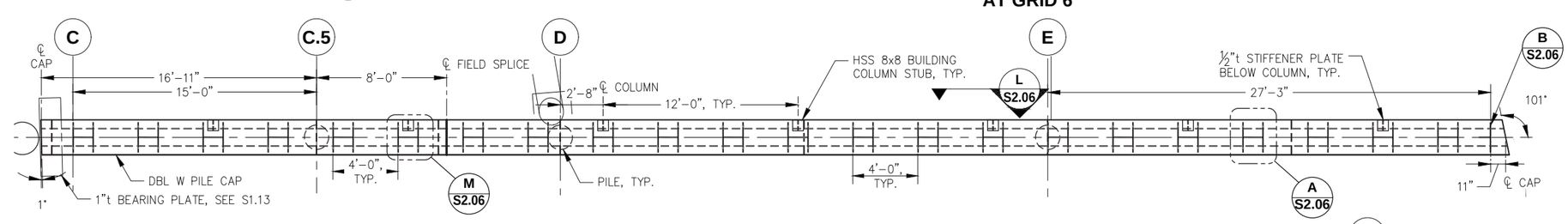

PILE CAP DETAIL AT GRID 7

NOTE:
1. GRID 6 AND 7 PILE CAPS SHALL BE ALIGNED SO THE ℄ OF EACH COLUMN POSTS SHALL BE ALIGNED HORIZONTALLY WITHIN ± 1/16"

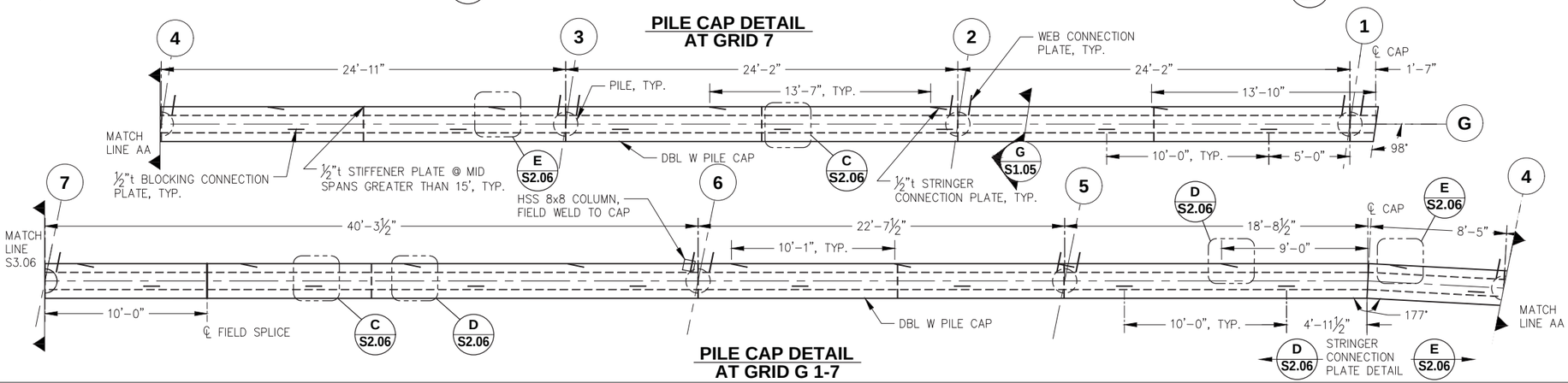

PILE CAP DETAIL AT GRID G 1-7

NOTE:
1. SHOP SPLICE AS REQUIRED FOR SECTIONS TO FIT IN GALVANIZING TANKS.
2. ALL PLATE DIMENSIONS ARE TO THE OUTSIDE OF SIDE PLATE, UNLESS NOTED OTHERWISE
3. ALL PILE CAPS ARE DBL W24x131, UNLESS OTHERWISE NOTED
4. ONE STIFFENER PLATE SHALL BE LOCATED AT ℄ EACH PILE, AND ONE PLATE AT MIDSPAN BETWEEN PILES AT PILE SPACING GREATER THAN 15' O.C.

CITY & BOROUGH OF JUNEAU — DOCKS & HARBORS

REVISIONS

REV.	DATE	DESCRIPTION	DWN.	CKD.	APP.

PND ENGINEERS, INC.
9360 Glacier Highway Ste 100
Juneau, Alaska 99801
Phone: 907-586-2093
Fax: 907-586-2099
www.pndengineers.com

DESIGN: MDS CHECKED: CRS
DRAWN: KLL APPROVED: CRS
SCALE: SCALE IN FEET 0 4 8 FT.

STATE OF ALASKA 49TH Charles R. Somerville CE-8845 REGISTERED PROFESSIONAL ENGINEER
DATE: 5/23/2019

DOWNTOWN WATERFRONT IMPROVEMENTS PHASE I
CBJ CONTRACT NO. DH19-014

SHEET TITLE: **PILE CAP PLAN**

PND PROJECT NO.: 182045 C.A.N. NO.: AECC250

S2.05

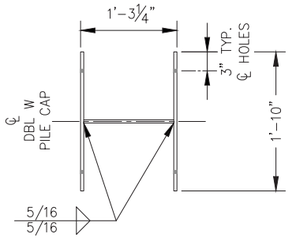

A - STRINGER CONNECTION WELDMENT

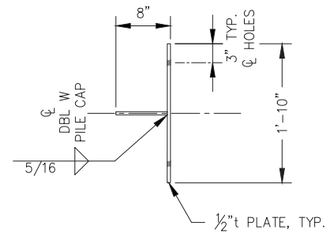

B - STRINGER CONNECTION WELDMENT

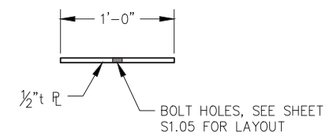

C - STRINGER CONNECTION WELDMENT

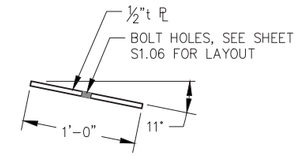

D - TYPICAL ANGLED STRINGER CONNECTION PLATE

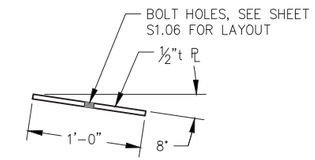

E - TYPICAL ANGLED STRINGER CONNECTION PLATE

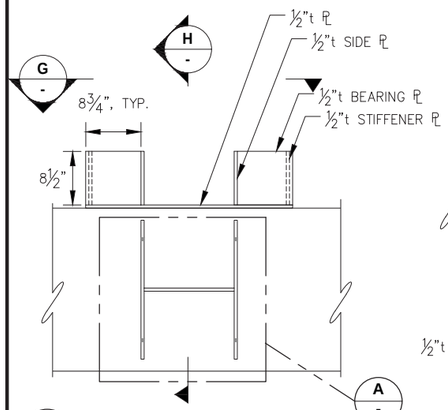

F - STRINGER CONNECTION WELDMENT

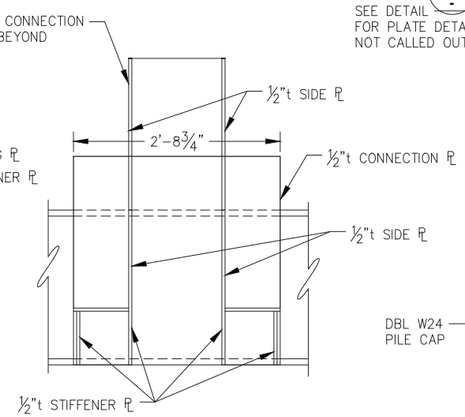

G - TYPE F ELEVATION

NOTE: BOLT HOLES NOT SHOWN FOR CLARITY

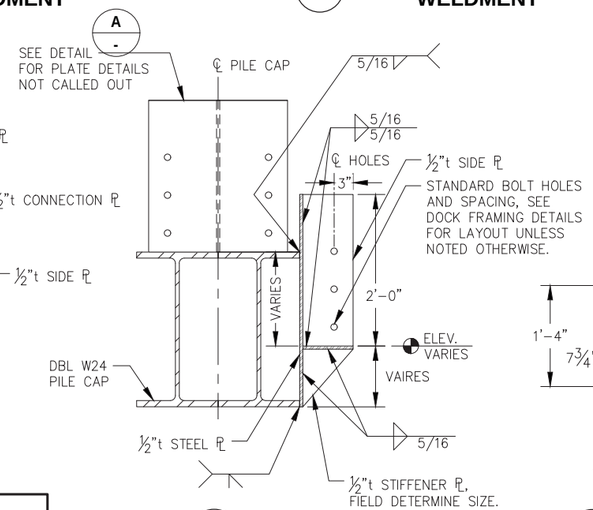

H - TYPE F SECTION

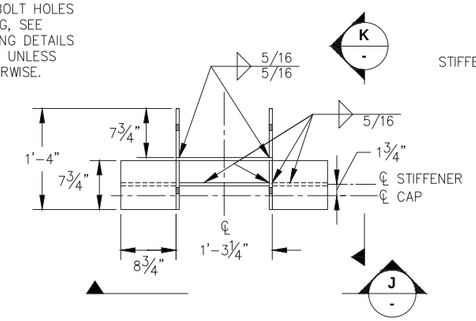

I - STRINGER CONNECTION WELDMENT

NOTE: ALL PL ARE ½"t STEEL

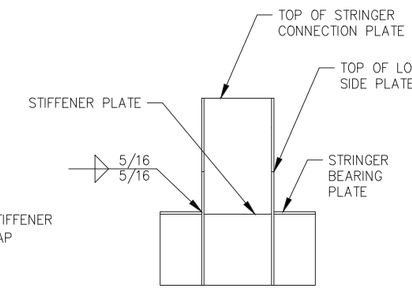

NOTE: BOLT HOLES NOT SHOWN FOR CLARITY

J - STRINGER CONNECTION ELEVATION

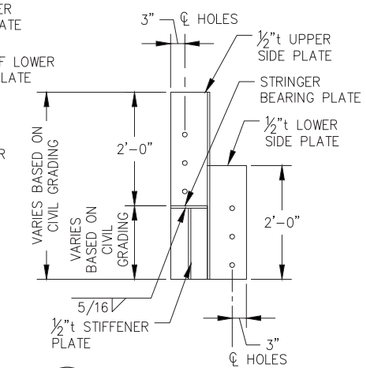

K - STRINGER CONNECTION SECTION

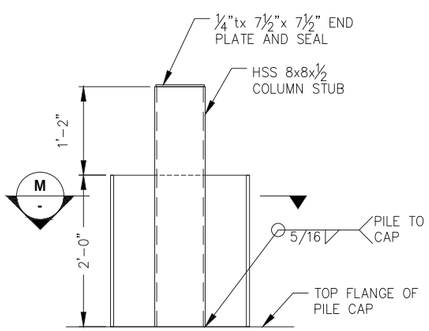

L - TYPICAL BUILDING COLUMN STUB DETAIL

NOTE: BOLT HOLES NOT SHOWN FOR CLARITY

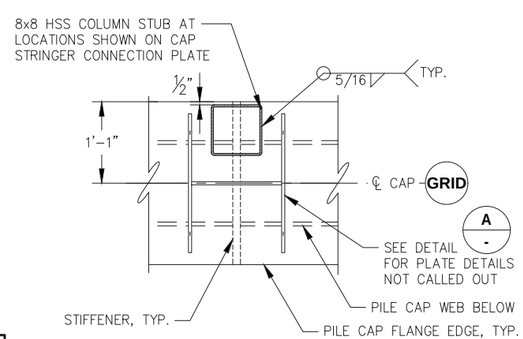

M - TYPICAL BUILDING COLUMN STUB CONNECTION DETAIL

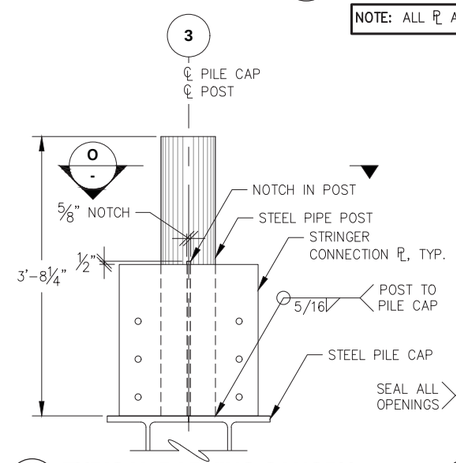

N - TYPICAL PARKING CANOPY CONNECTION DETAIL

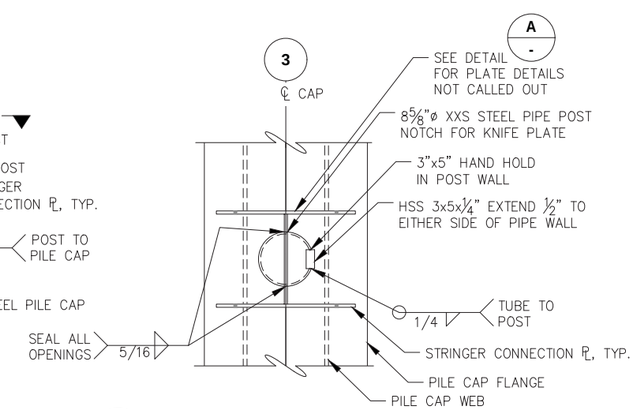

O - TYPICAL PRE-ENGINEERED CANOPY CONNECTION DETAIL

REVISIONS

REV.	DATE	DESCRIPTION	DWN.	CKD.	APP.

PND ENGINEERS, INC.
9360 Glacier Highway Ste 100
Juneau, Alaska 99801
Phone: 907-586-2093
Fax: 907-586-2099
www.pndengineers.com

DESIGN: MDS CHECKED: CRS
DRAWN: KLL APPROVED: CRS
SCALE: SCALE IN FEET 0 10 20 FT.

STATE OF ALASKA 49TH Charles R. Somerville CE-8845 REGISTERED PROFESSIONAL ENGINEER
DATE: 5/23/2019

DOWNTOWN WATERFRONT IMPROVEMENTS PHASE I
CBJ CONTRACT NO. DH19-014

SHEET TITLE: **PILE CAP PLAN**

PND PROJECT NO.: 182045 C.A.N. NO.: AECC250

S2.06

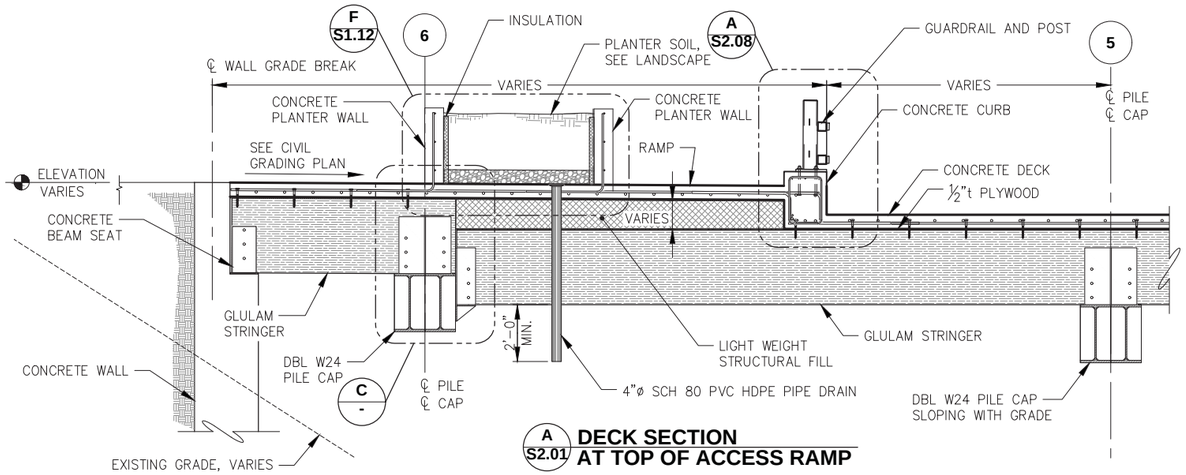

A S2.01 **DECK SECTION AT TOP OF ACCESS RAMP**

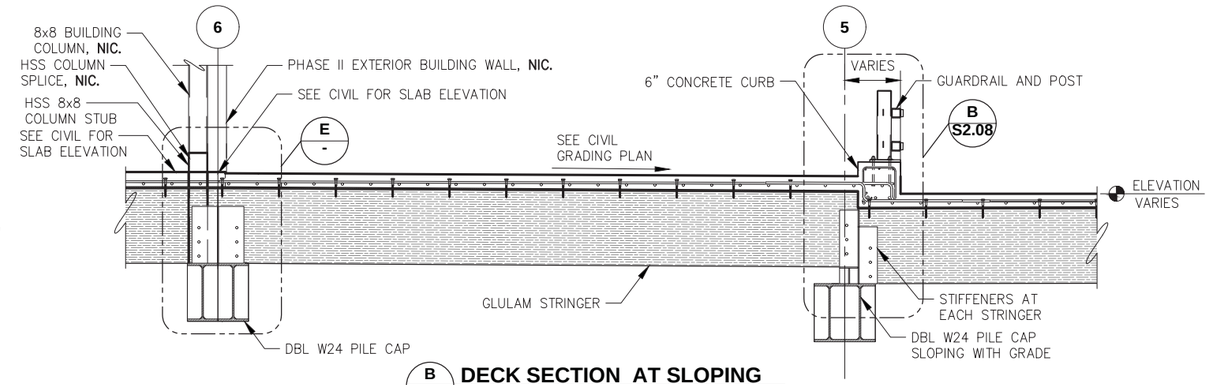

B S2.01 **DECK SECTION AT SLOPING PILE CAP TRANISION**

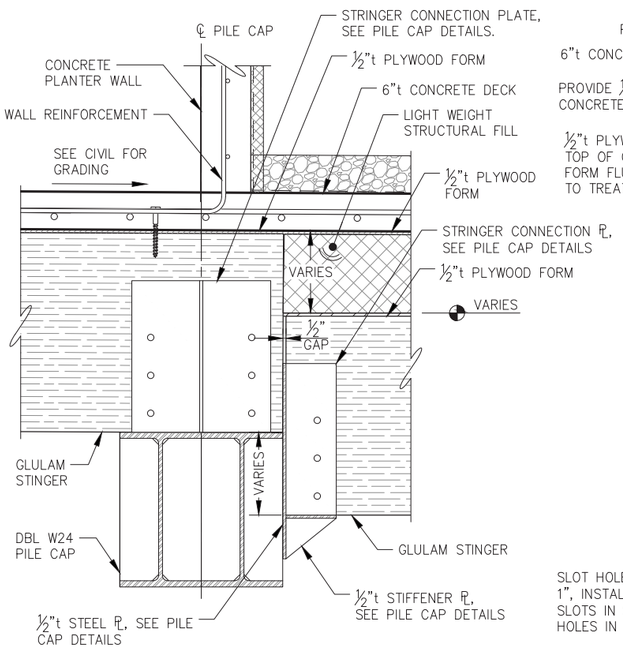

C - **PILE CAP FRAMING DETAIL**

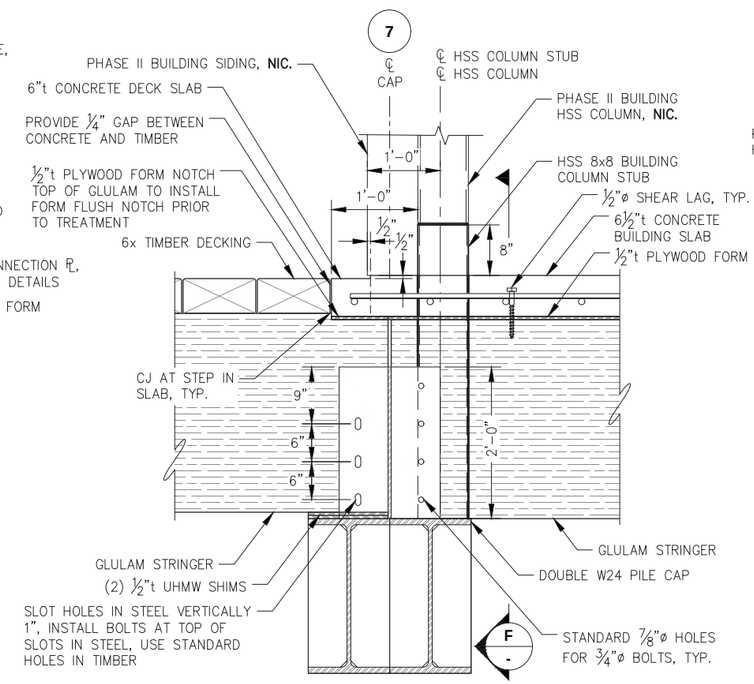

D S2.01 **TIMBER TO CONCRETE JOINT DETAIL AT PHASE II BUILDING EXTERIOR**

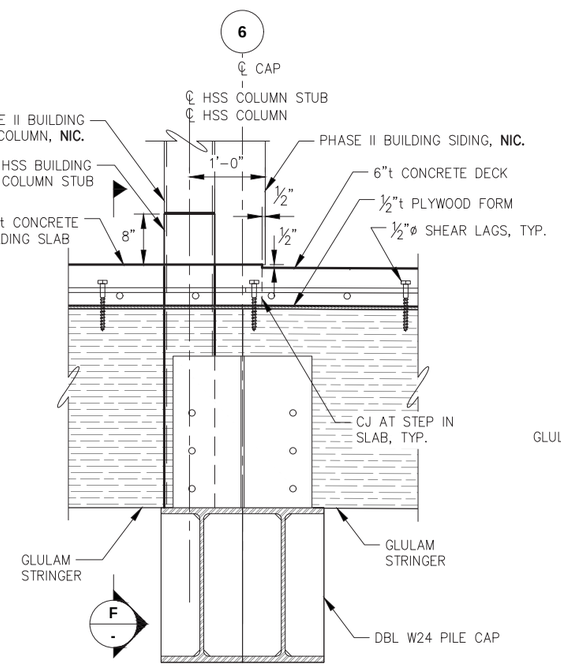

E - **DECK SECTION AT PHASE II BUILDING EXTERIOR**

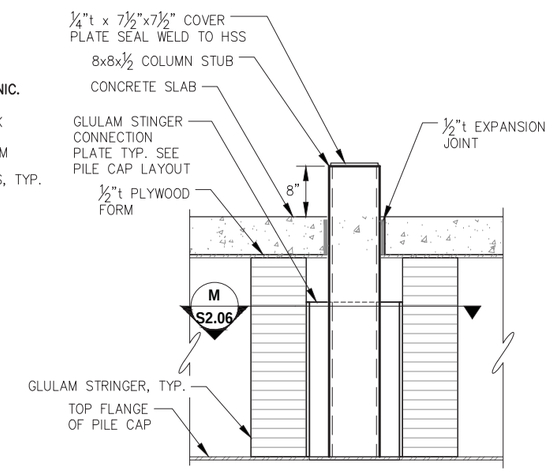

F - **TYPICAL BUILDING COLUMN DETAIL**

REVISIONS

REV.	DATE	DESCRIPTION	DWN.	CKD.	APP.

P N D ENGINEERS, INC.
9360 Glacier Highway Ste 100
Juneau, Alaska 99801
Phone: 907-586-2093
Fax: 907-586-2099
www.pndengineers.com

DESIGN: MDS CHECKED: CRS
DRAWN: KLL APPROVED: CRS
SCALE: NTS

STATE OF ALASKA 49TH Charles R. Somerville CE-8845 REGISTERED PROFESSIONAL ENGINEER
DATE: 5/23/2019

DOWNTOWN WATERFRONT IMPROVEMENTS PHASE I
CBJ CONTRACT NO. DH19-014

SHEET TITLE: **CONCRETE DECK SECTIONS**

PND PROJECT NO.: 182045 C.A.N. NO.: AECC250

S2.07

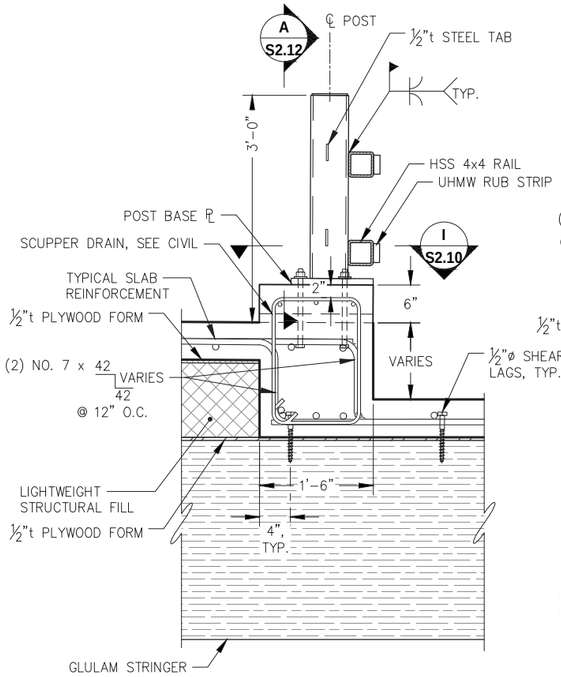

A S2.07 DECK SECTION AT FACE MOUNTED VEHICLE RAIL

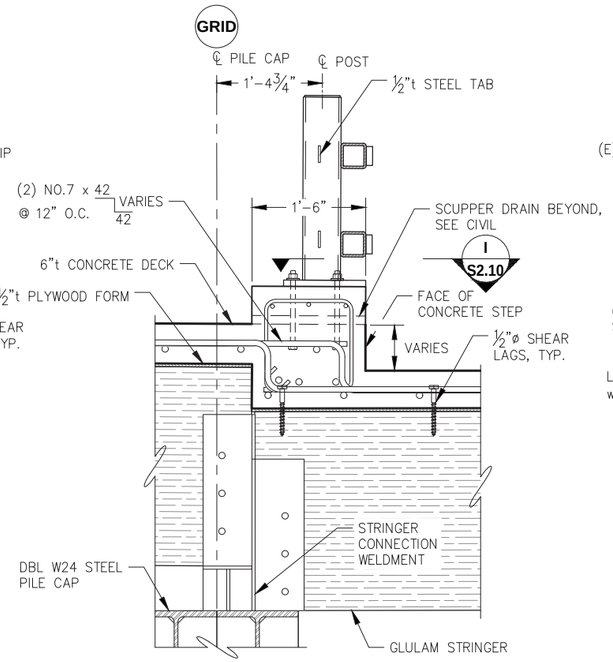

B S2.07 DECK SECTION AT PILE CAP

NOTE: SEE DETAIL A/– FOR DETAILS NOT CALLED OUT

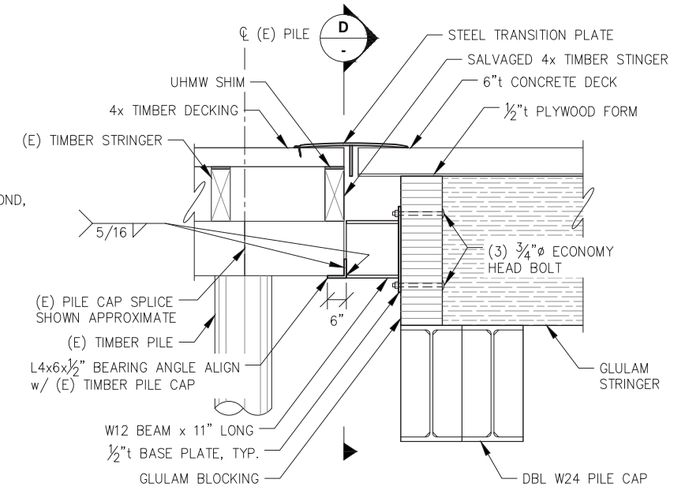

C S2.03 EXISTING CAP SUPPORT BRACKET DETAIL

NOTE:
1. REQUIRED AT (3) (E) PILE CAPS THAT ARE CUT OFF WHEN DEMOLISHING APPROACH DOCK.
2. BLOCKING AND STRINGER CONNECTION PLATES AND BOLTS NOT SHOWN FOR CLARITY.

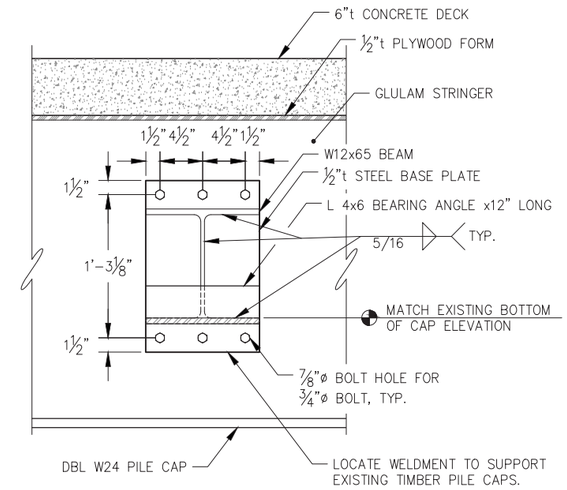

D - EXISTING CAP SUPPORT BRACKET DETAIL

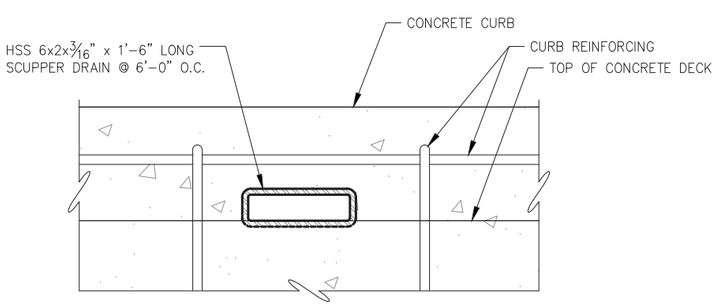

E - TYPICAL SCUPPER DRAIN DETAIL CENTER BETWEEN GUARDRAIL POSTS, TYP.

REVISIONS

REV.	DATE	DESCRIPTION	DWN.	CKD.	APP.

P N D ENGINEERS, INC.
9360 Glacier Highway Ste 100
Juneau, Alaska 99801
Phone: 907-586-2093
Fax: 907-586-2099
www.pndengineers.com

DESIGN: MDS CHECKED: CRS
DRAWN: KLL APPROVED: CRS
SCALE: NTS

STATE OF ALASKA 49TH Charles R. Somerville CE-8845 REGISTERED PROFESSIONAL ENGINEER
DATE: 5/23/2019

DOWNTOWN WATERFRONT IMPROVEMENTS PHASE I
CBJ CONTRACT NO. DH19-014

SHEET TITLE: **CONCRETE DECK DETAILS**

PND PROJECT NO.: 182045 C.A.N. NO.: AECC250

S2.08

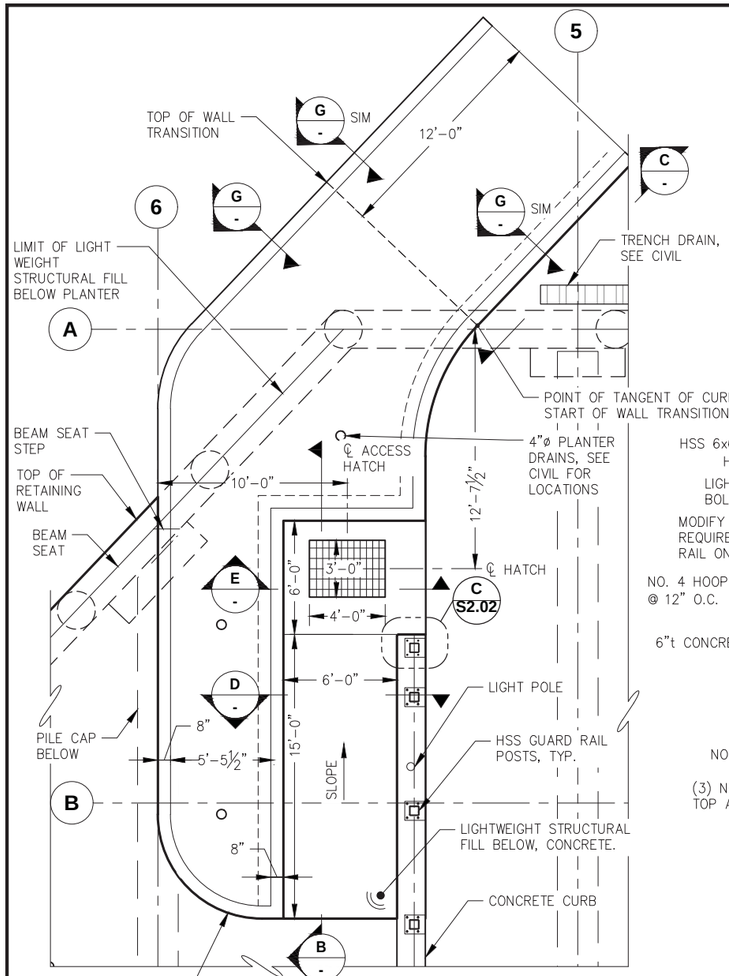

A S2.01 **RAMP PLANTER PARTIAL PLAN**

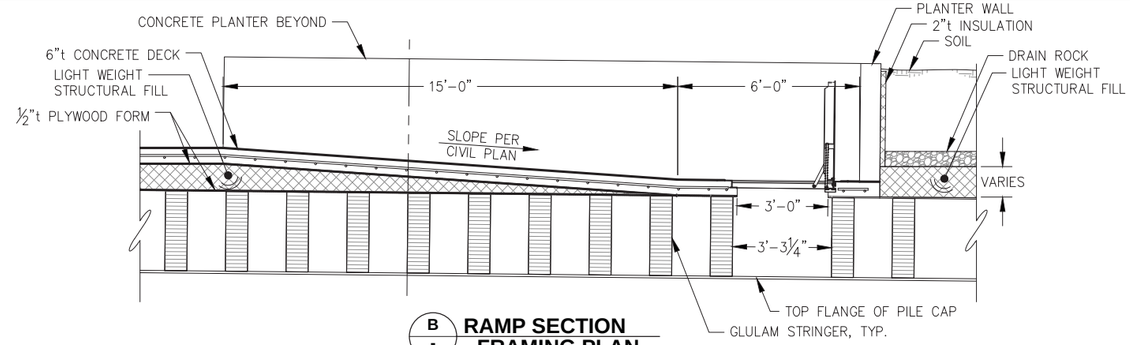

B - **RAMP SECTION FRAMING PLAN**

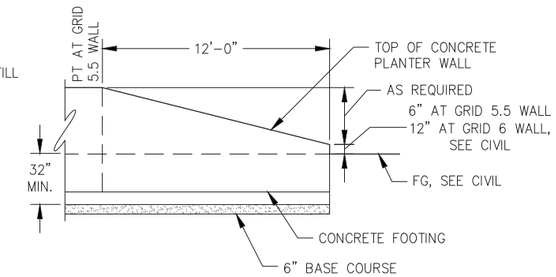

C - **PLANTER WALL TRANSITION**

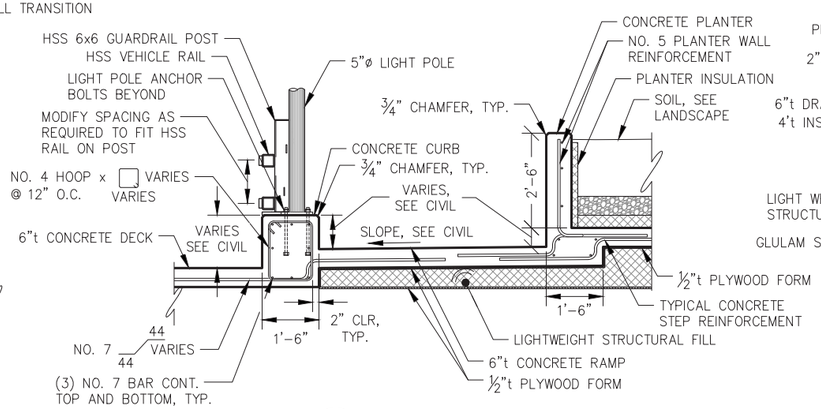

D - **RAMP SECTION**

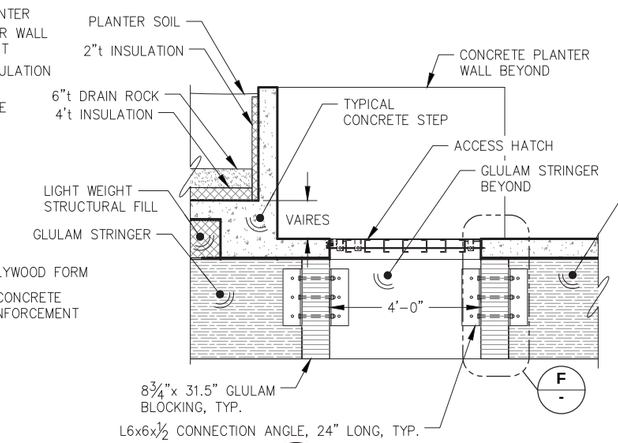

E - **ACCESS HATCH SECTION**

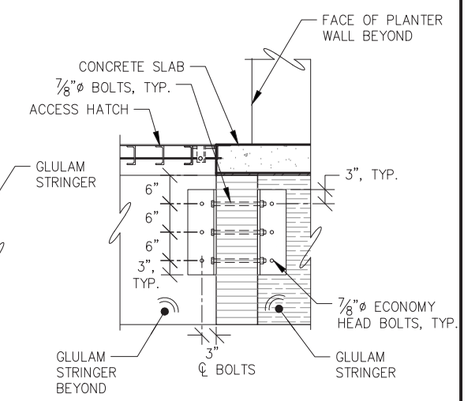

F - **ACCESS HATCH SECTION**

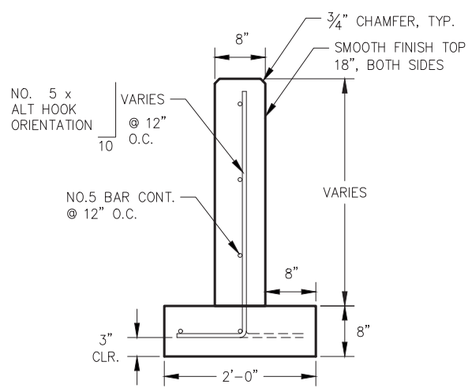

G - **PLANTER WALL SECTION**

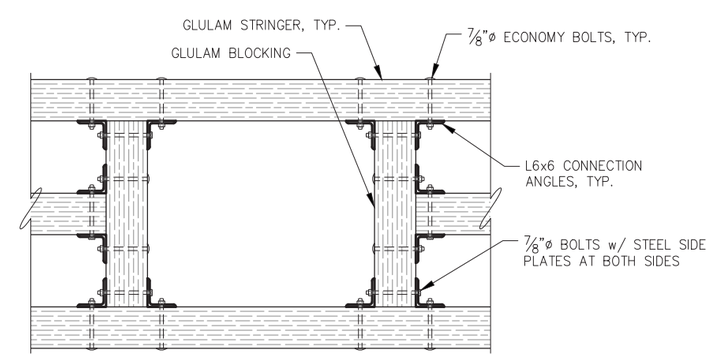

H - **HATCH FRAMING PARTIAL PLAN**

REVISIONS

REV.	DATE	DESCRIPTION	DWN.	CKD.	APP.

P N D ENGINEERS, INC.
9360 Glacier Highway Ste 100
Juneau, Alaska 99801
Phone: 907-586-2093
Fax: 907-586-2099
www.pndengineers.com

DESIGN: MDS CHECKED: CRS
DRAWN: KLL APPROVED: CRS
SCALE: NTS

STATE OF ALASKA 49TH Charles R. Somerville CE-8845 REGISTERED PROFESSIONAL ENGINEER
DATE: 5/23/2019

DOWNTOWN WATERFRONT IMPROVEMENTS PHASE I
CBJ CONTRACT NO. DH19-014

SHEET TITLE: **CONCRETE DECK DETAILS**

PND PROJECT NO.: 182045 C.A.N. NO.: AECC250

S2.09

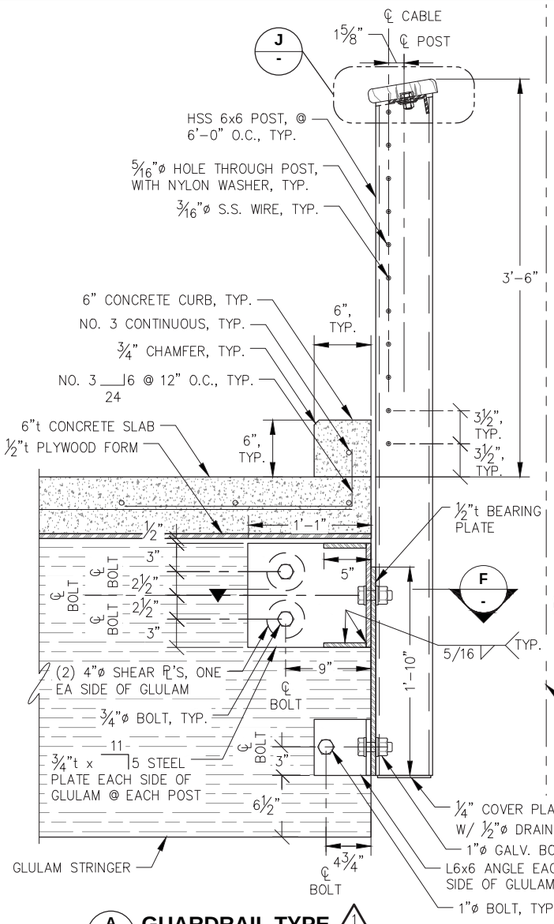

A - GUARDRAIL TYPE 1 POST SECTION

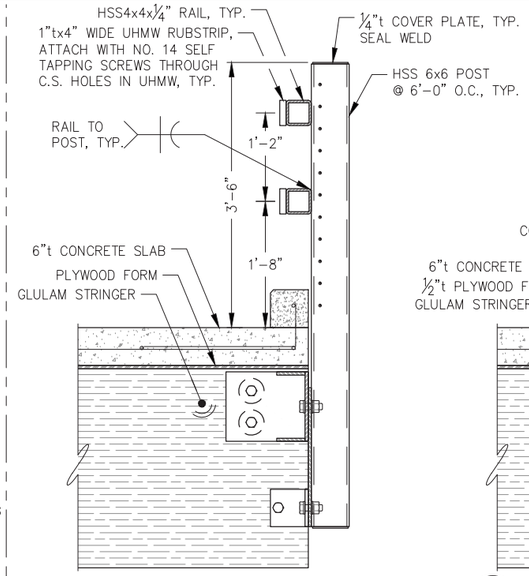

B S2.01 TYPICAL GUARDRAIL TYPE 2 POST CONNECTION DETAIL

NOTE: SEE A/S2.10 FOR CONNECTION DETAIL

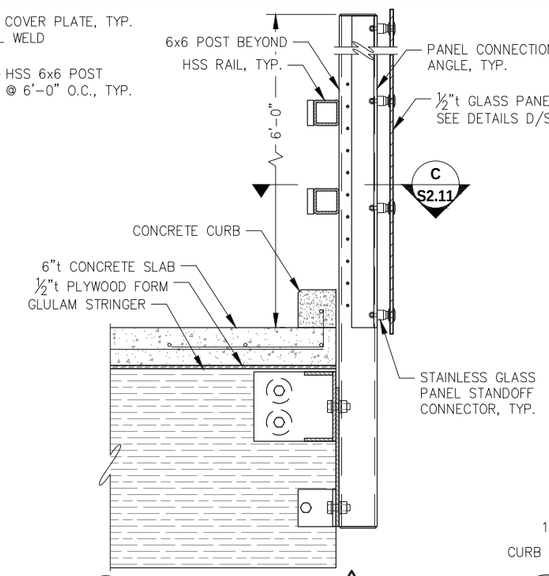

C S2.01 GUARDRAIL TYPE 3 NOISE BARRIER POST SECTION

NOTE: SEE A/S2.10 FOR CONNECTION DETAIL

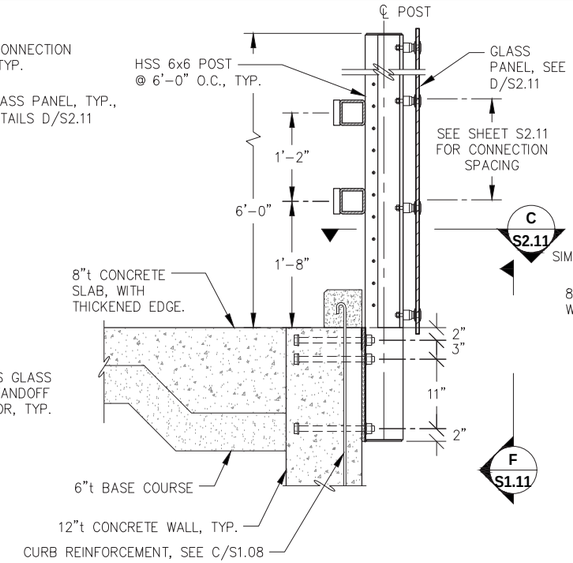

D S2.01 GUARDRAIL TYPE 4 POST CONNECTION AT CONCRETE WALL W/ NOISE BARRIER

NOTE: SEE A/S2.10 FOR NOTES NOT CALLED OUT

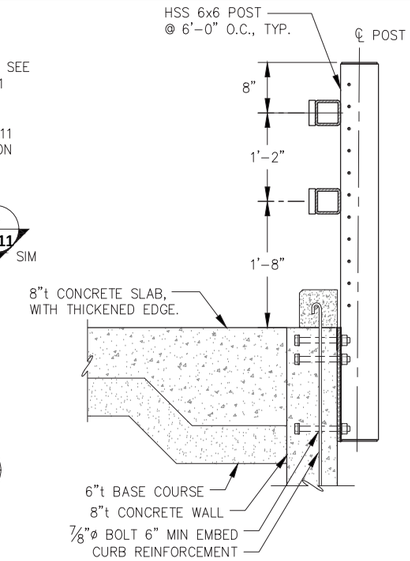

E S2.01 GUARDRAIL TYPE 5 POST CONNECTION AT CONCRETE WALL

NOTE: SEE A/S2.10 FOR NOTES NOT CALLED OUT

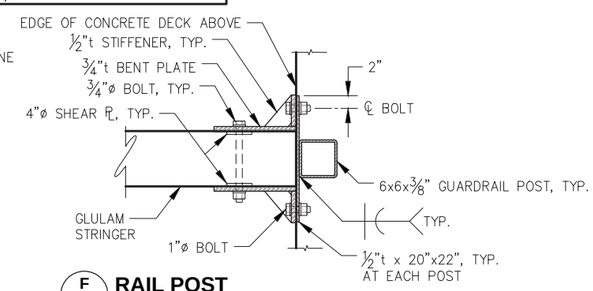

F - RAIL POST CONNECTION SECTION

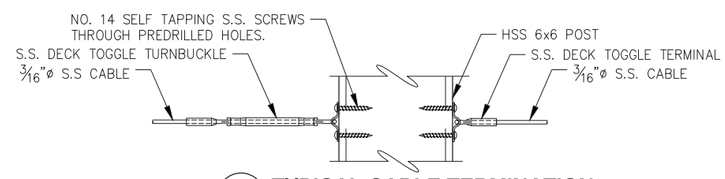

K - TYPICAL CABLE TERMINATION DETAILS

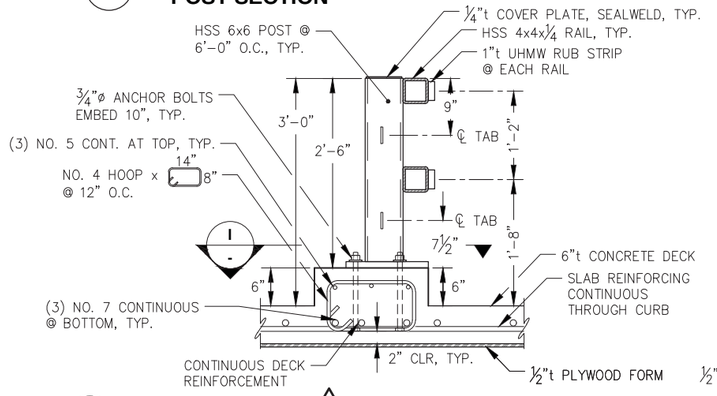

G S2.01 GUARDRAIL TYPE 6 POST CONNECTION AT SURFACE MOUNT LOCATION

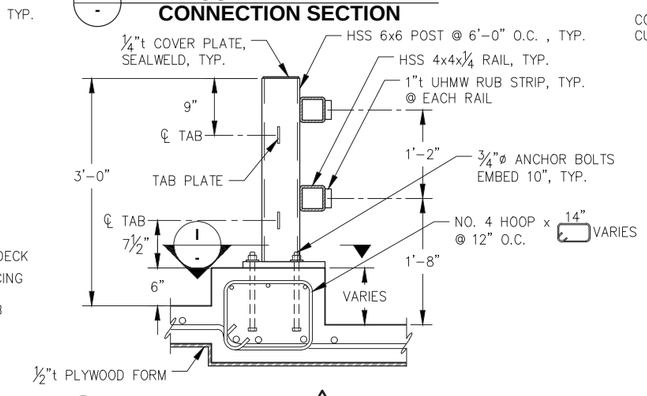

H - GUARDRAIL TYPE 7 POST CONNECTION AT SURFACE MOUNT LOCATION

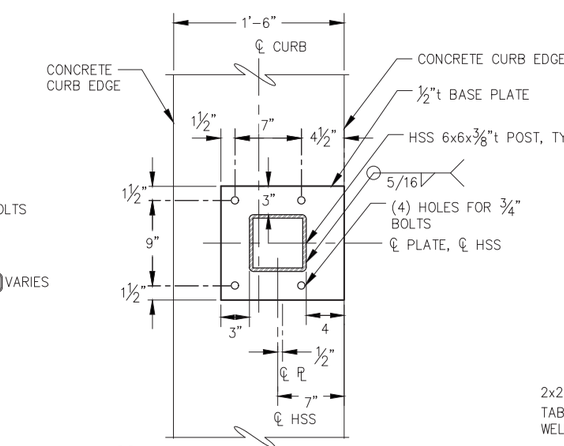

I - FACE MOUNT GUARDRAIL POST CONNECTION DETAIL

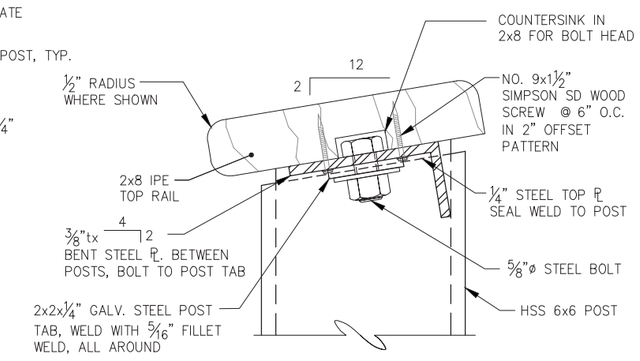

J - TYPICAL GUARDRAIL TOP RAIL DETAIL

REVISIONS

REV.	DATE	DESCRIPTION	DWN.	CKD.	APP.

P N D ENGINEERS, INC.
9360 Glacier Highway Ste 100
Juneau, Alaska 99801
Phone: 907-586-2093
Fax: 907-586-2099
www.pndengineers.com

DESIGN: MDS CHECKED: CRS
DRAWN: KLL APPROVED: CRS
SCALE: NTS

STATE OF ALASKA 49TH Charles R. Somerville CE-8845 REGISTERED PROFESSIONAL ENGINEER
DATE: 5/23/2019

DOWNTOWN WATERFRONT IMPROVEMENTS PHASE I
CBJ CONTRACT NO. DH19-014

SHEET TITLE:
CONCRETE DECK RAILING SECTIONS AND ELEVATIONS

PND PROJECT NO.: 182045 C.A.N. NO.: AECC250

S2.10

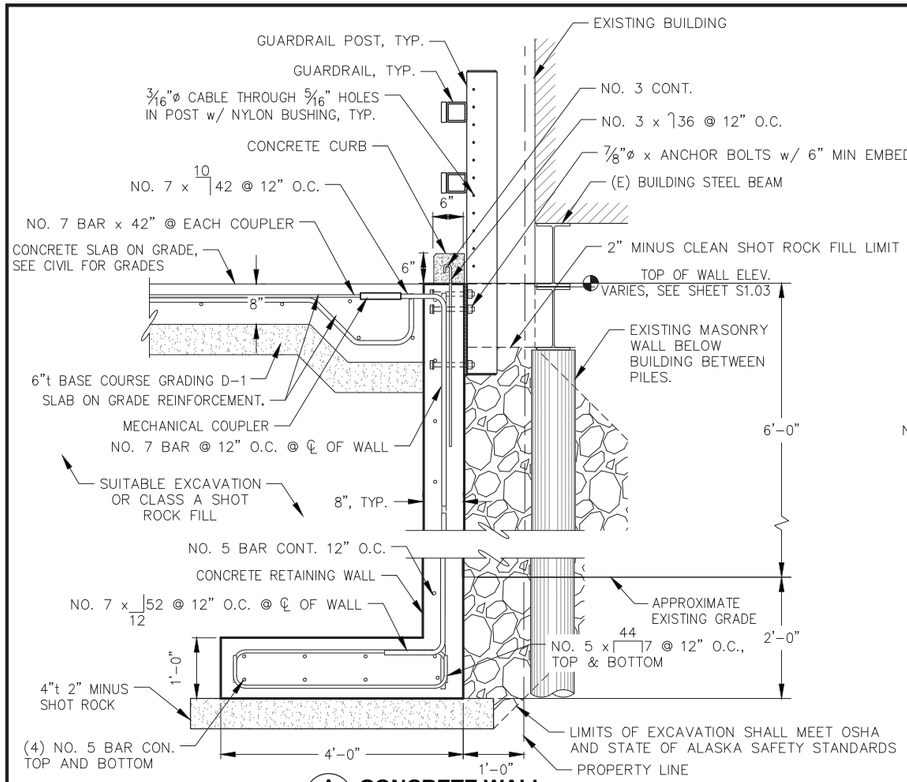

A S2.01 **CONCRETE WALL SECTION**

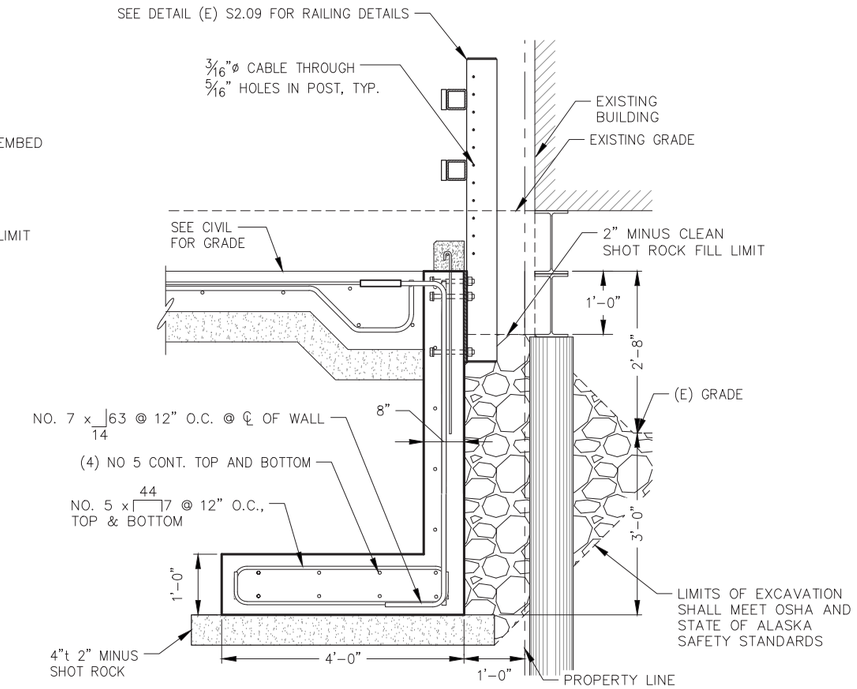

B S2.01 **CONCRETE WALL SECTION**

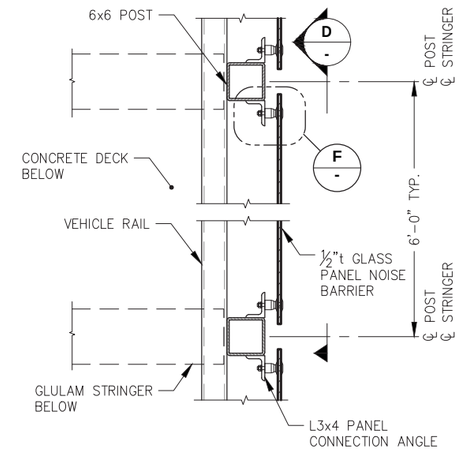

C - **VEHICLE RAIL NOISE BARRIER PANEL SECTION**

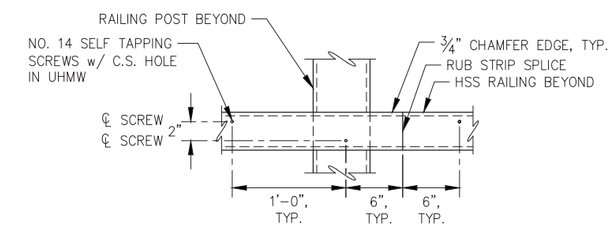

K - **RUB STRIP PROFILE**

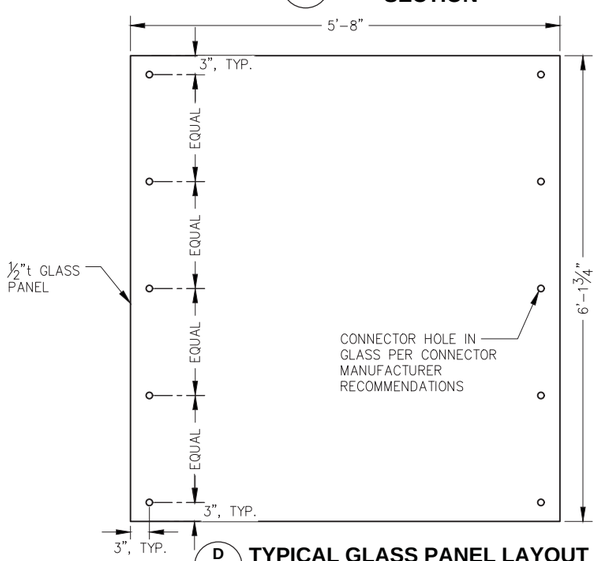

D - **TYPICAL GLASS PANEL LAYOUT**

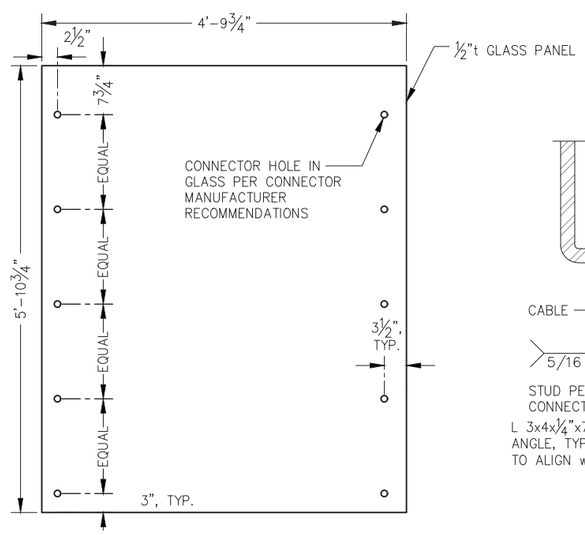

E - **GLASS PANEL AT GATE LAYOUT**

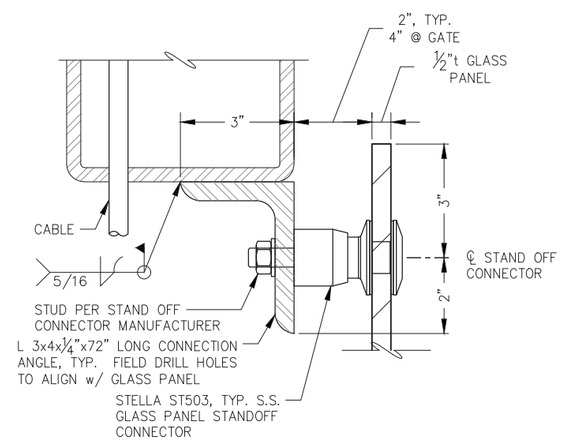

F - **TYPICAL GLASS STAND OFF CONNECTOR**

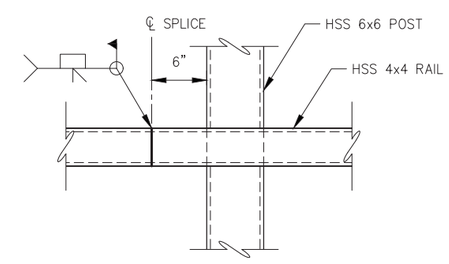

G - **TYPICAL RAIL SPLICE**

NOTE: LOCATE SPLICE IN OVERALL LENGTH OF RAILING AS REQ. FOR EASE OF CONSTRUCTION

REVISIONS

REV.	DATE	DESCRIPTION	DWN.	CKD.	APP.

P N D ENGINEERS, INC.
9360 Glacier Highway Ste 100
Juneau, Alaska 99801
Phone: 907-586-2093
Fax: 907-586-2099
www.pndengineers.com

DESIGN: MDS CHECKED: CRS
DRAWN: KLL APPROVED: CRS
SCALE: NTS

STATE OF ALASKA 49TH Charles R. Somerville CE-8845 REGISTERED PROFESSIONAL ENGINEER
DATE: 5/23/2019

DOWNTOWN WATERFRONT IMPROVEMENTS PHASE I
CBJ CONTRACT NO. DH19-014

SHEET TITLE:
CONCRETE WALL SECTIONS AND MISCELLANEOUS RAILING DETAIL

PND PROJECT NO.: 182045 C.A.N. NO.: AECC250

S2.11

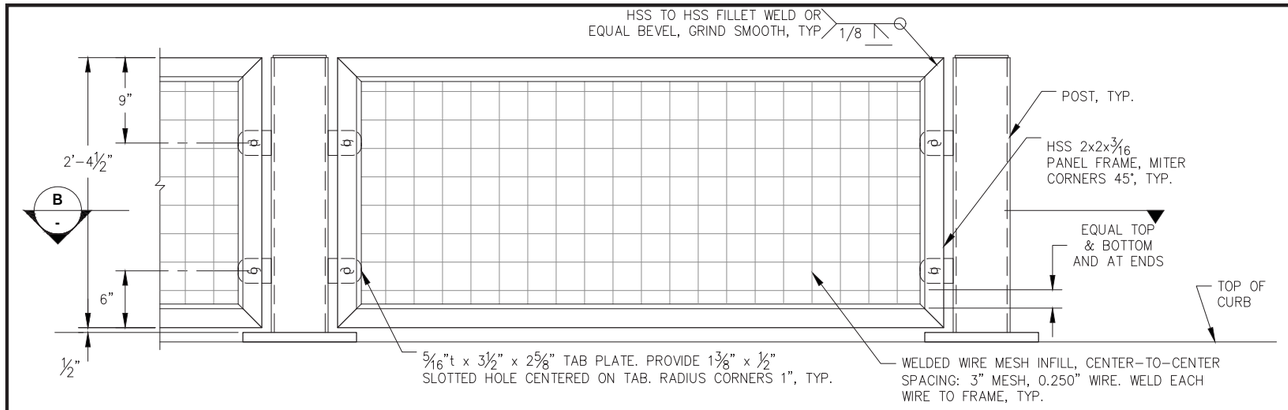

A - **TYPICAL RAILING PANEL FRAME ELEVATION**

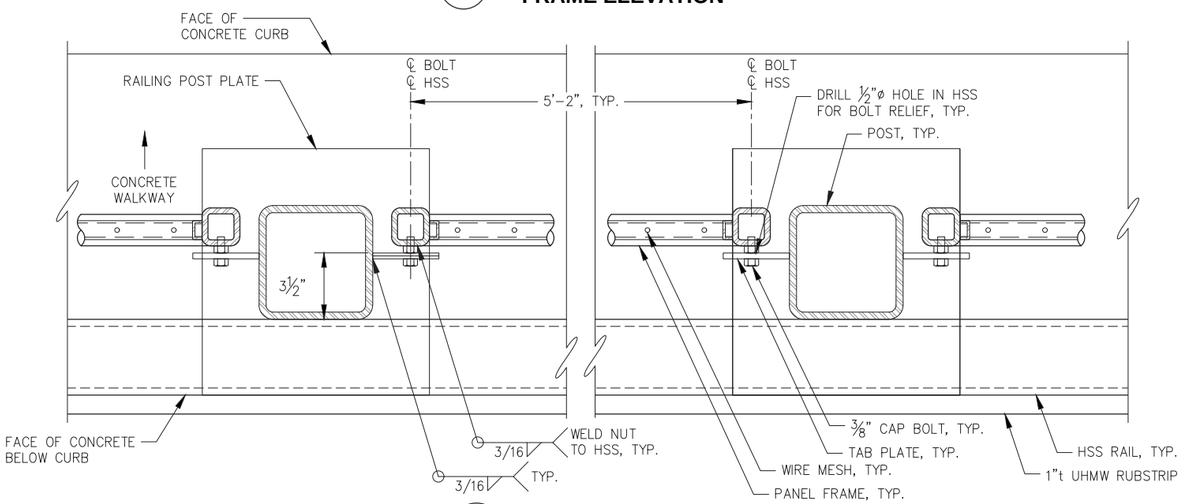

B - **PANEL FRAME CONNECTION DETAIL**

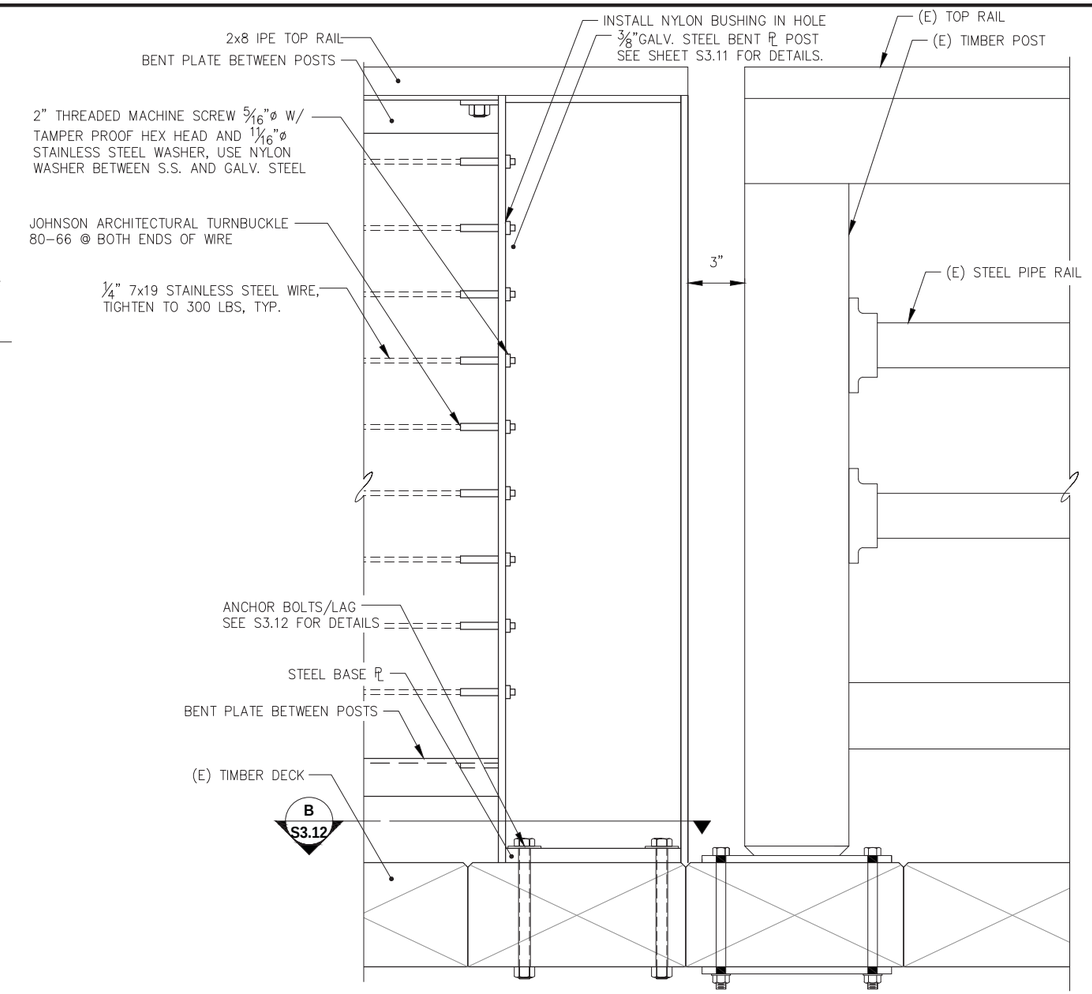

C S2.01 - **SEAWALK GUARDRAIL DETAILS**

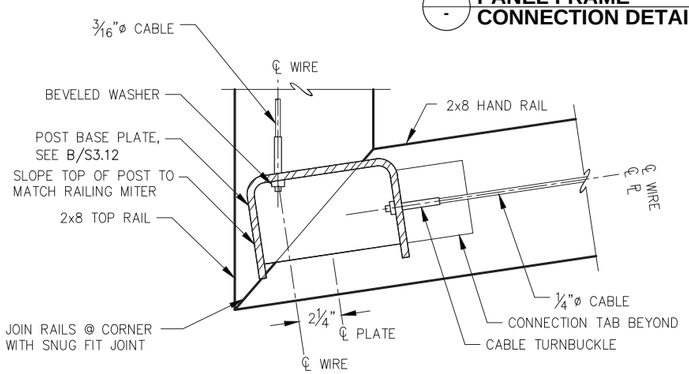

D S2.01 - **CORNER POST PLAN**

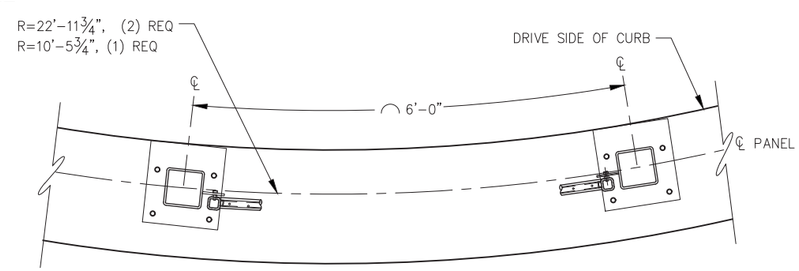

E - **PANEL FRAME CONNECTIN DETAIL**

NOTE: CONTRACTOR SHALL PROVIDE SHOP DRAWINGS OF PANEL FRAMES TO MATCH RADIUS OF CURB.

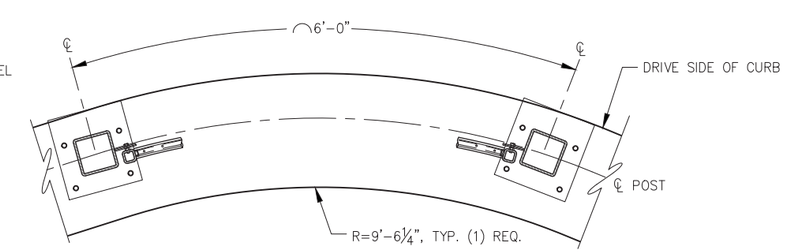

F - **PANEL FRAME CONNECTIN DETAIL**

NOTE: CONTRACTOR SHALL PROVIDE SHOP DRAWINGS OF PANEL FRAMES TO MATCH RADIUS OF CURB.

CITY & BOROUGH OF JUNEAU DOCKS & HARBORS

REVISIONS

REV.	DATE	DESCRIPTION	DWN.	CKD.	APP.

PND ENGINEERS, INC.
9360 Glacier Highway Ste 100
Juneau, Alaska 99801
Phone: 907-586-2093
Fax: 907-586-2099
www.pndengineers.com

DESIGN: MDS CHECKED: CRS
DRAWN: KLL APPROVED: CRS
SCALE: NTS

STATE OF ALASKA 49TH Charles R. Somerville CE-8845 REGISTERED PROFESSIONAL ENGINEER
DATE: 5/23/2019

DOWNTOWN WATERFRONT IMPROVEMENTS PHASE I
CBJ CONTRACT NO. DH19-014

SHEET TITLE: **MISCELLANEOUS RAILING DETAIL**

S2.12

PND PROJECT NO.: 182045 C.A.N. NO.: AECC250

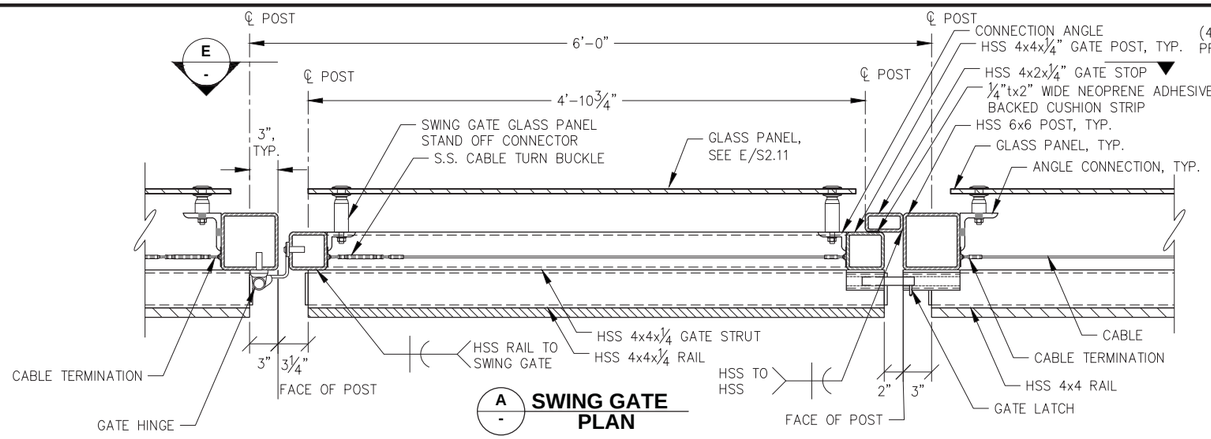

A SWING GATE PLAN

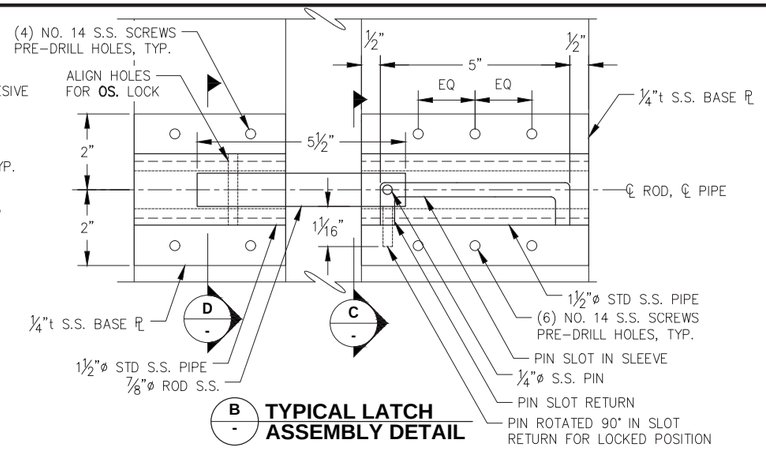

B TYPICAL LATCH ASSEMBLY DETAIL

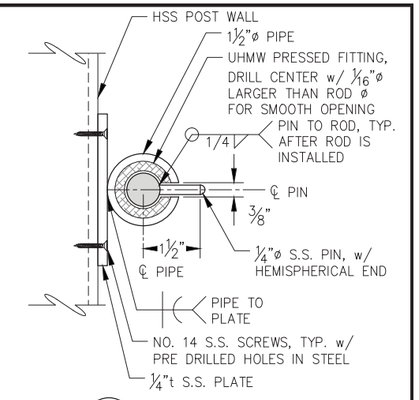

C ROD SLEEVE SECTION

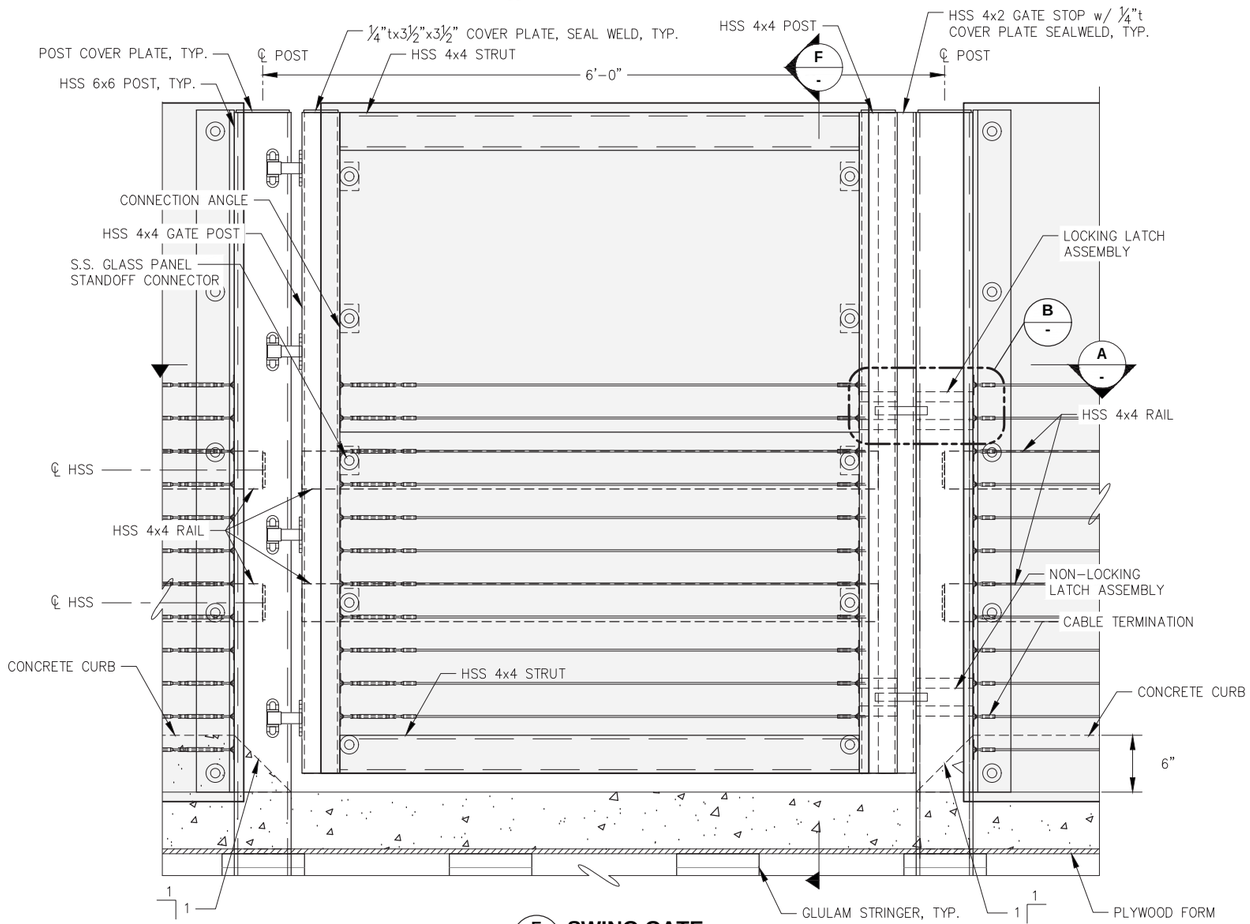

E SWING GATE ELEVATION

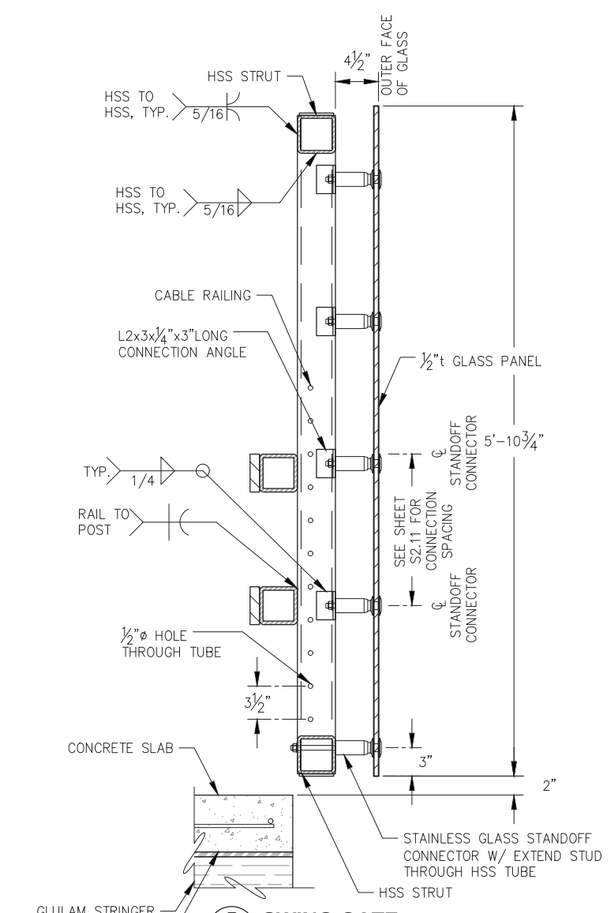

F SWING GATE SECTION

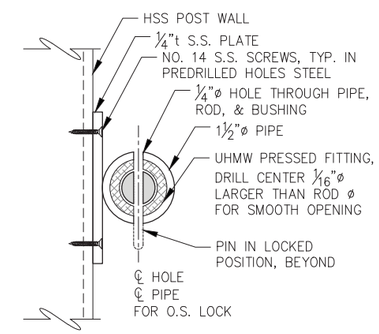

D ROD SLEEVE SECTION

NOTE:
1. FOR NON-LOCKING LATCH, NO HOLE REQUIRED ON RECEIVER SLEEVE.

2. CUT BUSHING TO MATCH STEEL PIPE SLOT @ BOTH ENDS OF SLOT, BUSHING MAY BE CUT AFTER INSTALLATION TO VERIFY ALIGNMENT.

CITY & BOROUGH OF JUNEAU — DOCKS & HARBORS

REVISIONS

REV.	DATE	DESCRIPTION	DWN.	CKD.	APP.

PND ENGINEERS, INC.
9360 Glacier Highway Ste 100
Juneau, Alaska 99801
Phone: 907-586-2093
Fax: 907-586-2099
www.pndengineers.com

DESIGN: MDS CHECKED: CRS
DRAWN: KLL APPROVED: CRS
SCALE: NTS

STATE OF ALASKA — 49TH — Charles R. Somerville — CE-8845 — REGISTERED PROFESSIONAL ENGINEER
DATE: 5/23/2019

DOWNTOWN WATERFRONT IMPROVEMENTS PHASE I
CBJ CONTRACT NO. DH19-014

SHEET TITLE:
SWING GATE PLAN, ELEVATION, AND SECTION

PND PROJECT NO.: 182045 C.A.N. NO.: AECC250

S2.13

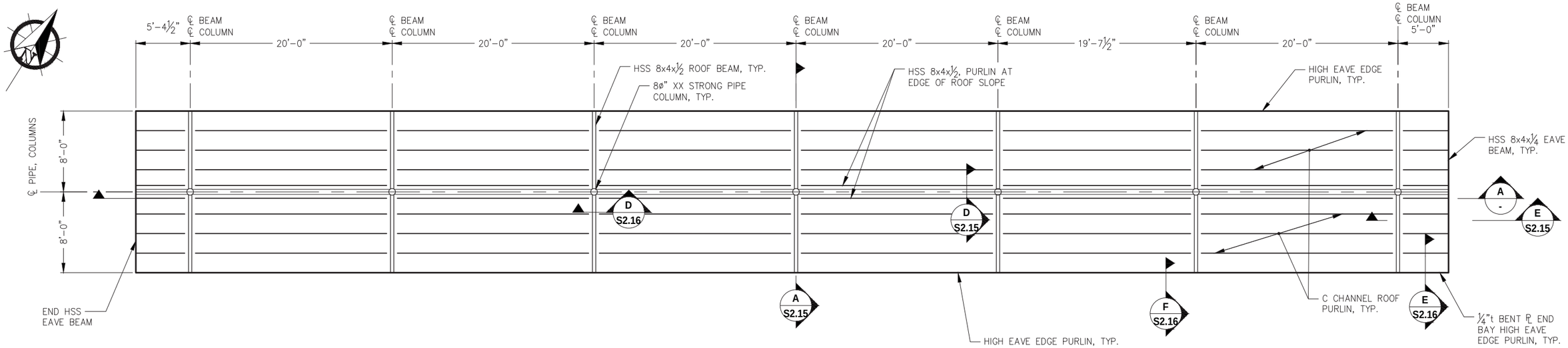

1 - **PARKING CANOPY ROOF FRAMING PLAN**

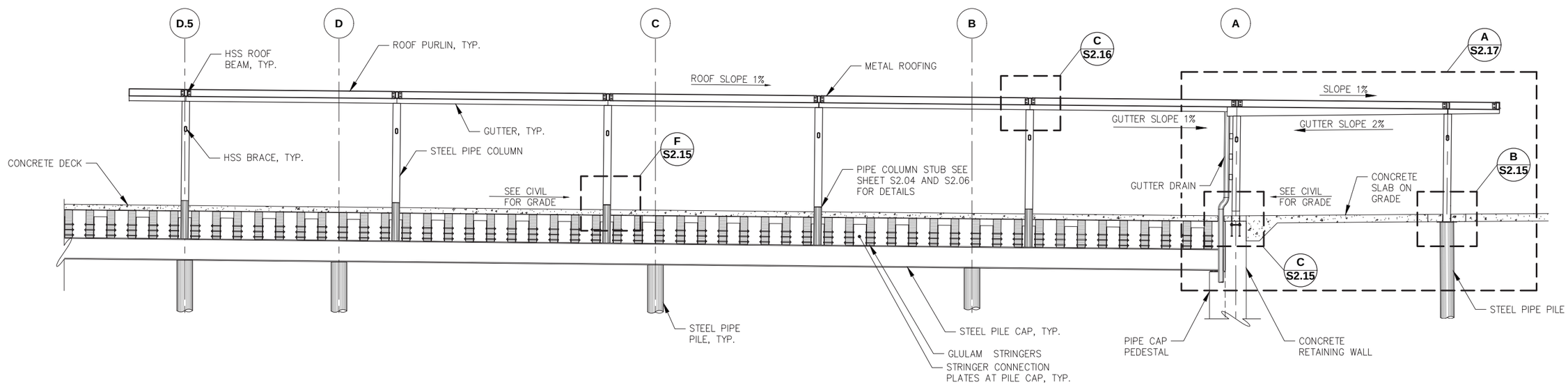

A - **PARKING CANOPY ELEVATION**

NOTE: SEE SHEET S2.04 FOR COLUMN ALIGNMENT w/ PILE CAP.

REVISIONS

REV.	DATE	DESCRIPTION	DWN.	CKD.	APP.

PND ENGINEERS, INC.
9360 Glacier Highway Ste 100
Juneau, Alaska 99801
Phone: 907-586-2093
Fax: 907-586-2099
www.pndengineers.com

DESIGN: MDS CHECKED: CRS
DRAWN: KLL APPROVED: CRS
SCALE: SCALE IN FEET 0 5 10 FT.

STATE OF ALASKA 49TH Charles R. Somerville CE-8845 REGISTERED PROFESSIONAL ENGINEER
DATE: 5/23/2019

DOWNTOWN WATERFRONT IMPROVEMENTS PHASE I
CBJ CONTRACT NO. DH19-014

SHEET TITLE: **PARKING CANOPY PLAN**

PND PROJECT NO.: 182045 C.A.N. NO.: AECC250

S2.14

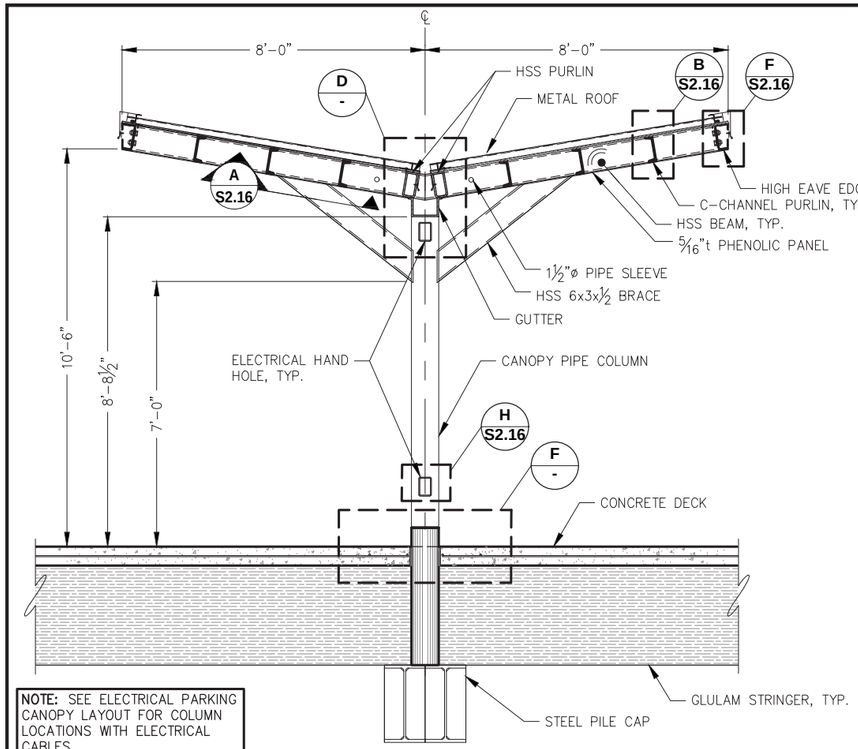

NOTE: SEE ELECTRICAL PARKING CANOPY LAYOUT FOR COLUMN LOCATIONS WITH ELECTRICAL CABLES

A S2.14 TYPICAL PARKING CANOPY SECTION

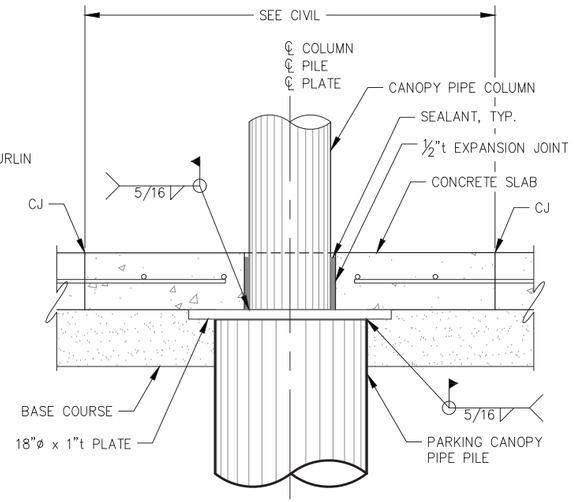

B S2.14 SHORE SIDE CANOPY CONCRETE COLLAR

(1 EA REQUIRED)

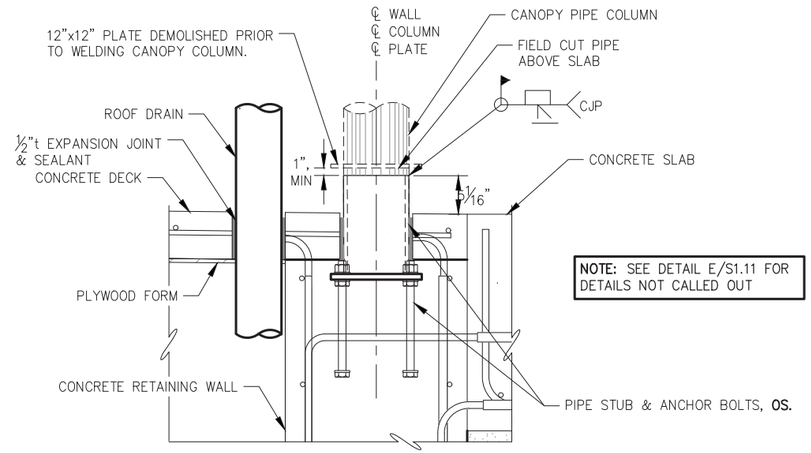

NOTE: SEE DETAIL E/S1.11 FOR DETAILS NOT CALLED OUT

C S2.14 COLUMN BASE CONNECTION DETAIL AT RETAINING WALL

(1 EA REQUIRED)

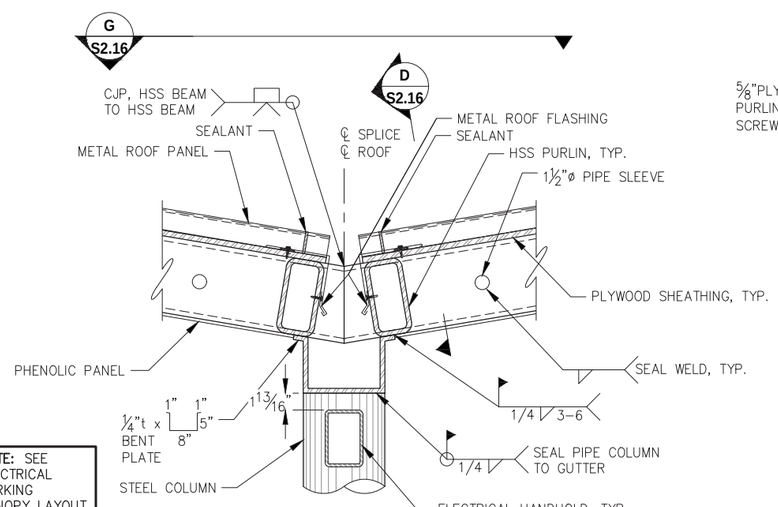

NOTE: SEE ELECTRICAL PARKING CANOPY LAYOUT FOR COLUMN LOCATIONS WITH ELECTRICAL CABLES

D S2.14 TYPICAL PARKING CANOPY ROOF BEAM AND GUTTER DETAIL

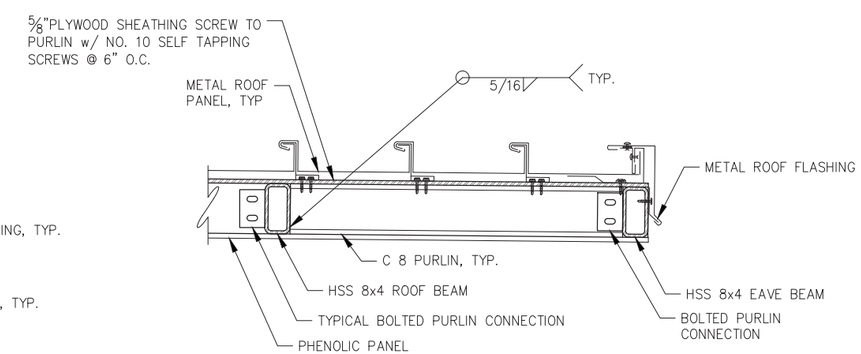

E S2.14 END EAVE DETAIL

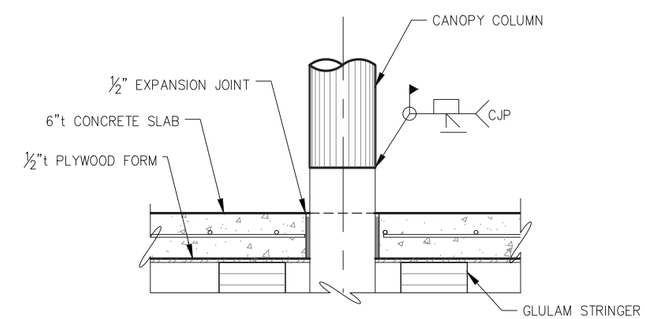

F - CANOPY COLUMN BASE CONNECTION DETAIL

REVISIONS

REV.	DATE	DESCRIPTION	DWN.	CKD.	APP.

P N D ENGINEERS, INC.
9360 Glacier Highway Ste 100
Juneau, Alaska 99801
Phone: 907-586-2093
Fax: 907-586-2099
www.pndengineers.com

DESIGN: MDS CHECKED: CRS
DRAWN: KLL APPROVED: CRS
SCALE: NTS
DATE: 5/23/2019

STATE OF ALASKA 49TH Charles R. Somerville CE-8845 REGISTERED PROFESSIONAL ENGINEER

DOWNTOWN WATERFRONT IMPROVEMENTS PHASE I
CBJ CONTRACT NO. DH19-014

SHEET TITLE: **PARKING CANOPY SECTIONS AND DETAILS**

PND PROJECT NO.: 182045 C.A.N. NO.: AECC250

S2.15

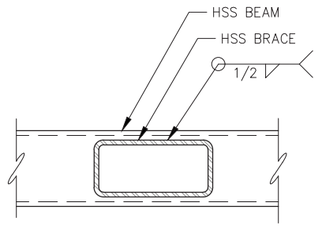

A S2.15 **TYPICAL CANOPY BRACE TO BEAM CONNECTION**

NOTE:
CONNECT BRACE COLUMN SIMILAR, NOTCH BRACES TO FORM TIGHT FIT w/ ROUND PIPE COLUMN.

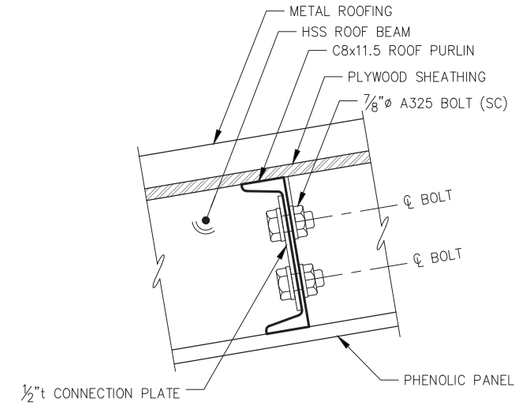

B S2.15 **TYPICAL ROOF PURLIN TO ROOF BEAM CONNECTION**

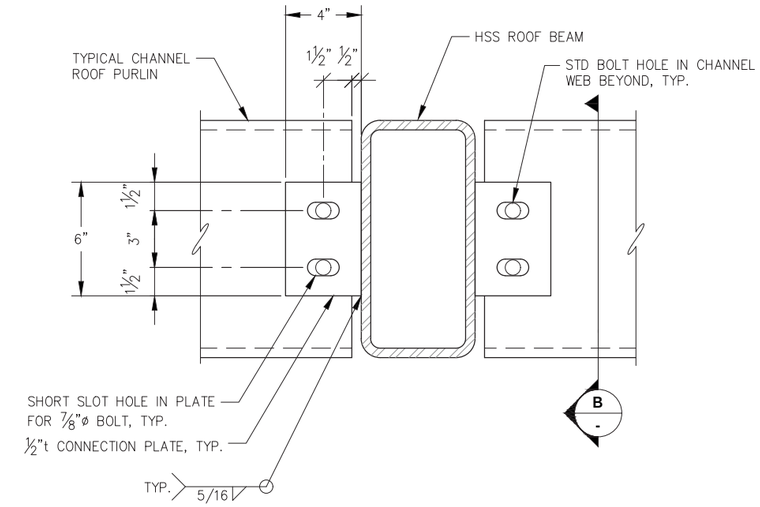

C S2.14 **TYPICAL ROOF PURLIN TO BEAM CONNECTION**

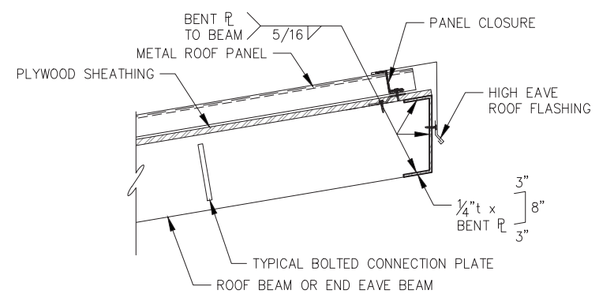

E S2.14 **ROOF EAVE SECTION AT END BAY PURLINS**

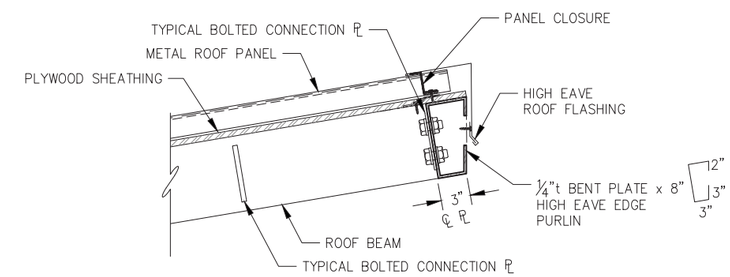

F S2.14 **TYPICAL HIGH EAVE ROOF SECTION**

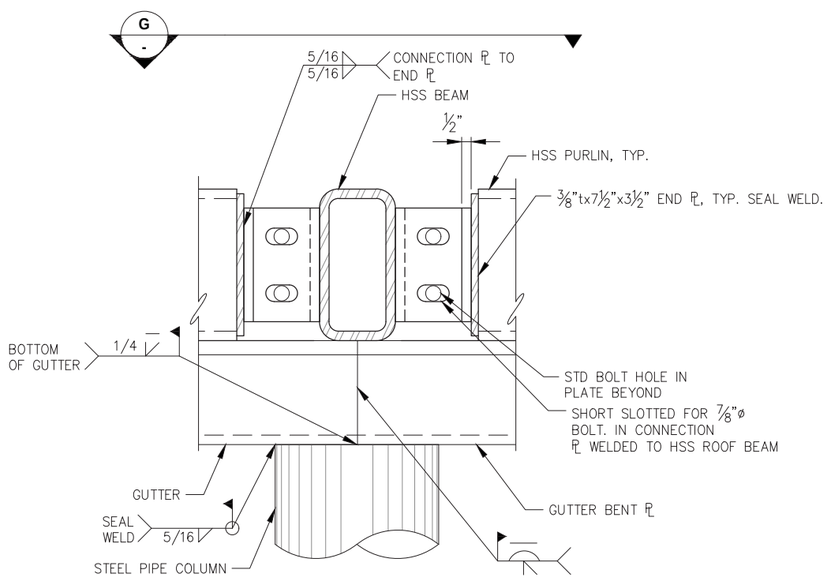

D S2.14 **TYPICAL GUTTER SPLICE AND HSS PURLIN CONNECTION**

NOTE:
1. CONTRACTOR TO LOCATE GUTTER FIELD SPLICE LOCATIONS. SPLICES SHALL BE LOCATED AT COLUMNS.
2. ALL HSS MEMBRANE SHALL HAVE ½"ø DRAIN HOLES AT LOWEST POINTS. DRAIN HOLES SHALL BE SHOWN ON SHOP DRAWINGS PRIOR TO FABRICATION.

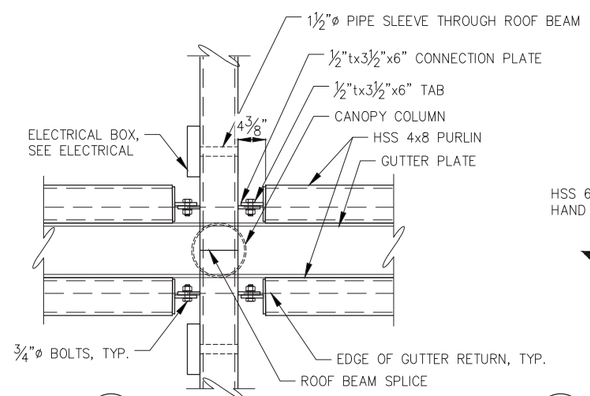

G - **CANOPY ELECTRICAL PARTIAL PLAN**

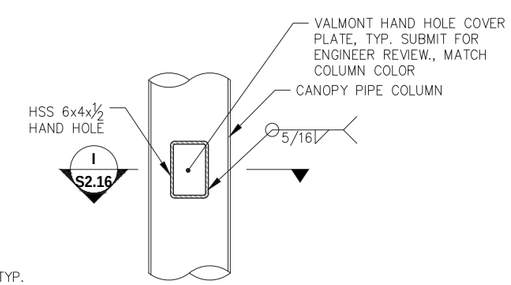

H - **TYPICAL ELECTRICAL HAND HOLE**

(3) REQ., TWO ON COLUMN ONE ON COLUMN STUB

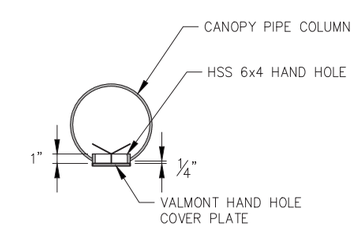

I - **ELECTRICAL HAND HOLE SECTION**

REVISIONS

REV.	DATE	DESCRIPTION	DWN.	CKD.	APP.

PND ENGINEERS, INC.
9360 Glacier Highway Ste 100
Juneau, Alaska 99801
Phone: 907-586-2093
Fax: 907-586-2099
www.pndengineers.com

STATE OF ALASKA 49TH Charles R. Somerville CE-8845 REGISTERED PROFESSIONAL ENGINEER
DATE: 5/23/2019

DESIGN: MDS CHECKED: CRS
DRAWN: KLL APPROVED: CRS
SCALE: NTS

DOWNTOWN WATERFRONT IMPROVEMENTS PHASE I
CBJ CONTRACT NO. DH19-014

SHEET TITLE: **PARKING CANOPY SECTIONS AND DETAILS**

PND PROJECT NO.: 182045 C.A.N. NO.: AECC250

S2.16

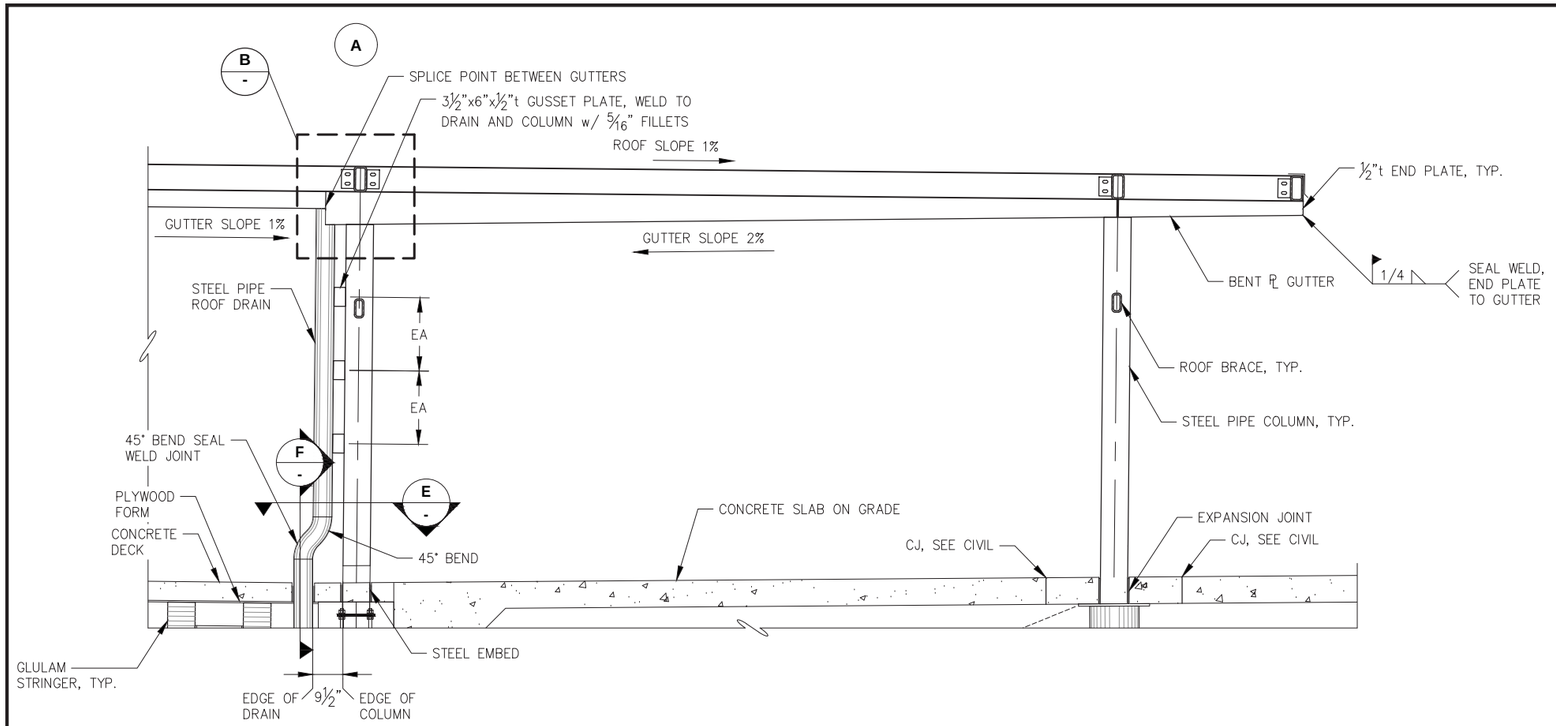

A S2.14 **CANOPY PARTIAL ELEVATION**

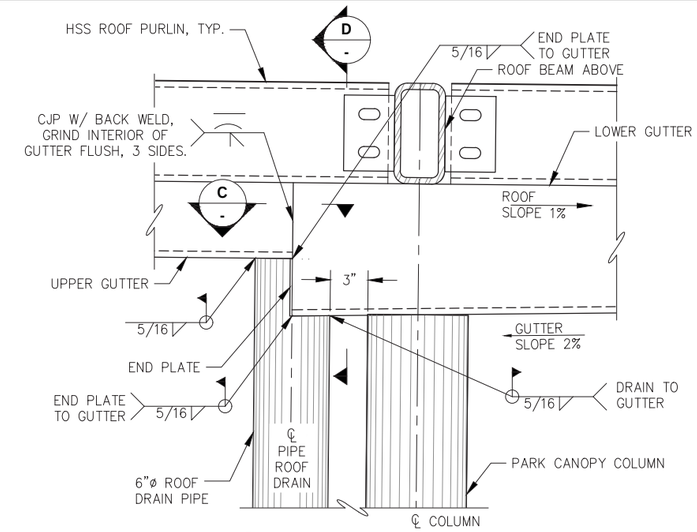

B - **GUTTER TO DRAIN DETAIL**

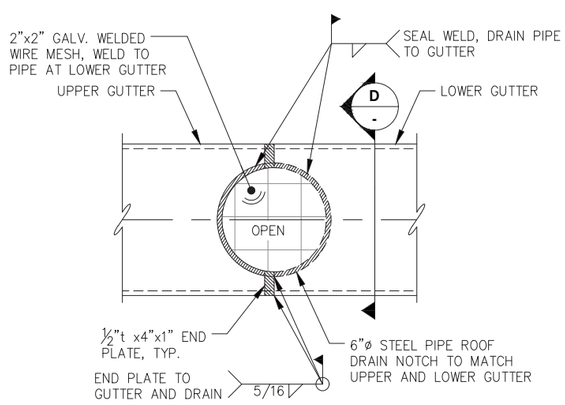

C - **GUTTER TO DRAIN SECTION**

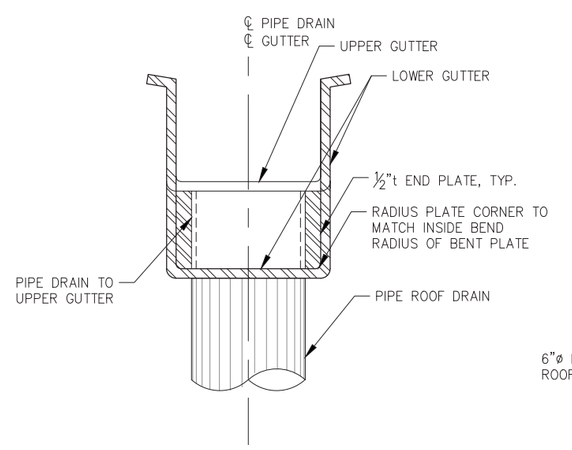

D - **GUTTER TO DRAIN SECTION**

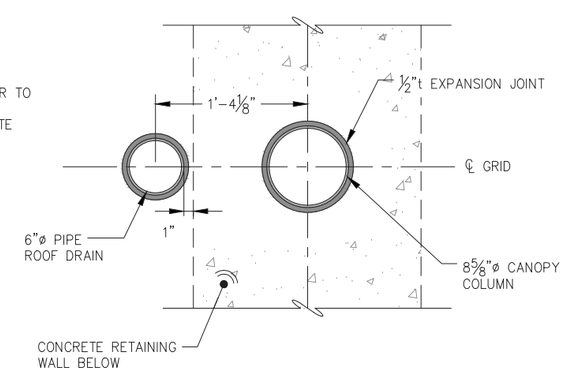

E - **PEDESTAL PLAN**

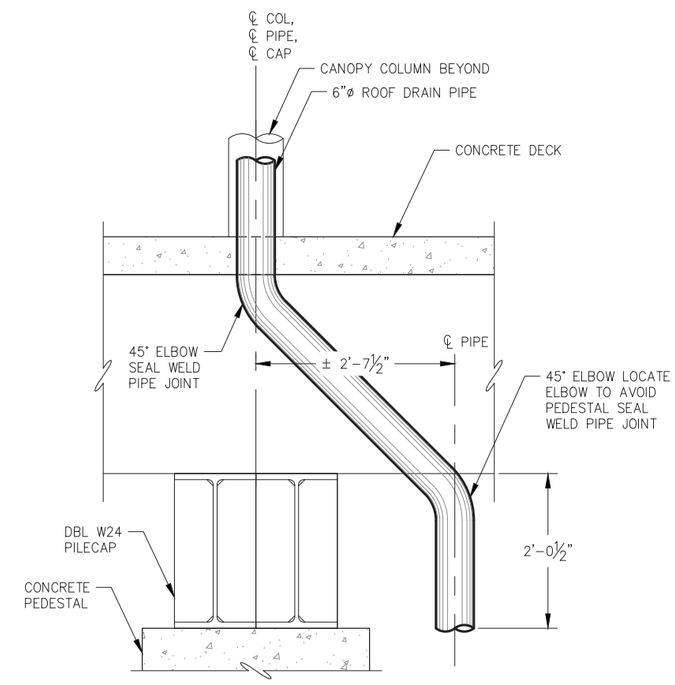

F - **PIPE DETAIL BELOW CONCRETE DECK**

REVISIONS

REV.	DATE	DESCRIPTION	DWN.	CKD.	APP.

PND ENGINEERS, INC.
9360 Glacier Highway Ste 100
Juneau, Alaska 99801
Phone: 907-586-2093
Fax: 907-586-2099
www.pndengineers.com

DESIGN: MDS CHECKED: CRS
DRAWN: KLL APPROVED: CRS
SCALE: NTS

STATE OF ALASKA 49TH Charles R. Somerville CE-8845 REGISTERED PROFESSIONAL ENGINEER
DATE: 5/23/2019

DOWNTOWN WATERFRONT IMPROVEMENTS PHASE I
CBJ CONTRACT NO. DH19-014

SHEET TITLE:
PARKING CANOPY SECTIONS AND DETAILS

PND PROJECT NO.: 182045 C.A.N. NO.: AECC250

S2.17

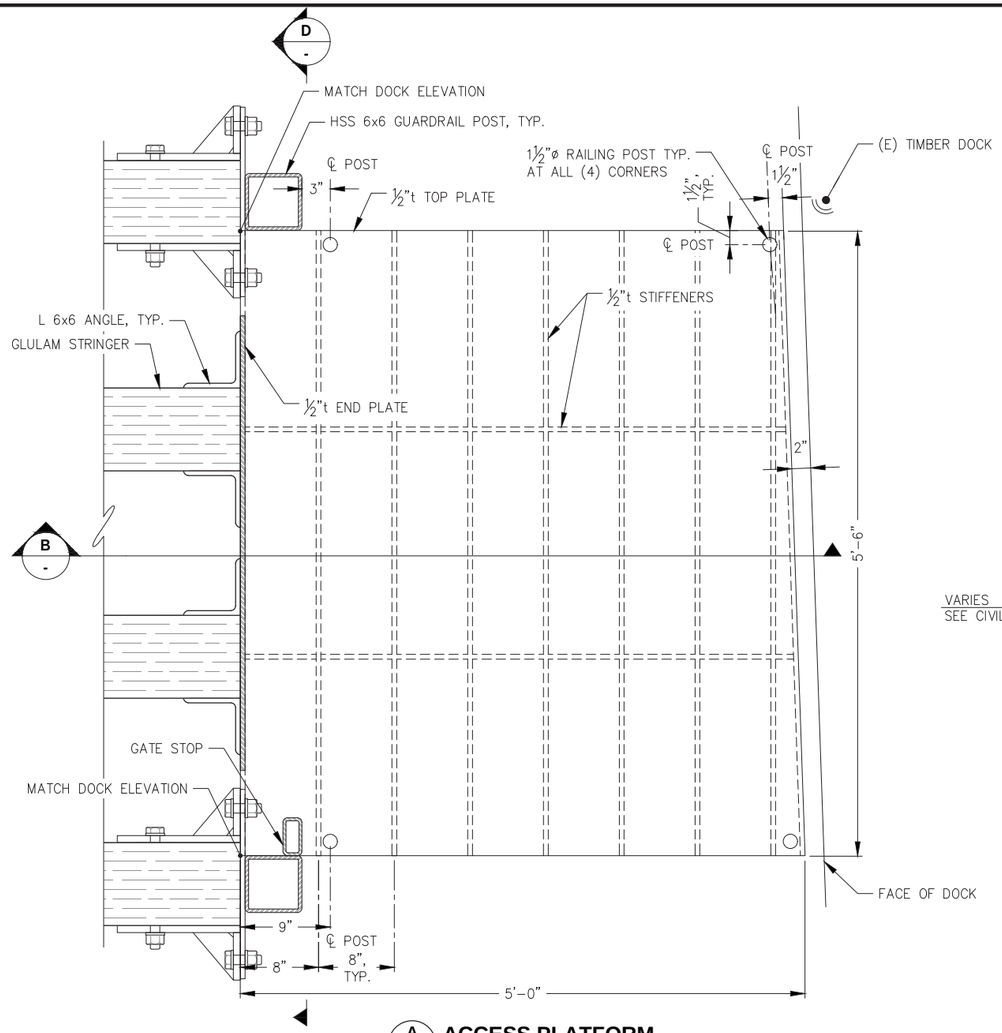

A ACCESS PLATFORM PLAN

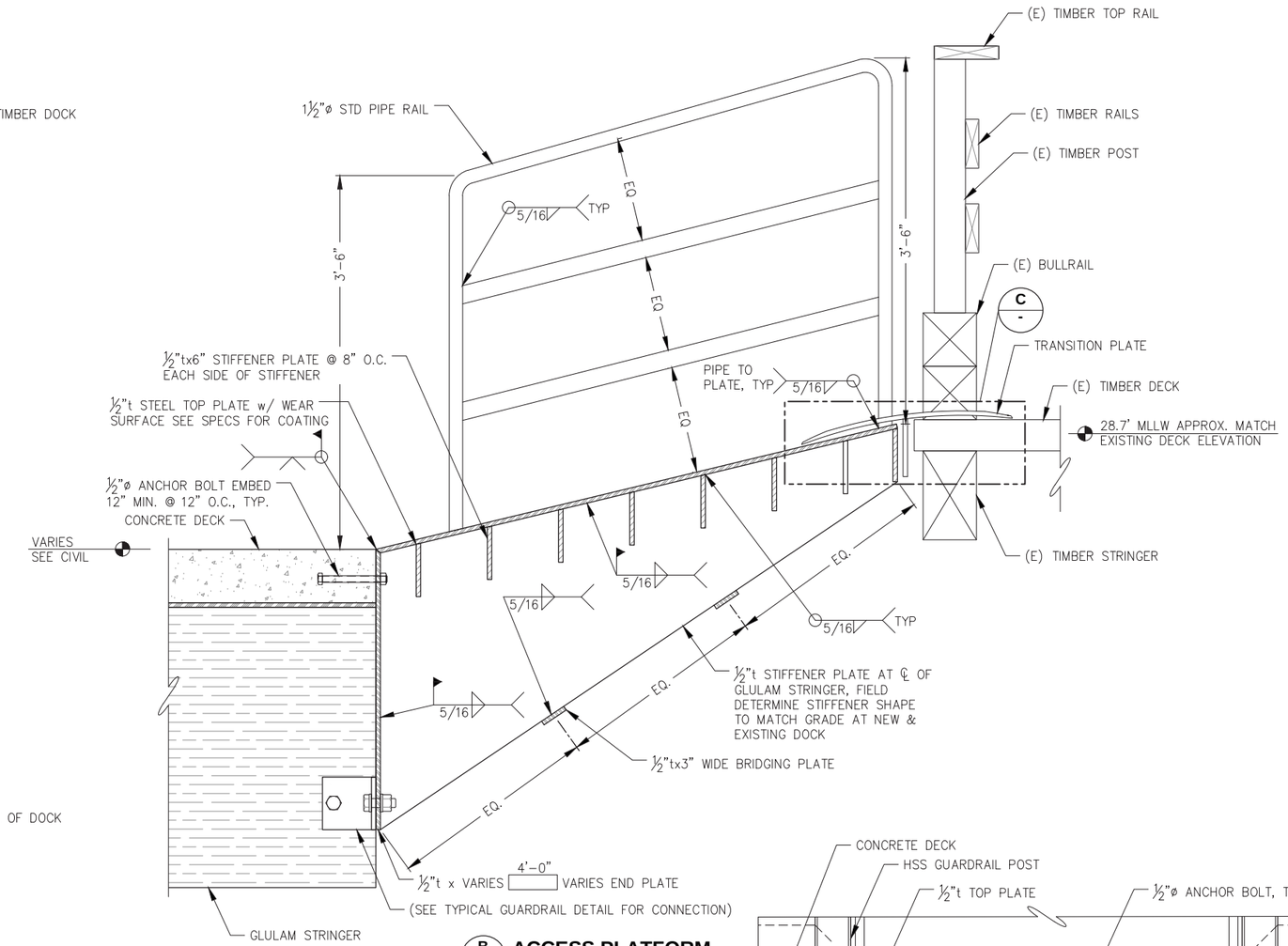

B ACCESS PLATFORM SECTION

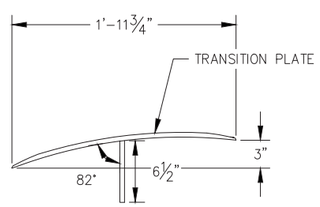

C TRANSITION PLATE DETAIL

NOTE: FOR DETAILS NOT CALLED OUT, SEE A/S1.15

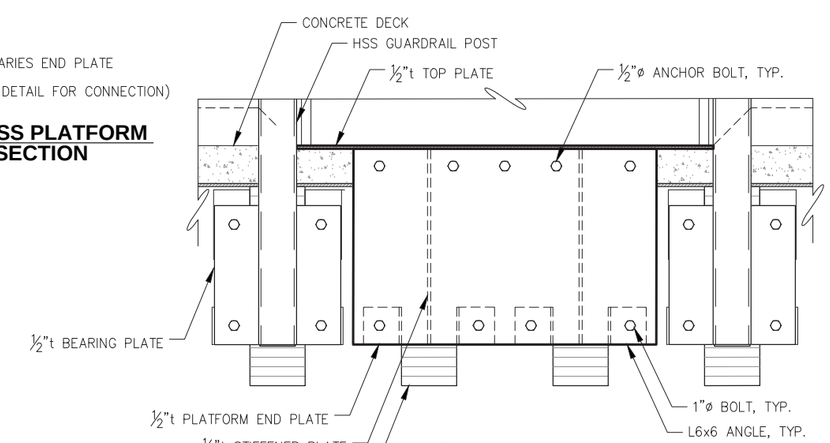

D PLATE FORM CORNER DETAIL

REVISIONS

REV.	DATE	DESCRIPTION	DWN.	CKD.	APP.

P | N | D ENGINEERS, INC.
9360 Glacier Highway Ste 100
Juneau, Alaska 99801
Phone: 907-586-2093
Fax: 907-586-2099
www.pndengineers.com

DESIGN: MDS CHECKED: CRS
DRAWN: KLL APPROVED: CRS
SCALE: NTS

STATE OF ALASKA 49TH Charles R. Somerville CE-8845 REGISTERED PROFESSIONAL ENGINEER
DATE: 5/23/2019

DOWNTOWN WATERFRONT IMPROVEMENTS PHASE I
CBJ CONTRACT NO. DH19-014

SHEET TITLE: **ACCESS PLATFORM**

PND PROJECT NO.: 182045 C.A.N. NO.: AECC250

S2.18

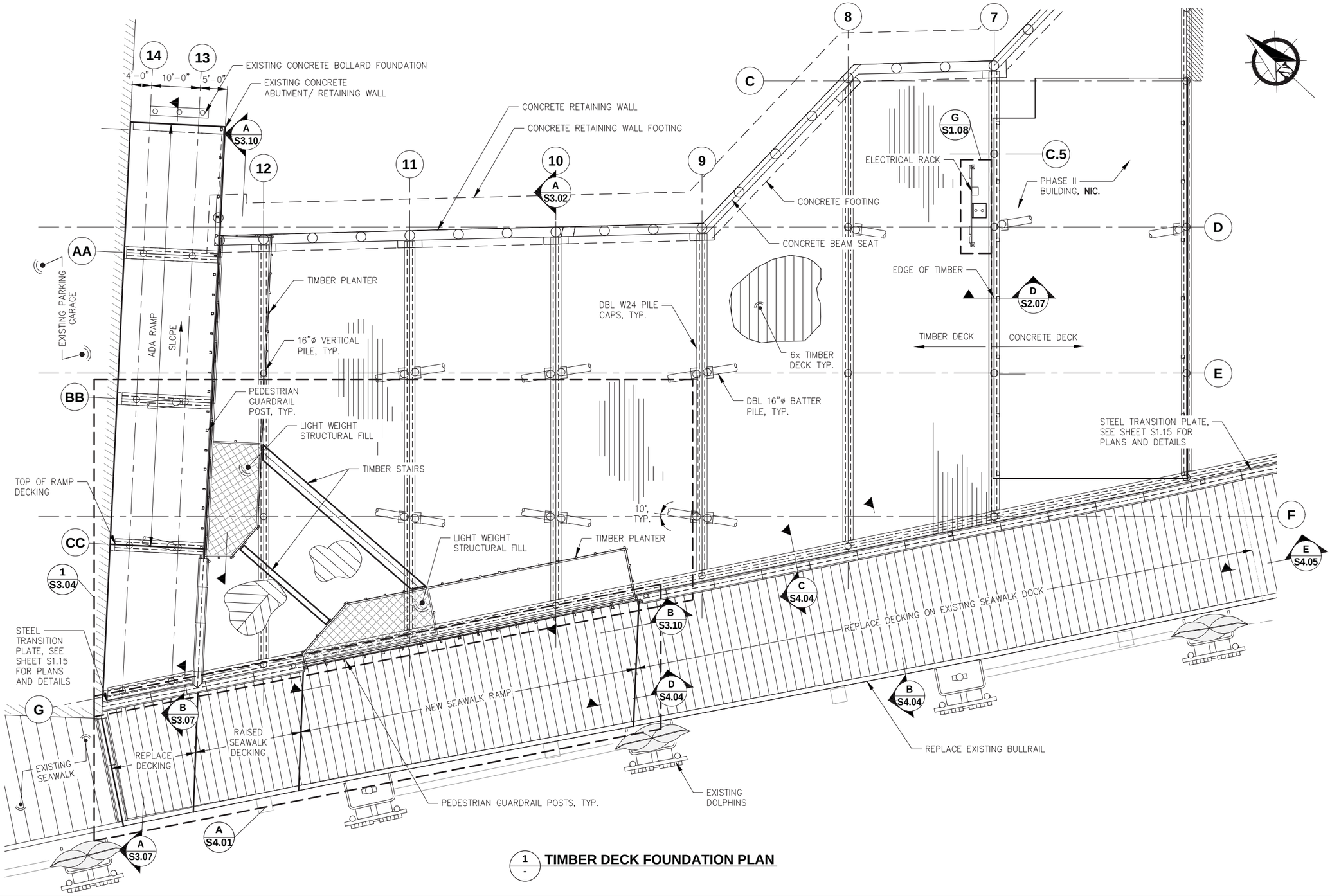

1 - **TIMBER DECK FOUNDATION PLAN**

CITY & BOROUGH OF JUNEAU DOCKS & HARBORS

REVISIONS

REV.	DATE	DESCRIPTION	DWN.	CKD.	APP.

PND ENGINEERS, INC.
9360 Glacier Highway Ste 100
Juneau, Alaska 99801
Phone: 907-586-2093
Fax: 907-586-2099
www.pndengineers.com

DESIGN: MDS CHECKED: CRS
DRAWN: KLL APPROVED: CRS
SCALE: SCALE IN FEET 0 10 20 FT.

STATE OF ALASKA 49TH Charles R. Somerville CE-8845 REGISTERED PROFESSIONAL ENGINEER
DATE: 5/23/2019

DOWNTOWN WATERFRONT IMPROVEMENTS PHASE I
CBJ CONTRACT NO. DH19-014

SHEET TITLE: **TIMBER DECK PARTIAL PLAN**

PND PROJECT NO.: 182045 C.A.N. NO.: AECC250

S3.01

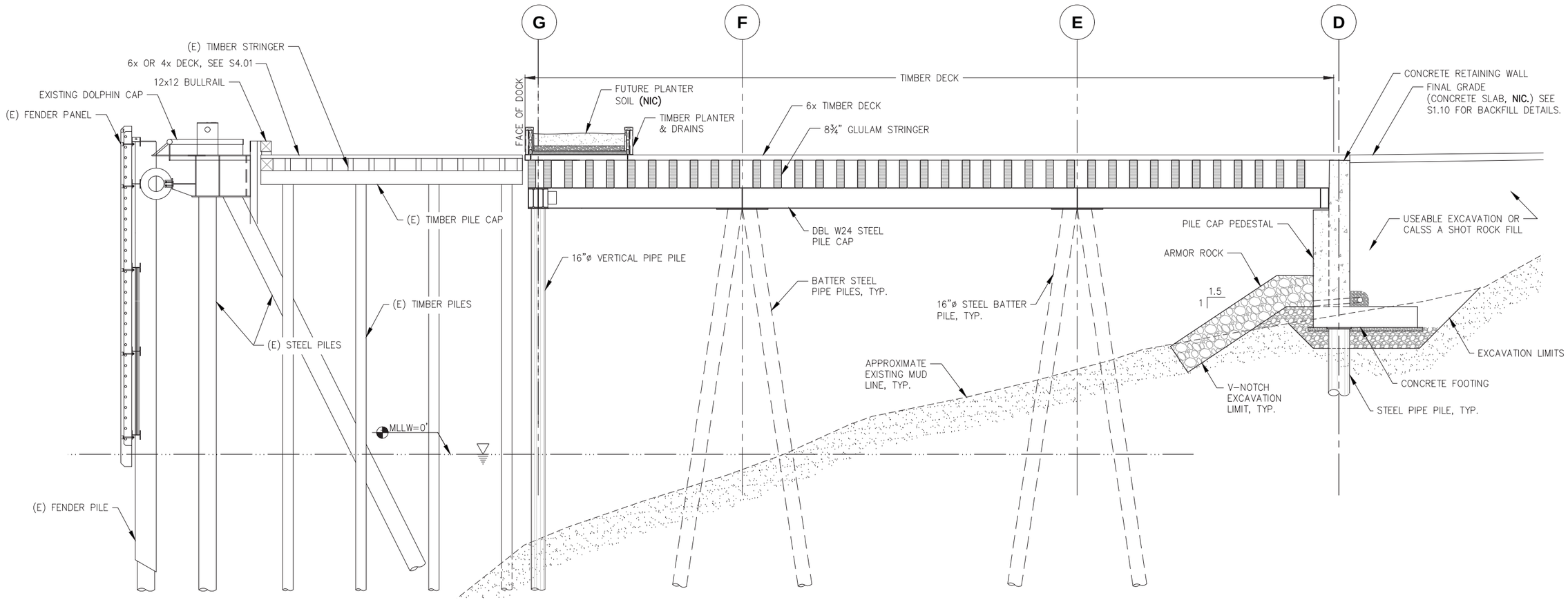

A S3.01 **TIMBER DECK SECTION AT GRID 10**

REVISIONS

REV.	DATE	DESCRIPTION	DWN.	CKD.	APP.

P N D ENGINEERS, INC.
9360 Glacier Highway Ste 100
Juneau, Alaska 99801
Phone: 907-586-2093
Fax: 907-586-2099
www.pndengineers.com

DESIGN: MDS CHECKED: CRS
DRAWN: KLL APPROVED: CRS
SCALE: SCALE IN FEET 0 5 10 FT.

STATE OF ALASKA 49TH Charles R. Somerville CE-8845 REGISTERED PROFESSIONAL ENGINEER
DATE: 5/23/2019

DOWNTOWN WATERFRONT IMPROVEMENTS PHASE I
CBJ CONTRACT NO. DH19-014

SHEET TITLE: **TIMBER DECK SECTION**

S3.02

PND PROJECT NO.: 182045 C.A.N. NO.: AECC250

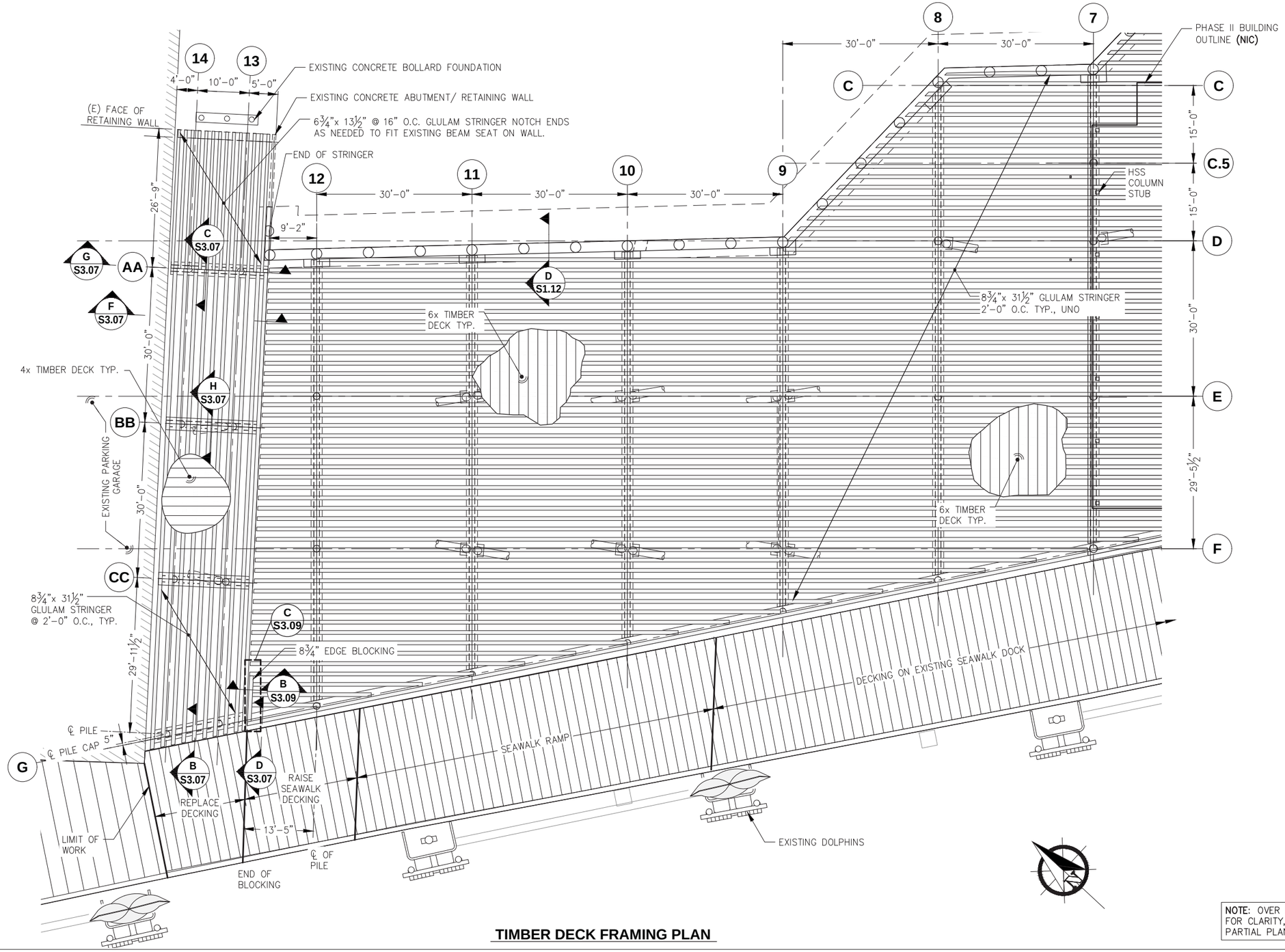

TIMBER DECK FRAMING PLAN

NOTE: OVER FRAMING NOT SHOWN THIS SHEET FOR CLARITY, SEE S3.04 FOR OVER FRAMING PARTIAL PLAN

REVISIONS

REV.	DATE	DESCRIPTION	DWN.	CKD.	APP.

P N D ENGINEERS, INC.
9360 Glacier Highway Ste 100
Juneau, Alaska 99801
Phone: 907-586-2093
Fax: 907-586-2099
www.pndengineers.com

DESIGN: MDS CHECKED: CRS
DRAWN: KLL APPROVED: CRS
SCALE: SCALE IN FEET 0 10 20 FT.

STATE OF ALASKA 49TH Charles R. Somerville CE-8845 REGISTERED PROFESSIONAL ENGINEER
DATE: 5/23/2019

DOWNTOWN WATERFRONT IMPROVEMENTS PHASE I
CBJ CONTRACT NO. DH19-014

SHEET TITLE: **TIMBER DECK FRAMING PLAN**

S3.03

PND PROJECT NO.: 182045 C.A.N. NO.: AECC250

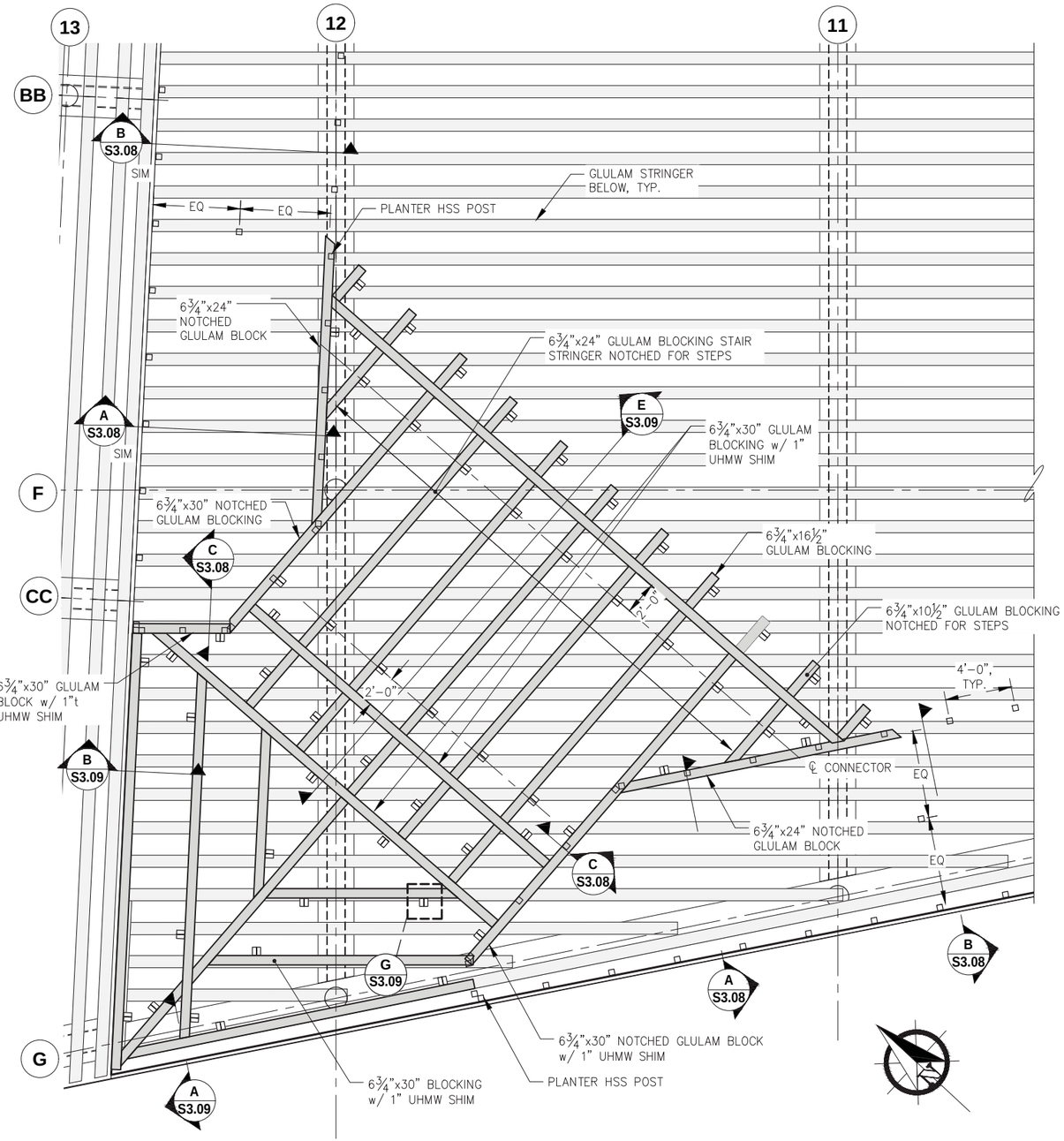

1 S3.01 **TIMBER DECK OVER FRAMING PLAN**

NOTE: ◫ INDICATES OVER FRAME CONNECTION BRACKET LOCATION
MEMBERS LESS THAN 4' LONG ONLY REQUIRE (1) CONNECTION BRACKET @ CENTER

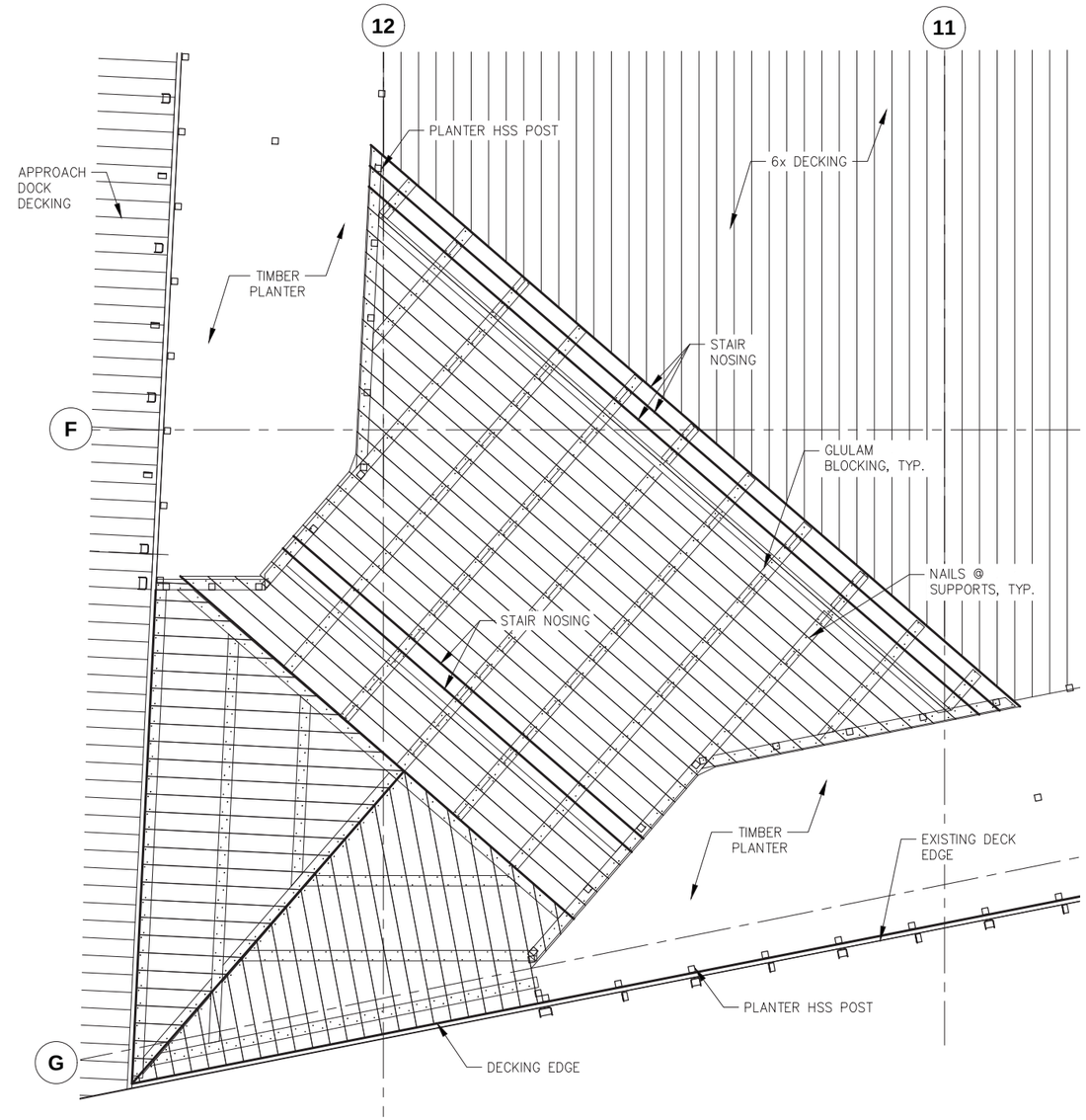

2 - **TIMBER DECKING PLAN**

NOTE: OVER FRAMING DECKING IS 4x TIMBER

REVISIONS

REV.	DATE	DESCRIPTION	DWN.	CKD.	APP.

P N D ENGINEERS, INC.
9360 Glacier Highway Ste 100
Juneau, Alaska 99801
Phone: 907-586-2093
Fax: 907-586-2099
www.pndengineers.com

DESIGN: MDS CHECKED: CRS
DRAWN: KLL APPROVED: CRS
SCALE: SCALE IN FEET 0 10 20 FT.

STATE OF ALASKA 49TH Charles R. Somerville CE-8845 REGISTERED PROFESSIONAL ENGINEER
DATE: 5/23/2019

DOWNTOWN WATERFRONT IMPROVEMENTS PHASE I
CBJ CONTRACT NO. DH19-014

SHEET TITLE: **TIMBER DECK OVER FRAMING**

PND PROJECT NO.: 182045 C.A.N. NO.: AECC250

S3.04

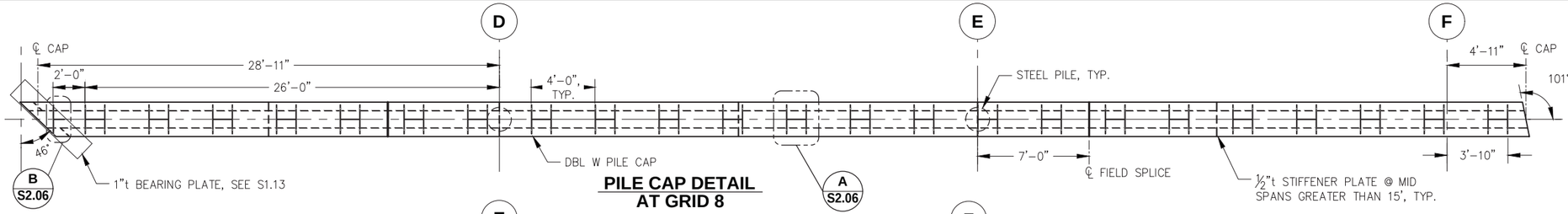

PILE CAP DETAIL AT GRID 8

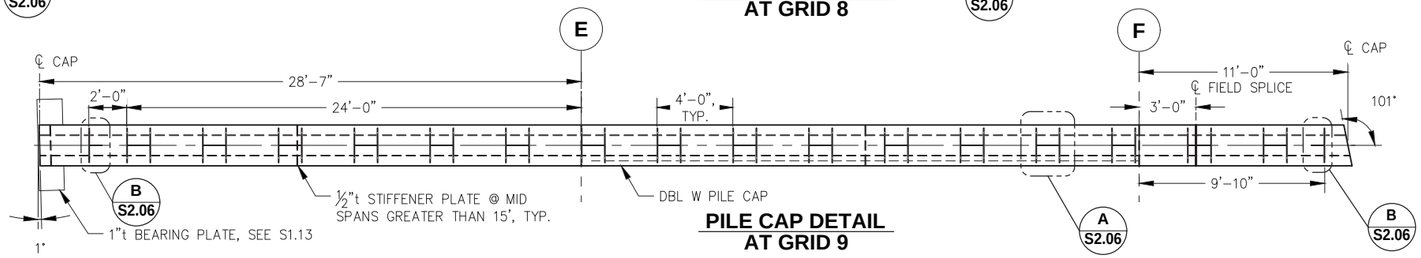

PILE CAP DETAIL AT GRID 9

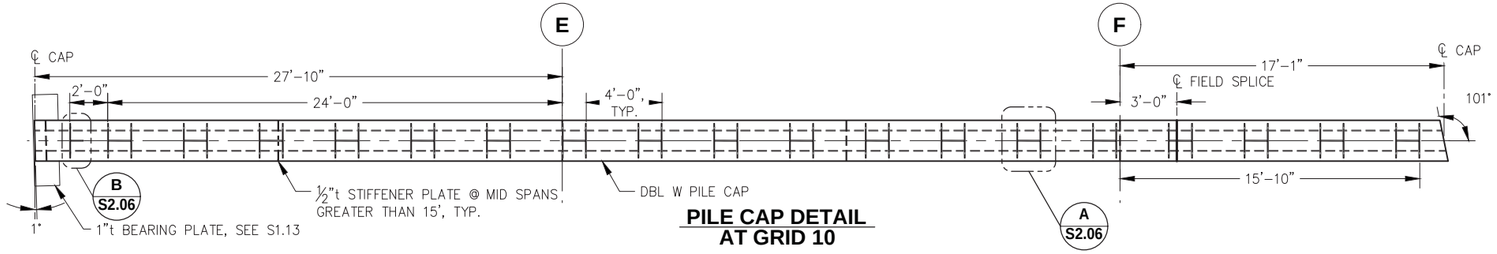

PILE CAP DETAIL AT GRID 10

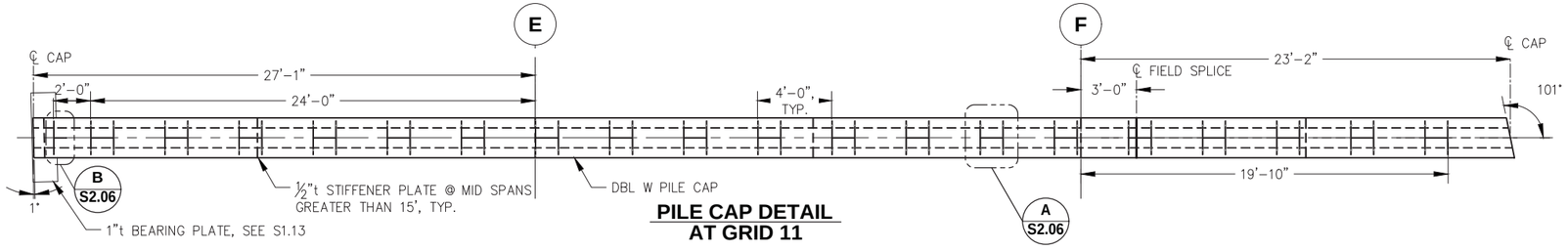

PILE CAP DETAIL AT GRID 11

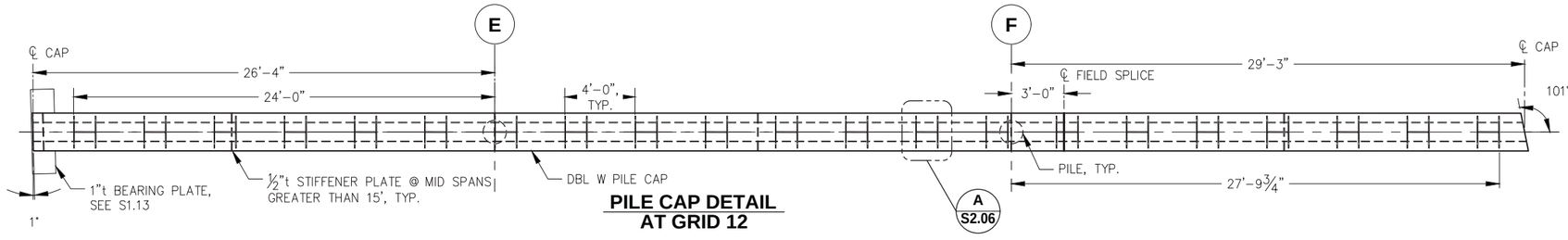

PILE CAP DETAIL AT GRID 12

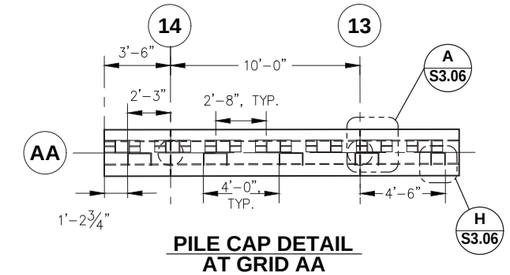

PILE CAP DETAIL AT GRID AA

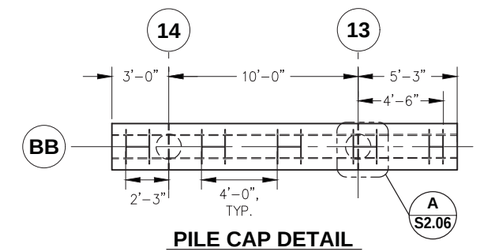

PILE CAP DETAIL AT GRID BB

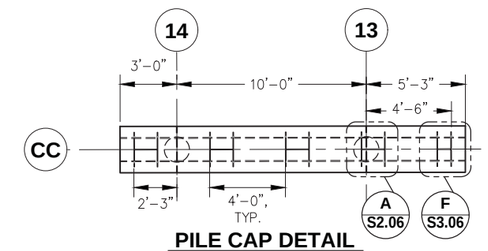

PILE CAP DETAIL AT GRID CC

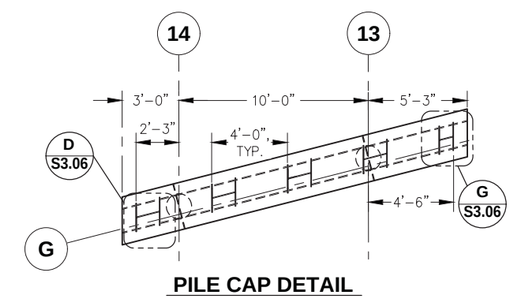

PILE CAP DETAIL AT GRID G

NOTE:
1. SHOP SPLICE AS REQUIRED FOR SECTIONS TO FIT IN GALVANIZING TANKS.
2. ALL PLATE DIMENSIONS ARE TO THE OUTSIDE OF SIDE PLATE, UNLESS NOTED OTHERWISE
3. ALL PILE CAPS ARE DBL W24x131, UNLESS OTHERWISE NOTED
4. ONE STIFFENER PLATE SHALL BE LOCATED AT ℄ EACH PILE, AND ONE PLATE AT MIDSPAN BETWEEN PILES AT PILE SPACING GREATER THAN 15' O.C.

CITY & BOROUGH OF JUNEAU — DOCKS & HARBORS

REVISIONS

REV.	DATE	DESCRIPTION	DWN.	CKD.	APP.

PND ENGINEERS, INC.
9360 Glacier Highway Ste 100
Juneau, Alaska 99801
Phone: 907-586-2093
Fax: 907-586-2099
www.pndengineers.com

DESIGN: MDS CHECKED: CRS
DRAWN: KLL APPROVED: CRS
SCALE: SCALE IN FEET 0 10 20 FT.

STATE OF ALASKA 49TH — Charles R. Somerville CE-8845 — REGISTERED PROFESSIONAL ENGINEER
DATE: 5/23/2019

DOWNTOWN WATERFRONT IMPROVEMENTS PHASE I
CBJ CONTRACT NO. DH19-014

SHEET TITLE: **PILE CAP PLAN**

PND PROJECT NO.: 182045 C.A.N. NO.: AECC250

S3.05

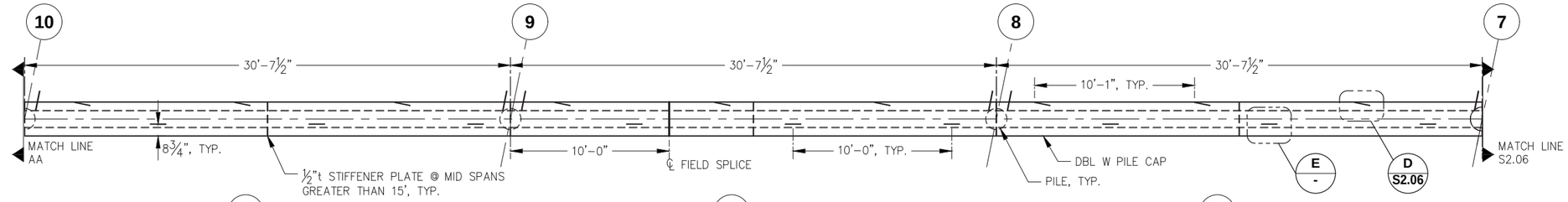

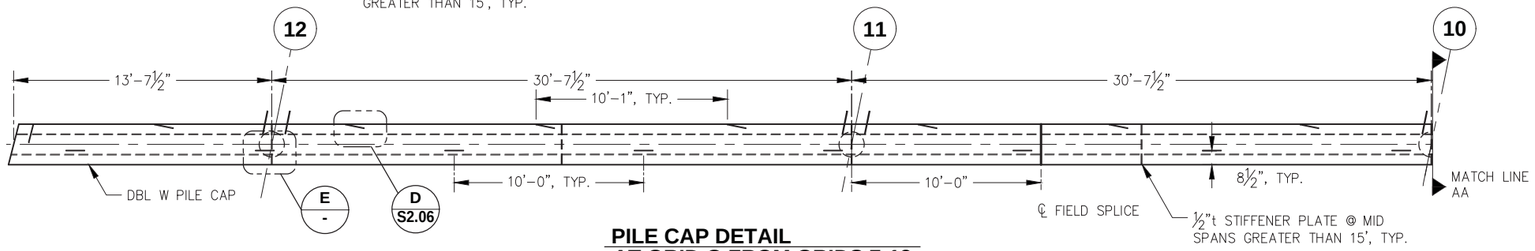

NOTE:
1. SHOP SPLICE AS REQUIRED FOR SECTIONS TO FIT IN GALVANIZING TANKS.
2. ALL PLATE DIMENSIONS ARE TO THE OUTSIDE OF SIDE PLATE, UNLESS NOTED OTHERWISE
3. ALL PILE CAPS ARE DBL W24x131, UNLESS OTHERWISE NOTED
4. ONE STIFFENER PLATE SHALL BE LOCATED AT ℄ EACH PILE, AND ONE PLATE AT MIDSPAN BETWEEN PILES AT PILE SPACING GREATER THAN 15' O.C.

PILE CAP DETAIL AT GRID G FROM GRIDS 7-12

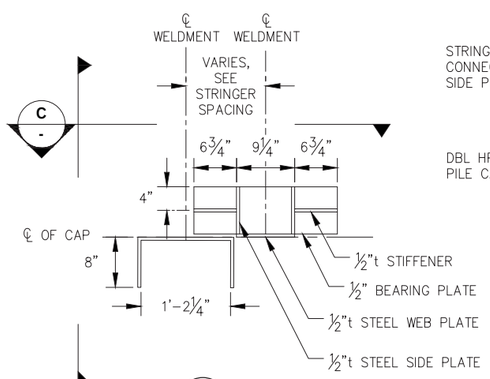

A - GRID AA PLAN

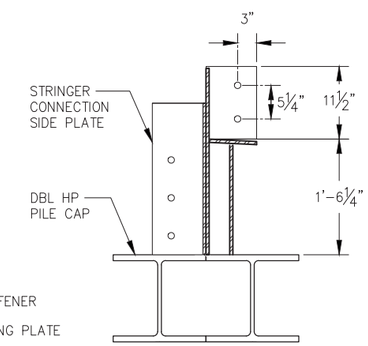

B - GRID AA CAP SECTION

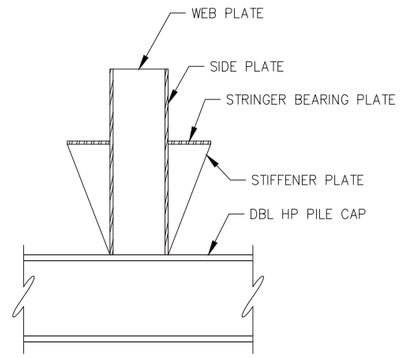

C - GRID AA CAP ELEVATION

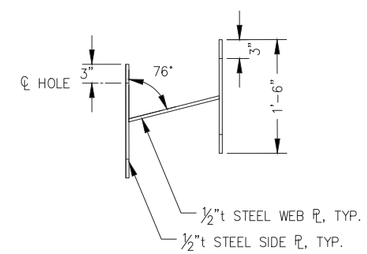

D - STRINGER CONNECTION

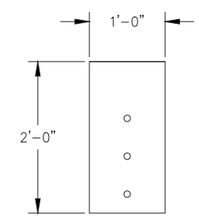

E - BLOCKING CONNECTION PLATE

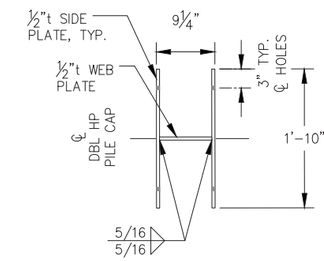

F - STRINGER CONNECTION

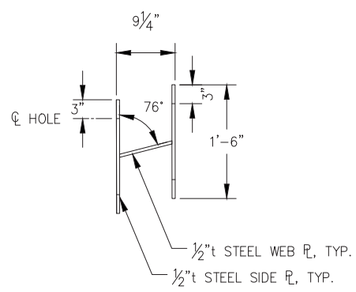

G - STRINGER CONNECTION

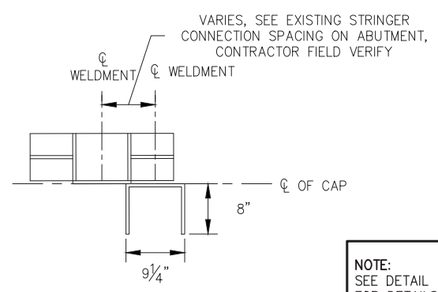

H - STRINGER CONNECTION

NOTE:
SEE DETAIL A - FOR DETAILS NOT CALLED OUT

REVISIONS

REV.	DATE	DESCRIPTION	DWN.	CKD.	APP.

PND ENGINEERS, INC.
9360 Glacier Highway Ste 100
Juneau, Alaska 99801
Phone: 907-586-2093
Fax: 907-586-2099
www.pndengineers.com

DESIGN: MDS CHECKED: CRS
DRAWN: KLL APPROVED: CRS
SCALE: SCALE IN FEET 0 10 20 FT.

STATE OF ALASKA 49TH Charles R. Somerville CE-8845 REGISTERED PROFESSIONAL ENGINEER
DATE: 5/23/2019

DOWNTOWN WATERFRONT IMPROVEMENTS PHASE I
CBJ CONTRACT NO. DH19-014

SHEET TITLE: **PILE CAP PLAN**

PND PROJECT NO.: 182045 C.A.N. NO.: AECC250

S3.06

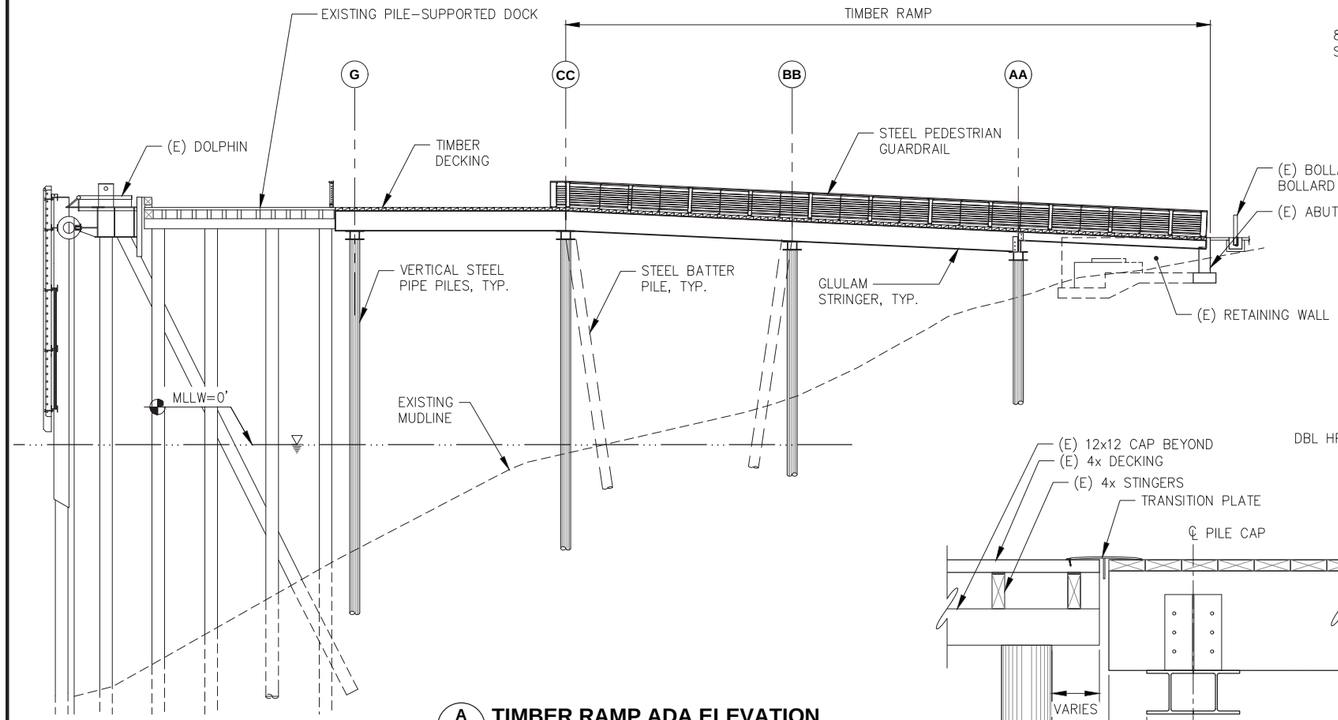

A S3.01 **TIMBER RAMP ADA ELEVATION**

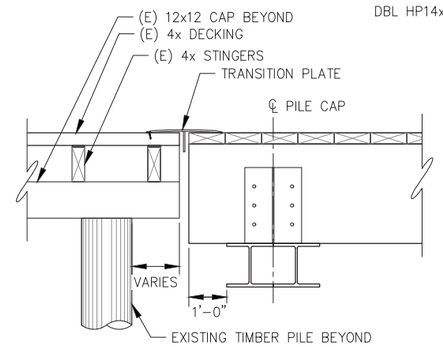

B S3.03 **DOCK SECTION AT RAMP AND SEAWALK, TYP.**

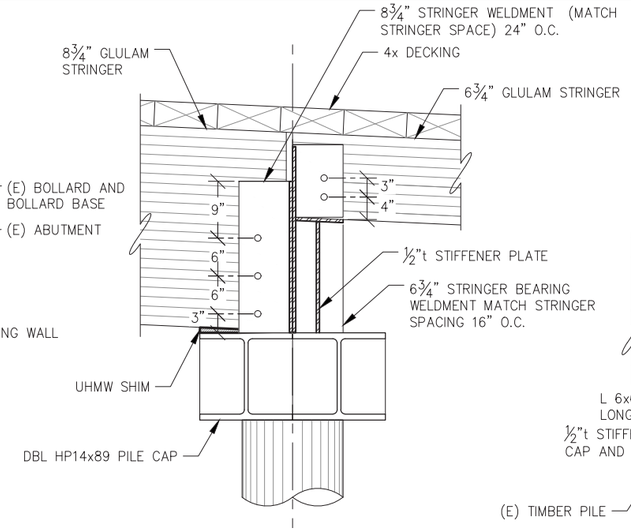

C - **RAMP PILE CAP DETAIL AT STRINGER CHANGE**

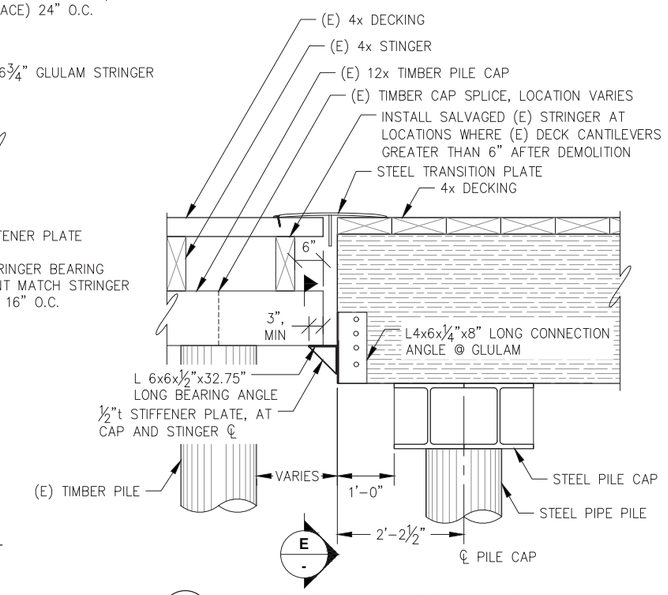

D S3.03 **APPROACH DOCK CONNECTION TO EXISTING PILE CAP DETAIL**

(3) REQUIRED, LOCATE AT EACH EXISTING PILE CAP.

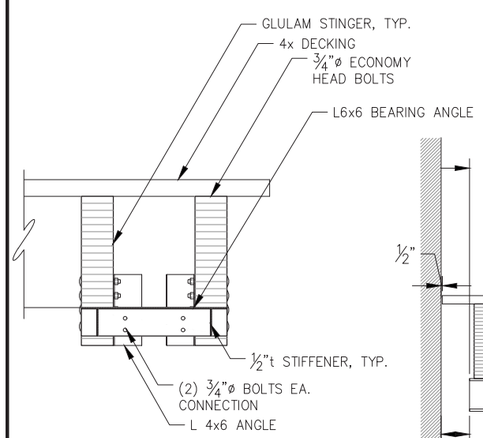

NOTE: LOCATE ANGLE FOR FULL BEARING OF EXITING PILE CAP ADJUST VERTICALLY AND HORIZONTALLY AS NEEDED.

E - **APPROACH DOCK CONNECTION TO EXISTING DETAIL**

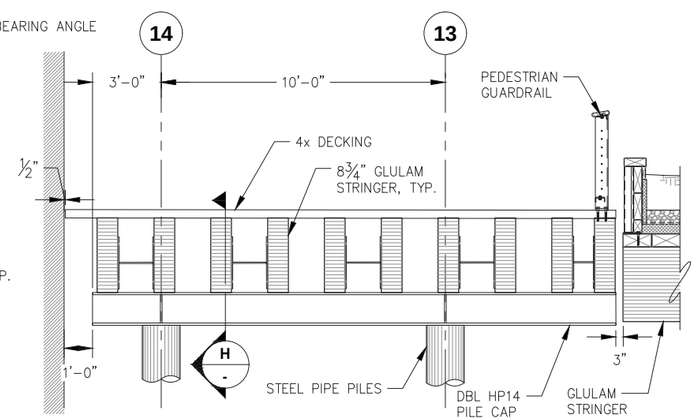

F S3.03 **RAMP SECTION AT 8 3/4" GLULAM BEAM**

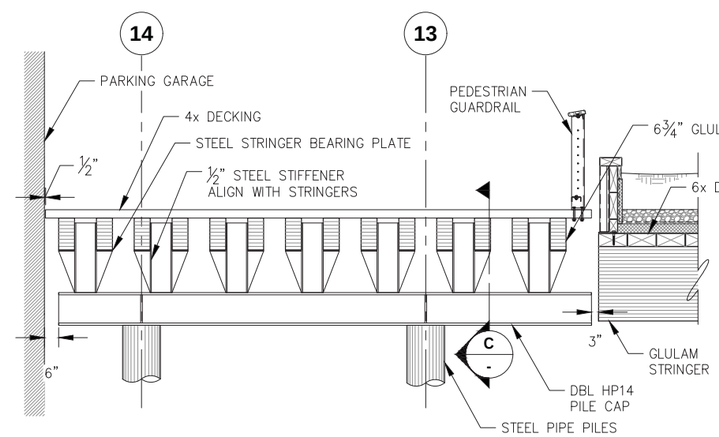

G S3.03 **RAMP SECTION AT 6 3/4" GLULAM BEAM**

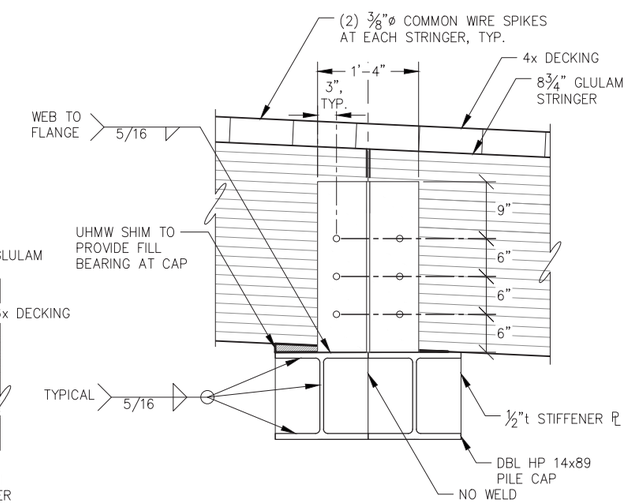

H S3.03 **TYPICAL RAMP PILE CAP SECTION**

REVISIONS

REV.	DATE	DESCRIPTION	DWN.	CKD.	APP.

P N D ENGINEERS, INC.
9360 Glacier Highway Ste 100
Juneau, Alaska 99801
Phone: 907-586-2093
Fax: 907-586-2099
www.pndengineers.com

DESIGN: MDS CHECKED: CRS
DRAWN: KLL APPROVED: CRS
SCALE: SCALE IN FEET 0 10 20 FT.

STATE OF ALASKA 49TH Charles R. Somerville CE-8845 REGISTERED PROFESSIONAL ENGINEER
DATE: 5/23/2019

DOWNTOWN WATERFRONT IMPROVEMENTS PHASE I
CBJ CONTRACT NO. DH19-014

SHEET TITLE: **ADA APPROACH RAMP ELEVATION AND SECTION**

PND PROJECT NO.: 182045 C.A.N. NO.: AECC250

S3.07

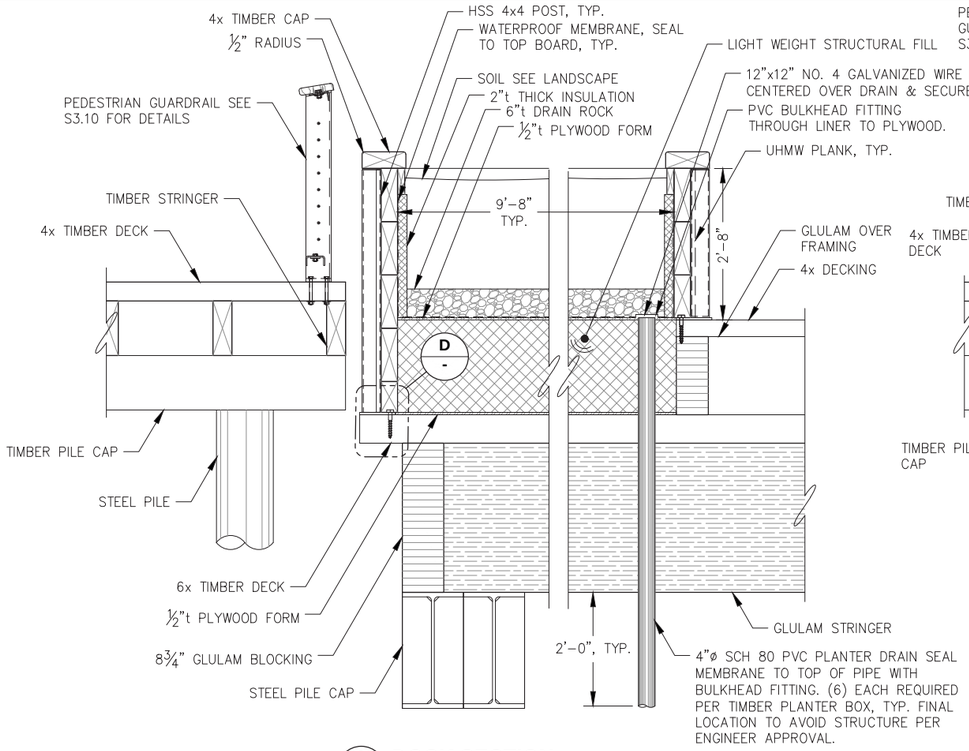

A S3.04 **DOCK SECTION AT WITH LIGHT WEIGHT FILL**

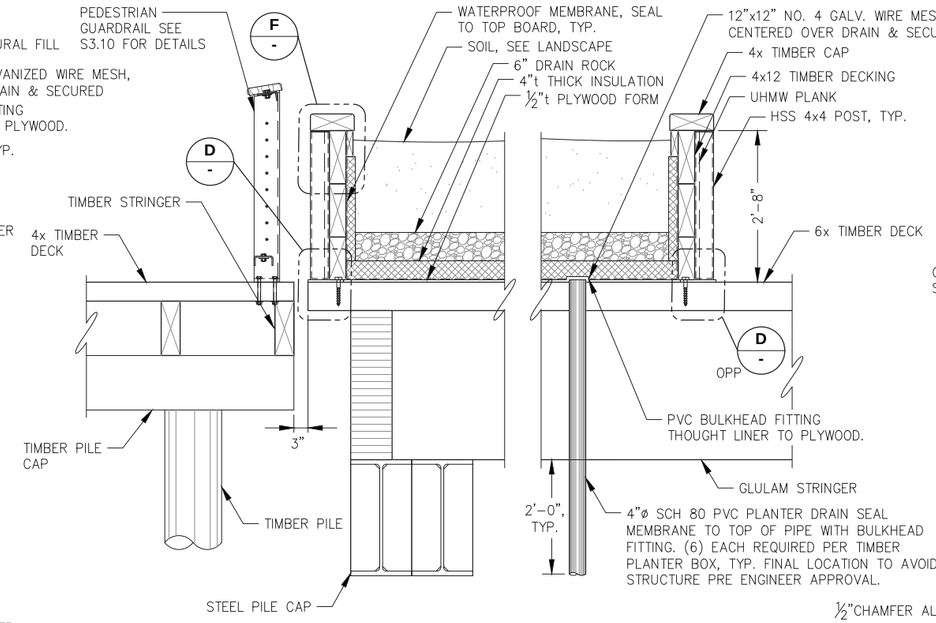

B S3.04 **DOCK SECTION AT SEA WALK RAMP**

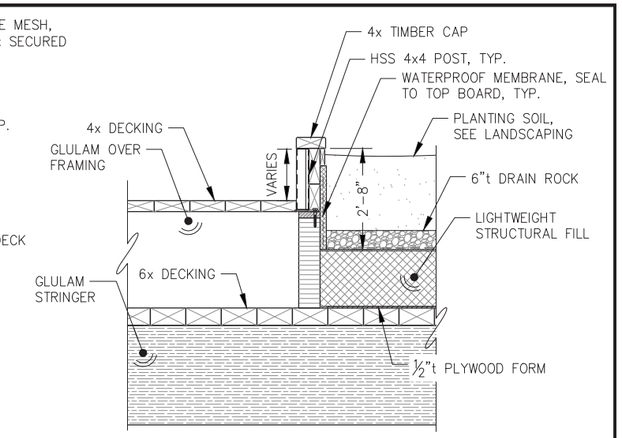

C S3.04 **PLANTER SECTION THROUGH OVER FRAMING**

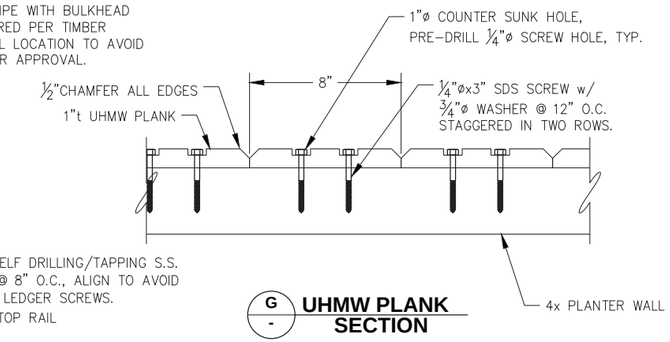

G - **UHMW PLANK SECTION**

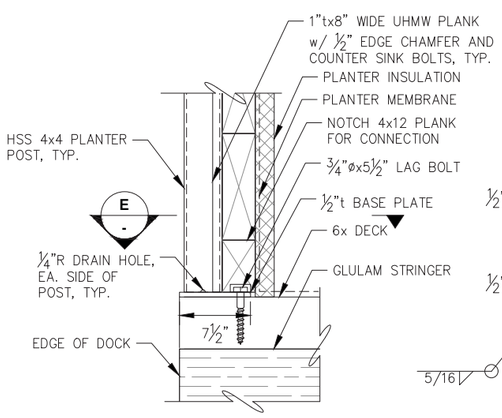

D - **PLANTER POST CONNECTION**

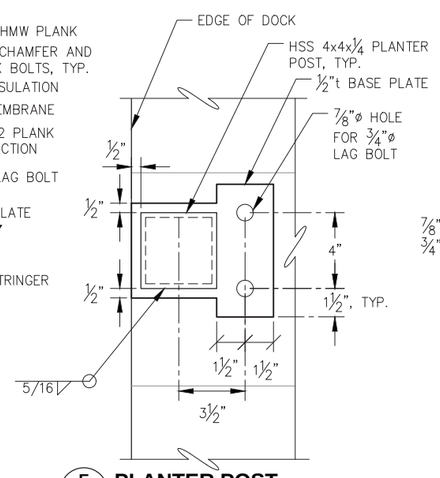

E - **PLANTER POST BASE PLATE DETAIL**

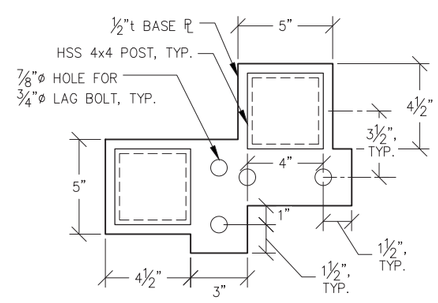

G - **PLANTER POST BASE PLATE AT CORNER**

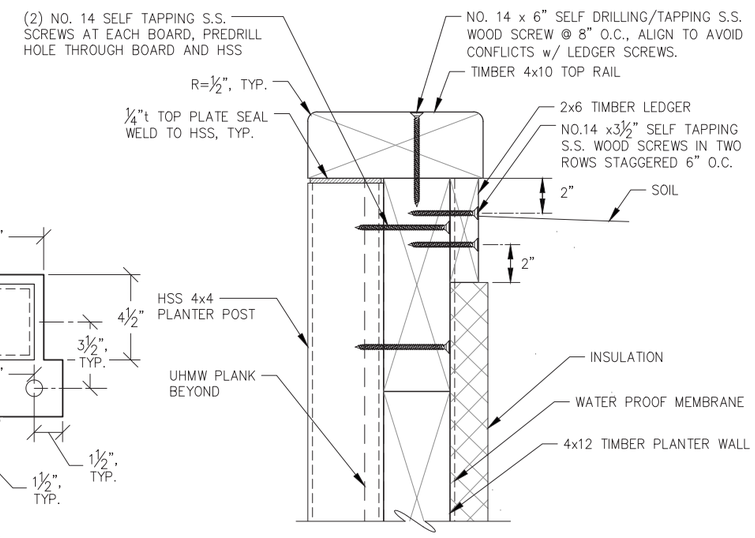

F - **TOP OF PLANTER WALL DETAIL**

NOTE: PLANTER WALL NOT SHOWN FOR CLARITY

REVISIONS

REV.	DATE	DESCRIPTION	DWN.	CKD.	APP.

PND ENGINEERS, INC.
9360 Glacier Highway Ste 100
Juneau, Alaska 99801
Phone: 907-586-2093
Fax: 907-586-2099
www.pndengineers.com

DESIGN: MDS CHECKED: CRS
DRAWN: KLL APPROVED: CRS
SCALE: NTS

STATE OF ALASKA 49TH Charles R. Somerville CE-8845 REGISTERED PROFESSIONAL ENGINEER
DATE: 5/23/2019

DOWNTOWN WATERFRONT IMPROVEMENTS PHASE I
CBJ CONTRACT NO. DH19-014

SHEET TITLE: **TIMBER DECK SECTIONS AND DETAILS**

S3.08

PND PROJECT NO.: 182045 C.A.N. NO.: AECC250

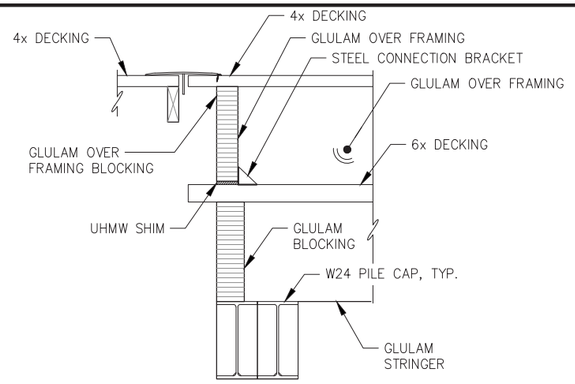

A S3.04 **OVER FRAMING SECTION AT SEAWALK**

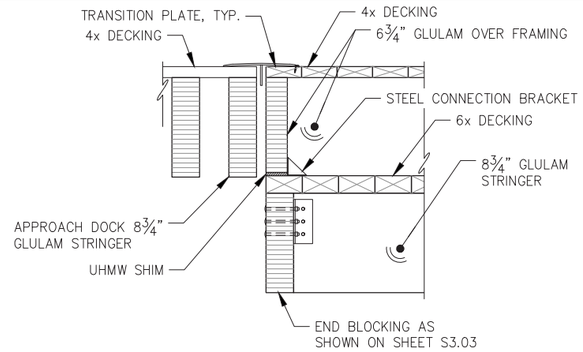

B S3.04 **OVERFRAMING SECTION AT APPROACH RAMP**

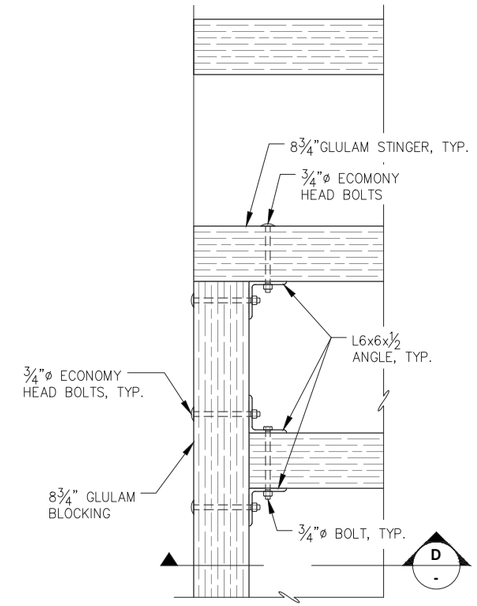

C S3.04 **EDGE BLOCKING CONNECTION SECTION**

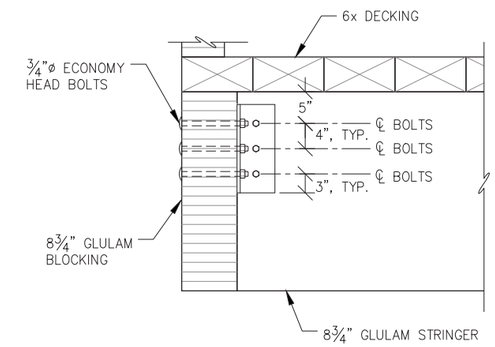

D - **EDGE BLOCKING CONNECTION PLAN**

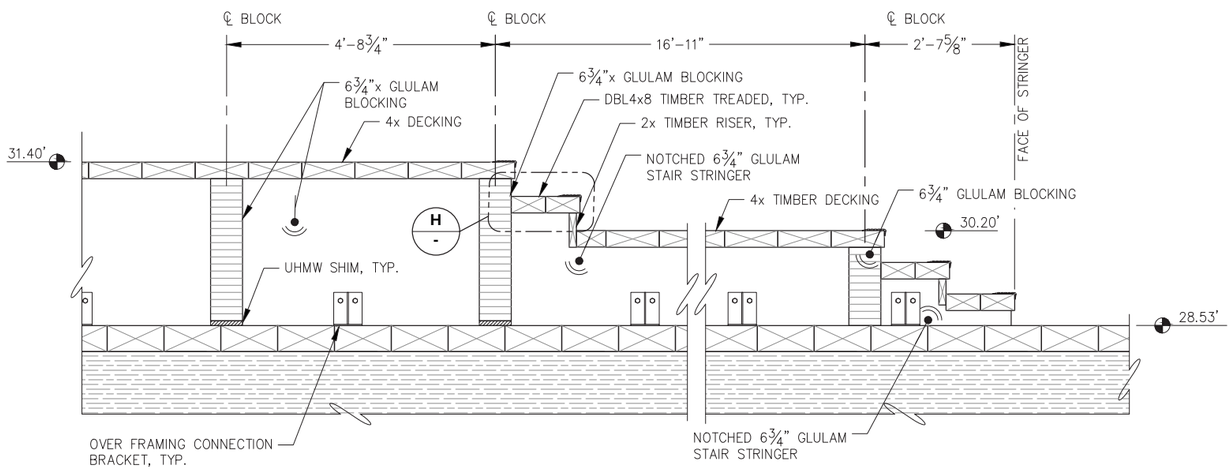

E S3.04 **OVERFRAMING STAIR SECTION**

NOTE:
1. NOTCH STRINGERS PRIOR TO PRESSURE TREATING TIMBER
2. PROVIDE UHMW SHIMS AS REQUIRED TO MATCH (E) DECK ELEVATIONS.

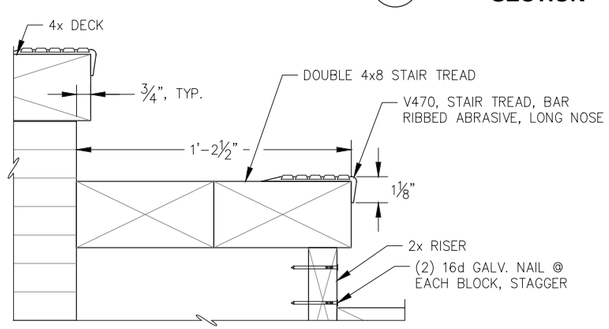

H - **STAIR NOSING DETAIL**

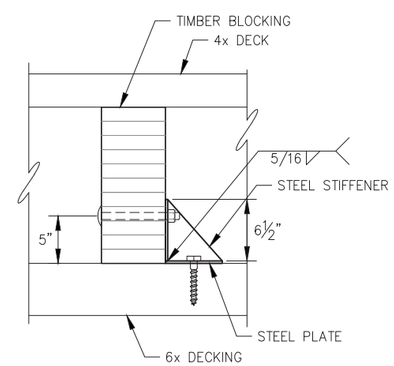

F - **TYPICAL OVER FRAMING CONNECTION SECTION**

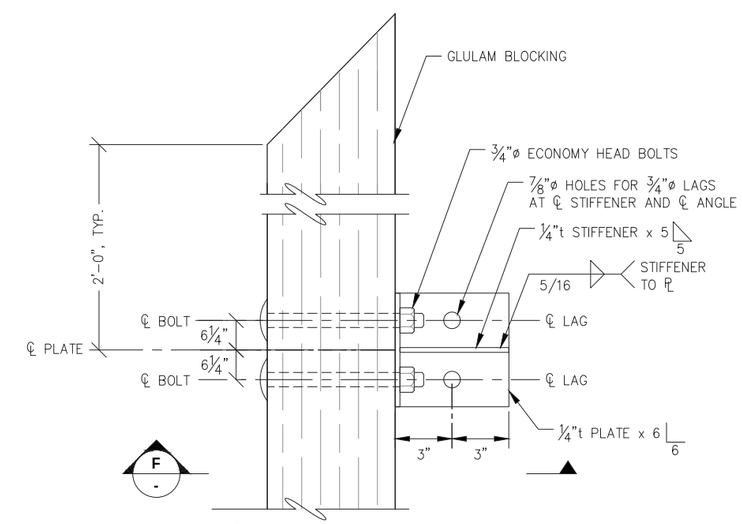

G S3.04 **TYPICAL OVER FRAMING CONNECTION PLAN**

REVISIONS

REV.	DATE	DESCRIPTION	DWN.	CKD.	APP.

P N D ENGINEERS, INC.
9360 Glacier Highway Ste 100
Juneau, Alaska 99801
Phone: 907-586-2093
Fax: 907-586-2099
www.pndengineers.com

DESIGN: MDS CHECKED: CRS
DRAWN: KLL APPROVED: CRS
SCALE: NTS

STATE OF ALASKA 49TH Charles R. Somerville CE-8845 REGISTERED PROFESSIONAL ENGINEER
DATE: 5/23/2019

DOWNTOWN WATERFRONT IMPROVEMENTS PHASE I
CBJ CONTRACT NO. DH19-014

SHEET TITLE:
TIMBER OVER FRAMING DETAILS

PND PROJECT NO.: 182045 C.A.N. NO.: AECC250

S3.09

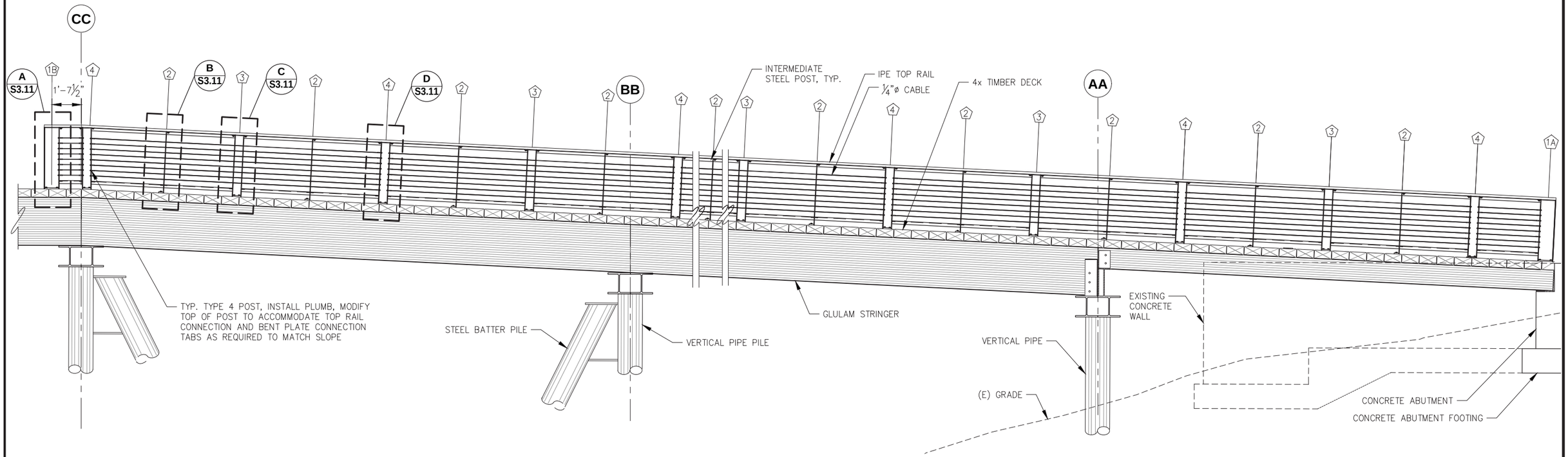

A S3.01 **ADA APPROACH RAMP PEDESTRIAN GUARDRAIL ELEVATION**

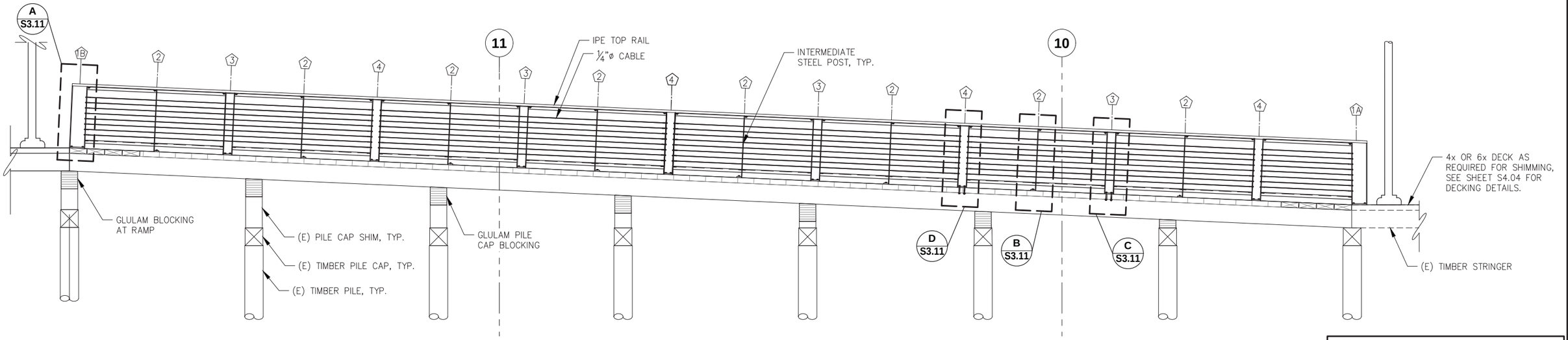

B S3.01 **SEAWALK RAMP PEDESTRIAN GUARDRAIL ELEVATION**

NOTE:

1. (#) INDICATES STEEL POST TYPE. SEE SHEET S3.11 FOR POST DETAILS

REVISIONS

REV.	DATE	DESCRIPTION	DWN.	CKD.	APP.

PND ENGINEERS, INC.
9360 Glacier Highway Ste 100
Juneau, Alaska 99801
Phone: 907-586-2093
Fax: 907-586-2099
www.pndengineers.com

DESIGN: MDS CHECKED: CRS
DRAWN: KLL APPROVED: CRS
SCALE: SCALE IN FEET 0 10 20 FT.

STATE OF ALASKA 49TH Charles R. Somerville CE-8845 REGISTERED PROFESSIONAL ENGINEER
DATE: 5/23/2019

DOWNTOWN WATERFRONT IMPROVEMENTS PHASE I
CBJ CONTRACT NO. DH19-014

SHEET TITLE: **PEDESTRIAN GUARDRAIL ELEVATION**

PND PROJECT NO.: 182045 C.A.N. NO.: AECC250

S3.10

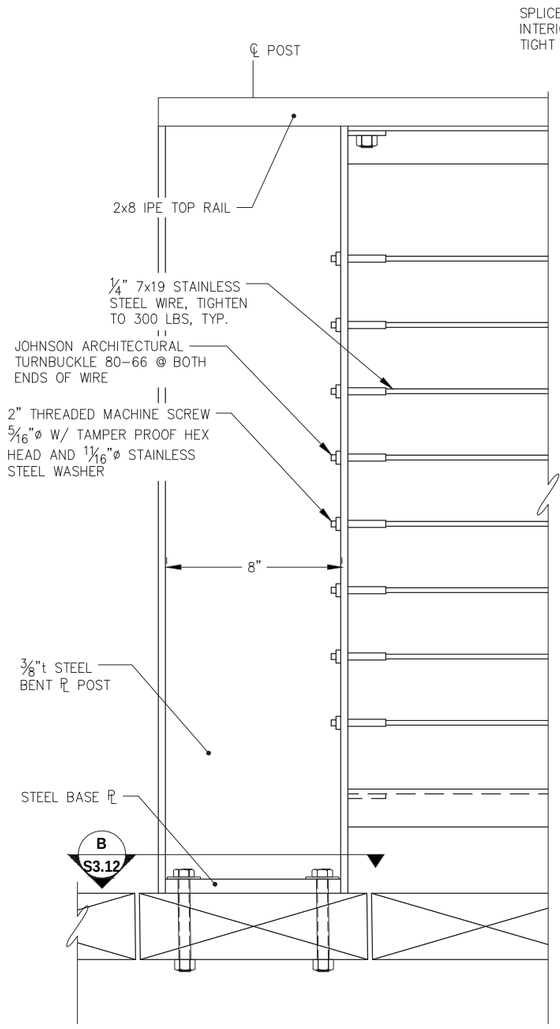

A - POST TYPE 1B 1A (OPP HAND) ELEVATION

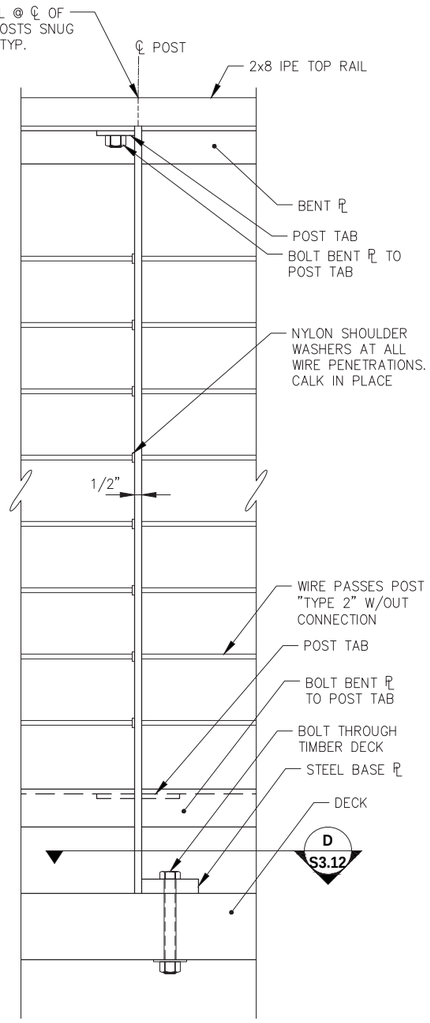

B - POST TYPE 2 ELEVATION

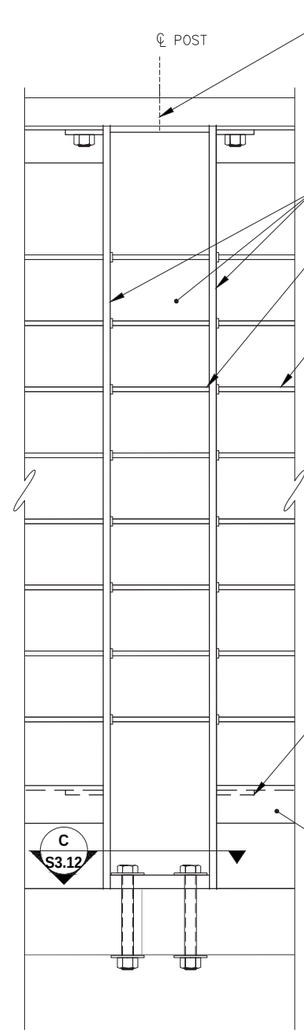

C - POST TYPE 3 ELEVATION

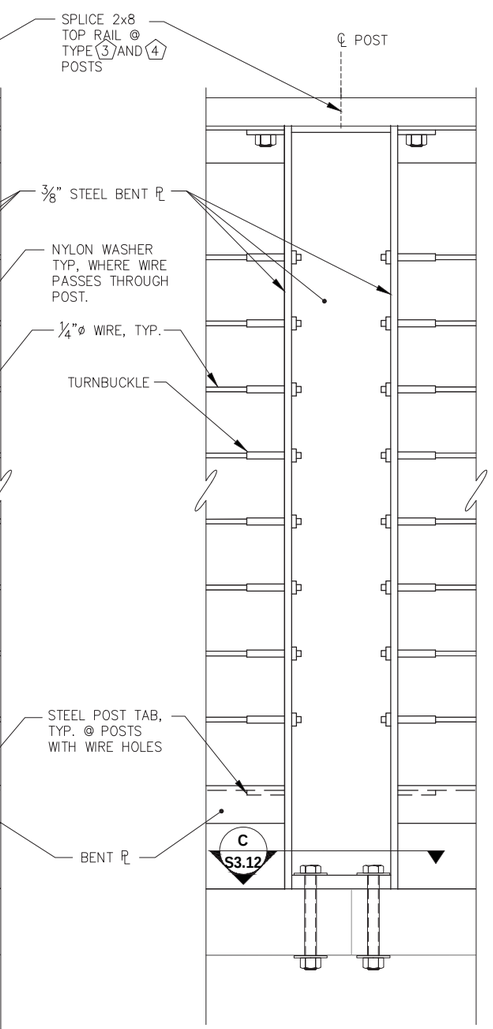

D - POST TYPE 4 ELEVATION

TYPE	TAB & HOLE LOCATIONS	NOTES
1A	RIGHT SIDE ONLY	CABLE PENETRATE RIGHT SIDE WITH TURNBUCKLES, SEE A/–
1B	LEFT SIDE ONLY	CABLE PENETRATE LEFT SIDE WITH TURNBUCKLES, SEE A/– SIM
2	BOTH SIDES	CABLE PENETRATE BOTH SIDE NO TURNBUCKLES, SEE DETAIL B/–
3	BOTH SIDES	CABLE PENETRATE BOTH SIDE NO TURNBUCKLES, SEE DETAIL C/–
4	BOTH SIDES	CABLE PENETRATE AND TURNBUCKLES BOTH SIDE, SEE DETAIL D/–

GUARD RAIL NOTES:

1. INSTALL POST PERPENDICULAR TO DECK, TOP RAIL, FOOTRAIL, AND CABLES TO FOLLOW DECK SLOPE.
2. HOT DIP GALVANIZE ENTIRE POST AND ALL METAL RAILING ASSEMBLIES AFTER FABRICATION. ALL WELDS TO BE GROUND SMOOTH AND ALL METAL EDGES DEBURRED AND LIGHTLY ROUNDED PRIOR TO GALVANIZING.
3. PROVIDE NYLON WASHERS AT ALL CABLE PENETRATIONS. CAULK SHOULDER WASHERS IN PLACE AT PENETRATIONS. PROVIDE NYLON SHOULDER WASHERS AND NYLON WASHERS UNDER TURNBUCKLE AND TERMINATION CONNECTIONS.
4. CUT TOP RAIL, BENT PLATES, AND WIRE TO FIT POST SPACING DETERMINED IN THE FIELD. FIELD TREAT ANY TIMBER FIELD CUT WITH AN APPROVED WOOD PRESERVATIVE TREATMENT. FIELD GALVANIZE ALL CUT OR FIELD WELDED MEMBERS WITH APPROVED GALVANIZING TECHNIQUE.
5. USE 3M 4200 FAST CURE MARINE SEALANT WHERE CAULKING IS CALLED FOR.
6. AT LOCATIONS WHERE EXISTING STRINGER BELOW DECKING PREVENTS THROUGH BOLTING, SUBSTITUTE 5/8"øx8" LAG BOLTS

CITY & BOROUGH OF JUNEAU DOCKS & HARBORS

REVISIONS

REV.	DATE	DESCRIPTION	DWN.	CKD.	APP.

PND ENGINEERS, INC.
9360 Glacier Highway Ste 100
Juneau, Alaska 99801
Phone: 907-586-2093
Fax: 907-586-2099
www.pndengineers.com

DESIGN: MDS CHECKED: CRS
DRAWN: KLL APPROVED: CRS
SCALE: SCALE IN FEET 0 10 20 FT.

STATE OF ALASKA 49TH Charles R. Somerville CE-8845 REGISTERED PROFESSIONAL ENGINEER
DATE: 5/23/2019

DOWNTOWN WATERFRONT IMPROVEMENTS PHASE I
CBJ CONTRACT NO. DH19-014

SHEET TITLE:
PEDESTRIAN GUARDRAIL DETAILS

PND PROJECT NO.: 182045 C.A.N. NO.: AECC250

S3.11

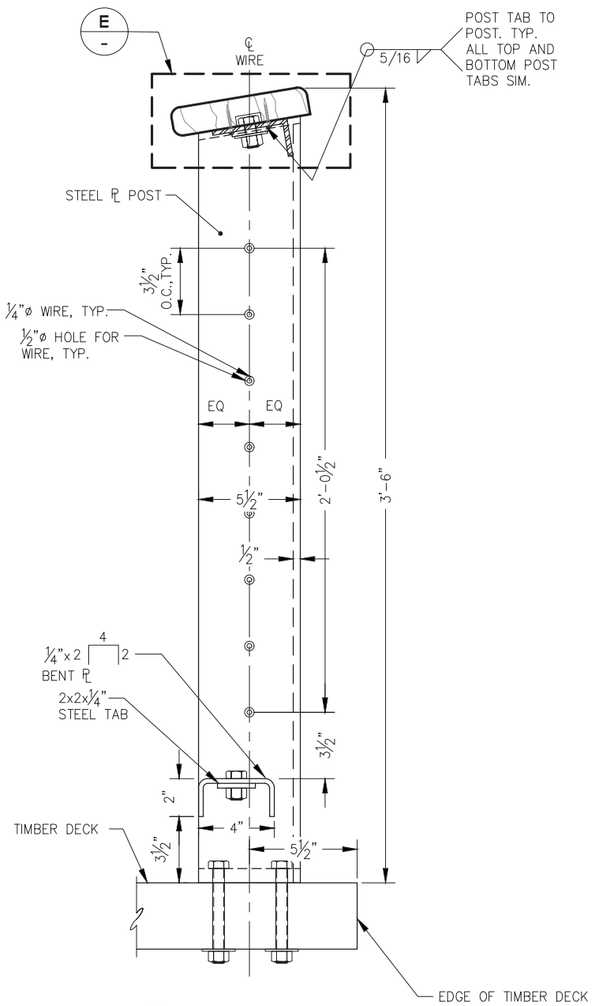

A - TYPICAL POST SECTION

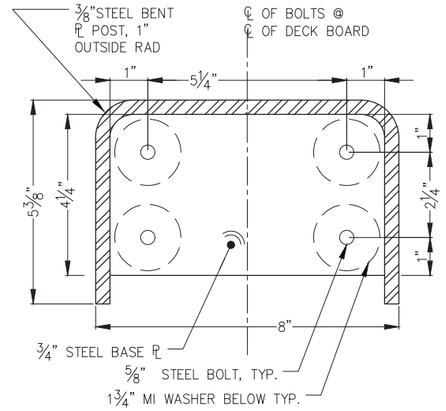

B S3.11 POST BASE PLATE TYPE 1A & 1B

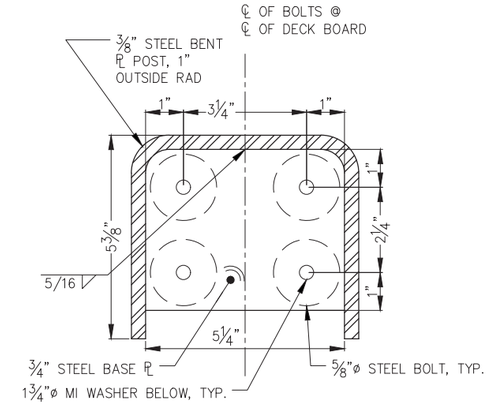

C S3.11 POST BASE PLATE TYPE 3, 4, 5A & 5B

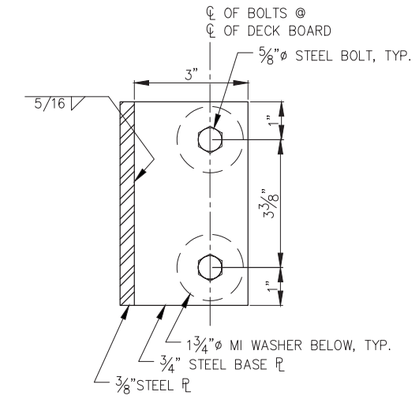

D S3.11 POST BASE PLATE TYPE 2

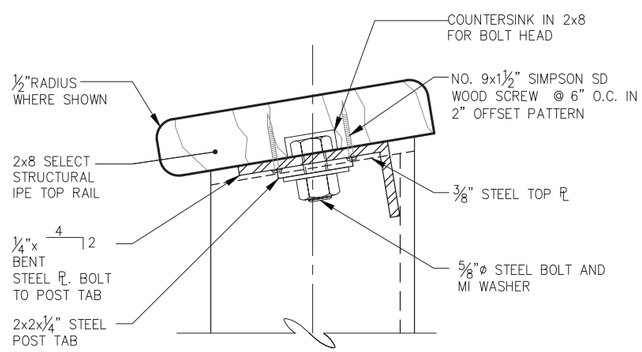

E - TOP RAIL DETAIL

REVISIONS

REV.	DATE	DESCRIPTION	DWN.	CKD.	APP.

PND ENGINEERS, INC.
9360 Glacier Highway Ste 100
Juneau, Alaska 99801
Phone: 907-586-2093
Fax: 907-586-2099
www.pndengineers.com

DESIGN: MDS CHECKED: CRS
DRAWN: KLL APPROVED: CRS
SCALE: SCALE IN FEET 0 10 20 FT.

STATE OF ALASKA 49TH Charles R. Somerville CE-8845 REGISTERED PROFESSIONAL ENGINEER
DATE: 5/23/2019

DOWNTOWN WATERFRONT IMPROVEMENTS PHASE I
CBJ CONTRACT NO. DH19-014

SHEET TITLE:
PEDESTRIAN GUARDRAIL SECTION AND DETAILS

PND PROJECT NO.: 182045 C.A.N. NO.: AECC250

S3.12

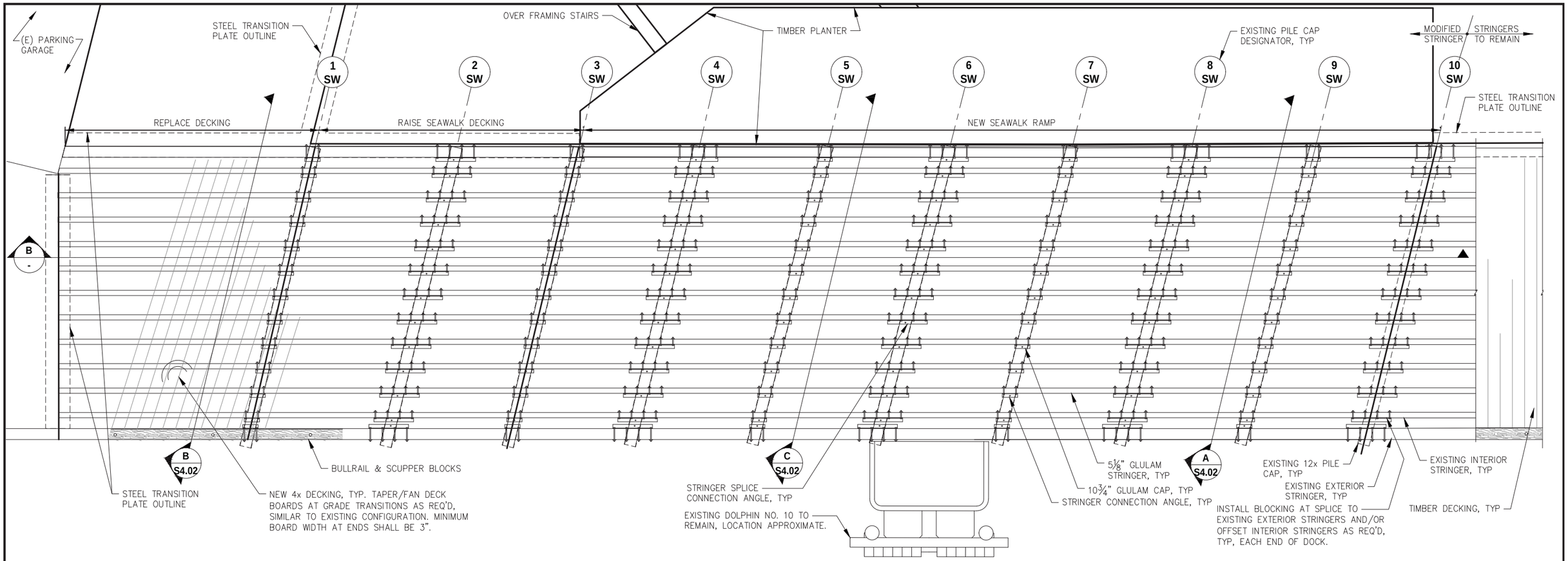

A S3.01 **DOCK MODIFICATIONS PLAN**

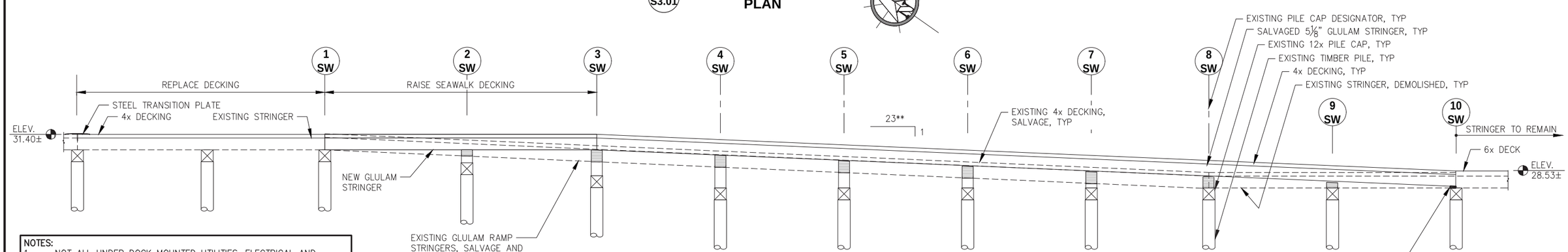

B - **DOCK MODIFICATIONS PROFILE**

**APPROXIMATE SLOPE
NOTE: NOT ALL REQUIRED COMPONENTS SHOWN THIS VIEW.

NOTES:
1. NOT ALL UNDER DOCK MOUNTED UTILITIES, ELECTRICAL AND APPURTENANCES SHOWN. FIELD CONFIRM ACTUAL SITE CONDITIONS.
2. DOCK ELEVATION APPROXIMATE VERIFY IN FIELD.
3. **APPROXIMATE SLOPE
4. NOT ALL REQUIRED COMPONENTS SHOWN THIS VIEW.

CITY & BOROUGH OF JUNEAU — DOCKS & HARBORS

REVISIONS

REV.	DATE	DESCRIPTION	DWN.	CKD.	APP.

PND ENGINEERS, INC.
9360 Glacier Highway Ste 100
Juneau, Alaska 99801
Phone: 907-586-2093
Fax: 907-586-2099
www.pndengineers.com

DESIGN: BMI CHECKED: CRS
DRAWN: BMI APPROVED: CRS
SCALE: NTS

STATE OF ALASKA 49TH Charles R. Somerville CE-8845 REGISTERED PROFESSIONAL ENGINEER
DATE: 5/23/2019

DOWNTOWN WATERFRONT IMPROVEMENTS PHASE I
CBJ CONTRACT NO. DH19-014

SHEET TITLE: **SEAWALK MODIFICATIONS PLAN / ELEVATION**

PND PROJECT NO.: 182045 C.A.N. NO.: AECC250

S4.01

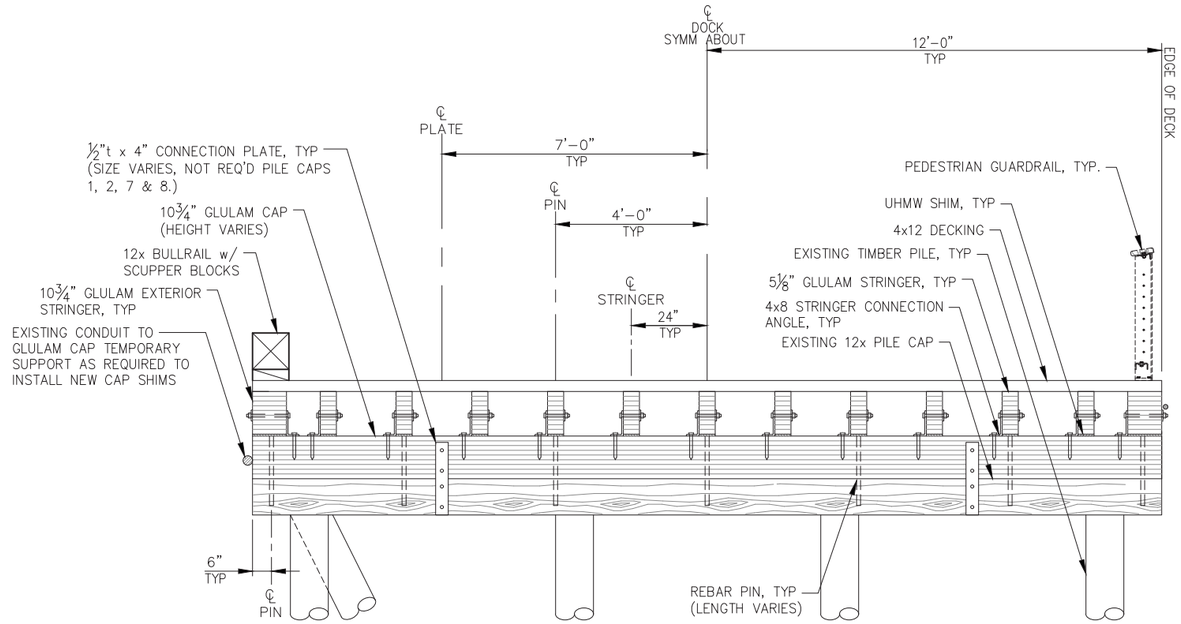

A / S4.01 TYPICAL RAMP SHIM SECTION AT LOCATIONS WITH OUT EXISTING SHIMS

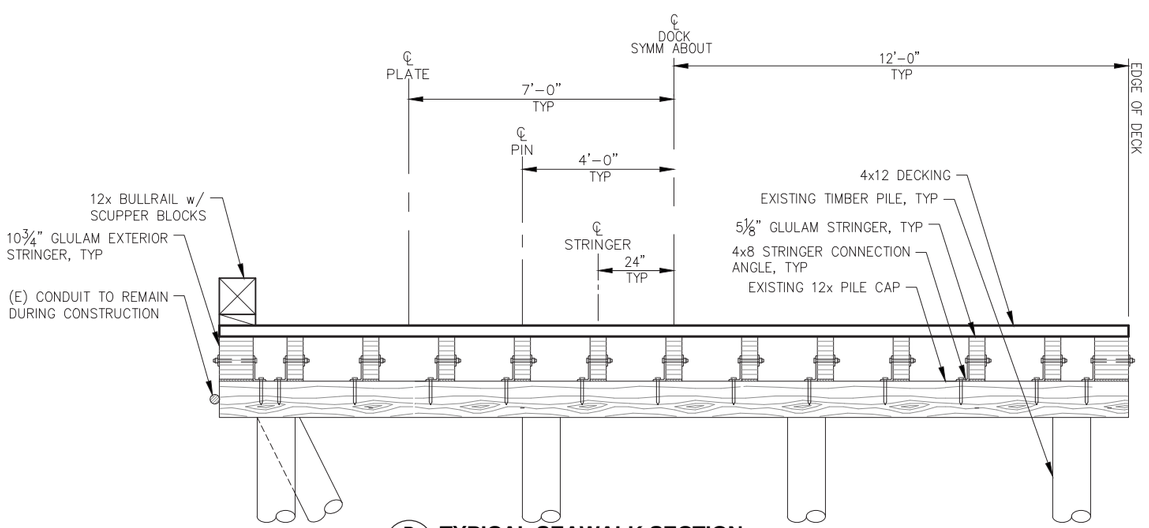

B / - TYPICAL SEAWALK SECTION WITH NEW DECK

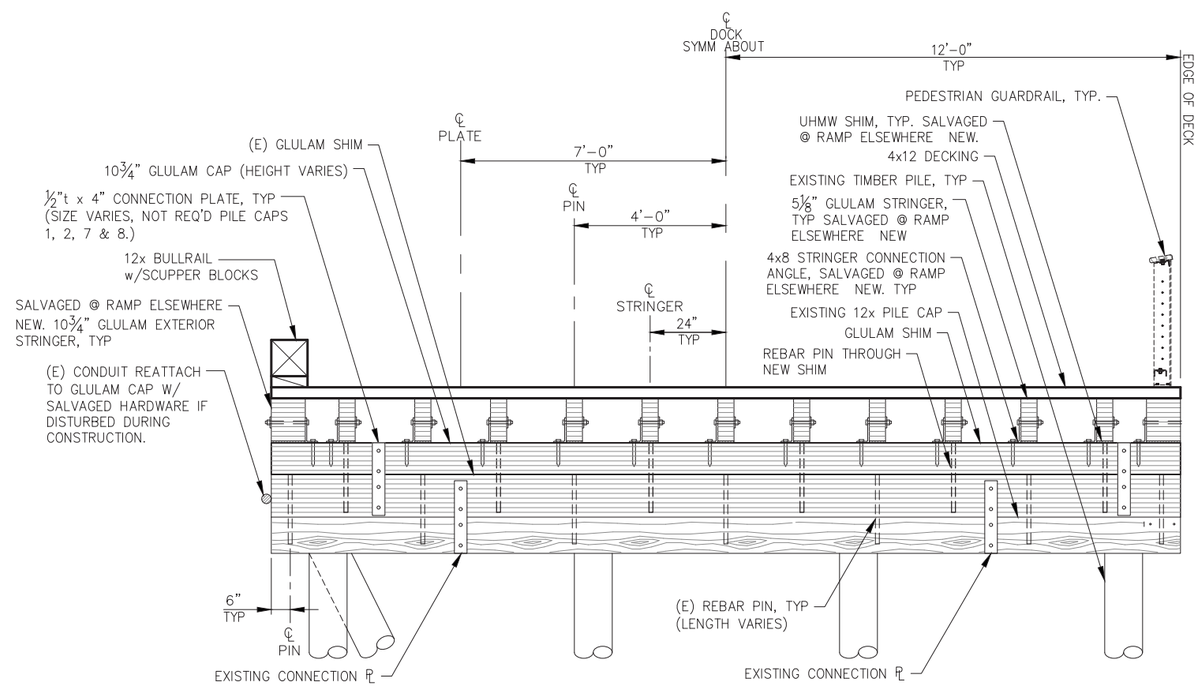

C / S4.01 TYPICAL RAMP SHIM SECTION AT LOCATIONS WITH EXISTING SHIMS

REVISIONS

REV.	DATE	DESCRIPTION	DWN.	CKD.	APP.

PND ENGINEERS, INC.
9360 Glacier Highway Ste 100
Juneau, Alaska 99801
Phone: 907-586-2093
Fax: 907-586-2099
www.pndengineers.com

DESIGN: BMI CHECKED: CRS
DRAWN: BMI APPROVED: CRS
SCALE: NTS

STATE OF ALASKA 49TH Charles R. Somerville CE-8845 REGISTERED PROFESSIONAL ENGINEER
DATE: 5/23/2019

DOWNTOWN WATERFRONT IMPROVEMENTS PHASE I
CBJ CONTRACT NO. DH19-014

SHEET TITLE: **SEAWALK MODIFICATIONS SECTIONS**

S4.02

PND PROJECT NO.: 182045 C.A.N. NO.: AECC250

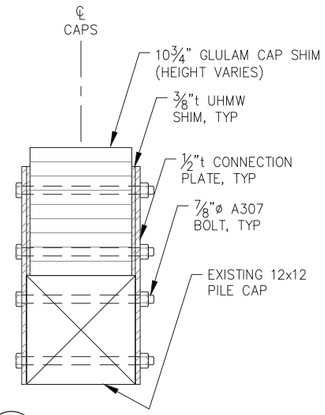

A - CONNECTION PLATE TYPICAL SECTION

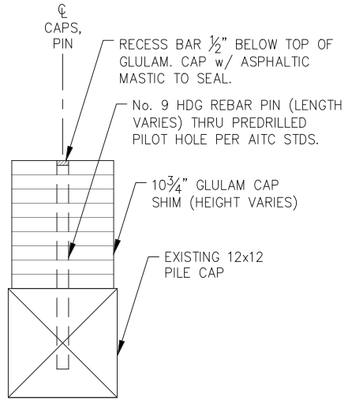

B - REBAR PIN TYPICAL SECTION AT UNSHIMED EXISTING PILE CAP

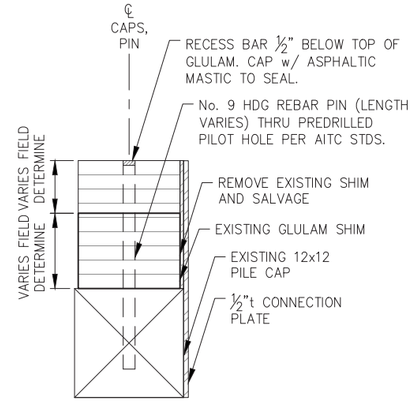

C - REBAR PIN TYPICAL SECTION AT SHIMED EXISTING PILE CAP

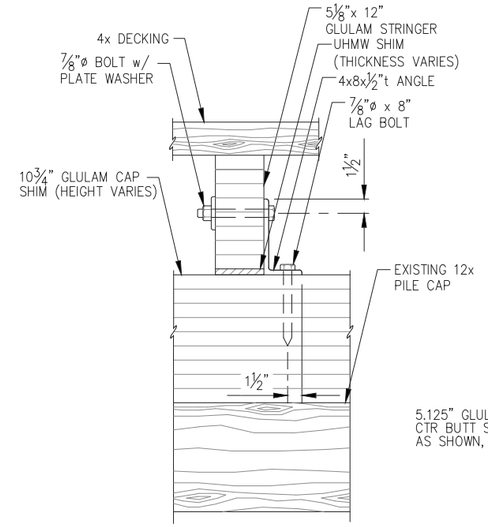

D - SECTION

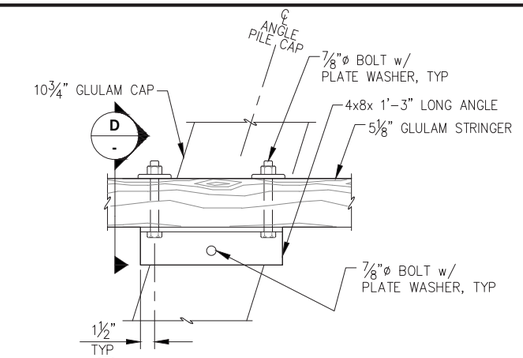

E - STRINGER CONNECTION - PLAN

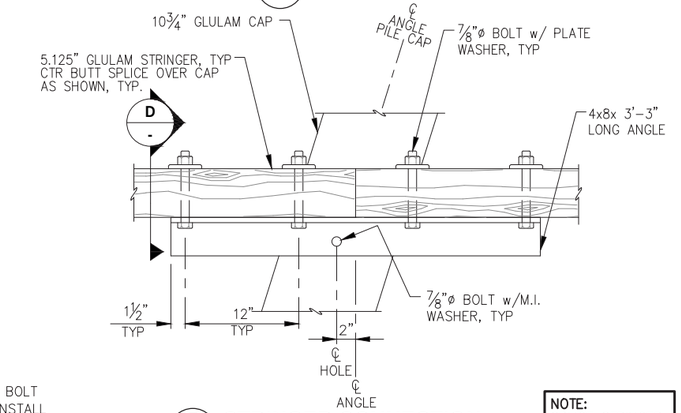

F - STRINGER CONNECTION PLAN AT SPLICE

NOTE:
SPLICE STRINGER AS REQUIRED.

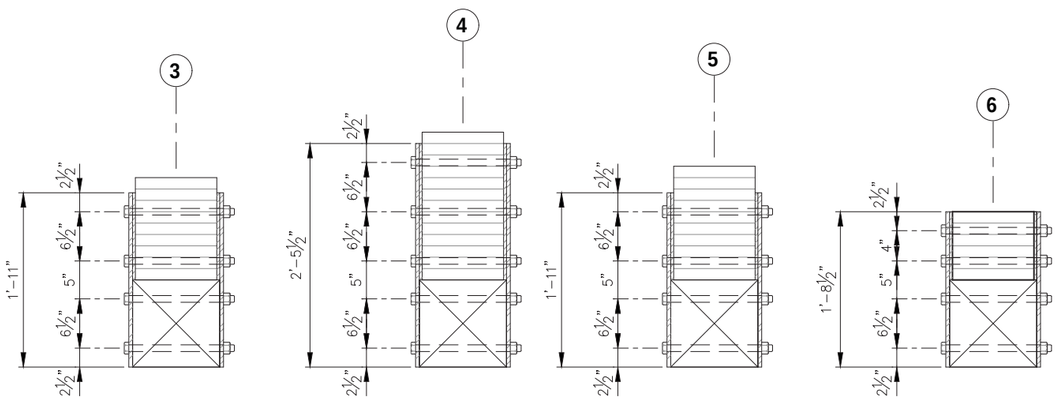

G - VARIOUS EXISTING PILE CAP CONNECTION PLATES TYPICAL SECTION

NOTE:
DETAILS NOT SHOWN SIMILAR TO TYPICAL SECTION A.

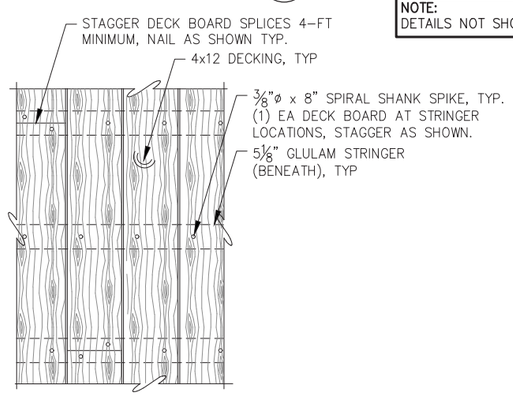

DECK NAILING - PLAN

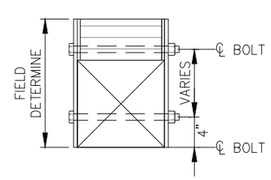

H - CAP CONNECTION PLATE SHIMS LESS THAN 9" DEEP

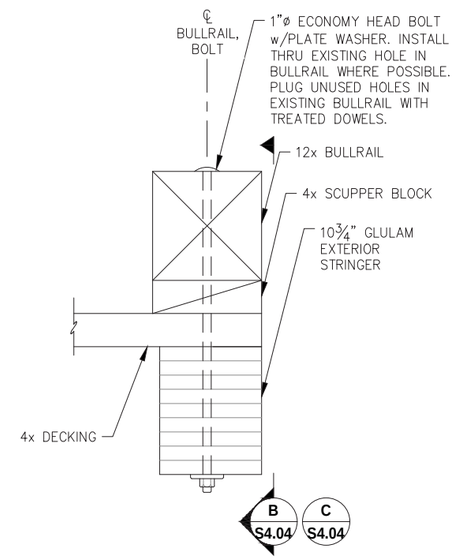

I - BULLRAIL - TYPICAL SECTION

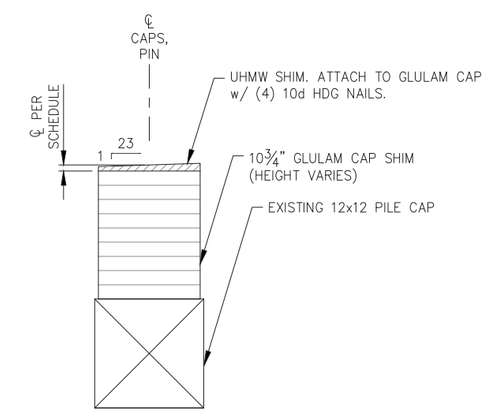

J - UHMW SHIM - TYPICAL SECTION

NOTE:
PROVIDE ADDITIONAL ASPHALT SHINGLES FOR SHIMMING AS REQ'D.

REVISIONS

REV.	DATE	DESCRIPTION	DWN.	CKD.	APP.

P N D ENGINEERS, INC.
9360 Glacier Highway Ste 100
Juneau, Alaska 99801
Phone: 907-586-2093
Fax: 907-586-2099
www.pndengineers.com

DESIGN: BMI CHECKED: CRS
DRAWN: BMI APPROVED: CRS
SCALE: NTS

STATE OF ALASKA 49TH Charles R. Somerville CE-8845 REGISTERED PROFESSIONAL ENGINEER
DATE: 5/23/2019

DOWNTOWN WATERFRONT IMPROVEMENTS PHASE I
CBJ CONTRACT NO. DH19-014

SHEET TITLE:
SEAWALK MODIFICATION DETAILS

PND PROJECT NO.: 182045 C.A.N. NO.: AECC250

S4.03

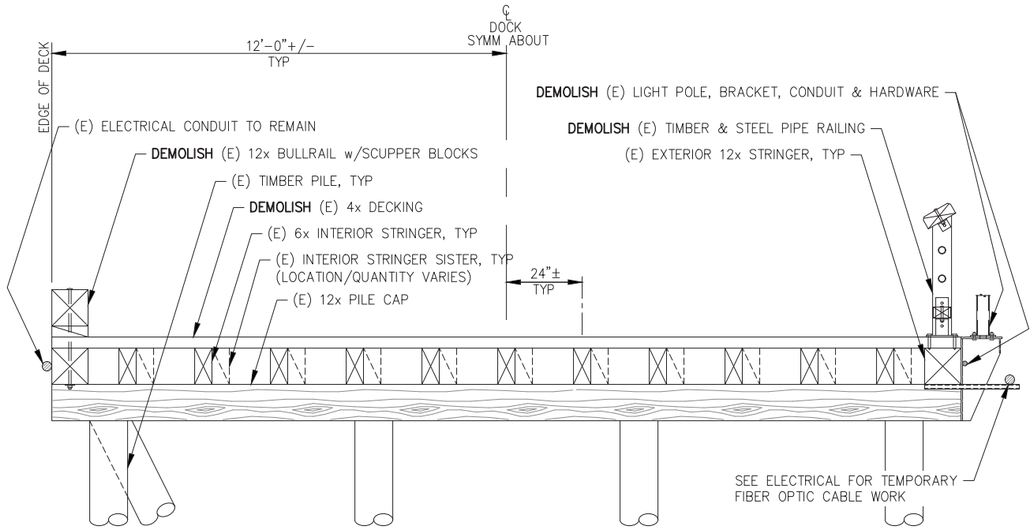

A / - **TYPICAL EXISTING DOCK SECTION**

NOTE: ALL EXISTING DOCK ITEMS TO REMAIN UNLESS OTHERWISE NOTED.

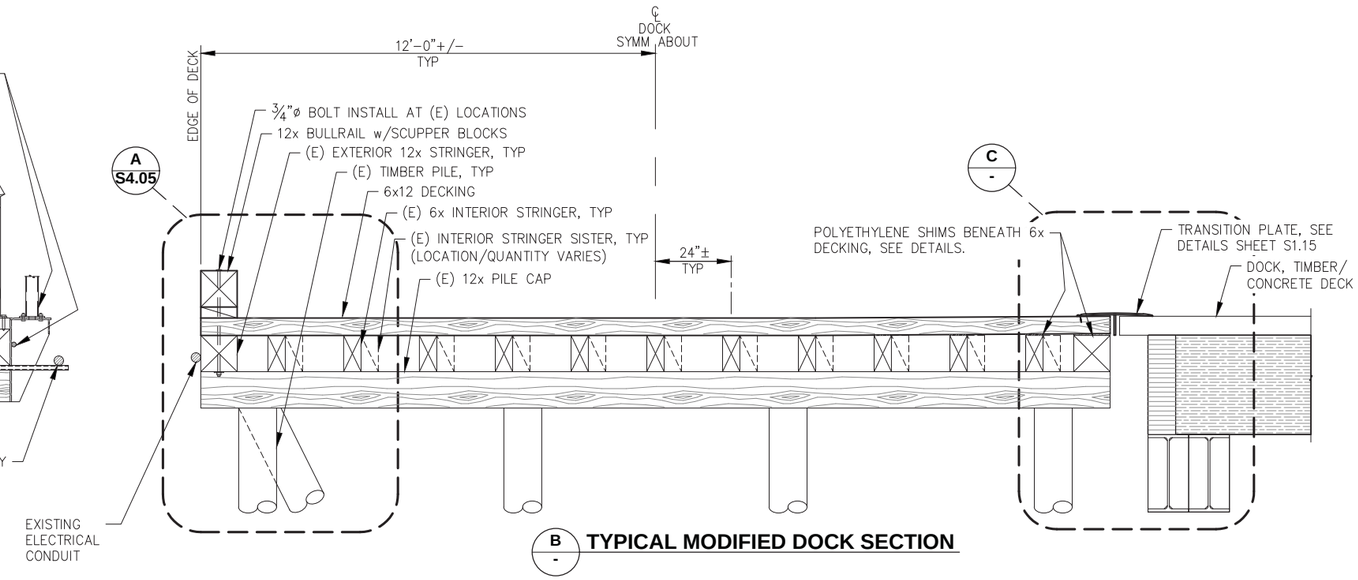

B / - **TYPICAL MODIFIED DOCK SECTION**

DOCK MODIFICATIONS SCOPE OF IMPROVEMENTS:

- REMOVE AND DISPOSE EXISTING DECKING, BULLRAIL, LIGHT POLES, BRACKETS & CONDUIT AND ASSOCIATED HARDWARE IN THEIR ENTIRETY.
- INSTALL NEW SHIMS, DECKING AND BULLRAIL AS SHOWN.
- CONTRACTOR SHALL VERIFY ALL FINAL ELEMENTS/MEASUREMENTS NOT SPECIFICALLY SHOWN AS REQUIRED TO PERFORM THE WORK.

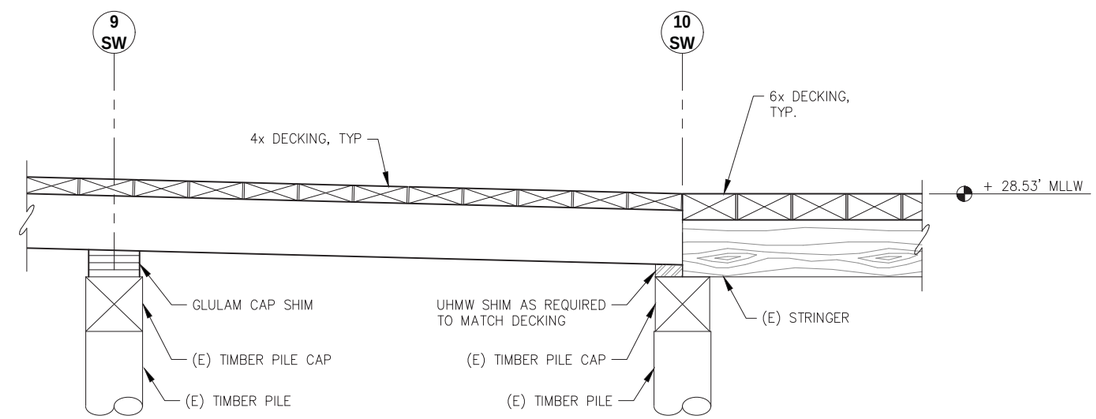

D / - **MODIFIED DOCK TRANSITION - PROFILE @ RAMP**

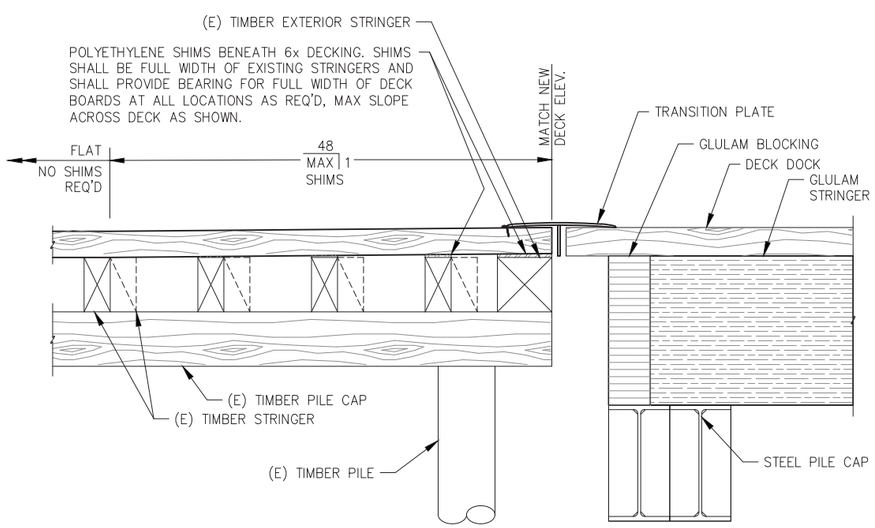

C / - **TYPICAL MODIFIED DOCK SECTION**
EAST SIDE SHIM DETAILS

NOTE:

1. ELEVATION DIFFERENCE BETWEEN TOP OF EXISTING DECK AND TOP OF THE NEW DOCK (28.53') VARIES FROM 0" TO 3". CONTRACTOR SHALL CONFIRM QUANTITY, THICKNESS AND SLOPE OF SHIMS REQUIRED TO MEET THE MAX SLOPE AND TRANSITION REQUIREMENTS BETWEEN VARIOUS DECK SURFACES ON ALL SIDES.
2. IN LEIU OF SHIMS SOME PLANING OF BOTTOM SIDE OF NEW 6x DECK BOARDS MAY BE REQUIRED TO MATCH TOP TO NEW/ADJACENT DOCKS.

DEMOLISH = REMOVE & DISPOSE AT CONTRACTOR PROVIDED DISPOSAL SITE.

SALVAGE = REMOVE, SAVE & SUITABLY STORE AT OWNER DESIGNATED LOCATION OR RELOCATE AS SHOWN ON PLANS. OWNER'S DESIGNATED STORAGE LOCATION SHALL BE WITHIN 5 MILES OF PROJECT SITE. CONTRACTOR SHALL BE RESPONSIBLE FOR ALL TRANSPORTING, LOADING, UNLOADING AND GENERAL HANDLING OF SALVAGED MATERIALS. STORAGE OF SALVAGED MATERIALS SHALL BE COORDINATED WITH THE OWNER AT ALL TIMES. SPECIFIC LOCATIONS FOR MATERIALS TO BE SALVAGED AND STORED SHALL BE DICTATED BY THE OWNER AND SHALL BE AT THE OWNER'S SOLE DISCRETION. THE CONTRACTOR SHALL BE RESPONSIBLE FOR ANY DAMAGE INCURRED DUE TO HIS ACTIVITIES. DAMAGED MATERIALS SHALL BE REPAIRED OR REPLACED AT NO COST TO THE OWNER.

CITY & BOROUGH OF JUNEAU
DOCKS & HARBORS

REVISIONS

REV.	DATE	DESCRIPTION	DWN.	CKD.	APP.

PND ENGINEERS, INC.
9360 Glacier Highway Ste 100
Juneau, Alaska 99801
Phone: 907-586-2093
Fax: 907-586-2099
www.pndengineers.com

DESIGN: BMI CHECKED: CRS
DRAWN: BMI APPROVED: CRS
SCALE: NTS

STATE OF ALASKA 49TH
Charles R. Somerville
CE-8845
REGISTERED PROFESSIONAL ENGINEER
DATE: 5/23/2019

DOWNTOWN WATERFRONT IMPROVEMENTS
PHASE I
CBJ CONTRACT NO. DH19-014

SHEET TITLE:
SEAWALK DECK MODIFICATION DETAILS

PND PROJECT NO.: 182045 C.A.N. NO.: AECC250

S4.04

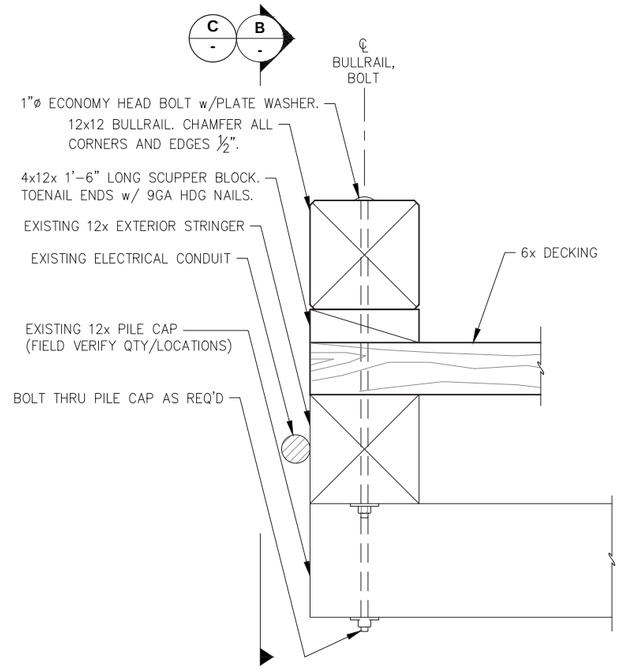

A - BULLRAIL - TYPICAL SECTION

NOTE:
- SCUPPER BLOCK AND CONNECTION BOLT SPACING 8'-0" O.C. MAX.
- PROVIDE BOLT LENGTH AS REQ'D IN LOCATIONS WHERE EXISTING PILE CAPS FALL BENEATH EXTERIOR STRINGER AND BOLT/SPLICE LOCATION.

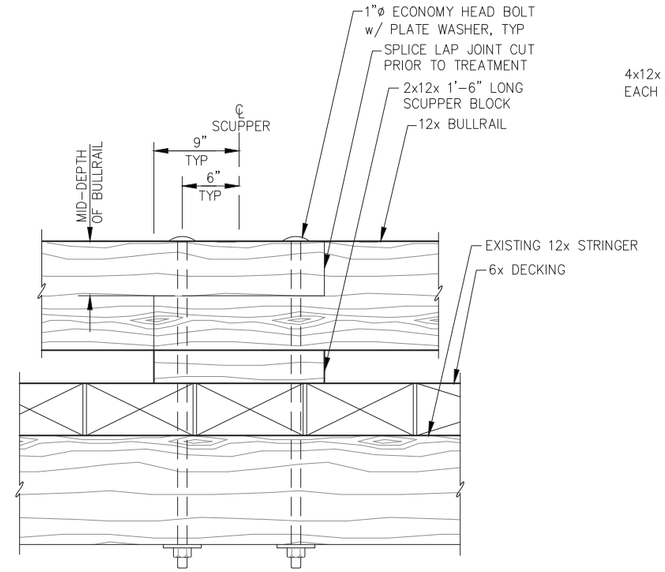

B - TYPICAL BULLRAIL SPLICE ELEVATION

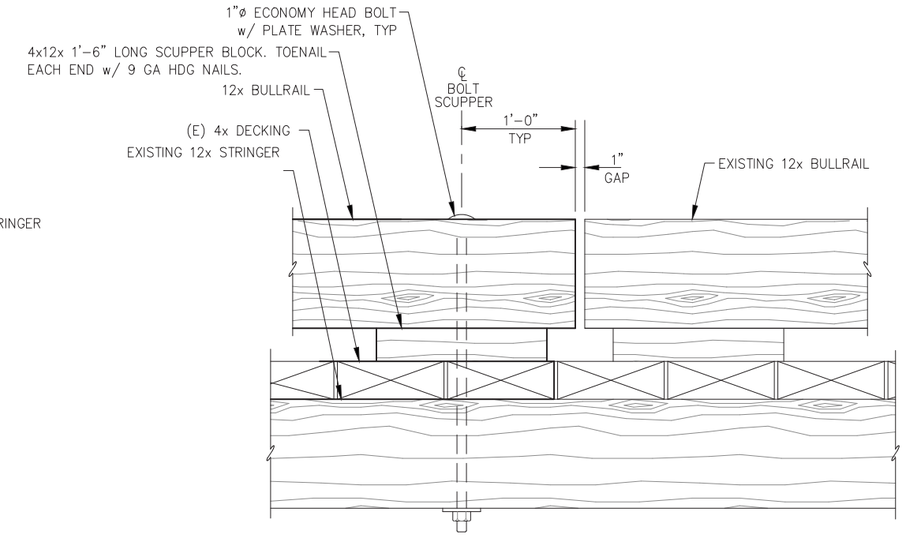

C - TYPICAL BULLRAIL END ELEVATION

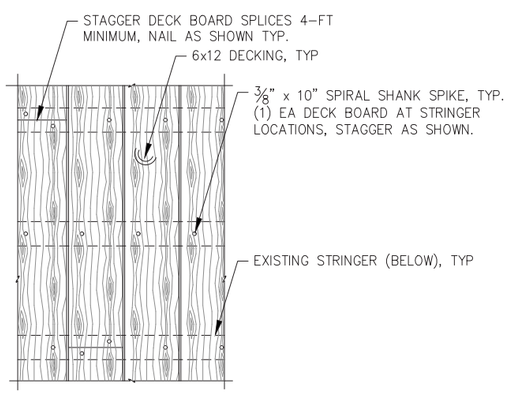

D - DECK NAILING PLAN

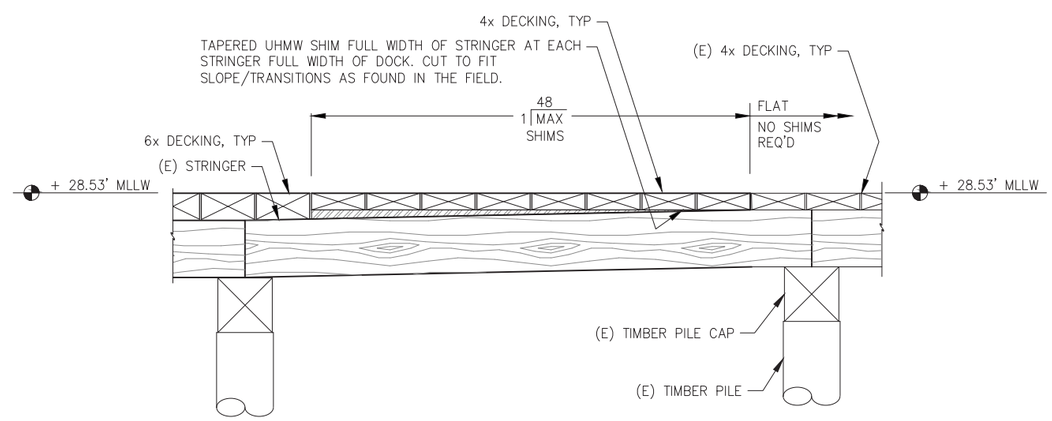

E - MODIFIED DOCK TRANSITION - PROFILE @ RAMP

NOTE: EXISTING DECK ELEVATIONS VARY, DETAIL SHOWS APPROXIMATE CONDITIONS. FIELD VERIFY EXISTING CONDITIONS.

REVISIONS

REV.	DATE	DESCRIPTION	DWN.	CKD.	APP.

P N D ENGINEERS, INC.
9360 Glacier Highway Ste 100
Juneau, Alaska 99801
Phone: 907-586-2093
Fax: 907-586-2099
www.pndengineers.com

DESIGN: BMI CHECKED: CRS
DRAWN: BMI APPROVED: CRS
SCALE: NTS

STATE OF ALASKA 49TH Charles R. Somerville CE-8845 REGISTERED PROFESSIONAL ENGINEER
DATE: 5/23/2019

DOWNTOWN WATERFRONT IMPROVEMENTS PHASE I
CBJ CONTRACT NO. DH19-014

SHEET TITLE: **SEAWALK DECK MODIFICATION DETAILS**

PND PROJECT NO.: 182045 C.A.N. NO.: AECC250

S4.05

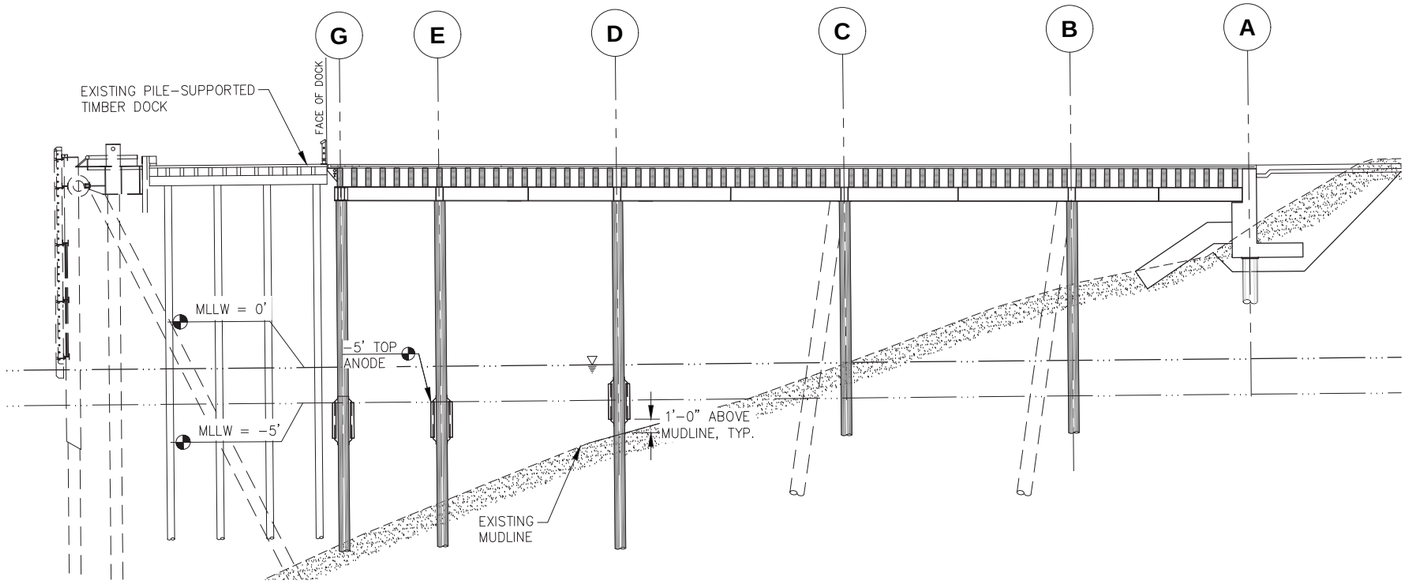

A / - PILE ANODE DOCK SECTION

NOTE: ANODE INSTALLATION ALONG GRID 5 SHOWN OTHER GRIDS SIMILAR

NOTE: ANODES SHALL BE INSTALLED ON ALL PILES WITH EXPOSED PILE BELOW A -5 MLLW ELEVATION. ANODES SHALL BE A MINIMUM OF 1'-0" FROM MUDLINE AND SHALL BE SPACED A MAXIMUM OF 20' WHEN PILE LENGTH ABOVE MUDLINE ALLOWS.

PILE ANODE SCHEDULE SUMMARY TABLE

LOCATION		DIAMETER (INCH)	WALL THICKNESS (INCH)	ANODE DIMENSION (INCH)	ANODE WEIGHT (LBS)	QUANTITY
1D	VERTICAL	18"	0.500	4x4x72	115	2
1E	VERTICAL	18"	0.500	4x4x72	115	2
1G	VERTICAL	18"	0.500	4x4x72	115	2
2D	VERTICAL	18"	0.500	4x4x72	115	2
2D.5	VERTICAL	18"	0.500	4x4x72	115	2
2G	VERTICAL	18"	0.500	4x4x72	115	2
3D	VERTICAL	18"	0.500	4x4x72	115	2
3D.5	VERTICAL	18"	0.500	4x4x72	115	2
3G	VERTICAL	18"	0.500	4x4x72	115	2
4D	VERTICAL	18"	0.500	4x4x72	115	2
4E	VERTICAL	18"	0.500	4x4x72	115	2
4G	VERTICAL	18"	0.500	4x4x72	115	2
5D	VERTICAL	18"	0.500	4x4x72	115	2
5E	VERTICAL	18"	0.500	4x4x72	115	2
5G	BATTER	18"	0.500	4x4x72	115	2
6D	VERTICAL	18"	0.500	4x4x72	115	2
6E	BATTER (S)	18"	0.500	4x4x72	115	2
6G	BATTER (N)	18"	0.500	4x4x72	115	2

PILE ANODE SCHEDULE SUMMARY TABLE

LOCATION		DIAMETER (INCH)	WALL THICKNESS (INCH)	ANODE DIMENSION (INCH)	ANODE WEIGHT (LBS)	QUANTITY
7D	VERTICAL	18"	0.500	4x4x72	115	2
7E	VERTICAL	18"	0.500	4x4x72	115	2
7G	VERTICAL	18"	0.500	4x4x72	115	2
8D	VERTICAL	16"	0.500	4x4x72	115	2
8E	VERTICAL	16"	0.500	4x4x72	115	2
8G	VERTICAL	16"	0.500	4x4x72	115	2
9FN	BATTER	16"	0.500	4x4x72	115	2
9FS	BATTER	16"	0.500	4x4x72	115	2
9G	VERTICAL	16"	0.500	4x4x72	115	2
10FN	BATTER	16"	0.500	4x4x72	115	2
10FS	BATTER	16"	0.500	4x4x72	115	2
10G	VERTICAL	16"	0.500	4x4x72	115	2
11FN	BATTER	16"	0.500	4x4x72	115	2
11FS	BATTER	16"	0.500	4x4x72	115	2
11G	VERTICAL	16"	0.500	4x4x72	115	2
12F	VERTICAL	16"	0.500	4x4x72	115	2
12G	VERTICAL	16"	0.500	4x4x72	115	2
13CC	VERTICAL	16"	0.500	4X4X72	115	2
13CC	BATTER	16"	0.500	4X4X72	115	2
14CC	VERTICAL	16"	0.500	4X4X72	115	2
13G	VERTICAL	16"	0.500	4X4X72	115	2
14G	VERTICAL	16"	0.500	4X4X72	115	2

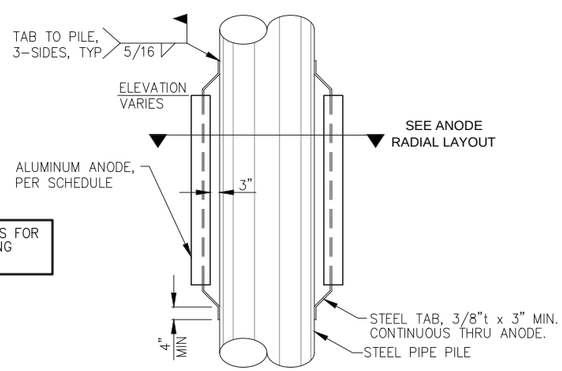

NOTE: SEE SPECIFICATIONS FOR FIELD WELD COATING REQUIREMENTS.

ANODE CONNECTION DETAIL

ANODE RADIAL LAYOUT

PIPE DIAMETER (INCH)	# ANODES / ELEV.	RADIAL LAYOUT (DEGREES)
16	2	180
18	2	180

SEE PLAN

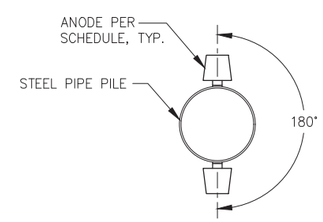

16" & 18" Ø PILE ANODE RADIAL LAYOUT PLAN

REVISIONS

REV.	DATE	DESCRIPTION	DWN.	CKD.	APP.

P N D ENGINEERS, INC.
9360 Glacier Highway Ste 100
Juneau, Alaska 99801
Phone: 907-586-2093
Fax: 907-586-2099
www.pndengineers.com

DESIGN: MDS CHECKED: CRS
DRAWN: KLL APPROVED: CRS
SCALE: AS SHOWN

STATE OF ALASKA 49TH Charles R. Somerville CE-8845 REGISTERED PROFESSIONAL ENGINEER
DATE: 5/23/2019

DOWNTOWN WATERFRONT IMPROVEMENTS PHASE I
CBJ CONTRACT NO. DH19-014

SHEET TITLE: **PILE ANODES**

PND PROJECT NO.: 182045 C.A.N. NO.: AECC250

S5.01

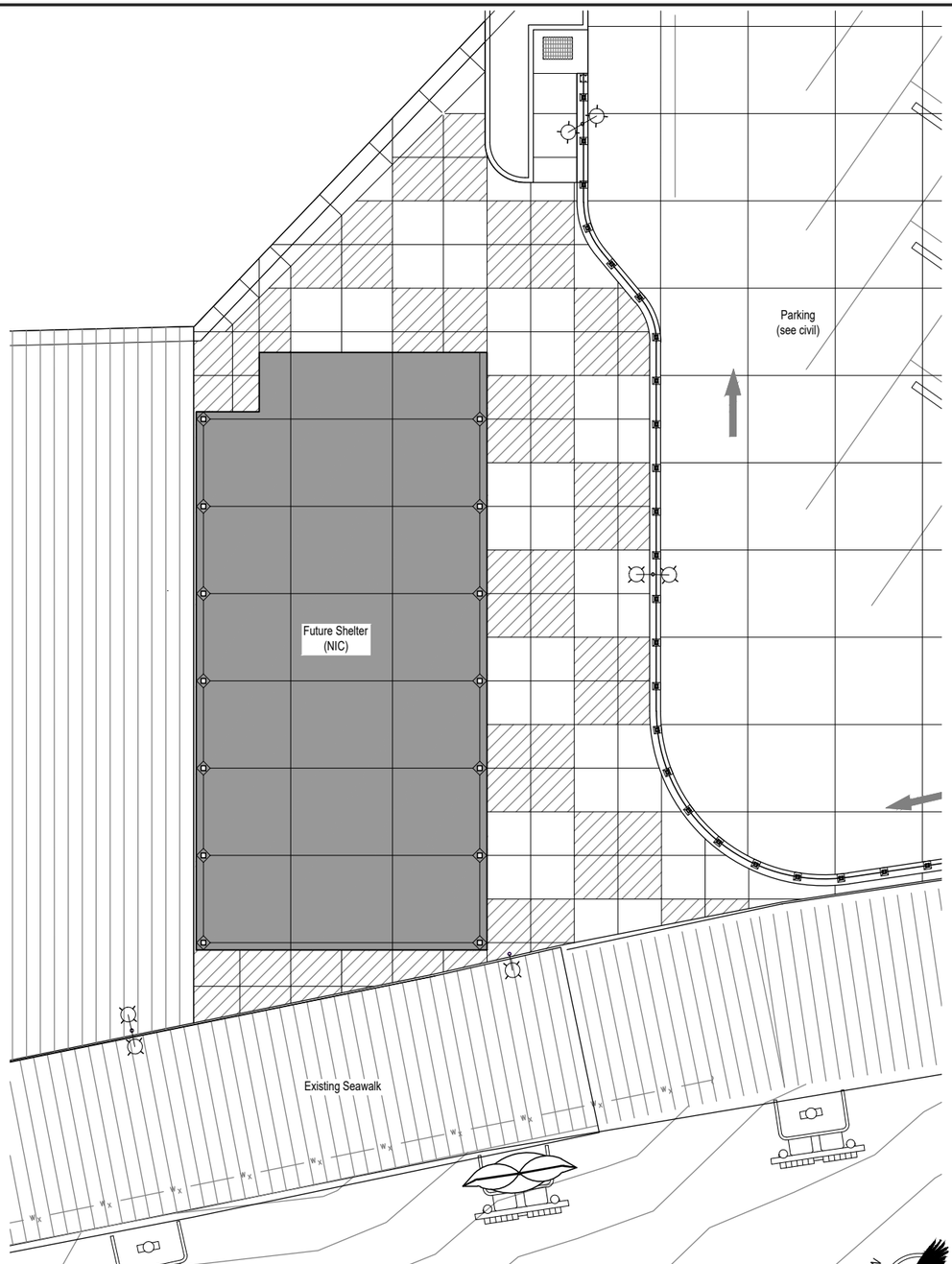

1 L1.01 **Layout Plan**
SCALE: 1" = 10'-0" @22x34

0' 10' 20' 30'

Paving Legend

- Concrete paving, see civil
- Sparkle concrete paving, see civil
- Colored concrete paving - silversmoke, see civil

Notes:
1. See civil for expansion and control joint layout of paved areas.

CITY & BOROUGH OF JUNEAU — DOCKS & HARBORS

Corvus Design
Landscape Architecture
www.corvus-design.com

REVISIONS

REV.	DATE	DESCRIPTION	DWN.	CKD.	APP.

PND ENGINEERS, INC.
9360 Glacier Highway Ste 100
Juneau, Alaska 99801
Phone: 907-586-2093
Fax: 907-586-2099
www.pndengineers.com

DESIGN: LP/CM CHECKED: CM
DRAWN: LP APPROVED: CM
SCALE:

STATE OF ALASKA 49TH Christopher R. Mertl 5/23/2019 No. 10440 REGISTERED PROFESSIONAL LANDSCAPE ARCHITECT
DATE: 5/23/2019

DOWNTOWN WATERFRONT IMPROVEMENTS
PHASE I
CBJ CONTRACT NO. DH19-014

SHEET TITLE: Concrete Paving Finish

PND PROJECT NO.: 182045 C.A.N. NO.: AECC250

L1.01
SHEET 1 OF 1

LEGEND

20/3	CIRCUIT BREAKER (AMPS/POLES)		LIGHT POLE
C/B	CIRCUIT BREAKER	NEC	NATIONAL ELECTRICAL CODE
CIVIL	CIVIL PROJECT DRAWINGS	N.I.C.	NOT IN CONTRACT
	CONTACTOR	NM	NON METALLIC
	DISCONNECT	PE	PHOTO ELECTRIC CELL
GRS	GALVANIZED RIGID STELL	REC	RECEPTACLE
GND	GROUND		RECEPTACLE, 120V, 20A INDUSTRIAL SPEC GRADE, WHITE WITH STAINLESS COVER PLATE
	GROUND BUSS	STRUCTURAL	STRUCTURAL PROJECT DRAWING SPECIFICATIONS
GFI	GROUND FAULT INTERRUPTER	UNISTRUT	SUPPORT CHANNEL UNISTRUT BRAND OR EQUAL
HT	HEAT TRACE	S	SWITCH, 120V, 20A INDUSTRIAL SPEC GRADE, WHITE WITH STAINLESS COVER PLATE
	HEAVY DUTY DISCONNECT (AMPS/POLES AS SHOWN)	(TYP)	TYPICAL
	HOME RUN	UHMW	ULTRA HIGH DENSITY MOLECULAR WEIGHT
LTG	LIGHTING	M	UTILITY METER
LC	LIGHTING CONTACTOR		

SHEET LIST TITLE

Sheet Number	Sheet Title
E1.01	OVERALL SITE PLAN – ELECTRICAL 1 OF 3
E1.02	OVERALL SITE PLAN – ELECTRICAL 2 OF 3
E1.03	OVERALL SITE PLAN – ELECTRICAL 3 OF 3
E1.04	PARTIAL CONCRETE DECK & TRENCH DETAIL – ELECTRICAL
E2.01	SINGLE LINE DIAGRAM
E2.02	EQUIPMENT & PANEL SCHEDULES
E2.03	ELECTRICAL RACK ELEVATIONS
E3.01	20' POLE DETAILS
E3.02	12' POLE DETAILS, LIGHT POLE TABLE & LUMINAIRE SCHEDULE
E3.03	LTG CONTROL SCHEMATIC & FUTURE POWER SINGLE LINE
E3.04	PARKING CANOPY PLAN – ELECTRICAL
E3.05	PARKING CANOPY SECTIONS AND DETAILS – ELECTRICAL
E4.01	FIBER CABLE RISER DIAGRAM
E4.02	EXISTING & NEW ACS RISER DIAGRAM
E4.03	CAMERA SCHEMATIC

NOTES:

1. REMOVE EXISTING LIGHT POLE AND REPLACE WITH TYPE A LUMINAIRE AND LIGHT POLE, SEE DETAILS 1 & 5, SHEET E3.01. BOLT LIGHT POLE BRACKET EXTENSION TO EXISTING ANCHOR BOLTS. BOLT NEW LIGHT POLE TO BRACKET EXTENSION. SEE STRUCTURAL FOR LIGHT POLE BRACKET EXTENSION. SPLICE EXISTING CONDUCTORS TO NEW CONDUCTORS (BRACKET EXTENSION HAS HANDHOLE TO ALLOW THIS WORK). POWER NEW LUMINAIRE FROM NEW CONDUCTORS (3 NO. 12). REUSE EXISTING CONDUCTORS FROM PANEL IN PARKING GARAGE TO POLE BASE (CKT 4 OR 12). SEE LIGHT POLE TABLE, SHEET E3.02. SEE LUMINAIRE SCHEDULE. PROVIDE POLES WITH BANNER ARMS.
2. REMOVE EXISTING WALL MOUNT LUMINAIRE. REPLACE WITH NEW TYPE D WALL MOUNT LUMINAIRE. USE CONCRETE ANCHORS (HILTE) TO SECURE TO PARKING GARAGE. FEED WITH SAME CIRCUIT AS EXISTING.

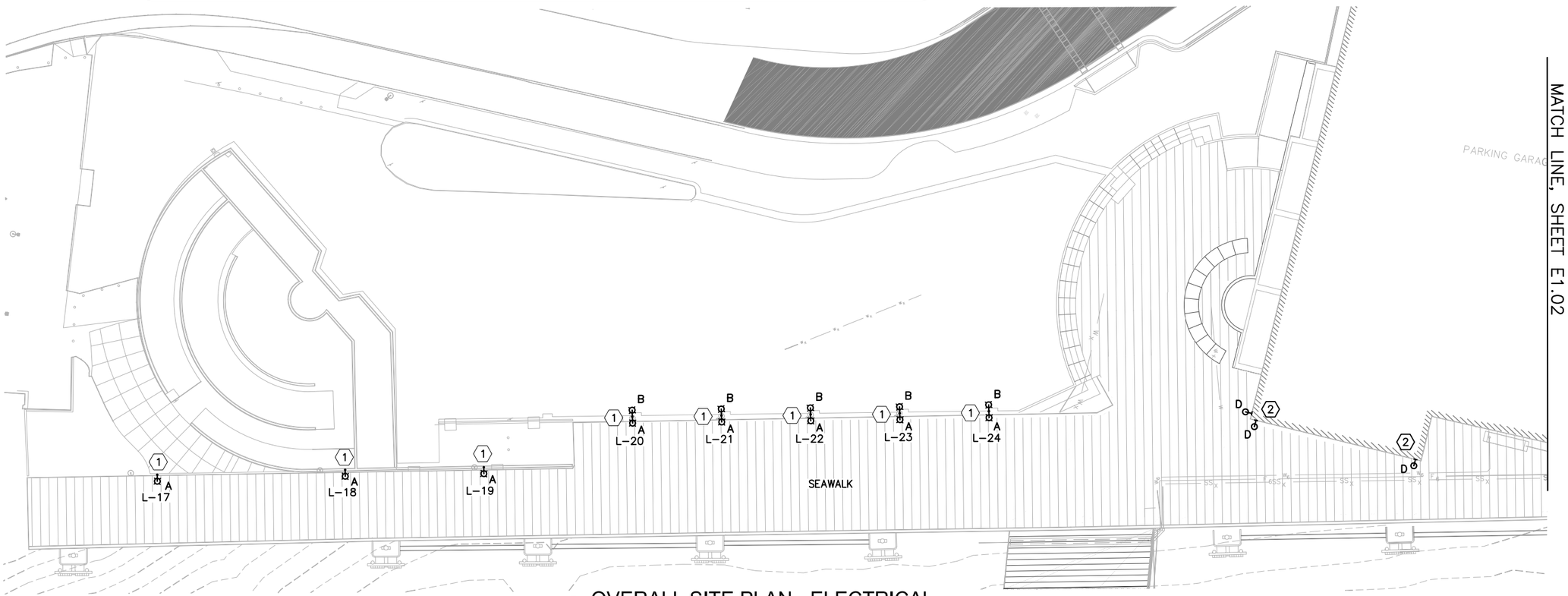

1 OVERALL SITE PLAN - ELECTRICAL

CITY & BOROUGH OF JUNEAU — DOCKS & HARBORS

MORRIS ENGINEERING GROUP INC
2375 Jordan Avenue #7, Juneau, AK 99801
Phone: 907-789-3350, License: AECL1010

REVISIONS

REV.	DATE	DESCRIPTION	DWN.	CKD.	APP.

PND ENGINEERS, INC.
9360 Glacier Highway Ste 100
Juneau, Alaska 99801
Phone: 907-586-2093
Fax: 907-586-2099
www.pndengineers.com

DESIGN: MGM CHECKED: MGM
DRAWN: JRW APPROVED: MGM
SCALE: SCALE IN FEET 0 20 40 FT.

STATE OF ALASKA 49TH — Mark G. Morris, May 23, 2019, No. EE 8613, REGISTERED PROFESSIONAL ENGINEER
DATE: 5/23/2019

DOWNTOWN WATERFRONT IMPROVEMENTS PHASE I
CBJ CONTRACT NO. DH19-014

SHEET TITLE: **OVERALL SITE PLAN - ELECTRICAL 1 OF 3**

PND PROJECT NO.: 182045 C.A.N. NO.: ~~AECG250~~.DWG

E1.01

SHEET NOTES:

1. ALL ENCLOSURES AND JUNCTION BOXES SHALL BE 316 STAINLESS STEEL, NEMA 4X.
2. LIGHT POLES ARE NUMBERED L–1 TO L–29. SEE LIGHT POLE TABLE, SHEET E3.02 FOR FOUNDATION TO BE USED. TYPE OF LUMINAIRE NEXT TO LIGHT POLE (A, B, C, OR D), SEE LUMINAIRE SCHEDULE.
3. INSTALL ALL EQUIPMENT PER CIVIL.
4. SEE EQUIPMENT SCHEDULE, SHEET E2.02 FOR (#) EQUIPMENT NUMBERS.
5. SUPPORT CONDUIT AND ENCLOSURE UNDER DOCK ON SUPPORT CHANNEL. SIZE AND QUANTITY AS REQUIRED. ROUTE CONDUIT BETWEEN BEAMS, UNDER BEAMS, ETC. AS REQUIRED. MANY BENDS MAY BE REQUIRED. MOUNT ENCLOSURES UNDER BEAMS OR ON SIDE OF BEAMS AS NEEDED. ROUTE CONDUIT AROUND STRUCTURE, WATER, & SEWER LINES, ETC.

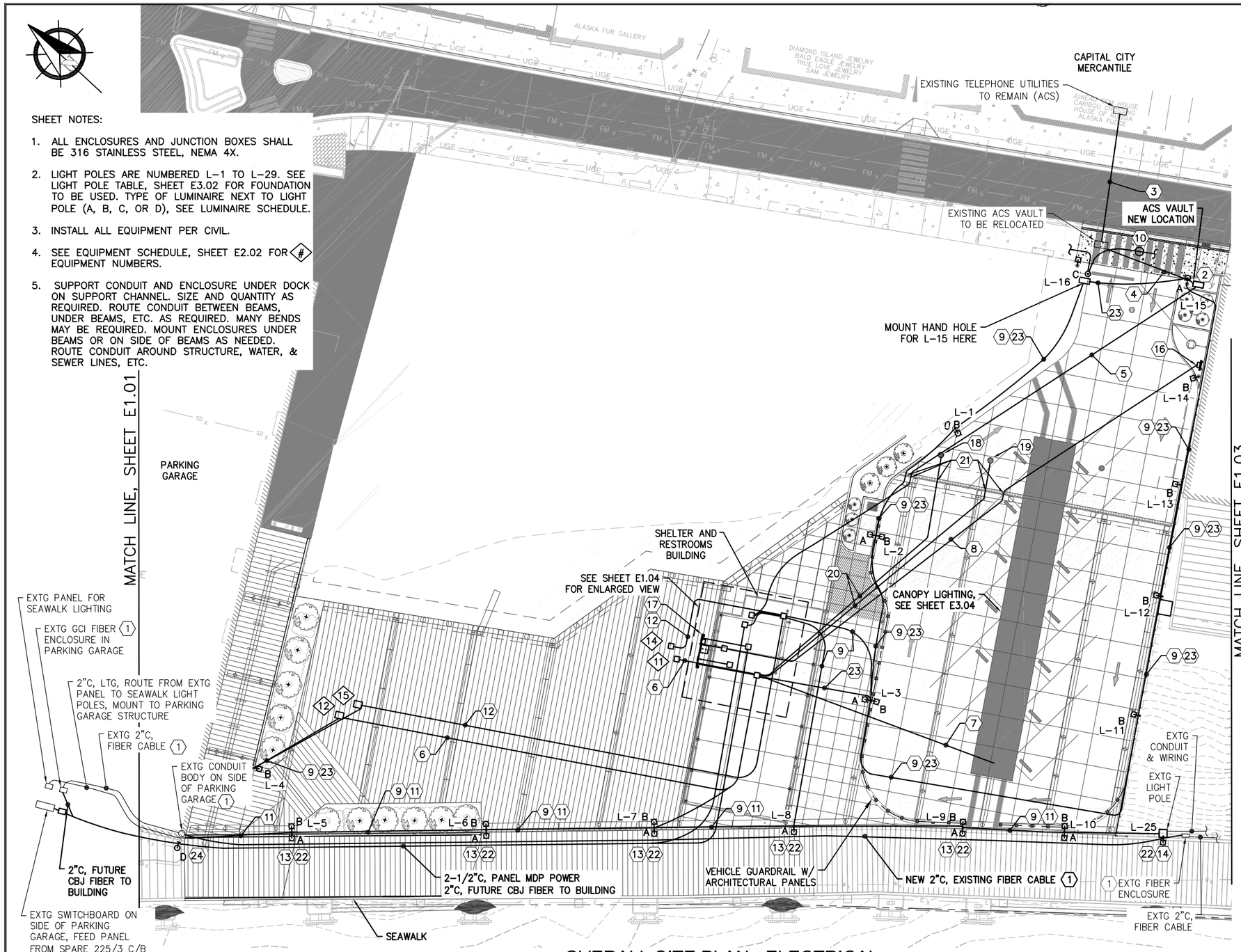

1 OVERALL SITE PLAN - ELECTRICAL

KEY NOTES:

1. REMOVE FIBER CABLE FROM TERMINATION POINT IN PARKING GARAGE AND PULL OUT OF CONDUIT BACK TO EXISTING ENCLOSURE JUST SOUTH OF PROJECT BOUNDARY. REMOVE CONDUIT ON SEAWALK BETWEEN PARKING GARAGE AND ENCLOSURE. REPLACE WITH NEW CONDUIT ROUTED UNDER SEAWALK. RE–PULL FIBER CABLE AND RE–TERMINATE.
2. RELOCATE ACS VAULT AND EXTEND EXISTING 4"C & 2"C FROM EXISTING VAULT LOCATION TO NEW LOCATION. PROVIDE 2"C FROM RELOCATED VAULT TO ENCLOSURE UNDER DECK AT FUTURE BUILDING LOCATION.
3. EXISTING 4"C & 2"C EXTEND TO RELOCATED ACS VAULT. USE RMC.
4. 4"C & 2"C, CONNECT TO EXISTING CONDUIT AND ROUTE TO RELOCATED VAULT.
5. 2"C, ROUTE TO ACS ENCLOSURE FOR FUTURE BUILDING.
6. 2"C, 2 NO. 8 & 1 NO. 10 GND (LTG), 4 NO. 8 & 1 NO. 10 GND (REC). MOUNT TO UNDERSIDE OF DECK ON SUPPORT CHANNEL.
7. 2"C, 2 NO. 8 & 1 NO. 10 GND. STUB UP INTO CANOPY COLUMN. SEE DETAILS SHEET E3.05.
8. (1) 2"C, LIFT STATION POWER.
   (1) 2"C, SPARE.
9. 2"C, FUTURE CAMERA ROUTE TO 12" X 12" X 6" JUNCTION BOX AT EACH LIGHT POLE. SEE DETAIL 3, SHEET E3.01. WHERE POLE IS MOUNTED ON CONCRETE BASE, ROUTE TO J–BOX NEXT TO POLE, SEE DETAIL 4, SHEET E3.01.
10. EXISTING CBJ STREET LIGHT TO BE REMOVED AND REPLACED BY LIGHT POLE WITH TYPE C LUMINAIRE. ROUTE EXISTING CONDUIT TO NEW POLE. PULL NEW CONDUCTORS BETWEEN EXISTING POLES ON EACH SIDE.
11. 2"C, 6 NO. 8 & 1 NO. 8 GND, ROUTE TO 12" X 12" X 6" JUNCTION BOX AT EACH LIGHT POLE, SEE DETAIL 3 SHEET E3.01.
12. 2"C, FUTURE CAMERA TO 24" X 24" X 12" ENCLOSURE.
13. REMOVE EXISTING LIGHT POLE, MOUNTING BRACKET, AND CONDUIT BACK TO PARKING GARAGE. PROVIDE NEW LIGHT POLE AND LUMINAIRES AS SHOWN. PROVIDE NEW CONDUIT AND WIRING. RE–POWER ON SAME CIRCUITS (CKTS 6, 8, & 10).
14. REMOVE EXISTING LIGHT POLE REPLACE WITH TYPE A LUMINAIRE AND LIGHT POLE SEE DETAIL 1 & 5, SHEET E3.01. BOLT LIGHT POLE BRACKET EXTENSION TO EXISTING ANCHOR BOLTS. BOLT NEW LIGHT POLE TO LIGHT POLE BRACKET EXTENSION. SPLICE EXISTING CONDUCTORS TO NEW CONDUCTORS (BRACKET EXTENSION HAS HANDHOLE TO ALLOW THIS WORK). POWER NEW LUMINAIRE FROM NEW CONDUCTORS (3 NO. 12). REUSE EXISTING CONDUCTORS FROM PANEL IN PARKING GARAGE TO POLE BASE (CKTS 6, 8, & 10).
15. (2) 2"C, SPARE
16. DISCONNECT AND LIFT STATION CONTROL PANEL MOUNT TO RACK ADJACENT LIFT STATION, SEE DETAIL 2, SHEET E2.03.
17. PANEL MDP, TRANSFORMER, PANEL B, & LIGHTING CONTACTOR ON RACK, SEE SHEET E2.03.
18. WATER MANHOLE. SEE CIVIL.
19. SEWER MANHOLE. SEE CIVIL.
20. 2"C, SPARE.
21. ROUTE CONDUIT AT 90° ANGLE TO WALL. SLEEVE ALL CONDUIT PENETRATIONS IN WALL. COORDINATE WITH FABRICATOR OF CONCRETE ABUTMENT. SEE CIVIL.
22. PROVIDE POLE WITH BANNER ARMS. SEE DETAIL 1, SHEET E3.01.
23. 2"C, 4 NO. 8 & 1 NO. 10 GND LIGHTING (2 NO. 8), SPARE (2 NO. 8).
24. REMOVE EXISTING WALL MOUNT LUMINAIRE. REPLACE WITH NEW TYPE D WALL MOUNT LUMINAIRE. USE CONCRETE ANCHORS (HILTE) TO SECURE TO PARKING GARAGE. FEED WITH SAME CIRCUIT AS EXISTING.

CITY & BOROUGH OF JUNEAU — DOCKS & HARBORS

MORRIS ENGINEERING GROUP INC
2375 Jordan Avenue #7, Juneau, AK 99801
Phone: 907-789-3350, License: AECL1010

REVISIONS

REV.	DATE	DESCRIPTION	DWN.	CKD.	APP.

PND ENGINEERS, INC.
9360 Glacier Highway Ste 100
Juneau, Alaska 99801
Phone: 907-586-2093
Fax: 907-586-2099
www.pndengineers.com

DESIGN: MGM CHECKED: MGM
DRAWN: JRW APPROVED: MGM
SCALE: SCALE IN FEET 0 20 40 FT.

STATE OF ALASKA 49TH — Mark G. Morris — May 23, 2019 — No. EE 8613 — REGISTERED PROFESSIONAL ENGINEER
DATE: 5/23/2019

DOWNTOWN WATERFRONT IMPROVEMENTS PHASE I
CBJ CONTRACT NO. DH19-014

SHEET TITLE: **OVERALL SITE PLAN - ELECTRICAL 2 OF 3**

PND PROJECT NO.: 182045 C.A.N. NO.: ~~AECG250~~.DWG

E1.02

NOTES:

1. REMOVE EXISTING LIGHT POLE AND REPLACE WITH TYPE A LUMINAIRE AND LIGHT POLE, SEE DETAILS 1 & 5, SHEET E3.01. BOLT LIGHT POLE BRACKET EXTENSION TO EXISTING ANCHOR BOLTS. BOLT NEW LIGHT POLE TO BRACKET EXTENSION. SEE STRUCTURAL FOR LIGHT POLE BRACKET EXTENSION. SPLICE EXISTING CONDUCTORS TO NEW CONDUCTORS (BRACKET EXTENSION HAS HANDHOLE TO ALLOW THIS WORK). POWER NEW LUMINAIRE FROM NEW CONDUCTORS (3 NO. 12). REUSE EXISTING CONDUCTORS FROM PANEL IN PARKING GARAGE TO POLE BASE (CKT 6, 8 OR 10). SEE LIGHT POLE TABLE, SHEET E3.02. SEE LIMINAIRE SCHEDULE. PROVIDE POLES WITH BANNER ARMS.

GENERAL NOTES (APPLICABLE ALL SHEETS):

1. ALL WORK ON ALL SHEETS IS NEW UNLESS OTHERWISE NOTED.
2. PERFORM ALL WORK PER THE 2017 NATIONAL ELECTRIC CODE (NEC) AND OTHER APPLICABLE NATIONAL, STATE, AND LOCAL CODES AND STANDARDS. PROVIDE EQUIPMENT AND AN INSTALLATION THAT COMPLIES WITH ARTICLE 555 OF THE NEC.
3. MOUNT ALL OF THE ELECTRICAL EQUIPMENT IN THE LOCATIONS SHOWN ON THE CIVIL DRAWINGS. LOCATIONS SHOWN ON THE ELECTRICAL DRAWINGS ARE APPROXIMATE.
4. SEE CIVIL AND STRUCTURAL DRAWINGS FOR MOUNTING ALL ELECTRICAL EQUIPMENT AS WELL AS ELECTRICAL DRAWINGS. MOUNTING POSTS, LIGHT POLE BASE DETAILS, CABLE TRAY, PEDESTAL FRAMES, ETC. ARE DETAILED ON THE CIVIL DRAWINGS. MOUNT ELECTRICAL EQUIPMENT AS SHOWN ON BOTH ELECTRICAL AND CIVIL DRAWINGS. SIZE MOUNTING BOLTS, BRACKETS, HARDWARE, ETC. FOR A SAFETY FACTOR OF 5 MINIMUM. ALL EQUIPMENT AND MATERIALS SHALL NOT MOVE WHEN PULLED OR PUSHED BY HAND (EXCEPT CABLES AND FLEXIBLE CONDUIT). SECURE ALL CONDUIT WITHIN 12 INCHES OF END OF CONDUIT AND AS REQUIRED PER NEC.
5. FIELD TREAT ALL HOT DIPPED GALVANIZED MATERIALS THAT ARE CUT, DRILLED, SCRATCHED OR DAMAGED. SEE CIVIL FOR FIELD TREATMENT.
6. ALL CONDUCTORS SHALL BE COPPER, ALL INSULATION SHALL BE 600V RATED. TYPE XHHW FOR CONDUCTORS NOT IN A CABLE. ALL CABLES SHALL BE THE TYPE SPECIFIED, NO SUBSTITUTIONS.
7. IF GALVANIZED THREADS ARE CHASED IN ORDER TO BE USABLE, TREAT CHASED THREADS WITH BRAKE CLEANER, THEN COAT WITH MARINE TRAILER WHEEL BEARING GREASE BEFORE APPLYING A STAINLESS STEEL WASHER AND NUT. APPLY GREASE AFTER DRILLING AND TAPPING.
8. USE 316 STAINLESS STEEL BOLTS, WASHERS, ETC. TO MOUNT ELECTRICAL EQUIPMENT AND STRUT CHANNEL. ALL FASTENERS AND OTHER EXPOSED HARDWARE SHALL BE 316 STAINLESS STEEL. ALL STAINLESS STEEL SHALL BE 316 STAINLESS STEEL.
9. SEAL ALL PENETRATIONS IN ELECTRICAL EQUIPMENT WITH UL LISTED HARDWARE FOR SUCH USE. USE RUBBER OR SILICONE WASHERS IN ADDITION TO STAINLESS STEEL WASHERS.
10. USE 316 STAINLESS STEEL SUPPORT CHANNEL (UNISTRUT) TO SUPPORT CONDUIT, PANELS, CONTACTORS, ENCLOSURES, AND ALL OTHER ELECTRICAL EQUIPMENT. TRIM SUPPORT CHANNEL 1/4" SHORT OF EDGE OF EQUIPMENT AND POSTS. SAND END OF SUPPORT CHANNEL SMOOTH. USE CABLE SUPPORTS THAT COMPLY WITH 555.13(4). USE CUSHION STRAPS WHEN SUPPORTING CABLE TO SUPPORT CHANNEL. PROVIDE SUPPORT CHANNEL UNDER DOCK, SPACING AND QUANTITY AS REQUIRED.
11. PROVIDE OXIDE INHIBITING COMPOUND ON ALL ELECTRICAL CONNECTIONS. BURNDY PENETROX TYPE A OR E AS REQUIRED.
12. ALL LUGS AND ELECTRICAL TERMINALS SHALL BE COPPER OR TIN PLATED HIGH CONDUCTIVE ALUMINUM.
13. THE PART NUMBERS SHOWN ON THE DRAWINGS ARE NOT TO BE USED AS A BILL OF MATERIALS. VERIFY ALL PART NUMBERS ARE CORRECT PRIOR TO ORDERING, VERIFY ALL REQUIRED OR NECESSARY ACCESSORIES, FEATURES, MATERIAL TYPE, ETC. ARE INCLUDED.
14. BUILD THE PROJECT AS DESIGNED. DO NOT ASSUME THE DESIGN WILL BE CHANGED AT THE CONTRACTOR'S REQUEST.
15. PROVIDE CONDUIT BODIES IN ALL CONDUIT RUNS AS REQUIRED FOR NUMBER OF BENDS AND AS NEEDED.
16. USE RIGID STEEL CONDUIT WHERE IMPRACTICAL TO USE SCHEDULE 80 PVC DUE TO SPACING BETWEEN SUPPORTS OR OTHER FACTORS.

1 OVERALL SITE PLAN - ELECTRICAL

CITY & BOROUGH OF JUNEAU — DOCKS & HARBORS

MORRIS ENGINEERING GROUP INC
2375 Jordan Avenue #7, Juneau, AK 99801
Phone: 907-789-3350, License: AECL1010

REVISIONS

REV.	DATE	DESCRIPTION	DWN.	CKD.	APP.

PND ENGINEERS, INC.
9360 Glacier Highway Ste 100
Juneau, Alaska 99801
Phone: 907-586-2093
Fax: 907-586-2099
www.pndengineers.com

DESIGN: MGM CHECKED: MGM
DRAWN: JRW APPROVED: MGM
SCALE: SCALE IN FEET 0 20 40 FT.

STATE OF ALASKA 49TH — Mark G. Morris, May 23, 2019, No. EE 8613, REGISTERED PROFESSIONAL ENGINEER
DATE: 5/23/2019

DOWNTOWN WATERFRONT IMPROVEMENTS
PHASE I
CBJ CONTRACT NO. DH19-014

SHEET TITLE:
OVERALL SITE PLAN - ELECTRICAL 3 OF 3

PND PROJECT NO.: 182045 C.A.N. NO.: ~~AEGC250~~.DWG

E1.03

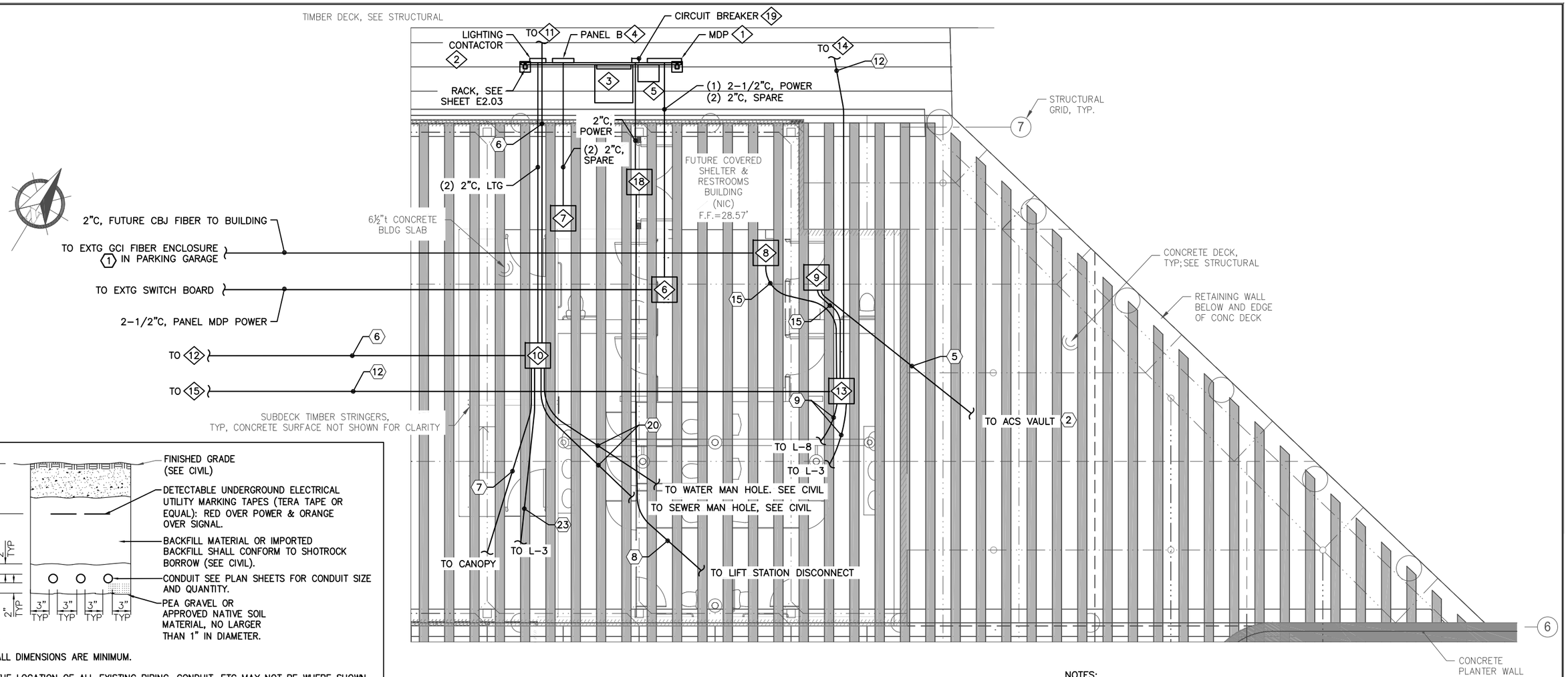

NOTES:

1. SEE SHEET E1.02 FOR # KEY NOTES.
2. SEE EQUIPMENT SCHEDULE, SHEET E2.02 FOR # EQUIPMENT NUMBERS.

1 PARTIAL CONCRETE DECK - ELECTRICAL

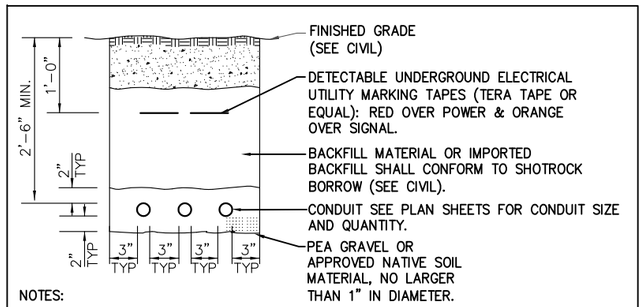

NOTES:

1. ALL DIMENSIONS ARE MINIMUM.
2. THE LOCATION OF ALL EXISTING PIPING, CONDUIT, ETC MAY NOT BE WHERE SHOWN AND MAY NOT BE SHOWN. ALL LOCATIONS THAT ARE SHOWN ARE APPROXIMATE AND SHOULD BE FIELD VERIFIED. OBTAIN UTILITY LOCATES PRIOR TO DIGGING. DIG WITH CAUTION. AVOID WATER, SEWER, DRAINAGE PIPES AND OTHER CONFLICTS.
3. MAINTAIN 12 INCHES MINIMUM SEPARATION (ALL DIRECTIONS) BETWEEN POWER AND OTHER EXISTING CONDUITS, PIPES, CONCRETE STRUCTURE, VAULTS, ETC.
4. CUT & REPLACE EXISTING ASPHALT, CONCRETE, CONCRETE CURB, GUTTER, SIDEWALK, ETC. AS NECESSARY.
5. ALL TRENCHES SHALL BE 18" WIDE MIN. COMPACT BACKFILL PER CIVIL. TOP 6" OF MATERIAL PER CIVIL.
6. POWER UTILITY CONDUIT SHALL BE BURIED AT A MINIMUM OF 3'.
7. MODIFY CONDUIT BURIAL DEPTH WHERE SHOWN ON DRAWINGS.
8. MAINTAIN 36" MINIMUM LATERAL SEPARATION FROM WATER AND SEWER LINES. MAINTAIN 12" SEPARATION BETWEEN ELECTRICAL UTILITY CONDUITS.

2 TRENCH DETAIL
NO SCALE

CITY & BOROUGH OF JUNEAU DOCKS & HARBORS

MORRIS ENGINEERING GROUP INC
2375 Jordan Avenue #7, Juneau, AK 99801
Phone: 907-789-3350, License: AECL1010

REVISIONS

REV.	DATE	DESCRIPTION	DWN.	CKD.	APP.

PND ENGINEERS, INC.
9360 Glacier Highway Ste 100
Juneau, Alaska 99801
Phone: 907-586-2093
Fax: 907-586-2099
www.pndengineers.com

DESIGN: MGM CHECKED: MGM
DRAWN: JRW APPROVED: MGM
SCALE:

STATE OF ALASKA 49TH Mark G. Morris May 23, 2019 No. EE 8613 REGISTERED PROFESSIONAL ENGINEER
DATE: 5/23/2019

DOWNTOWN WATERFRONT IMPROVEMENTS PHASE I
CBJ CONTRACT NO. DH19-014

SHEET TITLE:
PARTIAL CONCRETE DECK & TRENCH DETAIL - ELECTRICAL

PND PROJECT NO.: 182045 C.A.N. NO.: AECC250

E1.04

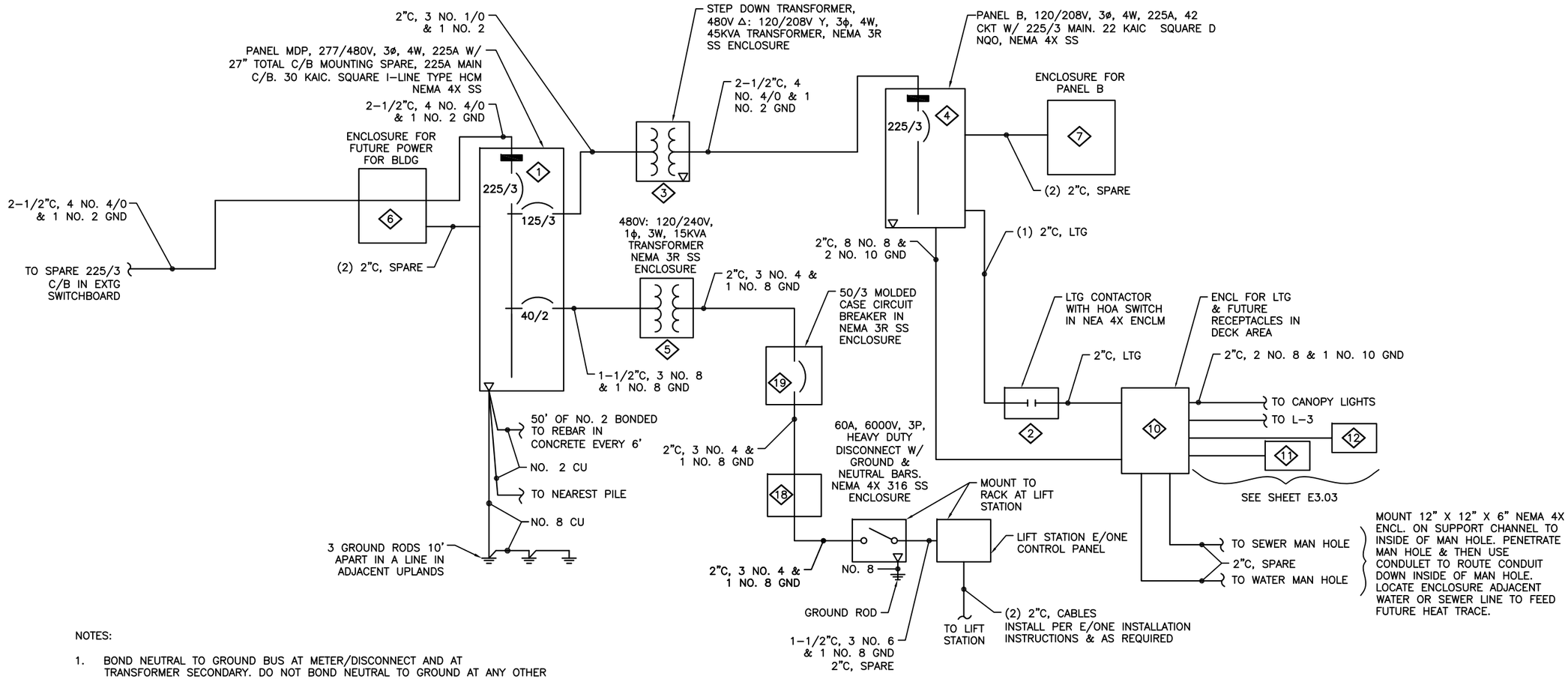

NOTES:

1. BOND NEUTRAL TO GROUND BUS AT METER/DISCONNECT AND AT TRANSFORMER SECONDARY. DO NOT BOND NEUTRAL TO GROUND AT ANY OTHER POINT. DO NOT BOND THE NEUTRAL TO GROUND AT GENSET.
2. THE TRANSFORMER SECONDARY FEEDER THAT FEEDS PANEL G SHALL BE NO MORE THAN 10' LONG. SAME FOR FEEDER TO 5D/3 C/B FROM TRANSFORMER 5
3. SEE EQUIPMENT SCHEDULE, SHEET E2.02 FOR # EQUIPMENT NUMBERS.

1 SINGLE LINE DIAGRAM
NO SCALE

CITY & BOROUGH OF JUNEAU — DOCKS & HARBORS

MORRIS ENGINEERING GROUP INC
2375 Jordan Avenue #7, Juneau, AK 99801
Phone: 907-789-3350, License: AECL1010

REVISIONS

REV.	DATE	DESCRIPTION	DWN.	CKD.	APP.

PND ENGINEERS, INC.
9360 Glacier Highway Ste 100
Juneau, Alaska 99801
Phone: 907-586-2093
Fax: 907-586-2099
www.pndengineers.com

DESIGN: MGM CHECKED: MGM
DRAWN: JRW APPROVED: MGM
SCALE:

STATE OF ALASKA 49TH — Mark G. Morris May 23, 2019 No. EE 8613 — REGISTERED PROFESSIONAL ENGINEER
DATE: 5/23/2019

DOWNTOWN WATERFRONT IMPROVEMENTS PHASE I
CBJ CONTRACT NO. DH19-014

SHEET TITLE: **SINGLE LINE DIAGRAM**

PND PROJECT NO.: 182045 C.A.N. NO.: AECC250

E2.01

EQUIPMENT SCHEDULE

1. PANEL MDP, MOUNT TOP AT 72" AFG, SQUARE D I-LINE. 277/480V, 3ϕ, 4 WIRE, 225 AMP, W/ 225 AMP MAIN. SEE SINGLE LINE DIAGRAM, E2.01.
2. LIGHTING CONTACTOR. 30A, 30 KAIC, 6 POLE LIGHTING CONTACTOR WITH HOA SWITCH. CONTROL ON AUTOSIDE WITH NEMA RATED PHOTOCELL MOUNTED ON CONDUIT ON RACK AT 6'. MOUNT IN J-BOX TO SHIELD FROM SITE LIGHTING. USE CONTACTOR TO CONTROL EXTERIOR LIGHTS. SEE LIGHTING CONTROL SCHEMATIC, SHEET E3.03.
3. STEP DOWN TRANSFORMER. 480VΔ:120/208V Y, 3ϕ, 4 WIRE, 45 KVA. FLOOR MOUNT WITH COPPER WINDINGS. SQUARE D EX45ST3HCU. BOLT TO PLATE. DRILL AND TAP PLATE. SEE STRUCTURAL.
4. PANEL B. MOUNT TOP AT 72" AFF. SQUARE D NQO. SERIES. 120/280V, 3ϕ, 4 WIRE, 225 AMP, W/ 225A MAIN, 22 KAIC, 42 CKT. SEE SINGLE LINE DIAGRAM, E2.01.
5. NEMA 3R TRANSFORMER. STAINLESS STEEL ENCLOSURE, 480V:120/240V 1ϕ, 3W, 15 KVA. BOLT TO PLATE. DRILL AND TAP PLATE. SEE STRUCTURAL.
6. 24" X 24" X 12" NEMA 4X ENCLOSURE FOR FUTURE POWER TO BUILDING MOUNT TO SUPPORT CHANNEL ON UNDERSIDE OF DECK SPANNING BEAMS.
7. 24" X 24" X 12" NEMA 4X ENCLOSURE FOR PANEL B MOUNT TO SUPPORT CHANNEL ON UNDERSIDE OF DECK SPANNING BEAMS.
8. 24" X 24" X 12" NEMA 4X ENCLOSURE FOR FUTURE CBJ NETWORK FIBER CABLE TO BUILDING. MOUNT TO UNDERSIDE OF DECK ON SUPPORT CHANNEL SPANNING BEAMS.
9. 24" X 24" X 12" NEMA 4X ENCLOSURE, MOUNT ON SUPPORT CHANNEL TO UNDERSIDE OF DECK (SAME FOR OTHER ENCLOSURES). ACS TELEPHONE. MOUNT TO UNDERSIDE OF DECK ON SUPPORT CHANNEL SPANNING BEAMS.
10. 24" X 24" X 12" NEMA 4X ENCLOSURE FOR FUTURE LIGHTING/RECEPTACLES IN DECK AREA. MOUNT TO UNDERSIDE OF DECK WITH SUPPORT CHANNEL.
11. 24" X 24" X 12" NEMA 4X ENCLOSURE FOR FUTURE LIGHTING/RECEPTACLES IN DECK AREA. MOUNT TO UNDERSIDE OF DECK WITH SUPPORT CHANNEL.
12. 24" X 24" X 12" NEMA 4X ENCLOSURE FOR FUTURE LIGHTING/RECEPTACLES IN DECK AREA. MOUNT TO UNDERSIDE OF DECK WITH SUPPORT CHANNEL.
13. 24" X 24" X 12" NEMA 4X ENCLOSURE FOR FUTURE CAMERA. MOUNT TO UNDERSIDE OF DECK ON SUPPORT CHANNEL SPANNING BEAMS.
14. 24" X 24" X 12" NEMA 4X ENCLOSURE FOR FUTURE CAMERA. MOUNT TO UNDERSIDE OF DECK ON SUPPORT CHANNEL SPANNING BEAMS.
15. 24" X 24" X 12" NEMA 4X ENCLOSURE FOR FUTURE CAMERA. MOUNT TO UNDERSIDE OF DECK ON SUPPORT CHANNEL SPANNING BEAMS.
16. LIFT STATION CONTROL PANEL, E/ONE, SEE CIVIL. MOUNT TO RACK, DETAIL 2, SHEET E2.03.
17. HEAVY DUTY DISCONNECT, 60A, 600V, 3P, WITH GROUND AND NEUTRAL BARS. NEMA 4X 316 SS ENCLOSURE. MOUNT TO RACK, DETAIL 2, SHEET E2.03.
18. 24" X 24" X 12" NEMA 4X ENCLOSURE FOR LIFT STATION POWER MOUNT TO SUPPORT CHANNEL ON UNDERSIDE OF DECK SPANNING BEAMS.
19. 50/3 MOLDED CASE CIRCUIT BREAKER IN NEMA 3R SS ENCLOSURE. MOUNT TO RACK, DETAIL 1, E2.03

PANEL B		SIZE	VOLTS, PHASE		MOUNTING		MAIN	LOCATION	
		225A	120/208V, 3ϕ, 4W		SURFACE		225/3	RACK ON DECK	
CKT NO.	DESCRIPTION	C/B SIZE	KVA CKT	Aϕ	Bϕ	Cϕ	KVA CKT	C/B SIZE	DESCRIPTION	CKT NO.
1	RECEPTACLE IN DECK (11)	20/1	0.0	0.4			0.4	20/2	CANOPY LIGHTING	2
3	RECEPTACLE IN DECK (11)	20/1	0.0		0.4		0.4	–	–	4
5	RECEPTACLE IN DECK (12)	20/1	0.0			0.5	0.5	20/2	LIGHTING IN PARKING AREA	6
7	RECEPTACLE IN DECK (12)	20/1	0.0	0.5			0.5	–	–	8
9	SPARE		0.0		0.0		0.0	20/2	LUMINAIRES ON DECK (11)	10
11			0.0			0.0	0.0	–	–	12
13			0.0	0.0			0.0	20/2	LUMINAIRES ON DECK (12)	14
15			0.0		0.0		0.0	–	–	16
17			0.0			0.0	0.0	20/1	SPARE	18
19			0.0	0.0			0.0			20
21			0.0		0.0		0.0			22
23			0.0			0.0	0.0			24
25			0.0	0.0			0.0			26
27			0.0		0.0		0.0			28
29			0.0			0.0	0.0			30
31			0.0	0.0			0.0			32
33			0.0		0.0		0.0			34
35			0.0			0.0	0.0			36
37			0.0	0.0			0.0			38
39			0.0		0.0		0.0			40
41			0.0			0.0	0.0			42
TOTAL CONNECTED LOAD = 1.8 KVA/ 5 AMPS				0.9	0.4	0.5				

PANEL MDP		SIZE	VOLTS, PHASE		MOUNTING		MAIN	LOCATION	
		225A	277/480V, 3ϕ, 4W		SURFACE		225/3	RACK ON DECK	
CKT NO.	DESCRIPTION	C/B SIZE	KVA CKT	Aϕ	Bϕ	Cϕ	KVA CKT	C/B SIZE	DESCRIPTION	CKT NO.
1			0.0	1.0			1.0	125/3	PANEL B VIA TRANSFORMER	2
3			0.0		1.0		1.0	–	–	4
5			0.0			1.0	1.0	–	–	6
7			0.0	3.5			3.5	40/2	E/ONE LIFT STATION	8
9			0.0		3.5		3.5	–	–	10
11			0.0			0.0	0.0			12
13			0.0	0.0			0.0			14
15			0.0		0.0		0.0			16
17			0.0			0.0	0.0			18
TOTAL CONNECTED LOAD = 10.0 KVA/ 12 AMPS				4.5	4.5	1.0				

* PANEL MDP IS A PANEL WITH 27 INCHES TOTAL CIRCUIT BREAKER MOUNTING SPACE

CITY & BOROUGH OF JUNEAU — DOCKS & HARBORS

MORRIS ENGINEERING GROUP INC
2375 Jordan Avenue #7, Juneau, AK 99801
Phone: 907-789-3350, License: AECL1010

REVISIONS

REV.	DATE	DESCRIPTION	DWN.	CKD.	APP.

PND ENGINEERS, INC.
9360 Glacier Highway Ste 100
Juneau, Alaska 99801
Phone: 907-586-2093
Fax: 907-586-2099
www.pndengineers.com

DESIGN: MGM CHECKED: MGM
DRAWN: JRW APPROVED: MGM
SCALE:

STATE OF ALASKA 49TH — Mark G. Morris May 23, 2019 No. EE 8613 — REGISTERED PROFESSIONAL ENGINEER
DATE: 5/23/2019

DOWNTOWN WATERFRONT IMPROVEMENTS PHASE I
CBJ CONTRACT NO. DH19-014

SHEET TITLE: **EQUIPMENT & PANEL SCHEDULES**

PND PROJECT NO.: 182045 C.A.N. NO.: AECC250

E2.02

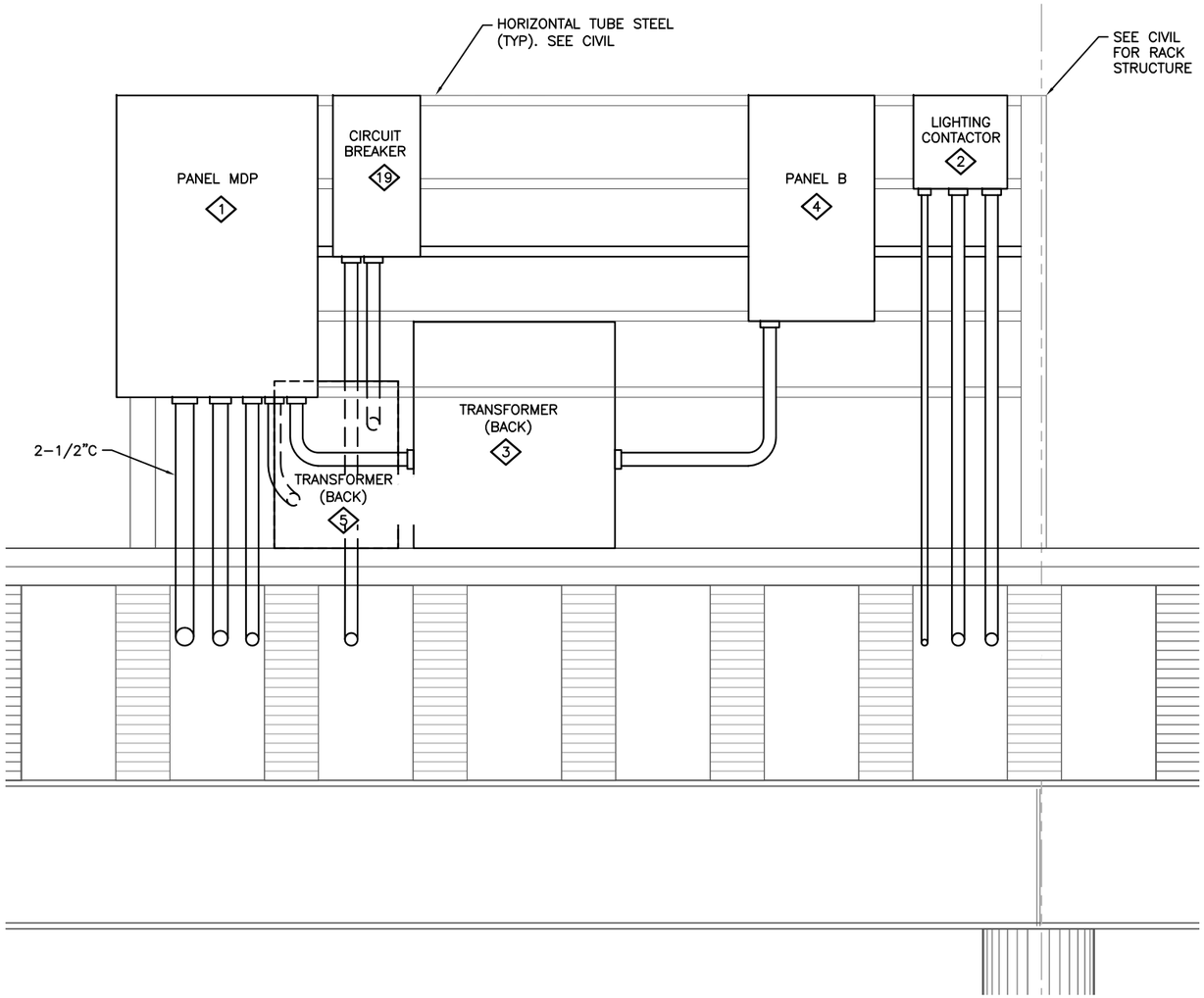

1 ELECTRICAL RACK ELEVATION

3" 6" 1' 2'

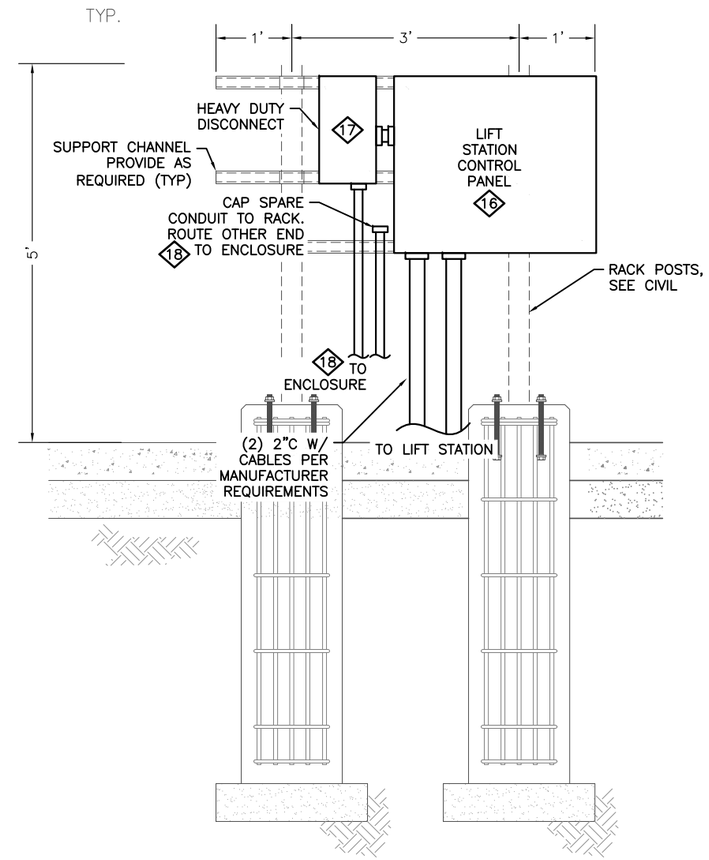

2 LIFT STATION SUPPORT RACK

3" 6" 1' 2'

NOTE:

1. SEE EQUIPMENT SCHEDULE, SHEET E2.02 FOR # EQUIPMENT NUMBERS.

CITY & BOROUGH OF JUNEAU — DOCKS & HARBORS

MORRIS ENGINEERING GROUP INC
2375 Jordan Avenue #7, Juneau, AK 99801
Phone: 907-789-3350, License: AECL1010

REVISIONS

REV.	DATE	DESCRIPTION	DWN.	CKD.	APP.

PND ENGINEERS, INC.
9360 Glacier Highway Ste 100
Juneau, Alaska 99801
Phone: 907-586-2093
Fax: 907-586-2099
www.pndengineers.com

DESIGN: MGM CHECKED: MGM
DRAWN: JRW APPROVED: MGM
SCALE:

STATE OF ALASKA 49TH — Mark G. Morris — May 23, 2019 — No. EE 8613 — REGISTERED PROFESSIONAL ENGINEER
DATE: 5/23/2019

DOWNTOWN WATERFRONT IMPROVEMENTS PHASE I
CBJ CONTRACT NO. DH19-014

SHEET TITLE: **ELECTRICAL RACK ELEVATIONS**

PND PROJECT NO.: 182045 C.A.N. NO.: AECC250

E2.03

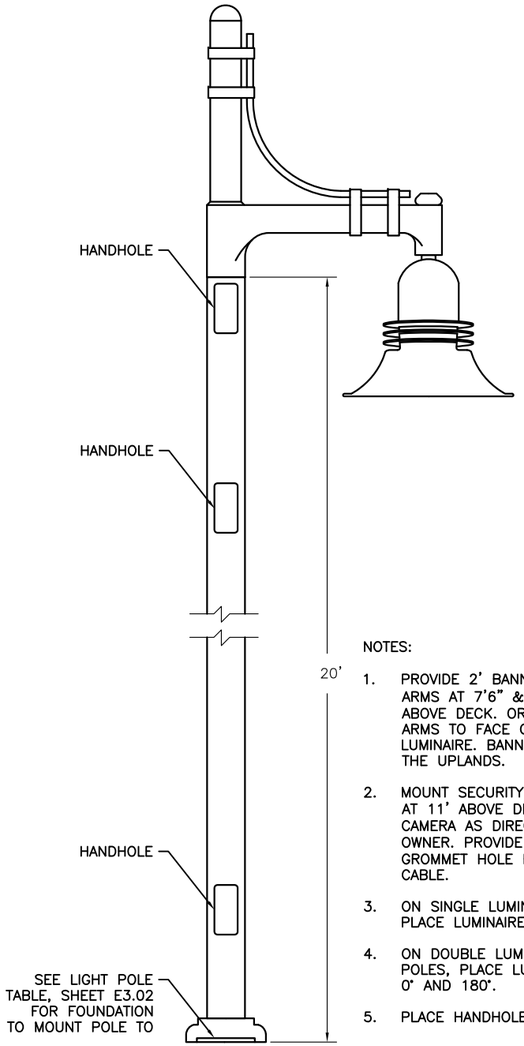

NOTES:

1. PROVIDE 2' BANNER ARMS. ARMS AT 7'6" & 12'6" ABOVE DECK. ORIENT BANNER ARMS TO FACE OPPOSITE LUMINAIRE. BANNERS FACE THE UPLANDS.
2. MOUNT SECURITY CAMERAS AT 11' ABOVE DECK. ORIENT CAMERA AS DIRECTED BY OWNER. PROVIDE 3/4" GROMMET HOLE FOR CAMERA CABLE.
3. ON SINGLE LUMINAIRE POLES, PLACE LUMINAIRE AT 0°.
4. ON DOUBLE LUMINAIRE POLES, PLACE LUMINAIRES AT 0° AND 180°.
5. PLACE HANDHOLES AT 90°.

① TYPE "A" & "B" LUMINAIRE ELEVATION
NO SCALE

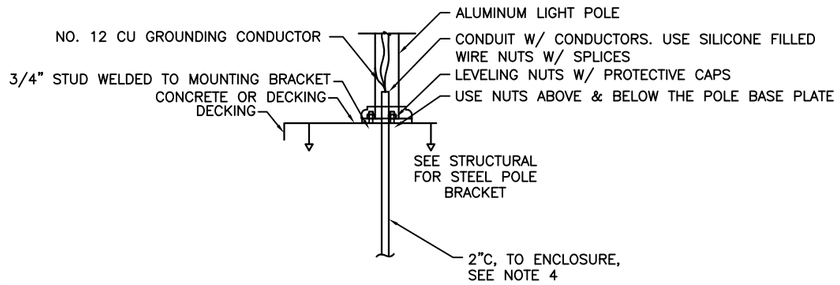

NOTES:

1. COORDINATE WITH OTHER TRADES TO ENSURE THAT THE STUD PATTERN ON THE MOUNTING BRACKET MATCHES LIGHT POLE BASE BOLT HOLES.
2. SPLICE CONDUCTORS INSIDE POLE ADJACENT TO HANDHOLE IF THERE IS ROOM. USE COMPRESSION SPLICES WITH HEAT SHRINK. IF THERE IS NO ROOM IN POLE, SPLICE IN J-BOX.
3. LIGHT POLE MOUNTING BRACKETS CHANGE BASED UPON WHERE ON THE STRINGER THEY ARE LOCATED. COORDINATE WITH DOCK FABRICATOR, INSTALLER, AND GENERAL CONTRACTOR FOR THE LOCATION AND TYPE OF MOUNTING BRACKET TO USE FOR EACH POLE. THE TYPE OF MOUNTING BRACKET CHANGES BASED UPON THE DOCK STRUCTURE. SEE STRUCTURAL SHEET S1.05 FOR THE TYPES OF MOUNTING BRACKETS. SEE TABLE FOR SPECIFIC BRACKET TO BE USED.
4. MOUNT A 12" X 12" X 6" NEMA 4X STAINLESS STEEL ENCLOSURE TO A GLULAM STRINGER BELOW LIGHT POLE FOUNDATION. ROUTE 2" CONDUIT FROM ENCLOSURE UP TO CENTER OF LIGHT POLE.

③ STEEL BRACKET LIGHT POLE BASE DETAIL
NO SCALE

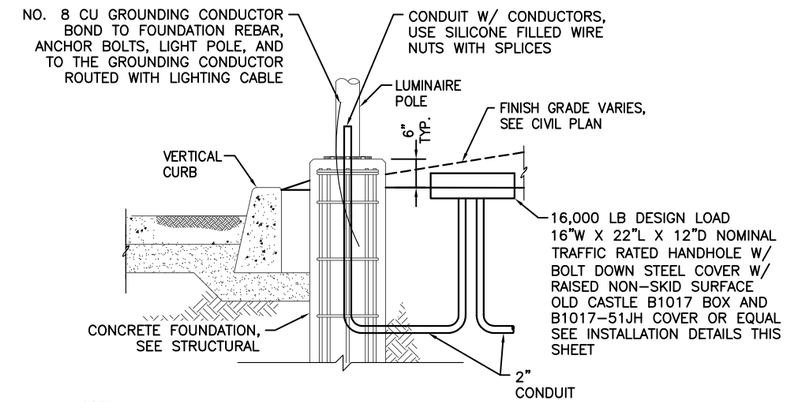

NOTES:

1. SEE CIVIL FOR DETAILS NOT CALLED OUT.
2. PROVIDE 3/4" ANCHOR BOLTS. 24" WITH LARGE WASHERS AT HEAD. ASTM A-36 WITH MINIMUM YIELD STRENGTH OF 36 KIPS. MOUNT POLE TO LEVELING NUTS ON ANCHOR BOLTS.

④ CONCRETE FOUNDATION LIGHT POLE BASE DETAIL
NO SCALE

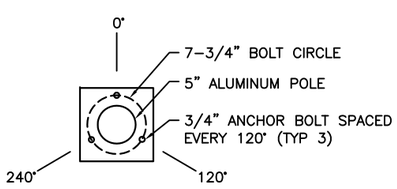

② BOLT CIRCLE DETAIL
NO SCALE

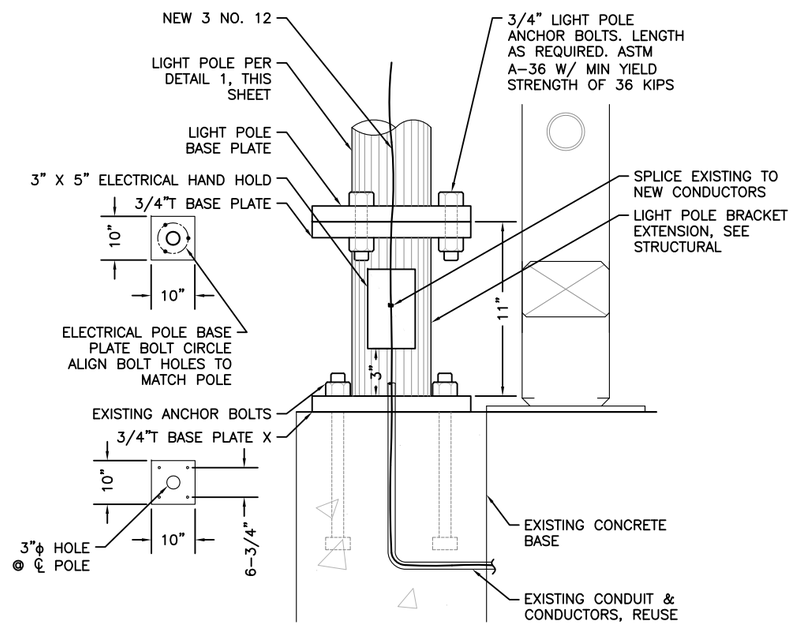

⑤ BRACKET EXTENSION LIGHT POLE BASE DETAIL
NOTE: USE FOR LIGHT POLE NOS. L-17 TO L-29
NO SCALE

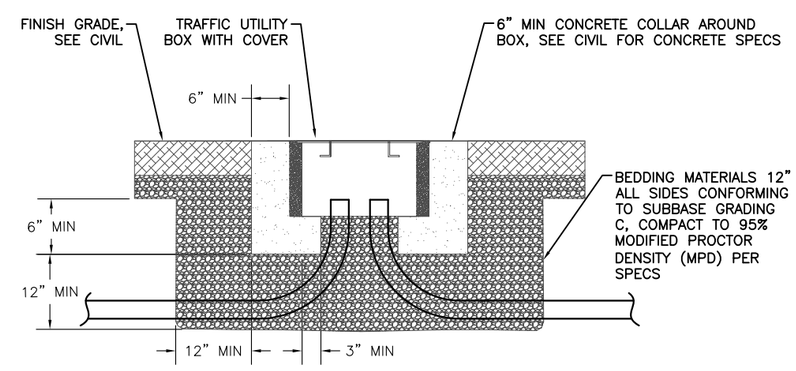

⑥ HANDHOLE DETAIL
NO SCALE

CITY & BOROUGH OF JUNEAU — DOCKS & HARBORS

MORRIS ENGINEERING GROUP INC
2375 Jordan Avenue #7, Juneau, AK 99801
Phone: 907-789-3350, License: AECL1010

REVISIONS

REV.	DATE	DESCRIPTION	DWN.	CKD.	APP.

PND ENGINEERS, INC.
9360 Glacier Highway Ste 100
Juneau, Alaska 99801
Phone: 907-586-2093
Fax: 907-586-2099
www.pndengineers.com

DESIGN: MGM CHECKED: MGM
DRAWN: JRW APPROVED: MGM
SCALE:

STATE OF ALASKA — 49TH — Mark G. Morris — May 23, 2019 — No. EE 8613 — REGISTERED PROFESSIONAL ENGINEER
DATE: 5/23/2019

DOWNTOWN WATERFRONT IMPROVEMENTS PHASE I
CBJ CONTRACT NO. DH19-014

SHEET TITLE:
20' POLE DETAILS

PND PROJECT NO.: 182045 C.A.N. NO.: AECC250

E3.01

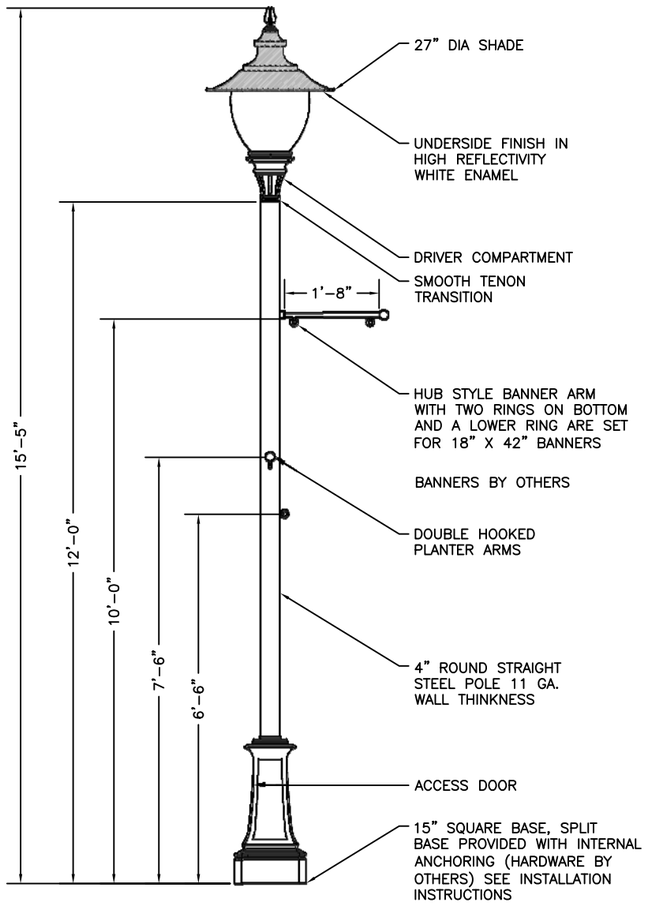

1 TYPE "C" LUMINAIRE ELEVATION

4" 8" 16" 32"

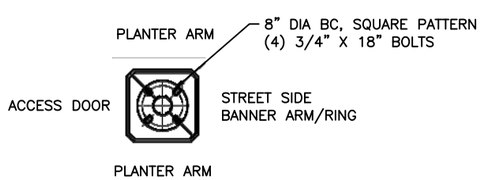

2 BOLT CIRCLE DETAIL

4" 8" 16" 32"

LIGHT POLE TABLE

LIGHT POLE NO.	FOUNDATION TYPE (SEE STRUCTURAL)	FOUNDATION DESCRIPTION	REMARKS	BANNER ARMS
L-1	TYPE 6	CONCRETE FOUNDATION	SEE SHEET E3.01, DETAILS 1 & 4	NO
L-2	TYPE 4	CONCRETE FOUNDATION	SEE SHEET E3.01, DETAILS 1 & 4	NO
L-3	TYPE 4	CONCRETE FOUNDATION	SEE SHEET E3.01, DETAILS 1 & 4	NO
L-4	TYPE 5	STEEL BRACKET	SEE SHEET E3.01, DETAILS 1 & 3	NO
L-5	TYPE 3	STEEL BRACKET	SEE SHEET E3.01, DETAILS 1 & 3	YES
L-6	TYPE 3	STEEL BRACKET	SEE SHEET E3.01, DETAILS 1 & 3	YES
L-7	TYPE 3	STEEL BRACKET	SEE SHEET E3.01, DETAILS 1 & 3	YES
L-8	TYPE 3	STEEL BRACKET	SEE SHEET E3.01, DETAILS 1 & 3	YES
L-9	TYPE 3	STEEL BRACKET	SEE SHEET E3.01, DETAILS 1 & 3	YES
L-10	TYPE 3	STEEL BRACKET	SEE SHEET E3.01, DETAILS 1 & 3	YES
L-11	TYPE 1	STEEL BRACKET	SEE SHEET E3.01, DETAILS 1 & 3	NO
L-12	TYPE 1	STEEL BRACKET	SEE SHEET E3.01, DETAILS 1 & 3	NO
L-13	TYPE 1 SIM	STEEL BRACKET	SEE SHEET E3.01, DETAILS 1 & 3	NO
L-14	TYPE 7	CONCRETE FOUNDATION	SEE SHEET E3.01, DETAILS 1 & 4 **	NO
L-15	TYPE 7	CONCRETE FOUNDATION	SEE SHEET E3.01, DETAILS 1 & 4	NO
L-16	TYPE 6	CONCRETE FOUNDATION	SEE SHEET E3.01, DETAIL 4 & DETAIL 1, THIS SHEET	YES
L-17	TYPE 3	BRACKET EXTENSION	SEE SHEET E3.01, DETAILS 1 & 5	YES
L-18	TYPE 3	BRACKET EXTENSION	SEE SHEET E3.01, DETAILS 1 & 5	YES
L-19	TYPE 3	BRACKET EXTENSION	SEE SHEET E3.01, DETAILS 1 & 5	YES
L-20	TYPE 3	BRACKET EXTENSION	SEE SHEET E3.01, DETAILS 1 & 5	YES
L-21	TYPE 3	BRACKET EXTENSION	SEE SHEET E3.01, DETAILS 1 & 5	YES
L-22	TYPE 3	BRACKET EXTENSION	SEE SHEET E3.01, DETAILS 1 & 5	YES
L-23	TYPE 3	BRACKET EXTENSION	SEE SHEET E3.01, DETAILS 1 & 5	YES
L-24	TYPE 3	BRACKET EXTENSION	SEE SHEET E3.01, DETAILS 1 & 5	YES
L-25	TYPE 3	BRACKET EXTENSION	SEE SHEET E3.01, DETAILS 1 & 5	YES
L-26	TYPE 3	BRACKET EXTENSION	SEE SHEET E3.01, DETAILS 1 & 5	YES
L-27	TYPE 3	BRACKET EXTENSION	SEE SHEET E3.01, DETAILS 1 & 5	YES
L-28	TYPE 3	BRACKET EXTENSION	SEE SHEET E3.01, DETAILS 1 & 5	YES
L-29	TYPE 3	BRACKET EXTENSION	SEE SHEET E3.01, DETAILS 1 & 5	YES

** NO HANDHOLE

LUMINAIRE SCHEDULE

TYPE	DESCRIPTION	MANUFACTURER	LAMPS	REMARKS
A	20' LIGHT POLE, ARM, & LUMINAIRE WITH FLUTED FULL CUTOFF SHADE, TYPE III DISTRIBUTION, BLACK	COOPER INVUE EPIC MEDIUM MODERN SERIES EMM-E04-LED-E1-T3-SR-FL-BK-8030 W/VA6110-BK (SINGLE ARM) OR VA6117-BK (DOUBLE ARM) AND ARX-ST12-NGN4 ALUMINUM POLE	LED, 3,000K, 80 CRI, 11,700 LUMENS	NO SUBSTITUTIONS, PROVIDE WITH 120-277V DRIVER. MOUNT SECURITY CAMERAS TO POLE AT 11' AFG, USE CAMERA POLE MOUNT BRACKET WITH STAINLESS STEEL BAND, SEE DETAIL. MOUNT BANNER ARMS AT 12'6" & 7'6", SEE DETAILS.
B	20' LIGHT POLE, ARM, & LUMINAIRE WITH FLUTED FULL CUTOFF SHADE, TYPE IV DISTRIBUTION, BLACK	COOPER INVUE EPIC MEDIUM MODERN SERIES EMM-E04-LED-E1-T4-SR-FL-BK-8030 W/VA6110-BK (SINGLE ARM) OR VA6117-BK (DOUBLE ARM) AND ARX-ST12-NGN4 ALUMINUM POLE	LED, 3,000K, 80 CRI, 11,500 LUMENS	NO SUBSTITUTIONS, PROVIDE WITH 120-277V DRIVER. MOUNT SECURITY CAMERAS TO POLE AT 11' AFG, USE CAMERA POLE MOUNT BRACKET WITH STAINLESS STEEL BAND, SEE DETAIL. MOUNT BANNER ARMS AT 12'6" & 7'6", SEE DETAILS.
C	12' LIGHT POLE W/ POLYCARBONATE ACORN STYLE LED, TYPE III DISTRIBUTOR	STERNBERG LIGHTING M960SRLED-4ARC45T4-MDL03-P/BKT LITE	LED, 3,500K, 5,500 LUMENS, 64 WATTS	MOUNT TO CONCRETE BASE WITH PLANTER ARMS & BANNER ARM PER DETAIL 3, SHEET E3.02
D	TRADITIONAL WALL MOUNTED ARM WITH 45° STAP & LUMINAIRE WITH FLUTED FULL CUTOFF SHADE, TYPE III DISTRIBUTION, BLACK	COOPER INVUE EPIC MEDIUM MODERN SERIES EMM-E04-LED-E1-T3-SR-FL-BK-8030 W/VA6153-BK WITH TRADITIONAL WALL MOUNT ARM WITH 45° STRAP	LED, 3,000K, 80 CRI, 11,500 LUMENS	NO SUBSTITUTIONS. 120/277V DRIVER, WALL MOUNT TO PARKING GARAGE STRUCTURE.
F	1-3/4" DOWNLIGHT WITH ROUND ACRYLIC ACCESSORY. 1.31" X 2.8" DIAMETER TRIM, FROSTED ACRYLIC INSIDE, POLISHED OUTSIDE	CALCULITE FRAME: C2L-09-DL-935-R-Z10U DECORATIVE ELEMENT: D2L-R02	LED, 3,500K 900 LUMENS, 90 CRI	120-277V DRIVER, COORDINATE WITH SOFFIT INSTALLATION FOR CUTTING HOLES IN SOFFIT AND FLUSH MOUNTING. VERIFY CORRECT PARTS ARE BID AND ORDERED FOR A FLUSH INSTALLATION.

CITY & BOROUGH OF JUNEAU DOCKS & HARBORS

MORRIS ENGINEERING GROUP INC
2375 Jordan Avenue #7, Juneau, AK 99801
Phone: 907-789-3350, License: AECL1010

REVISIONS

REV.	DATE	DESCRIPTION	DWN.	CKD.	APP.

PND ENGINEERS, INC.
9360 Glacier Highway Ste 100
Juneau, Alaska 99801
Phone: 907-586-2093
Fax: 907-586-2099
www.pndengineers.com

DESIGN: MGM CHECKED: MGM
DRAWN: JRW APPROVED: MGM
SCALE:

STATE OF ALASKA 49TH Mark G. Morris May 23, 2019 No. EE 8613 REGISTERED PROFESSIONAL ENGINEER
DATE: 5/23/2019

DOWNTOWN WATERFRONT IMPROVEMENTS PHASE I
CBJ CONTRACT NO. DH19-014

SHEET TITLE:
12' POLE DETAILS, LIGHT POLE TABLE & LUMINAIRE SCHEDULE

PND PROJECT NO.: 182045 C.A.N. NO.: AECC250

E3.02

NOTES:

1. SEE SHEET E1.02 FOR (#)
2. SEE EQUIPMENT SCHEDULE, SHEET E2.02 FOR (#) EQUIPMENT NUMBERS.

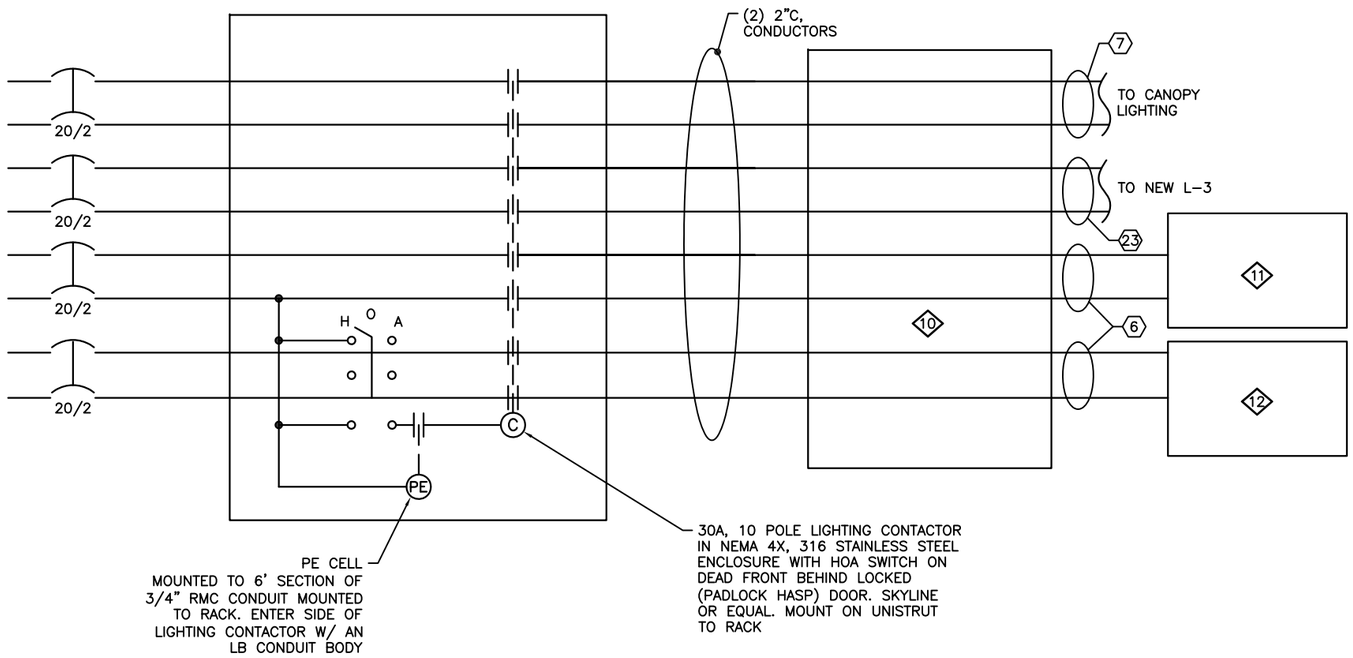

1 SITE LIGHTING CONTROL SCHEMATIC
NOT TO SCALE

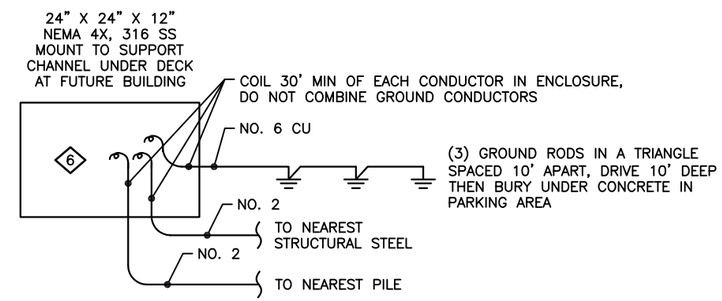

2 FUTURE BUILDING POWER SINGLE LINE DIAGRAM
NOT TO SCALE

CITY & BOROUGH OF JUNEAU DOCKS & HARBORS

MORRIS ENGINEERING GROUP INC
2375 Jordan Avenue #7, Juneau, AK 99801
Phone: 907-789-3350, License: AECL1010

REVISIONS

REV.	DATE	DESCRIPTION	DWN.	CKD.	APP.

PND ENGINEERS, INC.
9360 Glacier Highway Ste 100
Juneau, Alaska 99801
Phone: 907-586-2093
Fax: 907-586-2099
www.pndengineers.com

DESIGN: MGM CHECKED: MGM
DRAWN: JRW APPROVED: MGM
SCALE: NTS

STATE OF ALASKA 49TH
Mark G. Morris
May 23, 2019
No. EE 8613
REGISTERED PROFESSIONAL ENGINEER
DATE: 5/23/2019

DOWNTOWN WATERFRONT IMPROVEMENTS PHASE I
CBJ CONTRACT NO. DH19-014

SHEET TITLE:
LTG CONTROL SCHEMATIC & FUTURE POWER SINGLE LINE

PND PROJECT NO.: 182045 C.A.N. NO.: AECC250

E3.03

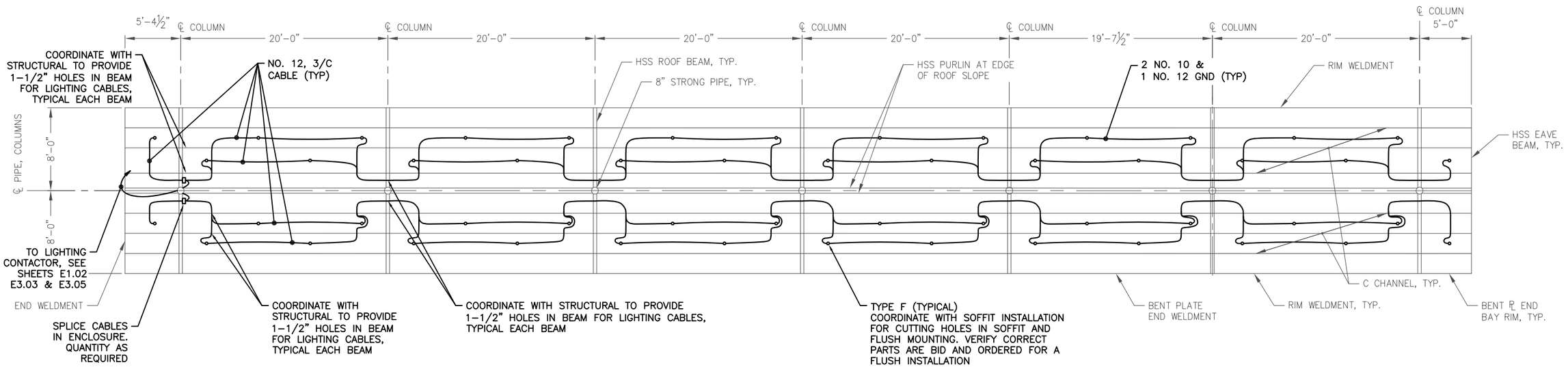

NOTE:

1. ROUTE CONDUIT UNDER DECK, STUB UP INTO COLUMN. SPLICE TO (2) NO. 12, 3/C TYPE 500W OR G-GC CABLE AT HANDHOLE. SEE STRUCTURAL DRAWINGS FOR CANOPY.

① PARKING CANOPY PLAN - ELECTRICAL

30" 5' 10'

CITY & BOROUGH OF JUNEAU — DOCKS & HARBORS

MORRIS ENGINEERING GROUP INC
2375 Jordan Avenue #7, Juneau, AK 99801
Phone: 907-789-3350, License: AECL1010

REVISIONS

REV.	DATE	DESCRIPTION	DWN.	CKD.	APP.

PND ENGINEERS, INC.
9360 Glacier Highway Ste 100
Juneau, Alaska 99801
Phone: 907-586-2093
Fax: 907-586-2099
www.pndengineers.com

DESIGN: MGM CHECKED: MGM
DRAWN: JRW APPROVED: MGM
SCALE:

STATE OF ALASKA 49TH
Mark G. Morris
May 23, 2019
No. EE 8613
REGISTERED PROFESSIONAL ENGINEER
DATE: 5/23/2019

DOWNTOWN WATERFRONT IMPROVEMENTS PHASE I
CBJ CONTRACT NO. DH19-014

SHEET TITLE:
PARKING CANOPY PLAN - ELECTRICAL

PND PROJECT NO.: 182045 C.A.N. NO.: AECC250

E3.04

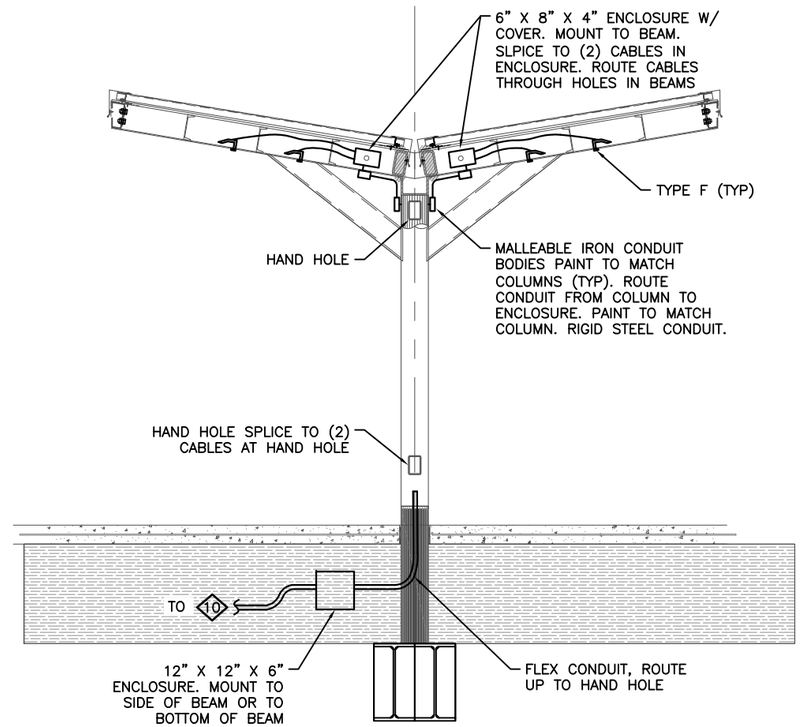

1 TYPICAL PARKING CANOPY SECTION
NOT TO SCALE

CITY & BOROUGH OF JUNEAU DOCKS & HARBORS

MORRIS ENGINEERING GROUP INC
2375 Jordan Avenue #7, Juneau, AK 99801
Phone: 907-789-3350, License: AECL1010

REVISIONS

REV.	DATE	DESCRIPTION	DWN.	CKD.	APP.

PND ENGINEERS, INC.
9360 Glacier Highway Ste 100
Juneau, Alaska 99801
Phone: 907-586-2093
Fax: 907-586-2099
www.pndengineers.com

DESIGN: MGM CHECKED: MGM
DRAWN: JRW APPROVED: MGM
SCALE:

STATE OF ALASKA 49TH
Mark G. Morris
May 23, 2019
No. EE 8613
REGISTERED PROFESSIONAL ENGINEER
DATE: 5/23/2019

DOWNTOWN WATERFRONT IMPROVEMENTS PHASE I
CBJ CONTRACT NO. DH19-014

SHEET TITLE:
PARKING CANOPY SECTIONS AND DETAILS - ELECTRICAL

PND PROJECT NO.: 182045 C.A.N. NO.: AECC250

E3.05

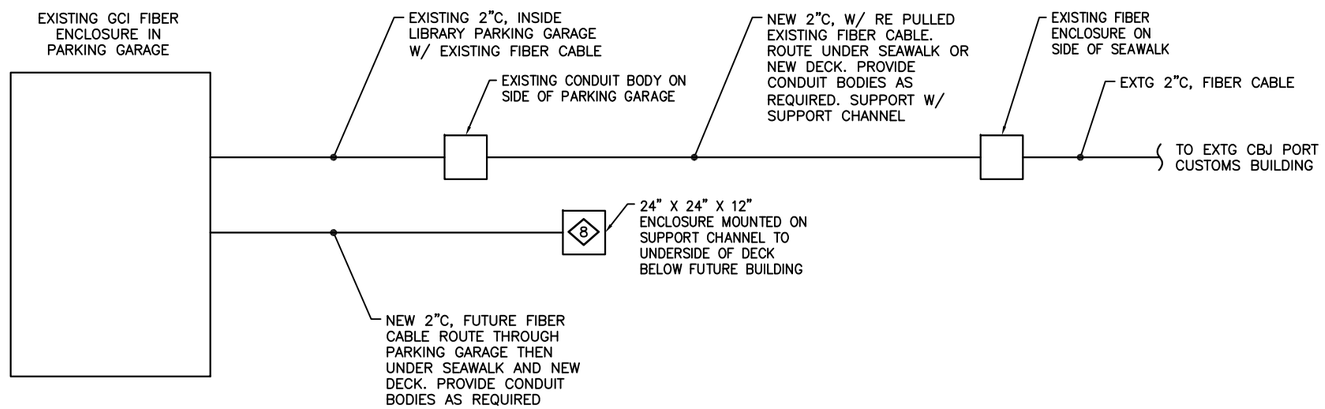

NOTES:

1. COORDINATE WITH GCI AND CBJ MIS TO DISCONNECT AND PULL OUT FIBER CABLE BACK TO EXISTING ENCLOSURE, THEN PULL BACK IN TO RECONNECT IN GCI ENCLOSURE. ARRANGE WITH GCI TO ALLOW CBJ TO USE SEVERAL STRANDS TO SET UP A CONNECTION TO THE FUTURE BUILDING.
2. SEE EQUIPMENT SCHEDULE, SHEET E2.02 FOR # EQUIPMENT NUMBERS.

1 FIBER CABLE RISER DIAGRAM DIAGRAM

NOT TO SCALE

CITY & BOROUGH OF JUNEAU — DOCKS & HARBORS

MORRIS ENGINEERING GROUP INC
2375 Jordan Avenue #7, Juneau, AK 99801
Phone: 907-789-3350, License: AECL1010

REVISIONS

REV.	DATE	DESCRIPTION	DWN.	CKD.	APP.

PND ENGINEERS, INC.
9360 Glacier Highway Ste 100
Juneau, Alaska 99801
Phone: 907-586-2093
Fax: 907-586-2099
www.pndengineers.com

DESIGN: MGM CHECKED: MGM
DRAWN: JRW APPROVED: MGM
SCALE: NTS

STATE OF ALASKA 49TH
Mark G. Morris
May 23, 2019
No. EE 8613
REGISTERED PROFESSIONAL ENGINEER
DATE: 5/23/2019

DOWNTOWN WATERFRONT IMPROVEMENTS PHASE I
CBJ CONTRACT NO. DH19-014

SHEET TITLE:
FIBER CABLE RISER DIAGRAM

PND PROJECT NO.: 182045 C.A.N. NO.: AECC250

E4.01

NOTES:

1. SEE EQUIPMENT SCHEDULE, SHEET E2.02 FOR ◇# EQUIPMENT NUMBERS.

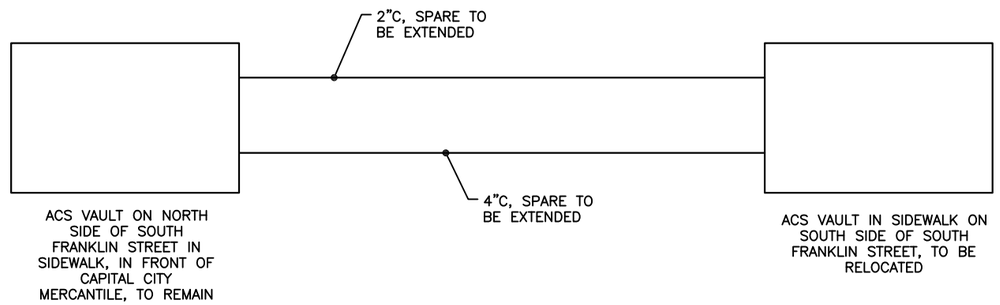

1 EXISTING ACS TELEPHONE RISER DIAGRAM

NOT TO SCALE

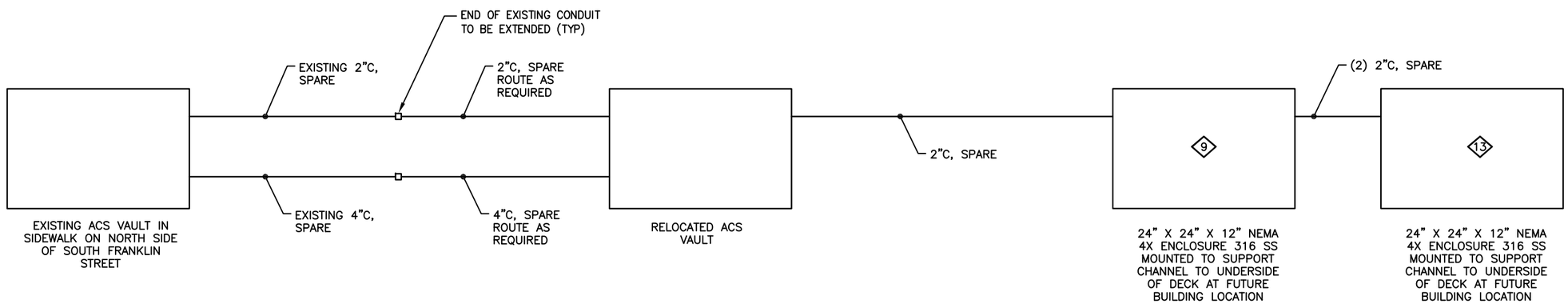

2 NEW ACS TELEPHONE RISER DIAGRAM

NOT TO SCALE

CITY & BOROUGH OF JUNEAU — DOCKS & HARBORS

MORRIS ENGINEERING GROUP INC
2375 Jordan Avenue #7, Juneau, AK 99801
Phone: 907-789-3350, License: AECL1010

REVISIONS

REV.	DATE	DESCRIPTION	DWN.	CKD.	APP.

PND ENGINEERS, INC.
9360 Glacier Highway Ste 100
Juneau, Alaska 99801
Phone: 907-586-2093
Fax: 907-586-2099
www.pndengineers.com

DESIGN: MGM CHECKED: MGM
DRAWN: JRW APPROVED: MGM
SCALE: NTS

STATE OF ALASKA 49TH — Mark G. Morris — May 23, 2019 — No. EE 8613 — REGISTERED PROFESSIONAL ENGINEER
DATE: 5/23/2019

DOWNTOWN WATERFRONT IMPROVEMENTS PHASE I
CBJ CONTRACT NO. DH19-014

SHEET TITLE:
EXISTING & NEW ACS RISER DIAGRAM

PND PROJECT NO.: 182045 C.A.N. NO.: AECC250

E4.02

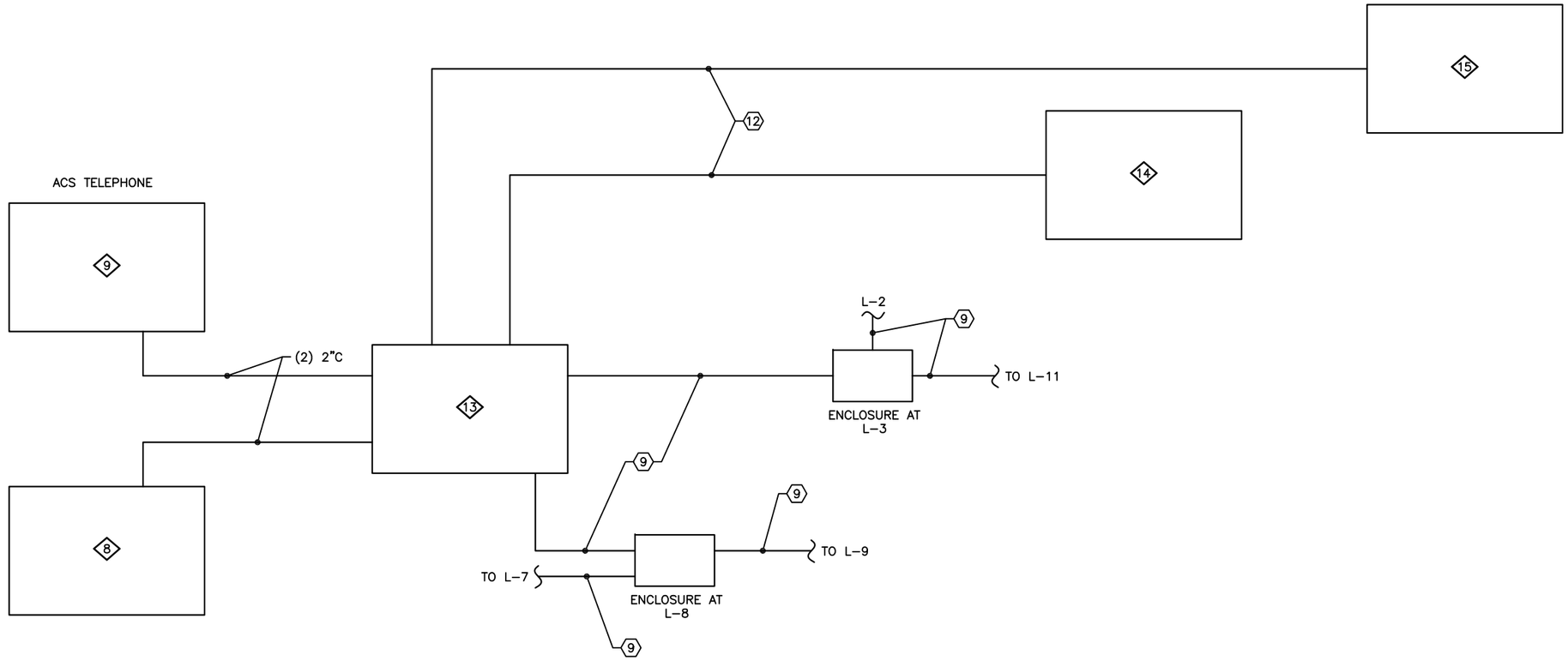

1 SCHEMATIC FOR CAMERAS
NOT TO SCALE

NOTES:

1. CAMERAS TO BE INSTALLED IN FUTURE. CONDUIT, ENCLOSURES, ETC. TO BE INSTALLED IN THIS PROJECT.
2. SEE SHEET E1.02 FOR KEY NOTES.
3. SEE EQUIPMENT SCHEDULE, SHEET E2.02 FOR # EQUIPMENT NUMBERS.

CITY & BOROUGH OF JUNEAU DOCKS & HARBORS

MORRIS ENGINEERING GROUP INC
2375 Jordan Avenue #7, Juneau, AK 99801
Phone: 907-789-3350, License: AECL1010

REVISIONS

REV.	DATE	DESCRIPTION	DWN.	CKD.	APP.

PND ENGINEERS, INC.
9360 Glacier Highway Ste 100
Juneau, Alaska 99801
Phone: 907-586-2093
Fax: 907-586-2099
www.pndengineers.com

DESIGN: MGM CHECKED: MGM
DRAWN: JRW APPROVED: MGM
SCALE:

STATE OF ALASKA 49TH
Mark G. Morris
May 23, 2019
No. EE 8613
REGISTERED PROFESSIONAL ENGINEER
DATE: 5/23/2019

DOWNTOWN WATERFRONT IMPROVEMENTS PHASE I
CBJ CONTRACT NO. DH19-014

SHEET TITLE:
CAMERA SCHEMATIC

PND PROJECT NO.: 182045 C.A.N. NO.: AECC250

E4.03