STATTER HARBOR IMPROVEMENTS PHASE III (D)
UPLAND IMPROVEMENTS

CBJ CONTRACT NO. DH25-023

Volume 2 of 2

PLANS

MARCH 24, 2025

CITY & BOROUGH OF JUNEAU - DOCKS & HARBORS

STATTER HARBOR IMPROVEMENTS PHASE III (D)

UPLAND IMPROVEMENTS

CBJ CONTRACT - DH25-023

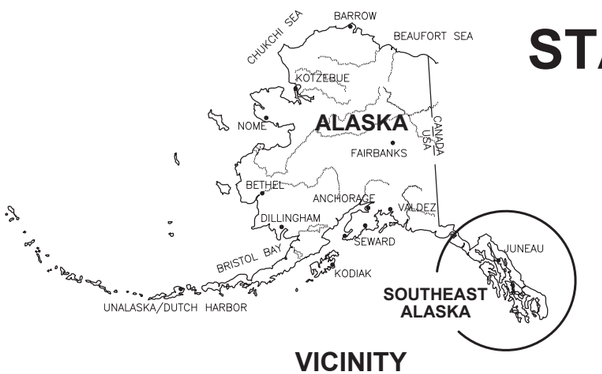

VICINITY

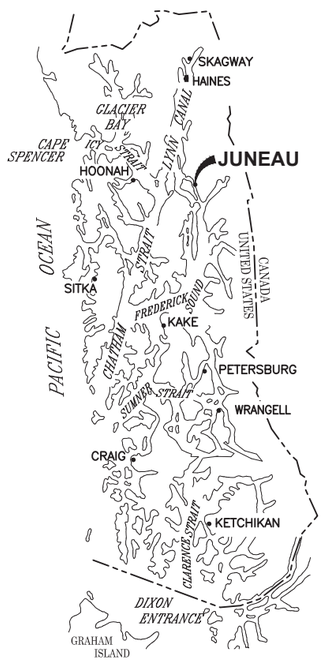

SOUTHEAST ALASKA

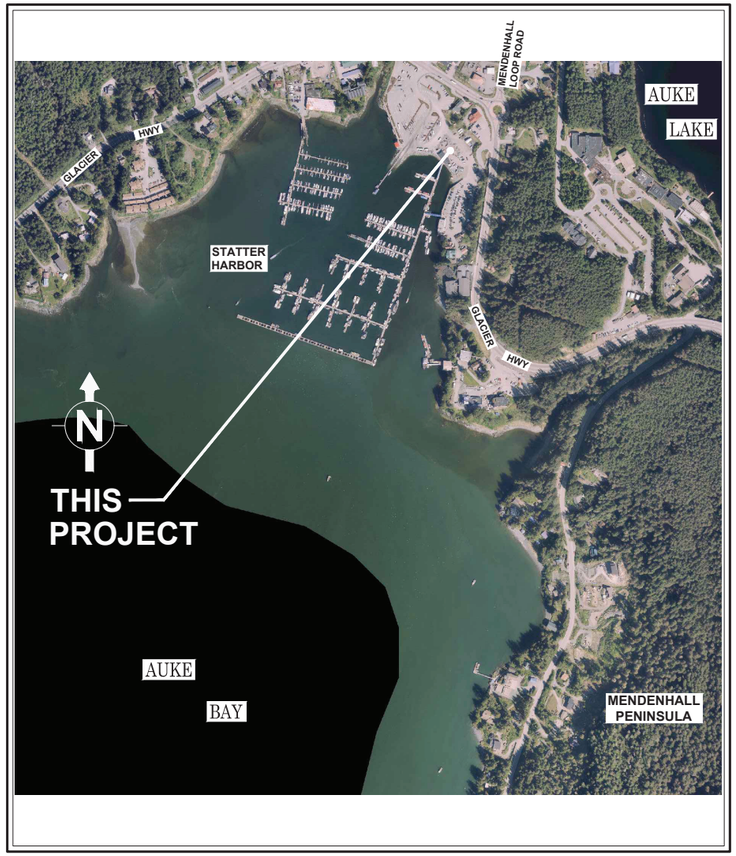

AERIAL PHOTO FROM:
CITY AND BOROUGH OF JUNEAU, 2023

VICINITY MAP

TIDAL DATA

SOURCE: NOAA NOS/CO-OPS STATION ID: 9452210 JUNEAU, ALASKA 2/6/18

DESCRIPTION	ELEV. (FT.)
HIGHEST OBSERVED WATER LEVEL	+24.58
MEAN HIGHER HIGH WATER (MHHW)	+16.30
MEAN HIGH WATER (MHW)	+15.34
MEAN SEA LEVEL (MSL)	+8.58
MEAN TIDE LEVEL (MTL)	+8.47
MEAN LOW WATER (MLW)	+1.60
MEAN LOWER LOW WATER (MLLW)	0.00
LOWEST OBSERVED WATER LEVEL	−6.12

DRAWING INDEX

DWG. NO.	TITLE
	GENERAL
1.01	TITLE SHEET AND VICINITY MAP
1.02	LEGEND, ABBREVIATIONS, GENERAL NOTES AND SURVEY CONTROL
1.03	EXISTING CONDITIONS AND DEMOLITION PLAN
1.04	CONSTRUCTION SEQUENCING AND OWNER / CONTRACTOR USE OF SITE
1.05	OVERALL SITE PLAN
1.06	PARTIAL GRADING PLAN
1.07	PARTIAL GRADING PLAN
1.08	GRADING ENLARGEMENT DETAILS
1.09	GRADING POINTS AND LAYOUT TABLES
1.10	STORM DRAIN PLAN
2.01	SITE SECTIONS
2.02	KAYAK LAUNCH RAMP PLAN AND PROFILE
2.03	RAILING ELEVATION
2.04	RAILING DETAILS
2.05	RAILING DETAILS
2.06	SITE DETAILS
2.07	SITE DETAILS
2.08	SITE DETAILS
3.01	STRIPING PLAN
3.02	STRIPING AND SIGNAGE DETAILS
	ELECTRICAL
E001	SCHEDULE AND SYMBOLS
ES100	ELECTRICAL SITE PLAN
E501	DETAILS
E503	FLOOR PLAN – POWER
	LANDSCAPE
L101	LAYOUT AND SOILS PLAN
L102	LANDSCAPE PLAN
L501	DETAILS

PND ENGINEERS, INC. (PND) IS NOT RESPONSIBLE FOR SAFETY PROGRAMS, METHODS OR PROCEDURES OF OPERATION, OR THE CONSTRUCTION OF THE DESIGN SHOWN ON THESE DRAWINGS. DRAWINGS ARE FOR THE USE OF THIS PROJECT ONLY AND ARE NOT INTENDED FOR REUSE WITHOUT WRITTEN APPROVAL FROM PND. DRAWINGS ARE ALSO NOT TO BE USED IN ANY MANNER THAT WOULD CONSTITUTE A DETRIMENT DIRECTLY OR INDIRECTLY TO PND.

REVISIONS

REV.	DATE	DESCRIPTION	DWN.	CKD.	APP.

PND ENGINEERS, INC.
9360 Glacier Highway Ste 100
Juneau, Alaska 99801
Phone: 907-586-2093
Fax: 907-586-2099
www.pndengineers.com

DESIGN: BMI CHECKED: CRS
DRAWN: WRB APPROVED: CRS
SCALE: AS SHOWN

STATE OF ALASKA 49TH Charles R. Somerville CE-8845 REGISTERED PROFESSIONAL ENGINEER
DATE: 03/24/2025

CITY & BOROUGH OF JUNEAU, ALASKA
STATTER HARBOR IMPROVEMENTS PH III(D)
CBJ CONTRACT NO. DH25-023

SHEET TITLE: **TITLE SHEET AND VICINITY MAP**

1.01

PND PROJECT NO.: 182069 C.A.N. NO.: AECC250

LEGEND

EXISTING	THIS PROJECT	
T		TELEPHONE PEDESTAL
V		TELEVISION PEDESTAL
E		ELECTRICAL PEDESTAL
—x—x—		FENCE
FU A		FUEL LINE (ABANDONED)
FO U X		FUEL LINE
E A		ELECTRICAL (ABANDONED)
Eux		ELECTRICAL (UNDERGROUND)
OHEx		ELECTRICAL (OVERHEAD)
W X		WATER
SS X		SANITARY SEWER
ROW		RIGHT-OF-WAY
Cu X		COMMUNICATION (CABLE/TEL)
SD X		STORM DRAIN
FM X		FORCE MAIN
FDx		FOUNDATION DRAIN PIPE
		PROPERTY LINE
		GUY WIRE ANCHOR
		GUARDRAIL
		BOLLARD
		CURB & GUTTER
H		ELECTRICAL HANDHOLE
		FIRE HYDRANT
	5	LAYOUT POINT
		LIGHT POLE
SSMH		SANITARY SEWER MANHOLE
SDMH		STORM DRAIN MANHOLE
		STORM DRAIN INLET
UP		UTILITY POLE
		SIGN
		WATER VALVE
		SURFACE FLOW DIRECTION
(xx.xx)		EXISTING ELEVATION
	15	RADIUS IN FEET
	1	CURB TYPE
		DIRECTION OF RAMP SLOPE SYMBOL MAX. SLOPE 8.33% (1:12)

A / 1.02 — SECTION OR DETAIL CALLOUT; LOCATION OF DETAIL OR REFERENCE DRAWING

GENERAL NOTES

1. PROPERTY DISTURBED DURING CONSTRUCTION SHALL BE RESTORED TO ITS PRE-CONSTRUCTION CONDITION OR BETTER AT NO ADDITIONAL COST.
2. CBJ ENGINEERING STANDARD DETAILS BOOK DATED AUGUST, 2011 IS MADE A PART OF THIS CONTRACT, WITH CURRENT REVISIONS AS APPLICABLE. STANDARD DETAILS SHALL ONLY BE UTILIZED AS SPECIFICALLY REFERENCED IN THE DRAWINGS WITH MODIFICATIONS SPECIFIED.
3. THE CONTRACTOR SHALL BE RESPONSIBLE FOR ADHERING TO ALL APPLICABLE, LOCAL, STATE AND FEDERAL CODES, PERMITS AND SAFETY REQUIREMENTS.
4. THE LOCATIONS OF EXISTING FEATURES AND UTILITIES SHOWN ON THE DRAWINGS ARE APPROXIMATE. ADDITIONAL UTILITIES NOT SHOWN IN THESE DRAWINGS MAY BE PRESENT. THE CONTRACTOR SHALL VERIFY ALL UTILITY LOCATIONS IN THE FIELD AS NECESSARY, PRIOR TO BEGINNING WORK. THE HORIZONTAL AND VERTICAL LOCATIONS OF ALL UTILITIES ENCOUNTERED IN THE FIELD SHALL BE RECORDED ON THE CONTRACTOR'S RECORD DRAWINGS. CONTACT LOCAL UTILITY COMPANIES PRIOR TO ANY/ ALL EXCAVATIONS AT THE FOLLOWING TELEPHONE NUMBERS:

DIAL BEFORE YOU DIG!
586-1333
UNDERGROUND POWER, TELEPHONE, T.V., COMMUNICATIONS, WATER AND WASTEWATER LINES ARE IN THE AREA. UTILITIES SHOWN HERE DO NOT SUBSTITUTE FOR FIELD LOCATES.

5. GRADING AND FINAL ALIGNMENT OF UTILITIES & PIPING ARE SUBJECT TO MINOR REVISIONS BY THE ENGINEER TO FIT SITE CONDITIONS, AT NO ADDITIONAL COST.
6. CONTRACTOR SHALL COORDINATE WITH ALL AFFECTED BOROUGH DEPARTMENTS AND LOCAL UTILITY COMPANIES DURING CONSTRUCTION.
7. THE CONTRACTOR SHALL NOT DISRUPT UTILITY SERVICES EXCEPT AS REQUIRED TO COMPLETE THE RECONFIGURATION OF THOSE SERVICES AS SHOWN IN THE PLANS. COORDINATE ANY DISRUPTIONS WITH OWNER A MINIMUM OF 48 HOURS IN ADVANCE.

ABBREVIATIONS

A	
@	AT
ACP	ASPHALT CONCRETE PAVEMENT
APPROX.	APPROXIMATE
B	
BLDG	BUILDING
BSW	BACK OF SEAWALK
BTM,BOT	BOTTOM
BTWN	BETWEEN
C	
C&G	CURB & GUTTER
CB	CATCH BASIN
CIP	CAST-IN-PLACE
℄	CENTER LINE
CLR	CLEAR
CMP	CORRUGATED METAL PIPE
CO	CLEANOUT
CONC	CONCRETE
CMU	CONCRETE MASONRY UNIT
CPP	CORRUGATED POLYETHYLENE PIPE
COR	CORNER
CTE	CONNECT TO EXISTING
CTR	CENTER
CY	CUBIC YARD
D	
D/DIA	DIAMETER
DIP	DUCTILE IRON PIPE
DTL	DETAIL
E	
E	EAST
EA.	EACH
EL/ELEV	ELEVATION
EQ	EQUAL
EW	EACH WAY
(E)/EXIST	EXISTING
(xx.xx)	EXISTING ELEVATION
F	
FD	FLOOR DRAIN
FF	FINISHED FLOOR
FH	FIRE HYDRANT, FLAT HEAD
FM	FORCE MAIN SEWER
FT	FOOT
I	
G	
GB	GRADE BREAK
GTD	GRADE TO DRAIN
GV	GATE VALVE
H	
HDG	HOT-DIPPED GALVANIZED
HWY.	HIGHWAY
ID	INSIDE DIAMETER
IE	INVERT ELEVATION
INV	INVERT
J	
JB	JUNCTION BOX
K	
K	RATE OF CURVATURE
L	
LF	LINEAR FEET
LONG	LONGITUDINALLY
M	
MAX	MAXIMUM
MH	MANHOLE
MIN	MINIMUM
MLLW	MEAN LOWER LOW WATER
MSE	MECHANICALLY STABILIZED EARTH
MTL	MATERIAL (S)
N	
N	NORTH
NFS	NON FROST SUSCEPTIBLE
NTS	NOT TO SCALE
O	
OC	ON CENTER
OD	OUTSIDE DIAMETER
OHE	OVERHEAD ELECTRICAL
Q	
QTY	QUANTITY
R	
R/RAD	RADIUS
RE	RIM ELEVATION
REQD	REQUIRED
REQMTS	REQUIREMENTS
ROW	RIGHT OF WAY
S	
S	SOUTH
SD	STORM DRAIN
SDI	STORM DRAIN INLET STRUCTURE
SDO	STORM DRAIN OUTLET STRUCTURE
SDR	STANDARD DIMENSION RATIO
SF	SQUARE FOOT
SHT	SHEET
SPEC	SPECIFICATION (S)
SS	STAINLESS STEEL, SANITARY SEWER
SDMH	STORM DRAIN MANHOLE
SSMH	SANITARY SEWER MANHOLE
STA	STATION
STD	STANDARD
SWR	SEWER
SY	SQUARE YARD
SYMM	SYMMETRICAL
T	
T&B	TOP AND BOTTOM
t.	THICK
TD	TRENCH DRAIN
TYP	TYPICAL
U	
UE	UNDERGROUND ELECTRIC
V	
VB	VALVE BOX
W	
W	WEST
w/	WITH
WL	WATERLINE
WV	WATER VALVE

SURVEY CONTROL

SURVEY CONTROL				
POINT #	NORTHING	EASTING	ELEV. (FT)	DESCRIPTION
42	510492.220	485365.881	24.67	PK NAIL W/FLASHER
416	510963.679	484704.175	—	B.C. MONUMENT
523	511109.967	485541.616	58.51	AKDOT AL. CAP

SURVEY NOTES

1. VERTICAL DATUM IS MEAN LOWER LOW WATER (MLLW = 0.00').
2. BASIS OF VERTICAL DATUM FOR THIS PROJECT IS CONTROL POINT 523 WITH A MEAN LOWER LOW WATER ELEVATION OF 58.51 FEET.
3. THE HORIZONTAL CONTROL FOR THIS PROJECT IS BASED ON THE DOT/PF 2000 JUNEAU GRID. THE DOT/PF JUNEAU GRID IS A LOCAL GROUND SYSTEM BASED AT USC&GS FIRST ORDER CONTROL STATION "EDDIE". IT RELATES TO AKSPC ZONE 1 NAD83 THROUGH THE FOLLOWING PARAMETERS:

   ZONE = NAD83 AKSPC ZONE 1
   GRID SCALE = 0.999928875
   CONVERGENCE = -0°45'27.26"
   TRANSLATION ABOUT USC&GS POINT

   AS FOLLOWS:

   AKSPC NORTHING = 2383469.17310 FT US
   AKSPC EASTING = 2512570.06318 FT US
   LOCAL NORTHING = 500000.0000 FT US
   LOCAL EASTING = 500000.0000 FT US

4. FIELD SURVEYS PERFORMED IN 2016 AND 2021 BY PND & OTHERS.
5. PROPERTY LINES AND EASEMENTS ARE DERIVED FROM RECORD PLATS.
6. BATHYMETRIC SURVEY PERFORMED BY PND IN 2016.

SURVEY CONTROL

REVISIONS

REV.	DATE	DESCRIPTION	DWN.	CKD.	APP.

PND ENGINEERS, INC.
9360 Glacier Highway Ste 100
Juneau, Alaska 99801
Phone: 907-586-2093
Fax: 907-586-2099
www.pndengineers.com

DESIGN: BMI CHECKED: CRS
DRAWN: WRB APPROVED: CRS
SCALE: AS SHOWN

STATE OF ALASKA 49TH Charles R. Somerville CE-8845 REGISTERED PROFESSIONAL ENGINEER
DATE: 03/24/2025

CITY & BOROUGH OF JUNEAU, ALASKA
STATTER HARBOR IMPROVEMENTS PH III(D)
CBJ CONTRACT NO. DH25-023

SHEET TITLE: **LEGEND, ABBREVIATIONS, GENERAL NOTES AND SURVEY CONTROL**

1.02

PND PROJECT NO.: 182069 C.A.N. NO.: AECC250

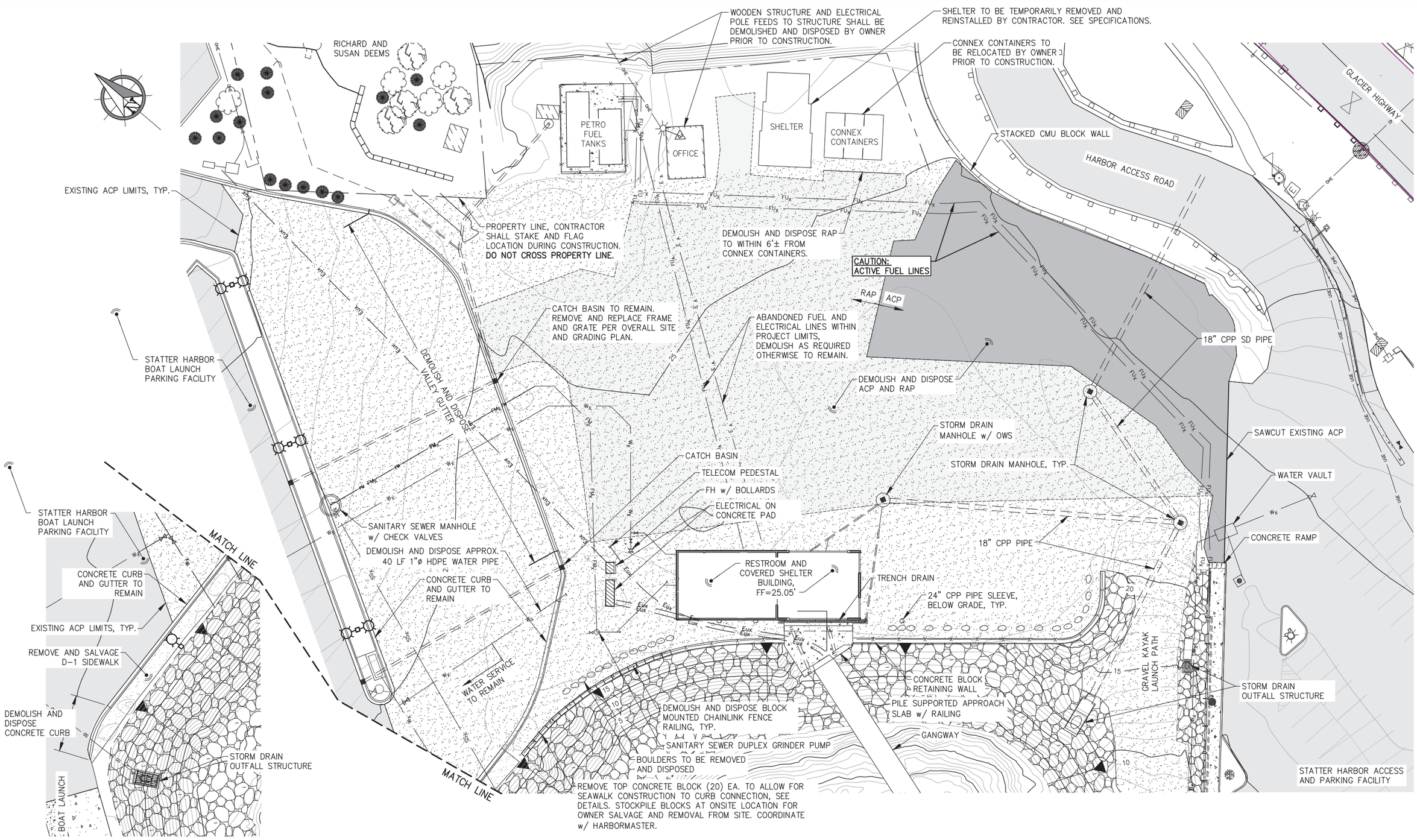

REVISIONS

REV.	DATE	DESCRIPTION	DWN.	CKD.	APP.

PND ENGINEERS, INC.
9360 Glacier Highway Ste 100
Juneau, Alaska 99801
Phone: 907-586-2093
Fax: 907-586-2099
www.pndengineers.com

DESIGN: BMI CHECKED: CRS
DRAWN: WRB APPROVED: CRS
SCALE: SCALE IN FEET 0 20 40 FT.

STATE OF ALASKA 49TH Charles R. Somerville CE-8845 REGISTERED PROFESSIONAL ENGINEER
DATE: 03/24/2025

CITY & BOROUGH OF JUNEAU, ALASKA
STATTER HARBOR IMPROVEMENTS PH III(D)
CBJ CONTRACT NO. DH25-023

SHEET TITLE:
EXISTING CONDITIONS AND DEMOLITION PLAN

1.03

PND PROJECT NO.: 182069 C.A.N. NO.: AECC250

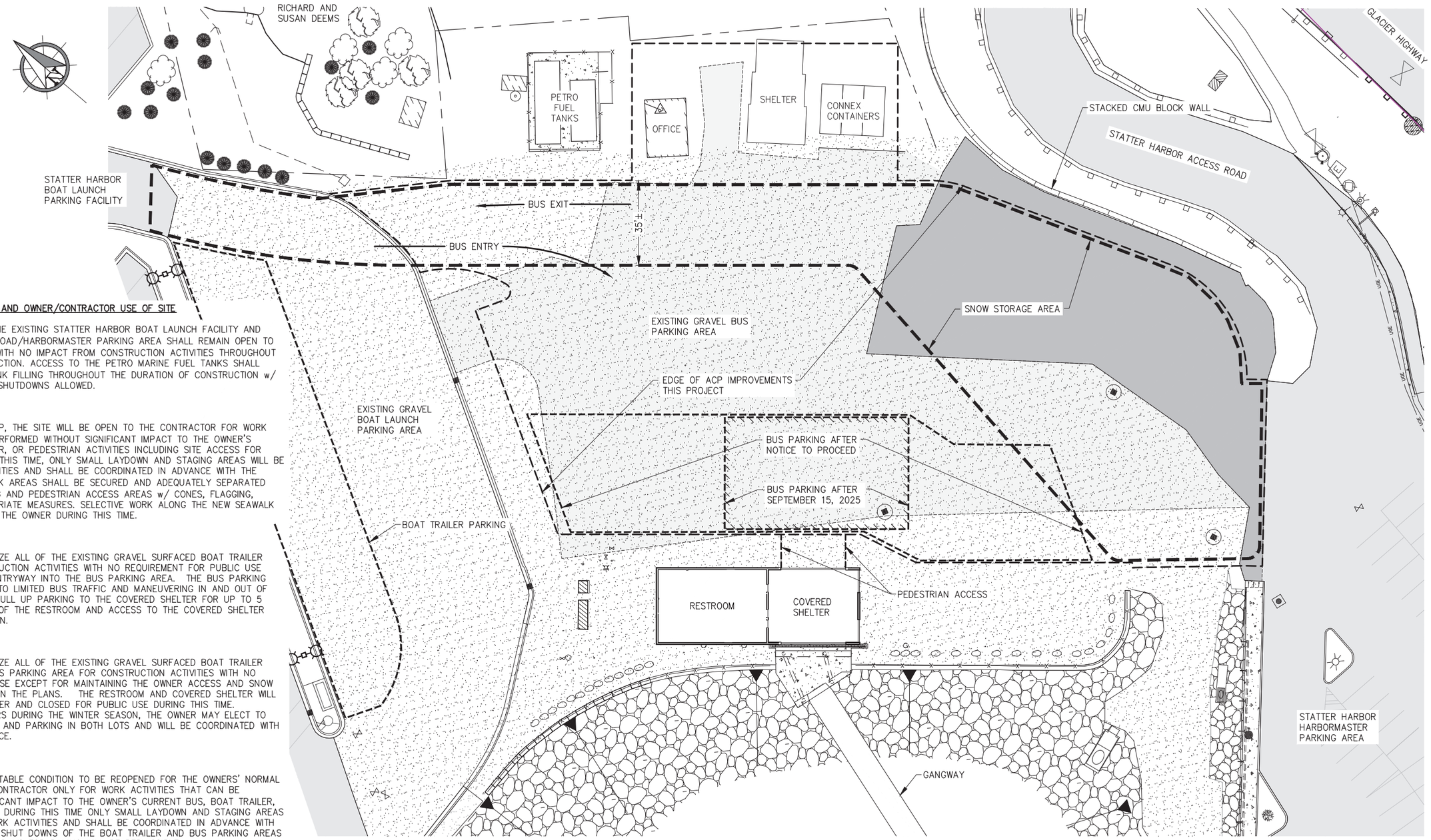

CONSTRUCTION SEQUENCING AND OWNER/CONTRACTOR USE OF SITE

THE PAVED PORTIONS OF THE EXISTING STATTER HARBOR BOAT LAUNCH FACILITY AND STATTER HARBOR ACCESS ROAD/HARBORMASTER PARKING AREA SHALL REMAIN OPEN TO THE OWNER'S OPERATIONS WITH NO IMPACT FROM CONSTRUCTION ACTIVITIES THROUGHOUT THE DURATION OF CONSTRUCTION. ACCESS TO THE PETRO MARINE FUEL TANKS SHALL REMAIN OPEN FOR FUEL TANK FILLING THROUGHOUT THE DURATION OF CONSTRUCTION w/ ONLY SHORT COORDINATED SHUTDOWNS ALLOWED.

AFTER NTP:

FOLLOWING ISSUANCE OF NTP, THE SITE WILL BE OPEN TO THE CONTRACTOR FOR WORK ACTIVITIES THAT CAN BE PERFORMED WITHOUT SIGNIFICANT IMPACT TO THE OWNER'S CURRENT BUS, BOAT TRAILER, OR PEDESTRIAN ACTIVITIES INCLUDING SITE ACCESS FOR THOSE ACTIVITIES. DURING THIS TIME, ONLY SMALL LAYDOWN AND STAGING AREAS WILL BE AVAILABLE FOR WORK ACTIVITIES AND SHALL BE COORDINATED IN ADVANCE WITH THE OWNER. CONTRACTOR'S WORK AREAS SHALL BE SECURED AND ADEQUATELY SEPARATED FROM BUS/TRAILER PARKING AND PEDESTRIAN ACCESS AREAS w/ CONES, FLAGGING, FENCING OR OTHER APPROPRIATE MEASURES. SELECTIVE WORK ALONG THE NEW SEAWALK CAN BE COORDINATED WITH THE OWNER DURING THIS TIME.

AFTER SEPT. 15, 2025:

THE CONTRACTOR MAY UTILIZE ALL OF THE EXISTING GRAVEL SURFACED BOAT TRAILER PARKING AREA FOR CONSTRUCTION ACTIVITIES WITH NO REQUIREMENT FOR PUBLIC USE EXCEPT FOR MAINTAINING ENTRYWAY INTO THE BUS PARKING AREA. THE BUS PARKING AREA SHALL REMAIN OPEN TO LIMITED BUS TRAFFIC AND MANEUVERING IN AND OUT OF THE FACILITY AS WELL AS PULL UP PARKING TO THE COVERED SHELTER FOR UP TO 5 BUSSES. PEDESTRIAN USE OF THE RESTROOM AND ACCESS TO THE COVERED SHELTER AND GANGWAY SHALL REMAIN.

AFTER OCT. 15, 2025:

THE CONTRACTOR MAY UTILIZE ALL OF THE EXISTING GRAVEL SURFACED BOAT TRAILER PARKING AREA AND THE BUS PARKING AREA FOR CONSTRUCTION ACTIVITIES WITH NO REQUIREMENT FOR PUBLIC USE EXCEPT FOR MAINTAINING THE OWNER ACCESS AND SNOW STORAGE AREA IDENTIFIED ON THE PLANS. THE RESTROOM AND COVERED SHELTER WILL BE WINTERIZED BY THE OWNER AND CLOSED FOR PUBLIC USE DURING THIS TIME.
IF NO CONSTRUCTION OCCURS DURING THE WINTER SEASON, THE OWNER MAY ELECT TO MAINTAIN GANGWAY ACCESS AND PARKING IN BOTH LOTS AND WILL BE COORDINATED WITH THE CONTRACTOR IN ADVANCE.

AFTER APRIL 27, 2026:

THE SITE WILL BE IN ACCEPTABLE CONDITION TO BE REOPENED FOR THE OWNERS' NORMAL OPERATIONS AND TO THE CONTRACTOR ONLY FOR WORK ACTIVITIES THAT CAN BE PERFORMED WITHOUT SIGNIFICANT IMPACT TO THE OWNER'S CURRENT BUS, BOAT TRAILER, OR PEDESTRIAN ACTIVITIES. DURING THIS TIME ONLY SMALL LAYDOWN AND STAGING AREAS WILL BE AVAILABLE FOR WORK ACTIVITIES AND SHALL BE COORDINATED IN ADVANCE WITH THE OWNER. COORDINATED SHUT DOWNS OF THE BOAT TRAILER AND BUS PARKING AREAS FOR UP TO 4 CONSECUTIVE DAYS FOR PAVING WILL BE PERMISSIBLE.

SUBSTANTIAL COMPLETION: MAY 31, 2026.

CITY & BOROUGH OF JUNEAU
DOCKS & HARBORS

REVISIONS

REV.	DATE	DESCRIPTION	DWN.	CKD.	APP.

PND ENGINEERS, INC.
9360 Glacier Highway Ste 100
Juneau, Alaska 99801
Phone: 907-586-2093
Fax: 907-586-2099
www.pndengineers.com

DESIGN: BMI CHECKED: CRS
DRAWN: WRB APPROVED: CRS
SCALE: SCALE IN FEET 0 20 40 FT.

STATE OF ALASKA 49TH Charles R. Somerville CE-8845 REGISTERED PROFESSIONAL ENGINEER
DATE: 03/24/2025

CITY & BOROUGH OF JUNEAU, ALASKA
STATTER HARBOR IMPROVEMENTS PH III(D)
CBJ CONTRACT NO. DH25-023

SHEET TITLE: **CONSTRUCTION SEQUENCING AND OWNER / CONTRACTOR USE OF SITE**

PND PROJECT NO.: 182069 C.A.N. NO.: AECC250

1.04

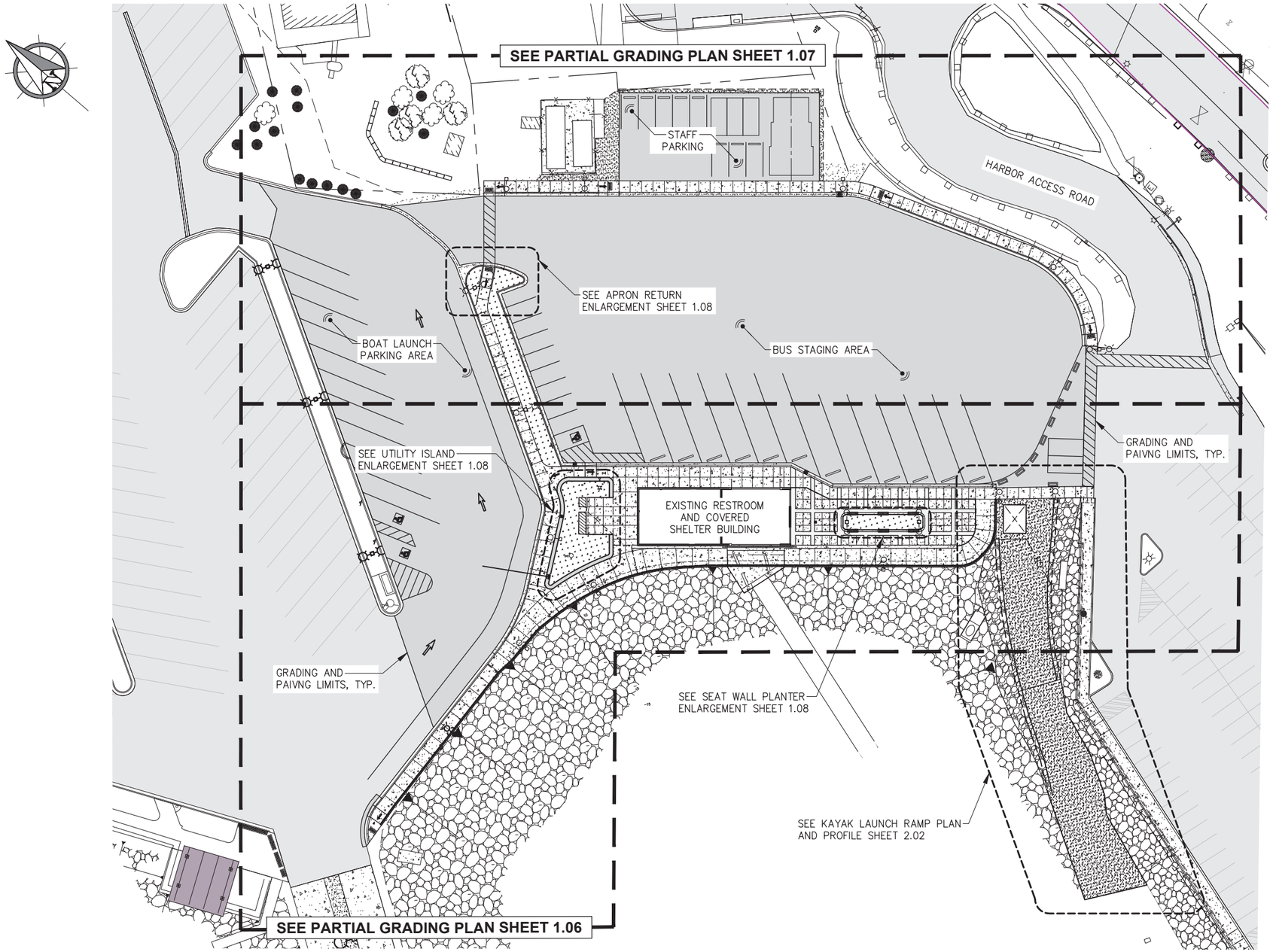

OVERALL SITE PLAN

REVISIONS

REV.	DATE	DESCRIPTION	DWN.	CKD.	APP.

PND ENGINEERS, INC.
9360 Glacier Highway Ste 100
Juneau, Alaska 99801
Phone: 907-586-2093
Fax: 907-586-2099
www.pndengineers.com

DESIGN: BMI CHECKED: CRS
DRAWN: WRB APPROVED: CRS
SCALE: SCALE IN FEET 0 30 60 FT.

STATE OF ALASKA 49TH Charles R. Somerville CE-8845 REGISTERED PROFESSIONAL ENGINEER
DATE: 03/24/2025

CITY & BOROUGH OF JUNEAU, ALASKA
STATTER HARBOR IMPROVEMENTS PH III(D)
CBJ CONTRACT NO. DH25-023

SHEET TITLE: **OVERALL SITE PLAN**

1.05

PND PROJECT NO.: 182069 C.A.N. NO.: AECC250

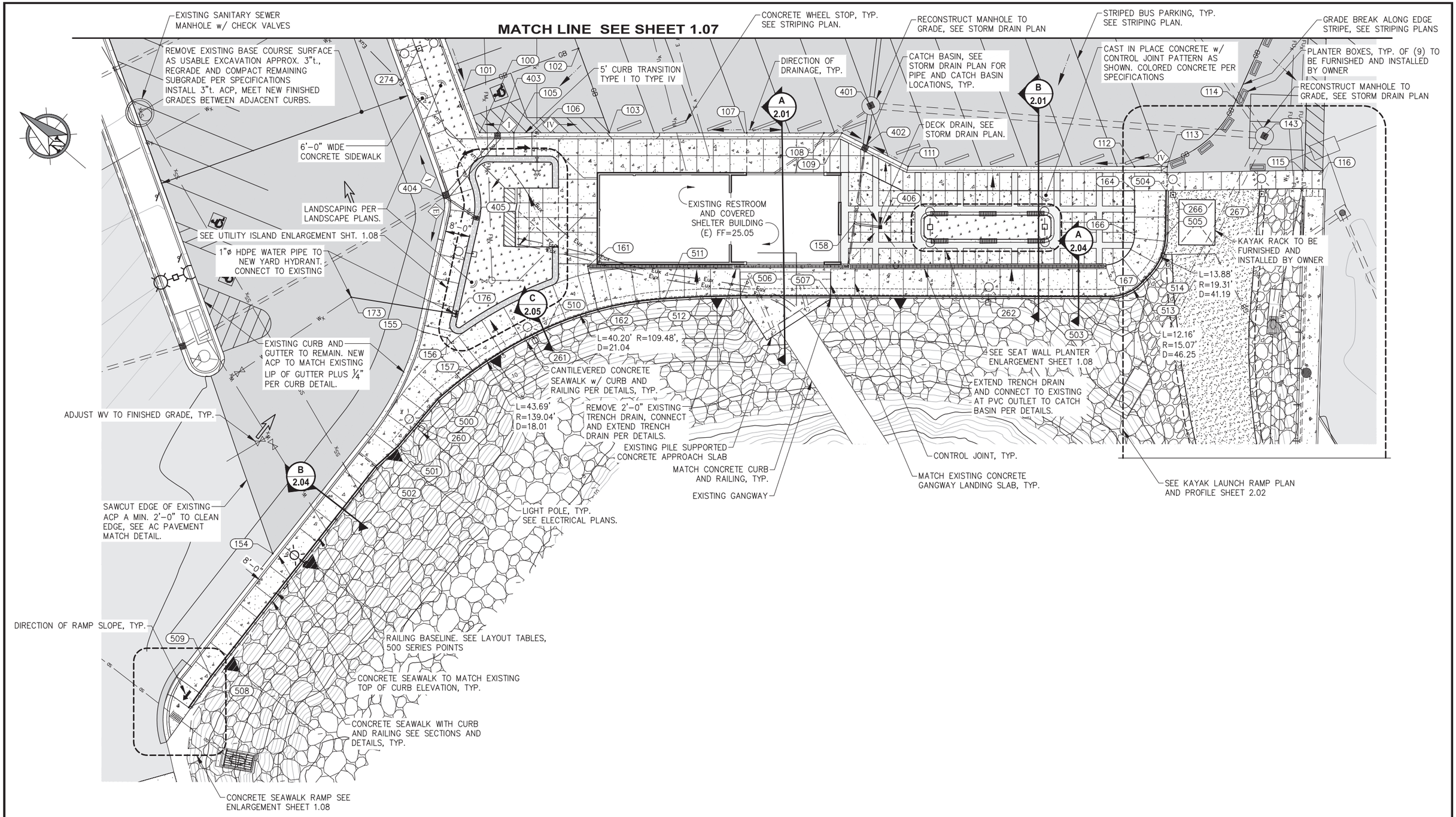

REVISIONS

REV.	DATE	DESCRIPTION	DWN.	CKD.	APP.

PND ENGINEERS, INC.
9360 Glacier Highway Ste 100
Juneau, Alaska 99801
Phone: 907-586-2093
Fax: 907-586-2099
www.pndengineers.com

DESIGN: BMI CHECKED: CRS
DRAWN: WRB APPROVED: CRS
SCALE: SCALE IN FEET 0 15 30 FT.

STATE OF ALASKA 49TH Charles R. Somerville CE-8845 REGISTERED PROFESSIONAL ENGINEER
DATE: 03/24/2025

CITY & BOROUGH OF JUNEAU, ALASKA
STATTER HARBOR IMPROVEMENTS PH III(D)
CBJ CONTRACT NO. DH25-023

SHEET TITLE:
PARTIAL GRADING PLAN

1.06

PND PROJECT NO.: 182069 C.A.N. NO.: AECC250

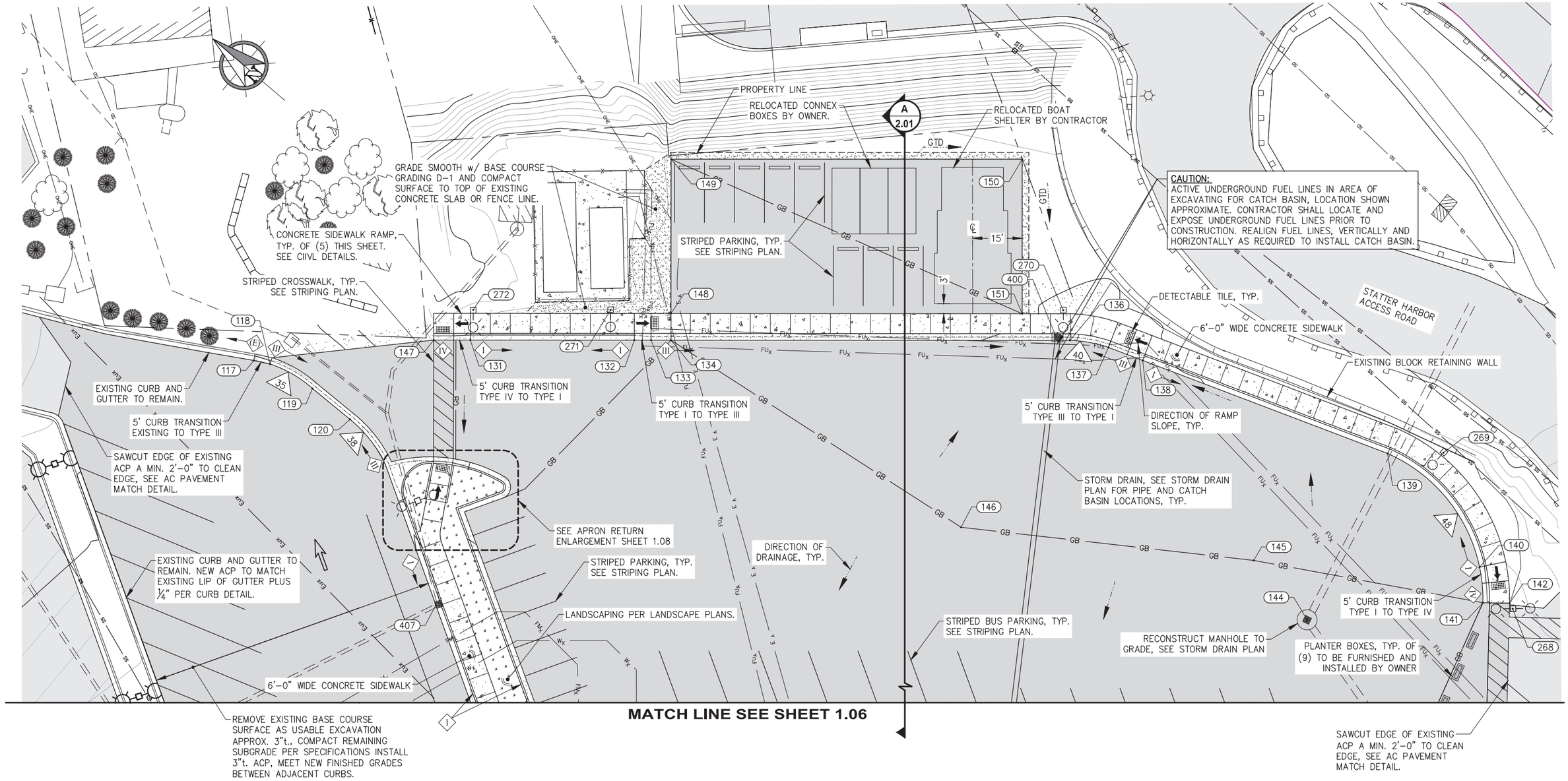

REVISIONS

REV.	DATE	DESCRIPTION	DWN.	CKD.	APP.

P | N | D ENGINEERS, INC.
9360 Glacier Highway Ste 100
Juneau, Alaska 99801
Phone: 907-586-2093
Fax: 907-586-2099
www.pndengineers.com

DESIGN: BMI CHECKED: CRS
DRAWN: WRB APPROVED: CRS
SCALE: SCALE IN FEET 0 15 30 FT.

STATE OF ALASKA 49TH Charles R. Somerville CE-8845 REGISTERED PROFESSIONAL ENGINEER
DATE: 03/24/2025

CITY & BOROUGH OF JUNEAU, ALASKA
STATTER HARBOR IMPROVEMENTS PH III(D)
CBJ CONTRACT NO. DH25-023

SHEET TITLE:
PARTIAL GRADING PLAN

PND PROJECT NO.: 182069 C.A.N. NO.: AECC250

1.07

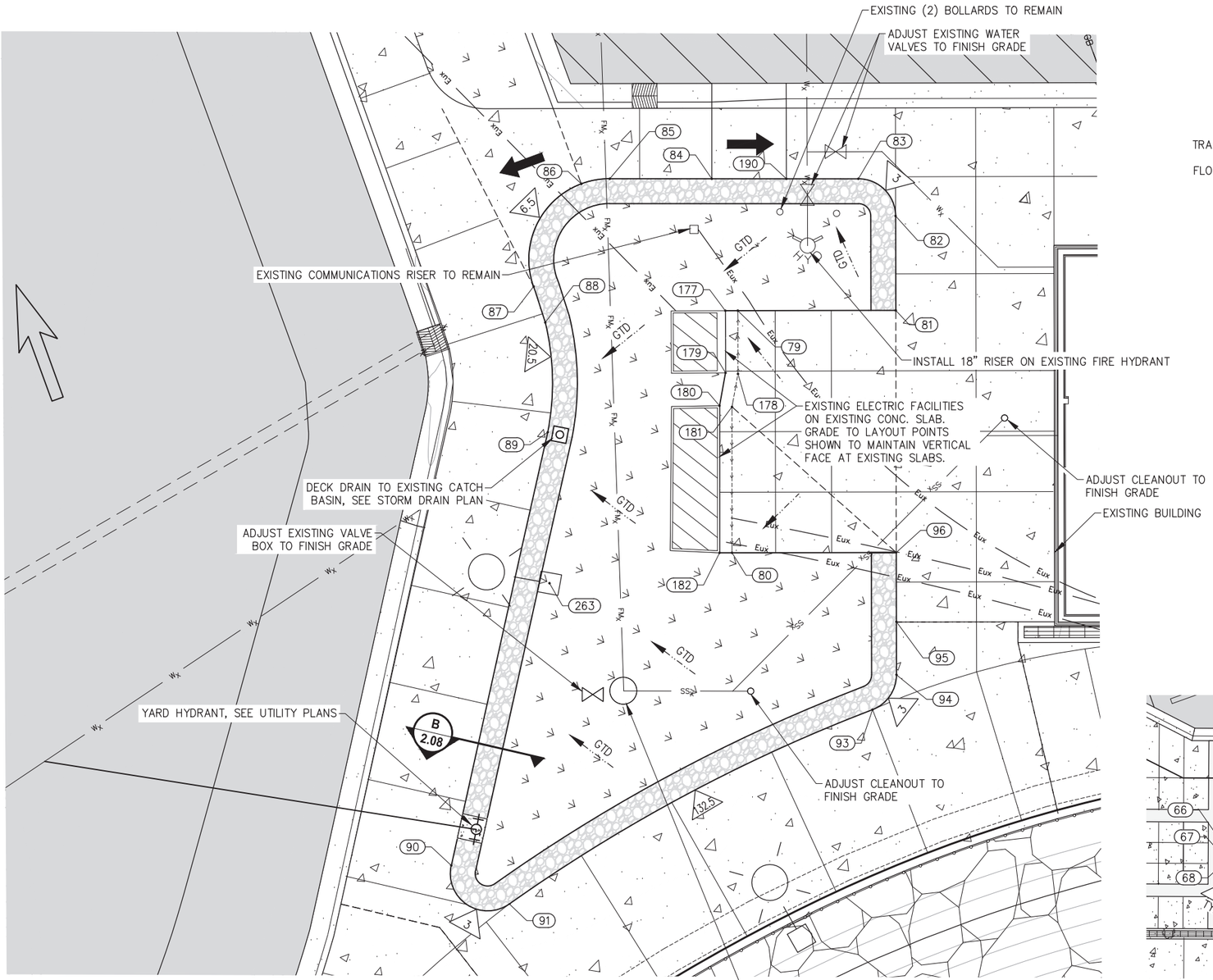

UTILITY ISLAND ENLARGEMENT

SCALE IN FEET
0 5 10 FT.

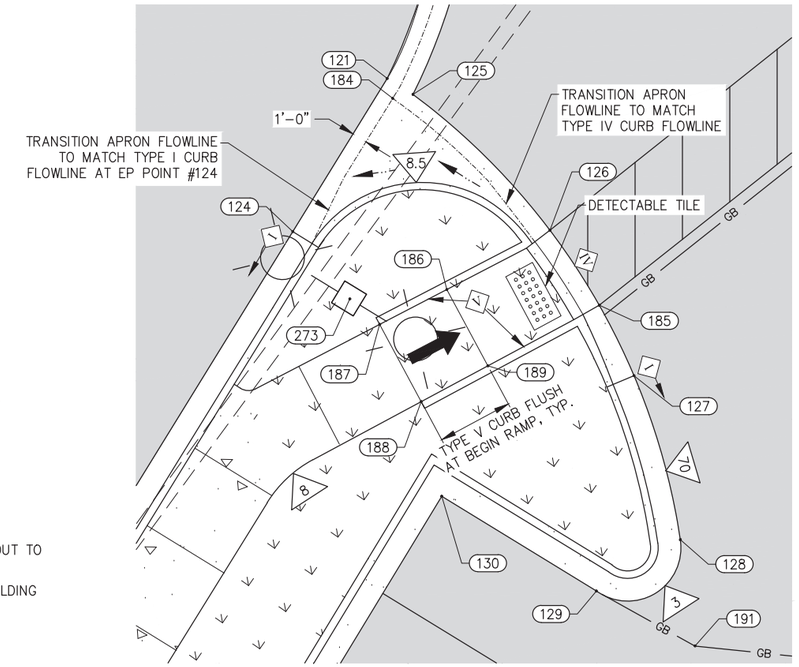

APRON RETURN ENLARGEMENT

SCALE IN FEET
0 5 10 FT.

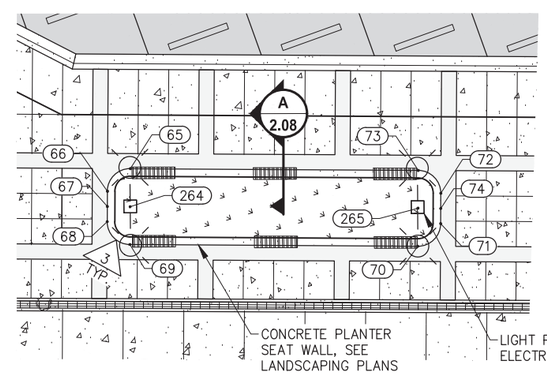

SEAT WALL PLANTER ENLARGEMENT

SCALE IN FEET
0 10 20 FT.

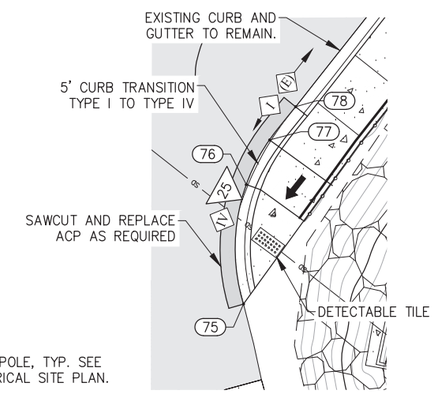

CONCRETE SEAWALK RAMP DETAIL

SCALE IN FEET
0 10 20 FT.

CITY & BOROUGH OF JUNEAU
DOCKS & HARBORS

REVISIONS

REV.	DATE	DESCRIPTION	DWN.	CKD.	APP.

PND ENGINEERS, INC.
9360 Glacier Highway Ste 100
Juneau, Alaska 99801
Phone: 907-586-2093
Fax: 907-586-2099
www.pndengineers.com

DESIGN: BMI CHECKED: CRS
DRAWN: WRB APPROVED: CRS
SCALE: AS SHOWN

STATE OF ALASKA 49TH Charles R. Somerville CE-8845 REGISTERED PROFESSIONAL ENGINEER
DATE: 03/24/2025

CITY & BOROUGH OF JUNEAU, ALASKA
STATTER HARBOR IMPROVEMENTS PH III(D)
CBJ CONTRACT NO. DH25-023

SHEET TITLE:
GRADING ENLARGEMENT DETAILS

1.08

PND PROJECT NO.: 182069 C.A.N. NO.: AECC250

LAYOUT TABLE

POINT NO.	NORTHING	EASTING	ELEVATION	DESCRIPTION
65	510622.76	485329.89	25.17	PT, CONC.
66	510623.24	485325.67	25.12	PT, CONC.
67	510621.99	485324.11	25.12	GB, CONC.
68	510620.74	485322.54	25.12	PT, CONC.
69	510616.53	485322.07	25.12	PC, CONC.
70	510586.80	485345.74	25.14	PT, CONC.
71	510586.32	485349.95	25.14	PC, CONC.
72	510588.81	485353.08	25.14	PT, CONC.
73	510593.03	485353.56	25.12	PC, CONC.
74	510587.57	485351.52	25.14	GB, CONC.
75	510710.97	485035.31	24.77	ME, PC, EP
76	510720.57	485047.81	24.73	EP, BTM RAMP
77	510721.87	485054.31	24.68	EP
78	510721.96	485059.88	24.64	EP, ME
79	510733.79	485251.57	24.12	GB, CONC.
80	510722.05	485236.01	24.12	GB, CONC.
81	510723.84	485259.48	24.57	GB, CONC., <PT
82	510728.57	485265.42	24.50	PC, CONC.
83	510732.78	485265.91	24.43	PT, CONC.
84	510742.02	485258.58	24.78	END RAMP
85	510748.46	485253.48	24.70	PC, EC
86	510749.99	485251.74	24.52	POC, GB, EC, END RAMP
87	510747.87	485242.88	23.76	BEGIN RAMP, PT, GB, EC
88	510745.34	485241.20	23.71	PC, EC
89	510739.69	485234.40	23.58	PT, EC
90	510724.11	485202.27	23.99	PC, EC
91	510718.53	485202.74	24.10	PCC, EC
93	510705.34	485233.15	24.85	PCC, EC
94	510705.58	485236.55	24.85	PT, EC
95	510708.24	485239.89	24.81	GB, EC
96	510711.71	485244.25	24.76	GB, EC, <PT
100	510755.70	485257.65	24.20	EP, <PT
101	510768.50	485265.30	24.34	EP, GB
102	510747.49	485299.76	24.75	EP, GB
103	510722.12	485284.29	24.58	EP, GB
105	510746.80	485264.62	24.21	EP, END TRANS
106	510742.11	485268.35	24.28	EP, BEGIN TRANS
107	510686.50	485312.60	24.94	EP, GB
108	510666.55	485328.48	24.88	EP, GB
109	510661.88	485332.20	24.86	EP, <PT
111	510637.85	485337.17	24.89	EP, <PT
112	510579.23	485383.77	25.12	EP, PT, GB
113	510570.78	485390.49	25.15	EP, END

LAYOUT TABLE

POINT NO.	NORTHING	EASTING	ELEVATION	DESCRIPTION
114	510566.71	485421.96	25.30	EP, GB, PC
115	510535.04	485417.44	24.13	EP, GB, SW
116	510529.67	485421.54	23.99	EP, GB, SW, ME
117	510914.22	485302.69	27.05	EP, ME, BEGIN TRANS
118	510909.77	485304.85	26.88	EP, BEGIN VG, PC
119	510895.24	485307.06	26.56	EP, PT
120	510880.64	485306.86	26.18	EP, PC
121	510864.04	485302.92	25.70	EP, PT, APRON
124	510853.94	485296.70	25.39	EP, APRON, PC
125	510862.99	485304.63	25.70	EP, VG, PC APRON
126	510854.03	485313.67	25.79	EP
127	510844.44	485319.21	25.69	EP, BEGIN TRANS
128	510833.62	485322.27	25.32	EP, PCC
129	510830.24	485316.73	25.22	EP, PT
130	510836.48	485306.52	25.06	EP, <PT
131	510867.25	485347.95	27.34	EP, BEGIN RAMP
132	510828.78	485378.60	26.81	EP, BEGIN RAMP
133	510824.85	485381.73	26.74	EP, BEGIN VG
134	510820.16	485385.43	26.67	EP, GB
136	510726.52	485460.00	25.21	EP, PC
137	510716.19	485465.55	25.25	EP, PT
138	510705.71	485468.90	25.28	EP, BEGIN RAMP
139	510630.87	485492.84	25.51	EP, PC
140	510588.04	485483.37	25.65	EP, BEGIN RAMP
141	510580.60	485475.64	25.68	EP, PT, GB, END CURB
142	510574.25	485480.50	25.06	EP, END SW, ME
143	510551.94	485418.51	24.73	RE
144	510618.65	485438.75	26.25	RE
145	510642.27	485442.73	26.67	GB
146	510717.12	485395.78	26.41	GB
147	510875.86	485341.09	27.33	EP, <PT, END
148	510825.17	485391.72	26.75	EP, BW
149	510853.97	485427.94	26.72	EP, <PT
150	510771.63	485493.56	26.00	EP, <PT
151	510742.75	485457.31	25.43	EP, BW
154	510722.34	485105.96	24.28	EP, ME
155	510729.14	485194.32	23.91	TC, SW GB
156	510721.75	485197.78	24.07	TC, SW GB
157	510708.31	485194.54	24.34	TC, SW GB, BL
158	510639.99	485311.27	--	SD CONNECTION
161	510700.06	485245.31	25.00	TC, GB, END TD
162	510688.67	485236.05	25.15	TC, GB SW, BL
164	510574.27	485377.57	25.23	TC, SW GB, <PT

LAYOUT TABLE

POINT NO.	NORTHING	EASTING	ELEVATION	DESCRIPTION
166	510565.20	485366.18	25.08	TC, SW GB, PT
167	510566.15	485352.12	25.00	TC, END TD, GB, PC
173	510754.95	485188.50	--	ME, WATER CONNECT
176	510724.34	485205.79	--	YARD HYDRANT
177	510734.57	485250.94	24.20	GB, CONC.
178	510730.62	485247.59	24.17	GB, CONC.
179	510731.45	485247.04	24.26	GB, CONC.
180	510730.19	485244.66	24.30	GB, CONC.
181	510729.35	485245.21	24.20	GB, CONC.
182	510722.83	485235.39	24.20	GB, CONC.
184	510862.73	485303.29	25.53	EP, PT, APRON
185	510849.09	485316.92	25.83	EP, GB
186	510850.12	485306.86	25.91	CONC, END RAMP
187	510847.82	485302.43	26.41	CONC, BEGIN RAMP
188	510842.72	485305.17	26.41	CONC, BEGIN RAMP
189	510845.09	485309.56	25.91	CONC, END RAMP
190	510737.32	485262.31	24.35	BEGIN CURB/RAMP, EC
191	510826.61	485323.24	25.25	EP, PCC
260	510710.69	485169.00	--	CL LPOLE
261	510699.31	485215.57	--	CL LPOLE
262	510589.59	485319.20	--	CL LPOLE
263	510732.03	485224.97	--	CL LPOLE
264	510619.63	485325.96	--	CL LPOLE
265	510589.92	485349.66	--	CL LPOLE
266	510563.46	485384.49	--	CL LPOLE
267	510540.72	485402.97	--	CL LPOLE
268	510572.45	485479.78	--	CL LPOLE
269	510617.92	485503.46	--	CL LPOLE
270	510733.74	485465.80	--	CL LPOLE
271	510839.97	485381.26	--	CL LPOLE
272	510872.22	485355.58	--	CL LPOLE
273	510849.50	485300.46	--	CL LPOLE
274	510788.73	485266.87	--	CL LPOLE
301	510566.70	485400.93	--	RAMP BL END
302	510535.10	485362.03	21.34	RAMP BL PT
303	510479.58	485314.75	9.01	RAMP BL PC
304	510387.63	485261.87	-4.00	RAMP BL BEGIN
305	510553.01	485367.53	24.00	FG, AR, GB
306	510543.68	485356.93	21.70	FG, AR, GB
307	510539.89	485334.32	14.14	FG, ME
308	510504.36	485308.19	7.10	FG, ME
309	510493.58	485312.50	10.99	FG, AR, GB
310	510480.22	485331.33	10.00	FG, END AR, GB

LAYOUT TABLE

POINT NO.	NORTHING	EASTING	ELEVATION	DESCRIPTION
311	510461.86	485291.39	4.88	FG, AR, GB
312	510446.88	485279.68	2.68	FG, END AR, GB
313	510397.99	485248.65	-4.00	FG, ME
314	510540.42	485377.86	23.95	FG, ME
315	510553.52	485394.44	24.71	FG, EC
316	510540.55	485405.11	24.25	FG, AR, GB, SW
317	510531.41	485412.67	23.92	FG, ME, BL
318	510488.24	485320.03	10.72	FG, GB, POC BL
319	510514.91	485367.03	10.72	FG, AR, GB
400	510729.45	485457.67	25.20	EP, GB, CL CB
401	510660.01	485345.25	25.09	RE
402	510653.03	485334.02	24.84	EP, CL CB
403	510751.06	485261.20	24.15	EP, CL CB
404	510752.01	485233.63	23.10	EP, CL CB
405	510738.80	485234.86	24.90	CL DD RIM
406	510632.55	485315.70	24.90	CL DD RIM
407	510825.75	485279.27	24.63	EP, CL CB
500	510711.50	485179.76	24.26	RAIL BL, TC, PC, <PT
501	510712.15	485159.64	24.34	RAIL BL, TC, <PT
502	510713.71	485149.70	24.38	RAIL BL, TC, <PT
503	510558.56	485345.30	25.15	RAIL BL, TC, PC
504	510566.09	485384.07	25.15	END RAIL BL, TC
505	510556.93	485372.33	25.15	RAIL BL, TC, PC
506	510654.57	485269.11	25.02	RAIL BL, TC, ME
507	510631.15	485287.73	25.02	RAIL BL, TC, ME
508	510712.34	485048.82	24.69	BEGIN RAIL BL, TC
509	510712.98	485061.37	24.65	RAIL BL, TC, <PT
510	510697.91	485221.08	24.85	RAIL BL, TC, PCC
511	510673.52	485252.76	25.15	RAIL BL, TC, PT
512	510664.59	485260.78	25.15	RAIL BL, TC, <PT
513	510553.39	485355.94	25.15	RAIL BL, TC, PT
514	510553.12	485359.29	25.15	RAIL BL, TC, PC

TABLE ABBREVIATIONS:

<PT=	ANGLE POINT
BL=	BASELINE
BTM=	BOTTOM
BW=	BACK OF WALK
CB=	CATCH BASIN
CL=	CENTERLINE
CONC=	CONCRETE
DD=	DECK DRAIN
EC=	EDGE OF CONCRETE
EP=	EDGE OF PAVEMENT
FG=	FINISH GRADE
GB=	GRADE BREAK
LPOLE=	LIGHT POLE
ME=	MATCH EXISTING
PC=	POINT OF CURVATURE
PCC=	POINT OF COMPOUND CURVE
POC=	POINT ON CURVE
PT=	POINT OF TANGENCY
RAIL=	RAILING
RE=	RIM ELEVATION
SD=	STORM DRAIN
SW=	SEAWALK/SIDEWALK
TC=	TOP OF CONCRETE FG
TD=	TRENCH DRAIN
TRANS=	TRANSITION
VG=	VALLEY GUTTER

NOTE:

TABLE ELEVATIONS AT MATCH POINTS ARE SHOWN FOR REFERENCE PURPOSES ONLY, MATCHING EXISTING SURFACES SHALL TAKE PRECEDENCE, NOTIFY ENGINEER PRIOR TO GRADING OF ANY SUBSTANTIAL DISCREPANCIES. SEE SHEET 2.04 FOR SEAWALK BASELINE POINT LOCATION.

CITY & BOROUGH OF JUNEAU
ALASKA'S CAPITAL CITY
DOCKS & HARBORS

REVISIONS

REV.	DATE	DESCRIPTION	DWN.	CKD.	APP.

PND ENGINEERS, INC.
9360 Glacier Highway Ste 100
Juneau, Alaska 99801
Phone: 907-586-2093
Fax: 907-586-2099
www.pndengineers.com

DESIGN: BMI CHECKED: CRS
DRAWN: WRB APPROVED: CRS
SCALE: SCALE IN FEET 0 10 20 FT.

STATE OF ALASKA 49TH Charles R. Somerville CE-8845 REGISTERED PROFESSIONAL ENGINEER
DATE: 03/24/2025

CITY & BOROUGH OF JUNEAU, ALASKA
STATTER HARBOR IMPROVEMENTS PH III(D)
CBJ CONTRACT NO. DH25-023

SHEET TITLE:
GRADING POINTS AND LAYOUT TABLES

PND PROJECT NO.: 182069 C.A.N. NO.: AECC250

1.09

STORM DRAIN PIPING

PIPE DESIGNATION	NOMINAL ø	LENGTH	FROM	IE	TO	IE
P1	18" CPEP	135.00	S1	20.55	S2	19.20
P2	18" CPEP	14.00	S3	20.04	S2	19.50
P3	18" CPEP	25.00	S4	20.45	S5	20.20
P4	6" PVC	12.00	S6	21.58	S5	21.20
P5	6" PVC	9.00	S7	22.00	WYE	21.0±

STORM DRAIN STRUCTURES

STRUCTURE DESIGNATION	SITE PLAN POINT NO.	NORTHING	EASTING	POINT ELEVATION
S1	400	510729.45	485457.67	25.20
S2	401	510660.01	485345.25	25.09
S3	402	510653.03	485334.02	24.84
S4	403	510751.06	485261.20	24.15
S5	404	510752.01	485233.63	23.10
S6	405	510738.80	485234.86	24.90
S7	406	510632.55	485315.70	24.90
S8	407	510825.75	485279.27	24.63

NOTES:
1. CATCH BASIN PER STORM DRAIN PLAN CALLOUT
2. POINT NO. AND POINT ELEVATION FOR CURB INLETS REFERENCE THE EDGE OF AC PAVEMENT @ THE CENTER OF THE GRATE
3. POINT NO. AND POINT ELEVATION FOR STRUCTURES LOCATED OUTSIDE OF CURBS REFERENCE THE CENTER OF STRUCTURE
4. RESET EXISTING FRAME AND GRATE AT STRUCTURE S2 AND S8

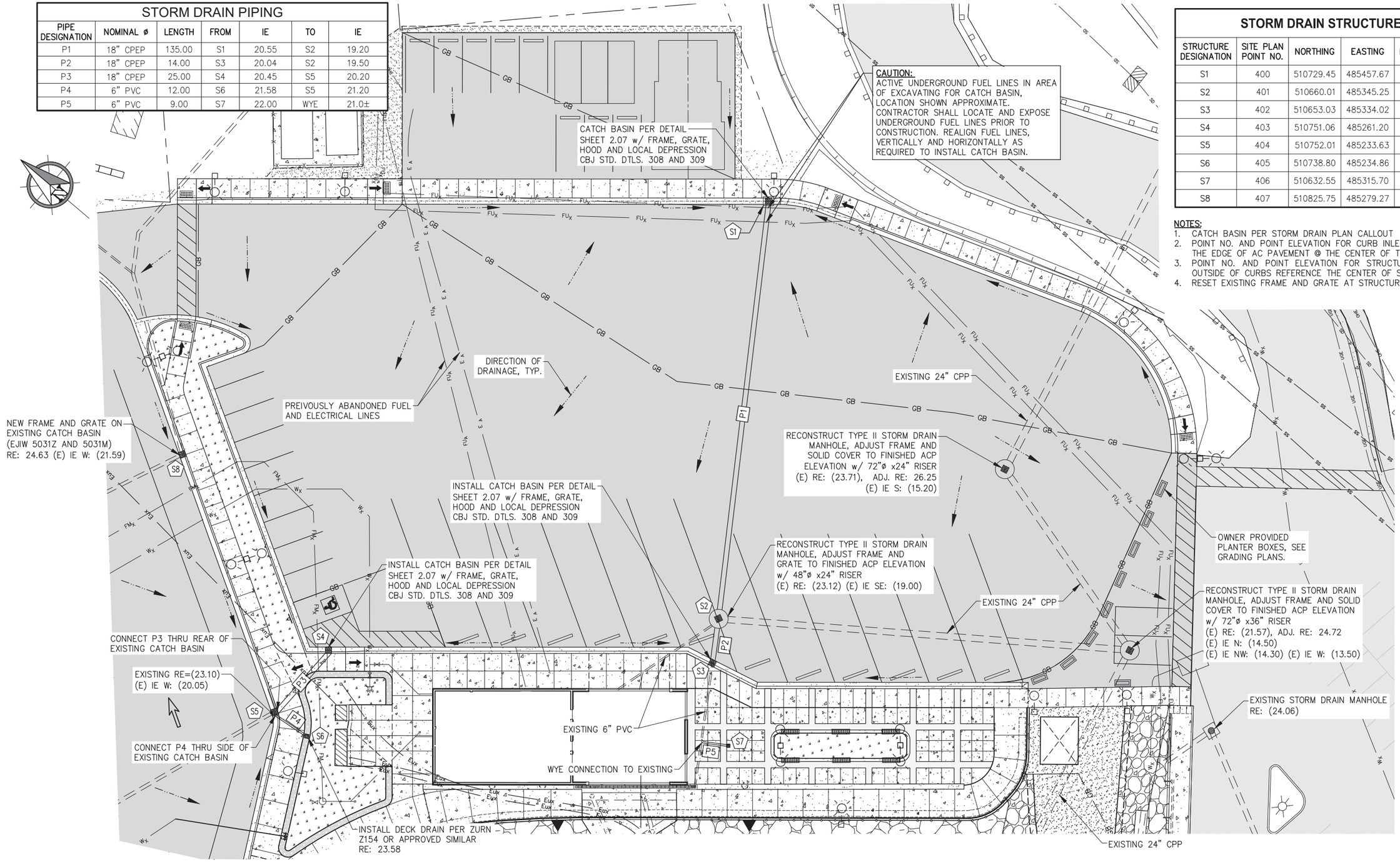

REVISIONS

REV.	DATE	DESCRIPTION	DWN.	CKD.	APP.

PND ENGINEERS, INC.
9360 Glacier Highway Ste 100
Juneau, Alaska 99801
Phone: 907-586-2093
Fax: 907-586-2099
www.pndengineers.com

DESIGN: BMI CHECKED: CRS
DRAWN: WRB APPROVED: CRS
SCALE: SCALE IN FEET 0 15 30 FT.

STATE OF ALASKA 49TH Charles R. Somerville CE-8845 REGISTERED PROFESSIONAL ENGINEER
DATE: 03/24/2025

CITY & BOROUGH OF JUNEAU, ALASKA
STATTER HARBOR IMPROVEMENTS PH III(D)
CBJ CONTRACT NO. DH25-023

SHEET TITLE:
STORM DRAIN PLAN

PND PROJECT NO.: 182069 C.A.N. NO.: AECC250

1.10

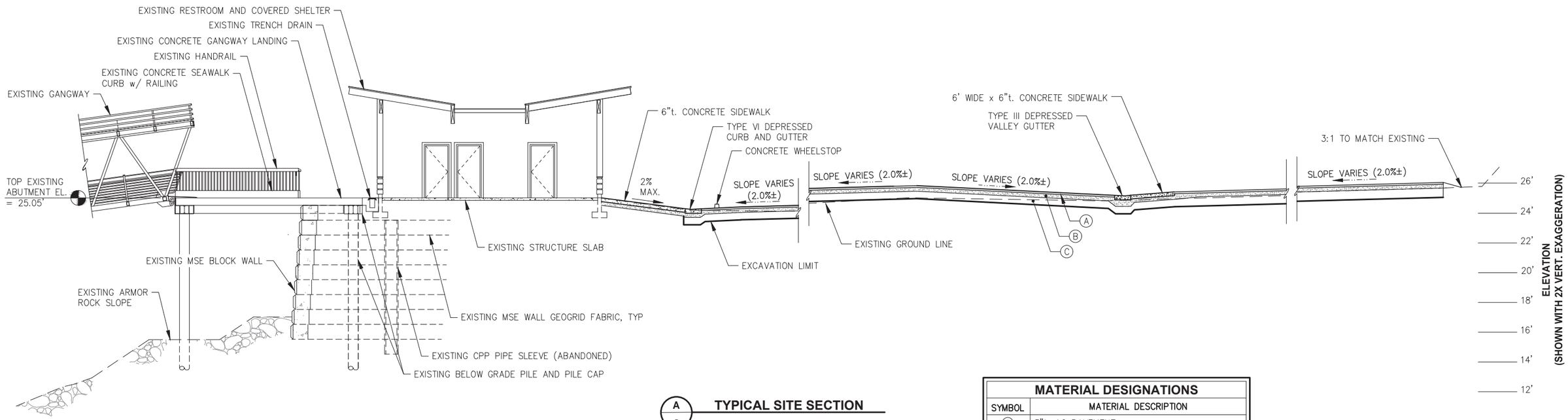

A - **TYPICAL SITE SECTION**

MATERIAL DESIGNATIONS	
SYMBOL	MATERIAL DESCRIPTION
A	3"t. AC PAVEMENT
B	6"t. BASE COURSE, GRADING D-1
C	12"t. MIN. CLASS A SHOT ROCK BORROW

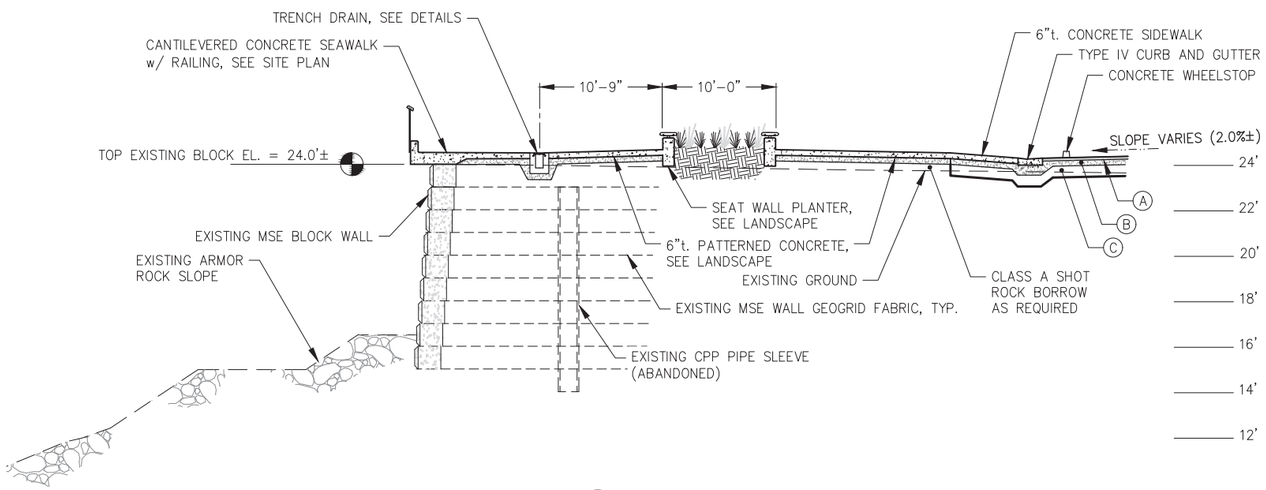

B - **TYPICAL SITE SECTION**

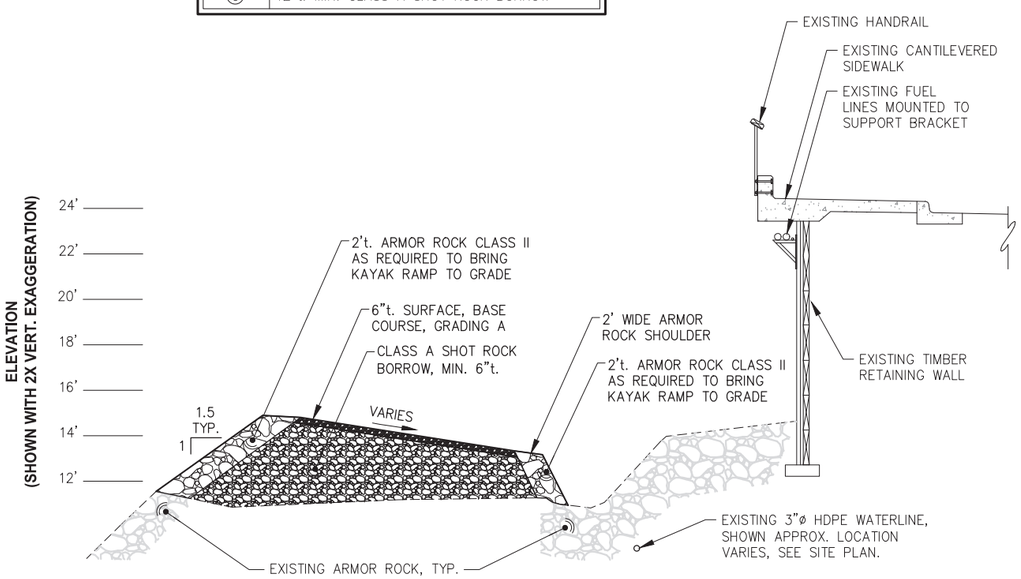

C - **TYPICAL SITE SECTION**

SEE SHEET 2.02, KAYAK LAUNCH RAMP PLAN AND PROFILE, FOR ADDITIONAL DETAIL.

REVISIONS

REV.	DATE	DESCRIPTION	DWN.	CKD.	APP.

PND ENGINEERS, INC.
9360 Glacier Highway Ste 100
Juneau, Alaska 99801
Phone: 907-586-2093
Fax: 907-586-2099
www.pndengineers.com

DESIGN: BMI CHECKED: CRS
DRAWN: WRB APPROVED: CRS
SCALE:

STATE OF ALASKA 49TH Charles R. Somerville CE-8845 REGISTERED PROFESSIONAL ENGINEER
DATE: 03/24/2025

CITY & BOROUGH OF JUNEAU, ALASKA
STATTER HARBOR IMPROVEMENTS PH III(D)
CBJ CONTRACT NO. DH25-023

SHEET TITLE: **SITE SECTIONS**

PND PROJECT NO.: 182069 C.A.N. NO.: AECC250

2.01

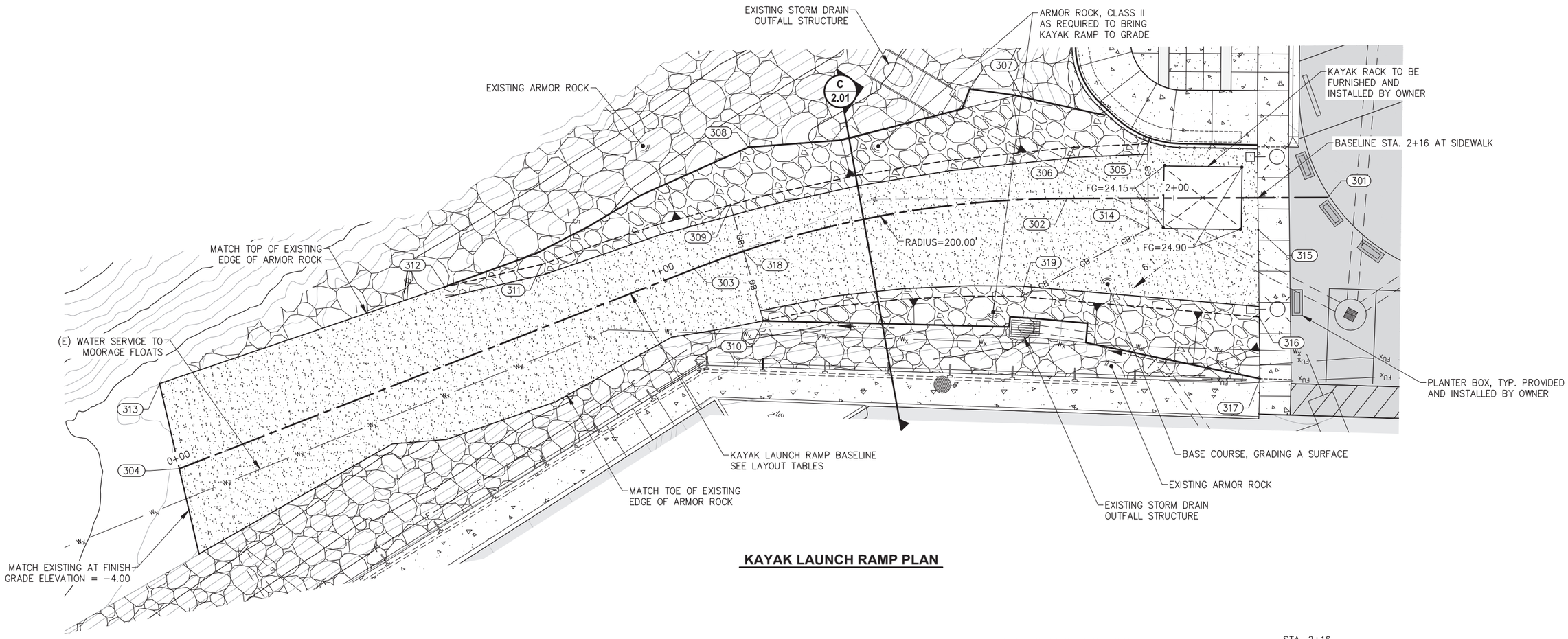

KAYAK LAUNCH RAMP PLAN

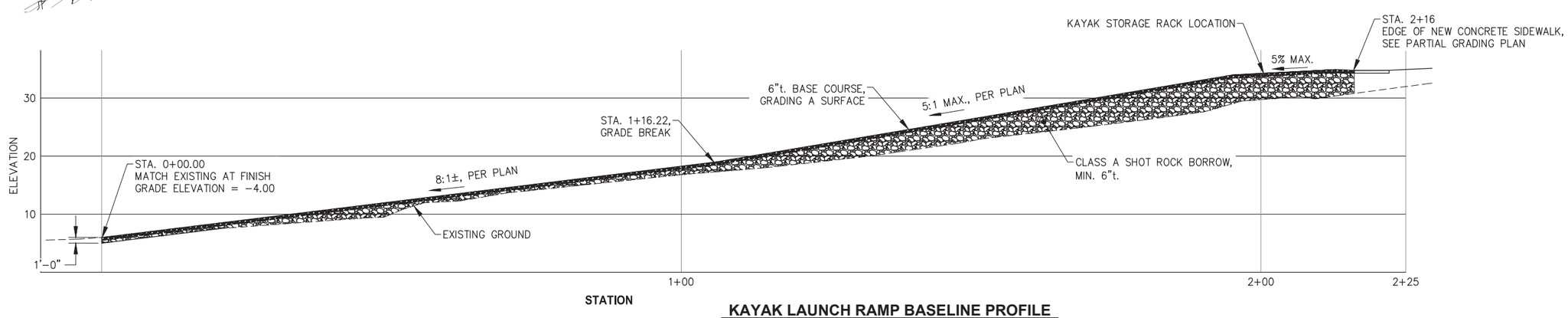

KAYAK LAUNCH RAMP BASELINE PROFILE

REVISIONS

REV.	DATE	DESCRIPTION	DWN.	CKD.	APP.

P N D ENGINEERS, INC.
9360 Glacier Highway Ste 100
Juneau, Alaska 99801
Phone: 907-586-2093
Fax: 907-586-2099
www.pndengineers.com

DESIGN: BMI CHECKED: CRS
DRAWN: WRB APPROVED: CRS
SCALE: SCALE IN FEET 0 10 20 FT.

STATE OF ALASKA 49TH Charles R. Somerville CE-8845 REGISTERED PROFESSIONAL ENGINEER
DATE: 03/24/2025

CITY & BOROUGH OF JUNEAU, ALASKA
STATTER HARBOR IMPROVEMENTS PH III(D)
CBJ CONTRACT NO. DH25-023

SHEET TITLE:
KAYAK LAUNCH RAMP PLAN AND PROFILE

2.02

PND PROJECT NO.: 182069 C.A.N. NO.: AECC250

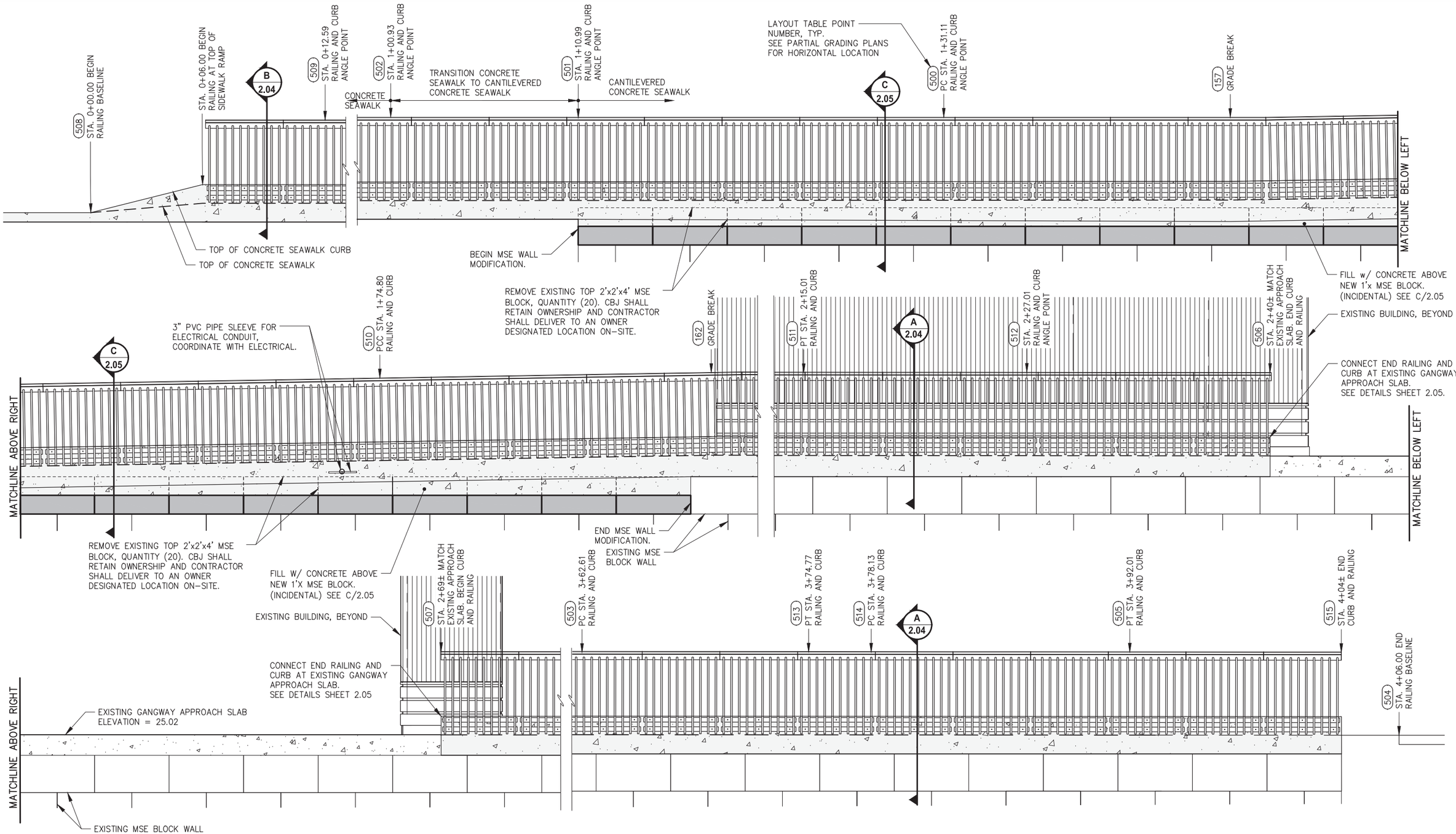

REVISIONS

REV.	DATE	DESCRIPTION	DWN.	CKD.	APP.

PND ENGINEERS, INC.
9360 Glacier Highway Ste 100
Juneau, Alaska 99801
Phone: 907-586-2093
Fax: 907-586-2099
www.pndengineers.com

DESIGN: BMI CHECKED: CRS
DRAWN: WRB APPROVED: CRS
SCALE:

STATE OF ALASKA 49TH Charles R. Somerville CE-8845 REGISTERED PROFESSIONAL ENGINEER
DATE: 03/24/2025

CITY & BOROUGH OF JUNEAU, ALASKA
STATTER HARBOR IMPROVEMENTS PH III(D)
CBJ CONTRACT NO. DH25-023

SHEET TITLE:
RAILING ELEVATION

2.03

PND PROJECT NO.: 182069 C.A.N. NO.: AECC250

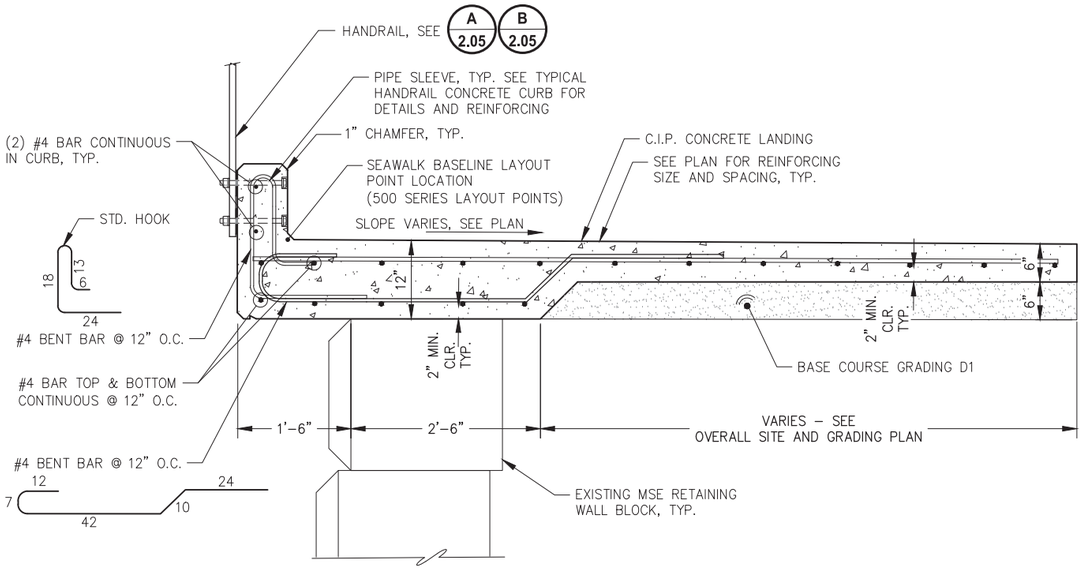

A - CANTILEVERED CONCRETE SEAWALK WITH RAILING (ON MSE WALL)

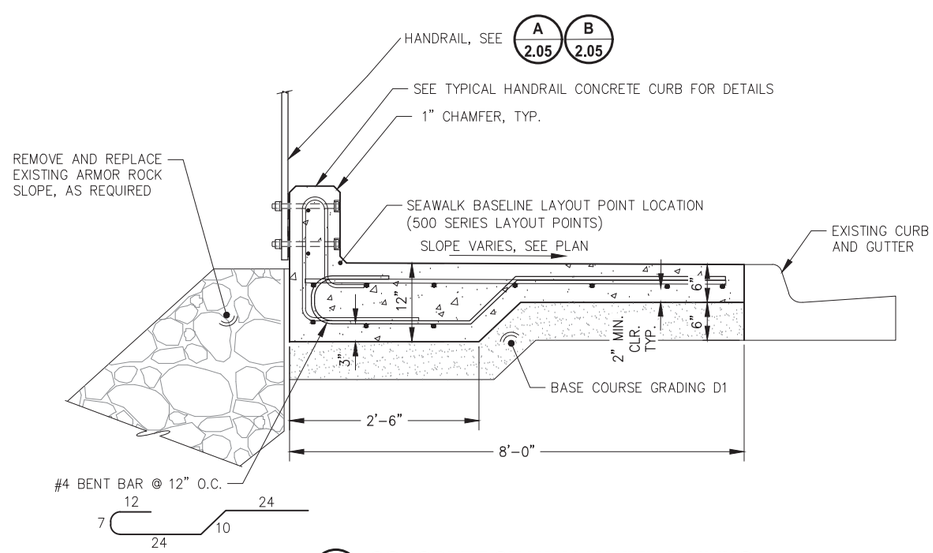

B - CONCRETE SEAWALK WITH RAILING (ON GRADE)

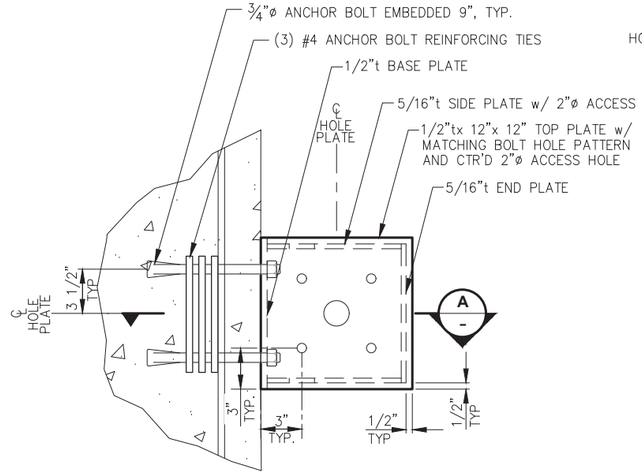

PLAN

NOTE: ALL JOINTS SHALL BE SEAL WELDED WITH 1/4" FILLET WELDS, ALL SIDES, ALL AROUND, UNLESS OTHERWISE NOTED.

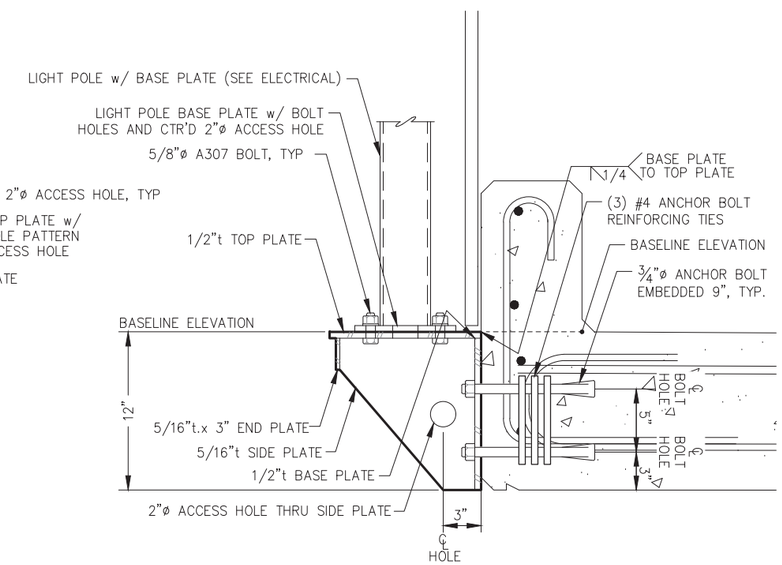

A - SECTION

C - LIGHT POLE BASE DETAIL

REVISIONS

REV.	DATE	DESCRIPTION	DWN.	CKD.	APP.

P N D ENGINEERS, INC.
9360 Glacier Highway Ste 100
Juneau, Alaska 99801
Phone: 907-586-2093
Fax: 907-586-2099
www.pndengineers.com

DESIGN: BMI CHECKED: CRS
DRAWN: WRB APPROVED: CRS
SCALE:

STATE OF ALASKA 49TH Charles R. Somerville CE-8845 REGISTERED PROFESSIONAL ENGINEER
DATE: 03/24/2025

CITY & BOROUGH OF JUNEAU, ALASKA
STATTER HARBOR IMPROVEMENTS PH III(D)
CBJ CONTRACT NO. DH25-023

SHEET TITLE: **RAILING DETAILS**

PND PROJECT NO.: 182069 C.A.N. NO.: AECC250

2.04

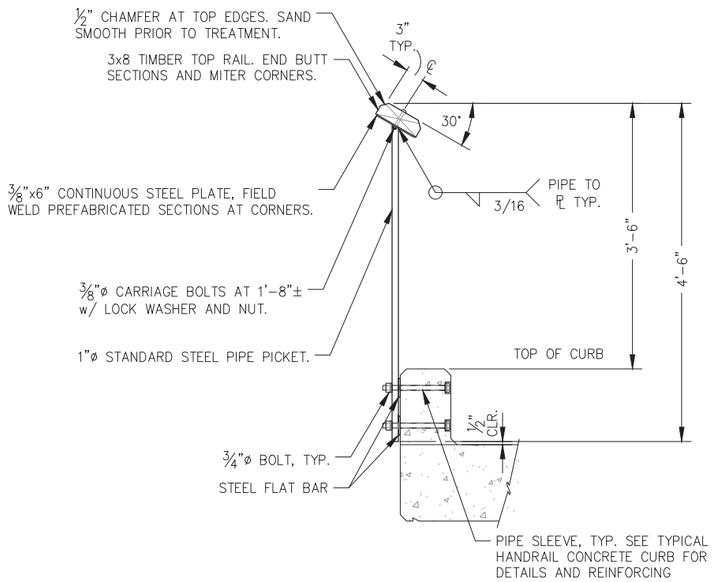

A - TYPICAL RAILING SECTION

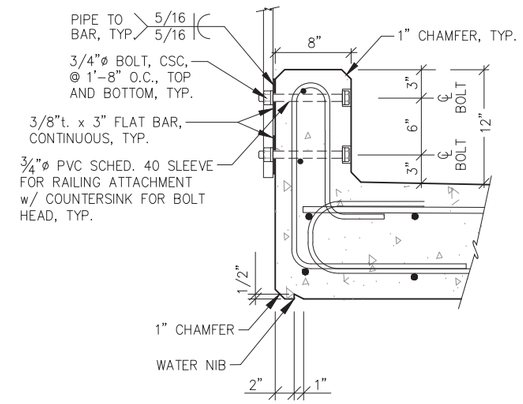

TYPICAL HANDRAIL CONNECTION AND CONCRETE CURB DETAIL

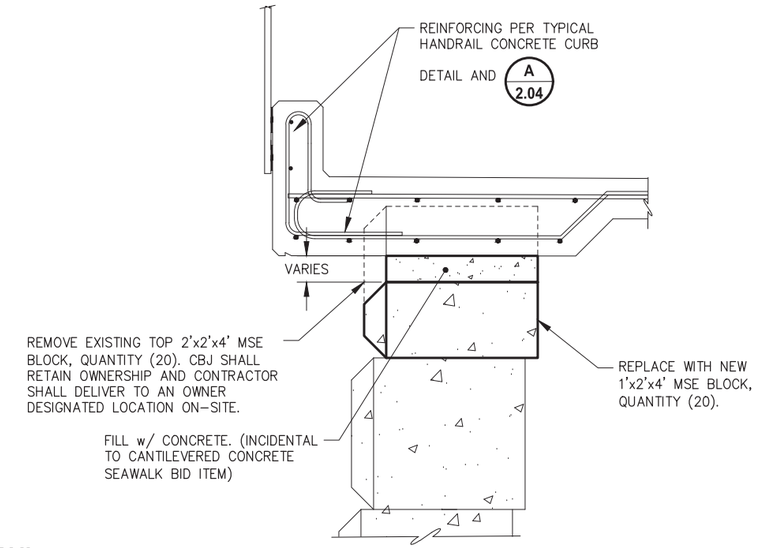

C - MSE WALL MODIFICATION DETAIL

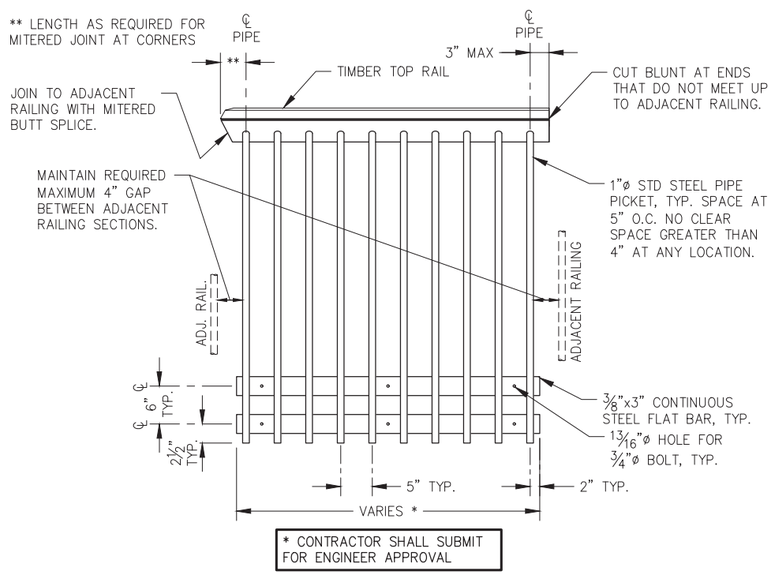

B - TYPICAL RAILING DETAIL

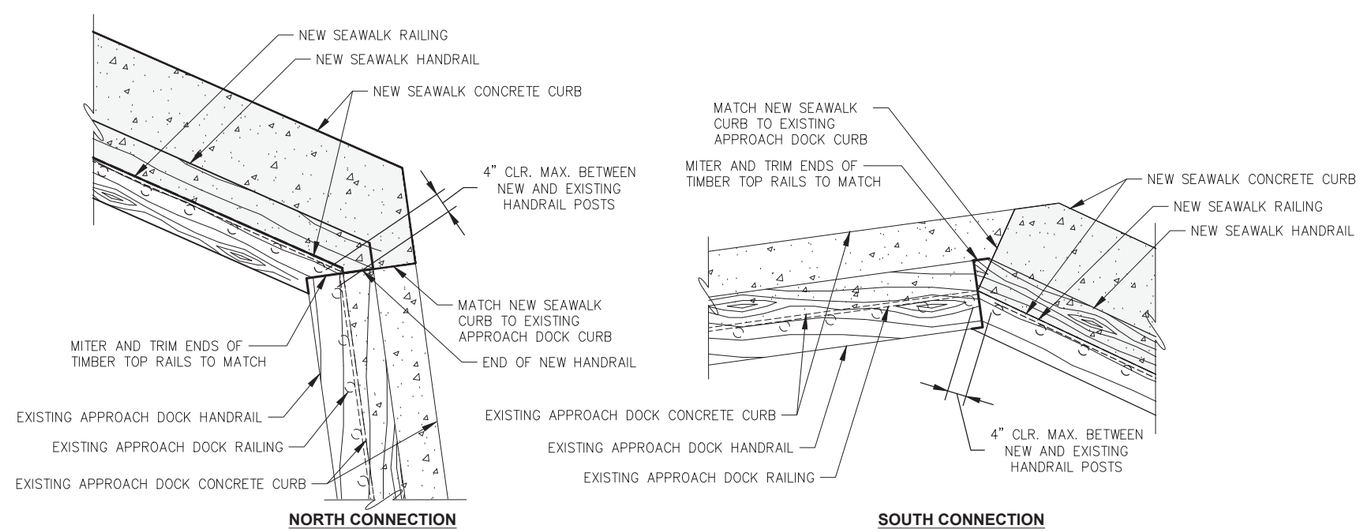

D - NEW SEAWALK RAILING TO EXISTING APPROACH DOCK RAILING CONNECTIONS

REVISIONS

REV.	DATE	DESCRIPTION	DWN.	CKD.	APP.

PND ENGINEERS, INC.
9360 Glacier Highway Ste 100
Juneau, Alaska 99801
Phone: 907-586-2093
Fax: 907-586-2099
www.pndengineers.com

DESIGN: BMI CHECKED: CRS
DRAWN: WRB APPROVED: CRS
SCALE:

STATE OF ALASKA 49TH Charles R. Somerville CE-8845 REGISTERED PROFESSIONAL ENGINEER
DATE: 03/24/2025

CITY & BOROUGH OF JUNEAU, ALASKA
STATTER HARBOR IMPROVEMENTS PH III(D)
CBJ CONTRACT NO. DH25-023

SHEET TITLE: **RAILING DETAILS**

PND PROJECT NO.: 182069 C.A.N. NO.: AECC250

2.05

GENERAL CURB & GUTTER NOTES:

1. THE VERTICAL MATCH POINT FOR ALL CURB AND GUTTER TRANSITIONS SHALL BE THE FLOWLINE.
2. CURB AND GUTTER TRANSITIONS SHALL BE GRADUAL OVER A MIN DISTANCE OF 6 LF PER ENGINEER DIRECTION.
3. ALL STEEL MUST HAVE A MINIMUM OF 2" OF CONCRETE COVER.
4. ALL JOINTS AND SEAMS SHALL BE TOOLED AND EDGED, SEE SHEET 2.07 FOR CONTROL JOINT DTL.
5. STEEL TROWELING FINISH REQUIRED PRIOR TO BROOM FINISHING OF ALL SURFACES.
6. CONCRETE INTERNATIONAL CORPORATION ASHFORD FORMULA OR APPROVED EQUAL SHALL BE APPLIED AS A CURING COMPOUND. APPLICATION SHALL EXPLICITLY CONFORM TO THE MANUFACTURER'S RECOMMENDATIONS.
7. BED ALL TYPES OF CURB AND GUTTER w/ 6"t. MIN LAYER OF BASE COURSE GRADING D-1, ALL AROUND.
8. SUBBASE MATERIALS SHALL BE PER APPLICABLE FILL SECTION, EXCEPT AS NOTED.
9. CURBS SHALL HAVE POLY-FIBER REINFORCEMENT UNO, SEE SPECIFICATIONS.

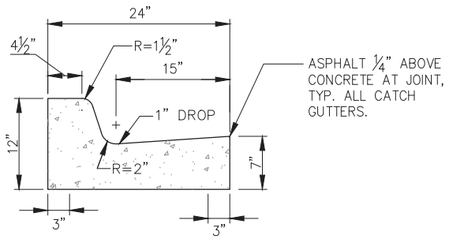

TYPE I CURB AND GUTTER STANDARD CATCH

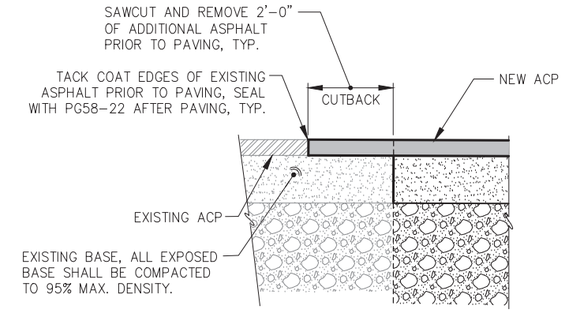

AC PAVEMENT MATCH

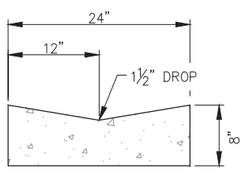

TYPE III VALLEY GUTTER

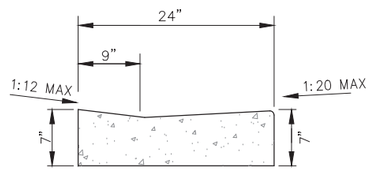

TYPE IV DEPRESSED CURB (ADA COMPLIANT)

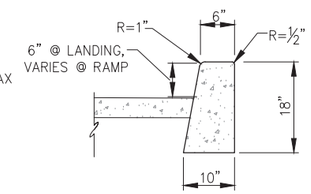

TYPE V BACKING CURB

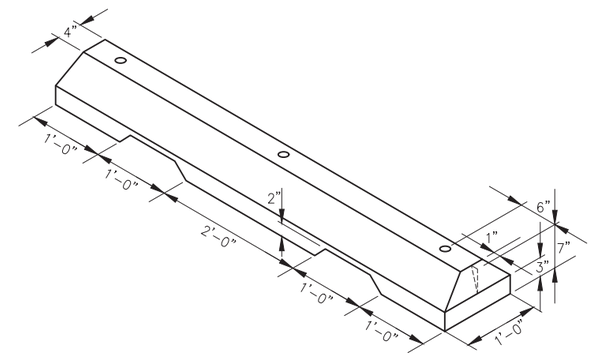

REMOVABLE CONCRETE WHEEL STOP DETAIL

(20) REQ'D. FOR SITE. CONTRACTOR SHALL PROVIDE (16) ADDITIONAL WHEEL STOPS TO OWNER AND DELIVER TO AN OWNER DESIGNATED LOCATION ON-SITE.

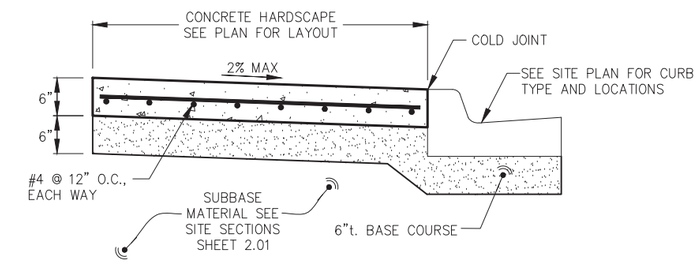

SIDEWALK/HARDSCAPE NOTES:

1. ALL JOINTS SHALL BE EDGED.
2. EXPANSION JOINTS SHALL BE MAX ½", MIN ¼", WITH NO GAPS FOR WATER INTRUSION.
3. STEEL TROWELING FINISH REQUIRED PRIOR TO BROOM FINISHING ON ALL SURFACES.
4. CONCRETE INTERNATIONAL CORPORATION ASHFORD FORMULA OR APPROVED EQUAL SHALL BE APPLIED AS A CURING COMPOUND. APPLICATION SHALL CONFORM TO THE MANUFACTURERS INSTRUCTIONS.

CONCRETE SIDEWALK/HARDSCAPE SECTION

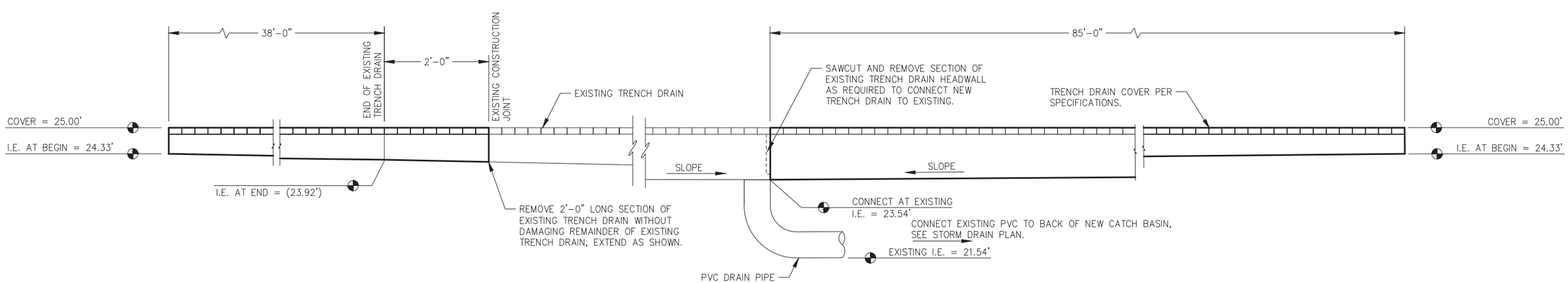

TRENCH DRAIN PROFILE

REVISIONS

REV.	DATE	DESCRIPTION	DWN.	CKD.	APP.

PND ENGINEERS, INC.
9360 Glacier Highway Ste 100
Juneau, Alaska 99801
Phone: 907-586-2093
Fax: 907-586-2099
www.pndengineers.com

DESIGN: BMI CHECKED: CRS
DRAWN: WRB APPROVED: CRS
SCALE:

STATE OF ALASKA 49TH Charles R. Somerville CE-8845 REGISTERED PROFESSIONAL ENGINEER
DATE: 03/24/2025

CITY & BOROUGH OF JUNEAU, ALASKA
STATTER HARBOR IMPROVEMENTS PH III(D)
CBJ CONTRACT NO. DH25-023

SHEET TITLE: **SITE DETAILS**

PND PROJECT NO.: 182069 C.A.N. NO.: AECC250

2.06

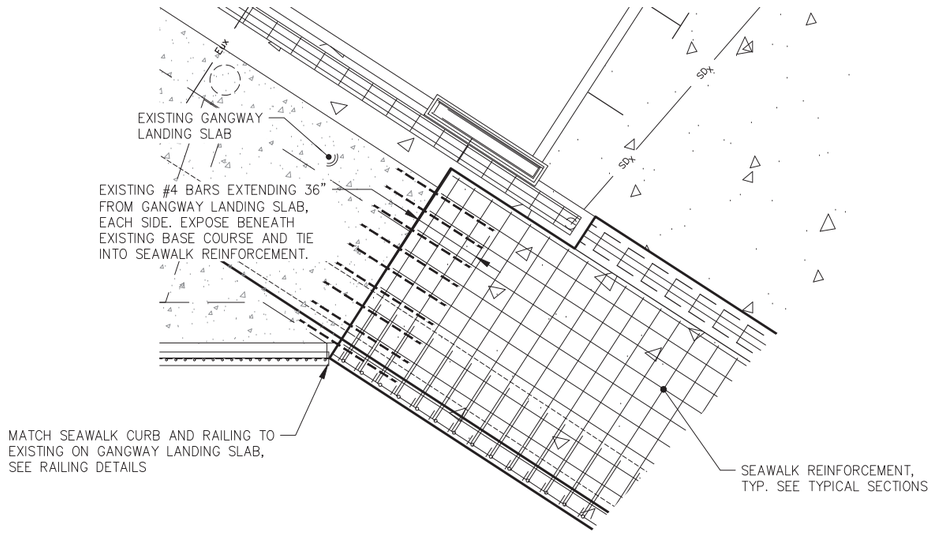

SEAWALK CONNECTION TO EXISTING ABUTMENT

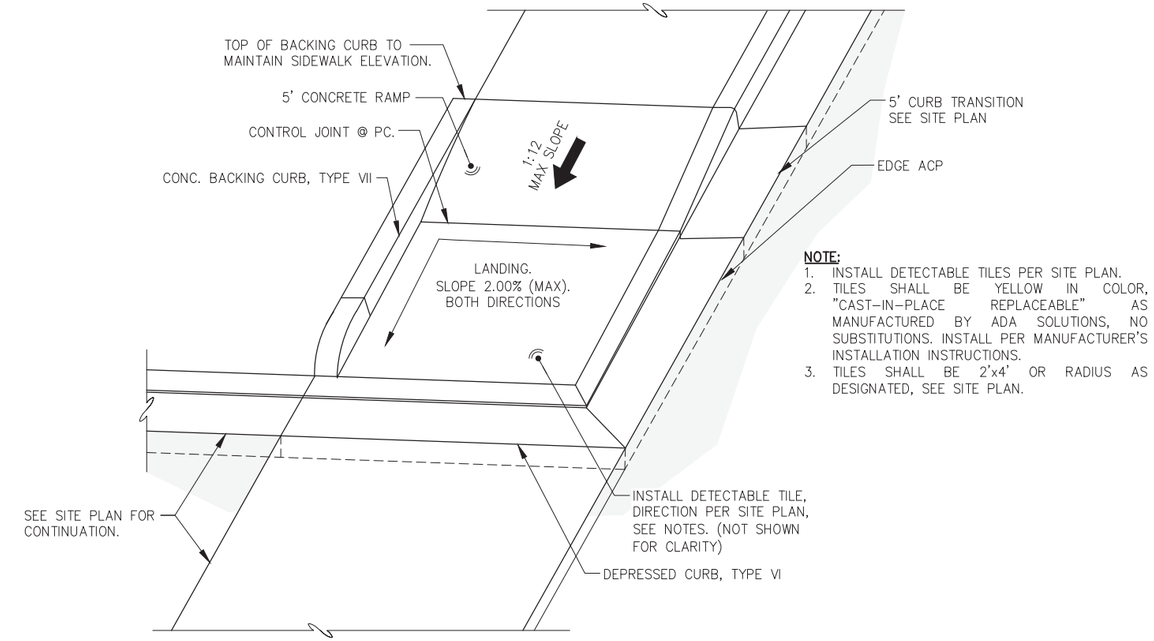

NOTE:
1. INSTALL DETECTABLE TILES PER SITE PLAN.
2. TILES SHALL BE YELLOW IN COLOR, "CAST-IN-PLACE REPLACEABLE" AS MANUFACTURED BY ADA SOLUTIONS, NO SUBSTITUTIONS. INSTALL PER MANUFACTURER'S INSTALLATION INSTRUCTIONS.
3. TILES SHALL BE 2'x4' OR RADIUS AS DESIGNATED, SEE SITE PLAN.

SIDEWALK RAMP w/ LANDING

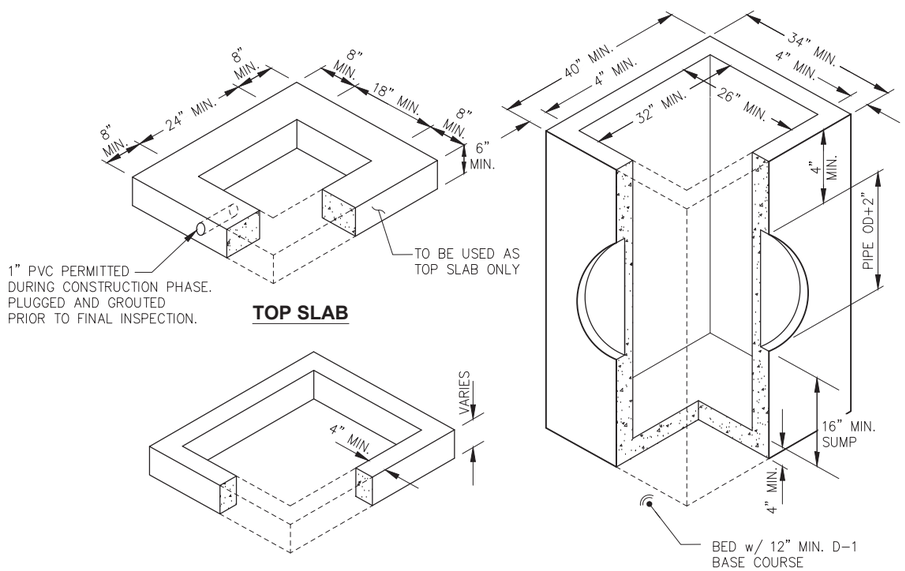

STORM SEWER TYPE IV CATCH BASIN DETAIL

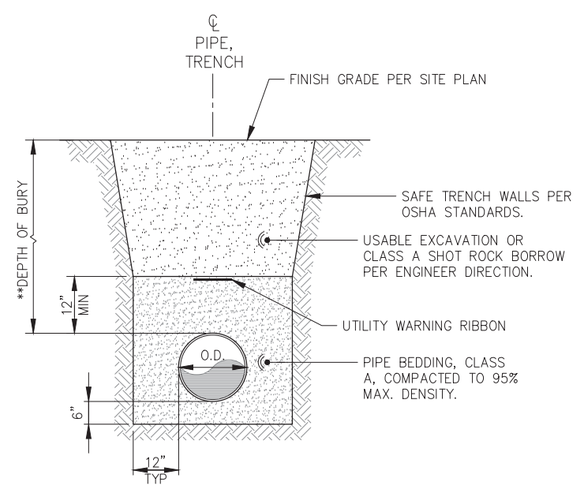

PIPE TRENCH - TYPICAL SECTION

NOTE:
** PER SITE PLAN. MAINTAIN 5'-0" MIN. ON ALL WATERLINES.

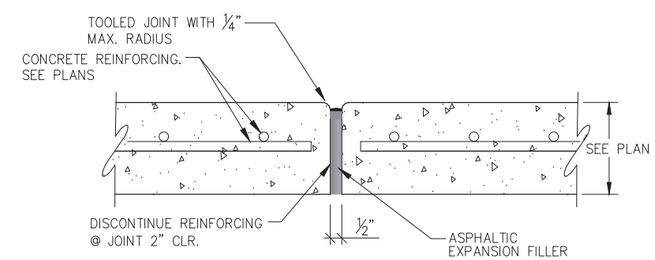

EXPANSION JOINT

NOTE: EXPANSION JOINTS IN CURB & GUTTER PLACED MAX. EVERY 30'-0" O.C.

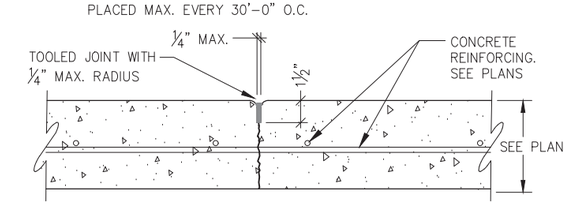

CONTROL JOINT

NOTE:
ALL JOINTS SHALL BE TOOLED AS SHOWN.

REVISIONS

REV.	DATE	DESCRIPTION	DWN.	CKD.	APP.

P | N | D ENGINEERS, INC.
9360 Glacier Highway Ste 100
Juneau, Alaska 99801
Phone: 907-586-2093
Fax: 907-586-2099
www.pndengineers.com

DESIGN: BMI CHECKED: CRS
DRAWN: WRB APPROVED: CRS
SCALE:

STATE OF ALASKA 49TH Charles R. Somerville CE-8845 REGISTERED PROFESSIONAL ENGINEER
DATE: 03/24/2025

CITY & BOROUGH OF JUNEAU, ALASKA
STATTER HARBOR IMPROVEMENTS PH III(D)
CBJ CONTRACT NO. DH25-023

SHEET TITLE: **SITE DETAILS**

PND PROJECT NO.: 182069 C.A.N. NO.: AECC250

2.07

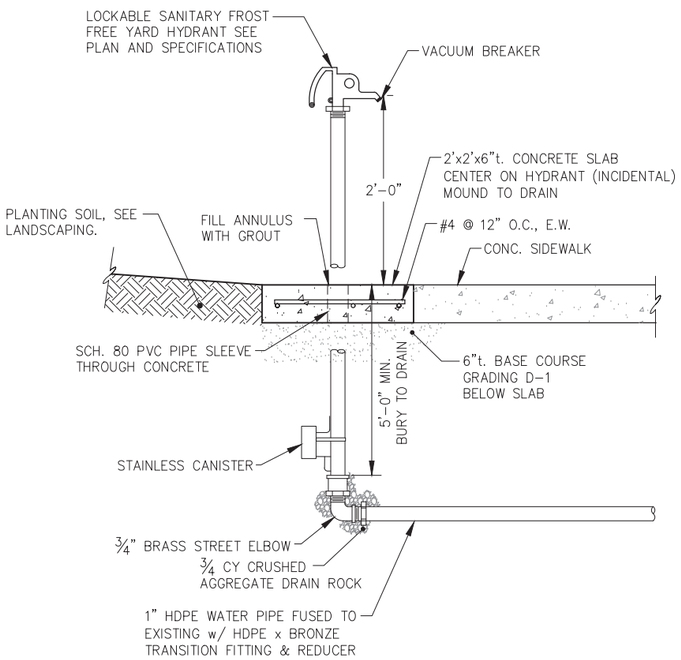

YARD HYDRANT DETAIL

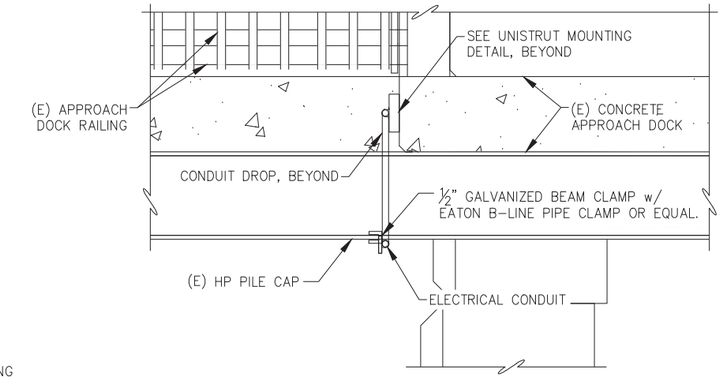

BEAM CLAMP MOUNTING DETAIL

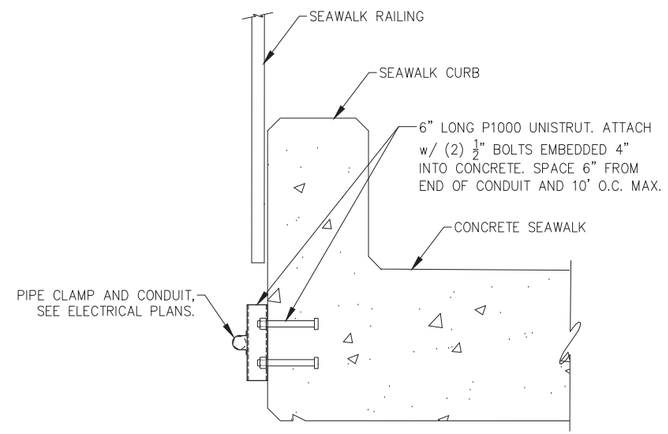

UNISTRUT MOUNTING DETAIL

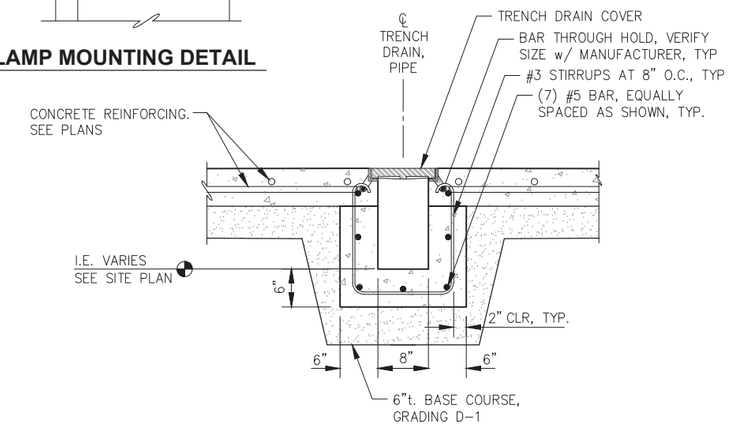

TRENCH DRAIN AT CONCRETE PLAZA

NOTE:
TRENCH DRAIN COVER SHALL BE THP-8-EZ CLOSE MESH BOLTING w/ COUNTERSUNK LAND BY GRATING PACIFIC TRENCH AND INLET SYSTEMS, HOT-DIPPED GALVANIZED.

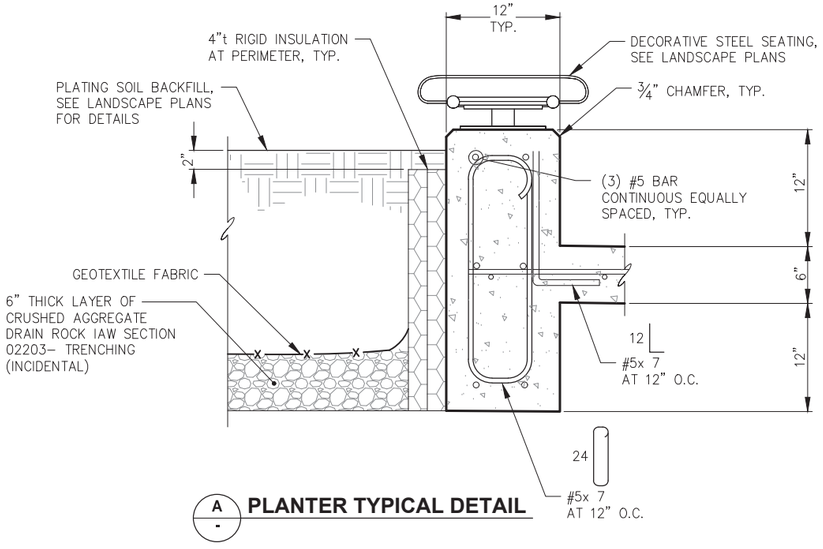

A - PLANTER TYPICAL DETAIL

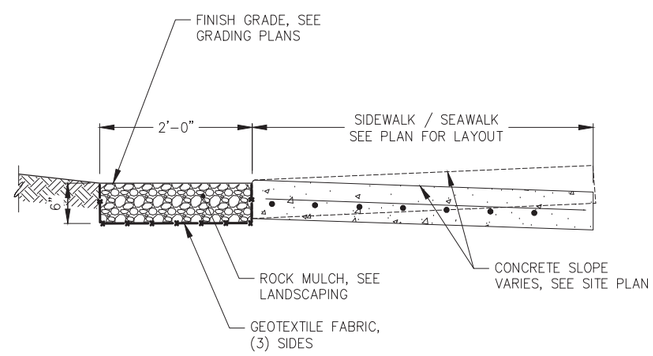

B - ROCK MULCH AT SIDEWALK / SEAWALK

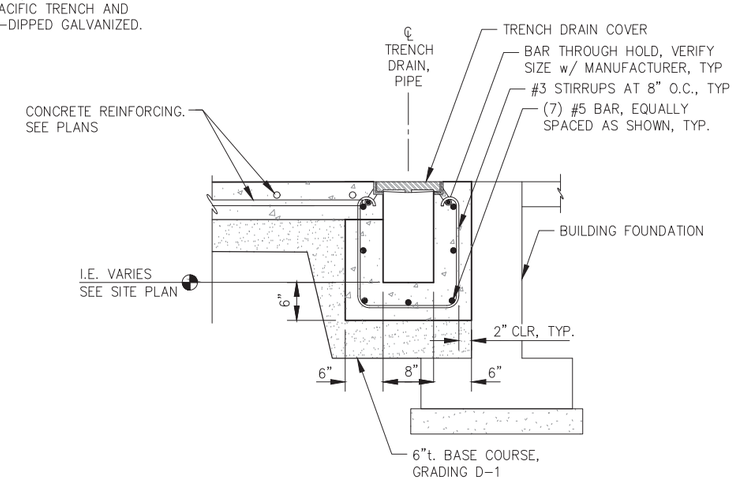

TRENCH DRAIN AT BUILDING FOUNDATION

REVISIONS

REV.	DATE	DESCRIPTION	DWN.	CKD.	APP.

P N D ENGINEERS, INC.
9360 Glacier Highway Ste 100
Juneau, Alaska 99801
Phone: 907-586-2093
Fax: 907-586-2099
www.pndengineers.com

DESIGN: BMI CHECKED: CRS
DRAWN: WRB APPROVED: CRS
SCALE:

STATE OF ALASKA 49TH Charles R. Somerville CE-8845 REGISTERED PROFESSIONAL ENGINEER
DATE: 03/24/2025

CITY & BOROUGH OF JUNEAU, ALASKA
STATTER HARBOR IMPROVEMENTS PH III(D)
CBJ CONTRACT NO. DH25-023

SHEET TITLE: **SITE DETAILS**

PND PROJECT NO.: 182069 C.A.N. NO.: AECC250

2.08

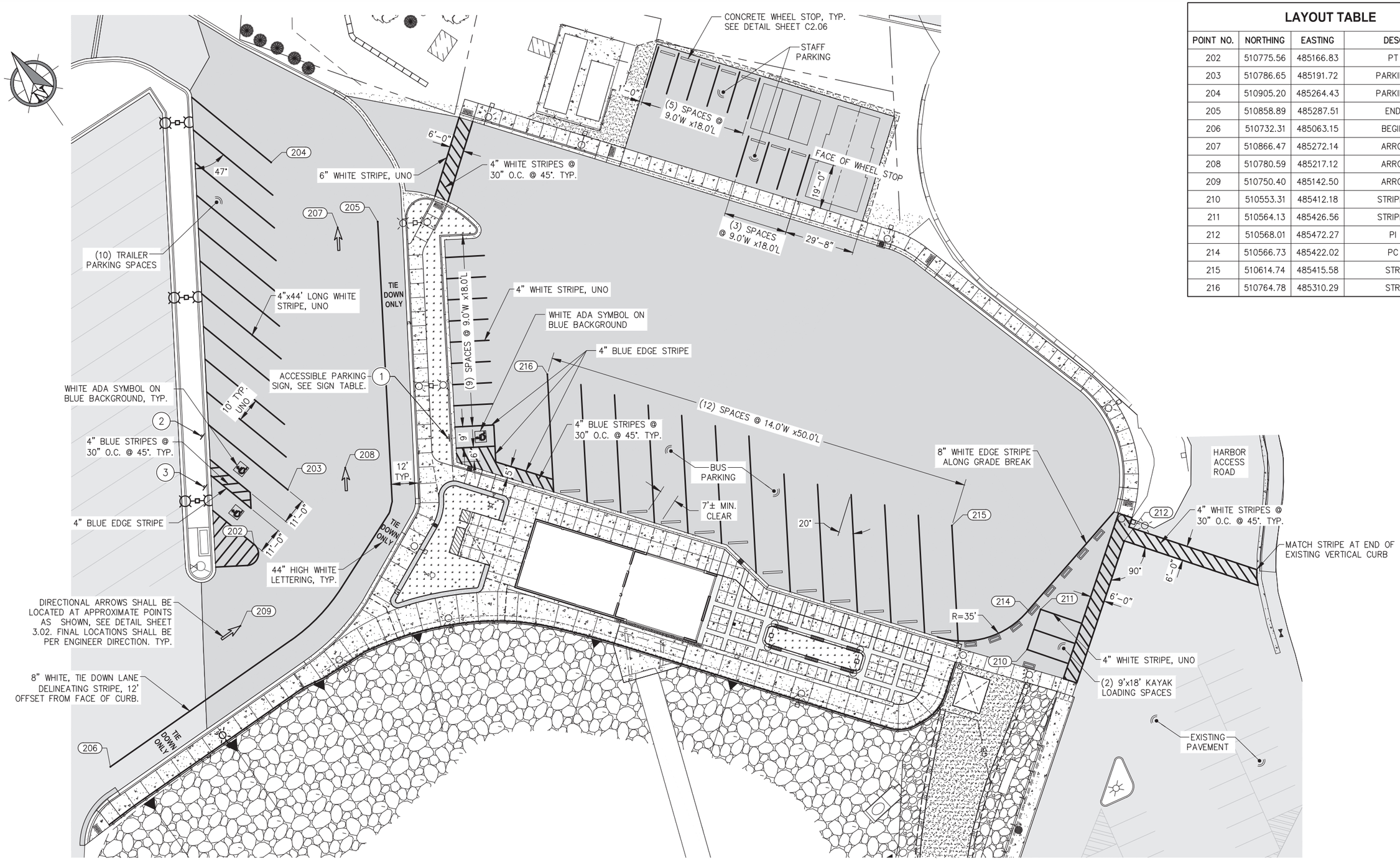

LAYOUT TABLE

POINT NO.	NORTHING	EASTING	DESCRIPTION
202	510775.56	485166.83	PT STRIPE
203	510786.65	485191.72	PARKING STRIPE
204	510905.20	485264.43	PARKING STRIPE
205	510858.89	485287.51	END STRIPE
206	510732.31	485063.15	BEGIN STRIPE
207	510866.47	485272.14	ARROW POINT
208	510780.59	485217.12	ARROW POINT
209	510750.40	485142.50	ARROW POINT
210	510553.31	485412.18	STRIPE CORNER
211	510564.13	485426.56	STRIPE CORNER
212	510568.01	485472.27	PI STRIPE
214	510566.73	485422.02	PC STRIPE
215	510614.74	485415.58	STRIPE END
216	510764.78	485310.29	STRIPE END

CITY & BOROUGH OF JUNEAU
ALASKA'S CAPITAL CITY
DOCKS & HARBORS

REVISIONS

REV.	DATE	DESCRIPTION	DWN.	CKD.	APP.

PND ENGINEERS, INC.
9360 Glacier Highway Ste 100
Juneau, Alaska 99801
Phone: 907-586-2093
Fax: 907-586-2099
www.pndengineers.com

DESIGN: BMI CHECKED: CRS
DRAWN: WRB APPROVED: CRS
SCALE: SCALE IN FEET 0 20 40 FT.

STATE OF ALASKA 49TH Charles R. Somerville CE-8845 REGISTERED PROFESSIONAL ENGINEER
DATE: 03/24/2025

CITY & BOROUGH OF JUNEAU, ALASKA
STATTER HARBOR IMPROVEMENTS PH III(D)
CBJ CONTRACT NO. DH25-023

SHEET TITLE:
STRIPING PLAN

3.01

PND PROJECT NO.: 182069 C.A.N. NO.: AECC250

SIGN SCHEDULE

SIGN NO.	MUTCD CODE NO.	DESCRIPTION	SIGN SIZE (INCH)	POST SIZE (INCH)	NORTHING	EASTING
1	R7-8	RESERVED PARKING	12 x 18	2.0" SQUARE PERFORATED TUBE	510766.32	485260.35
2	R7-8	RESERVED PARKING	12 x 18	2.0" SQUARE PERFORATED TUBE	510826.19	485174.50
3	R7-8	RESERVED PARKING	12 x 18	2.0" SQUARE PERFORATED TUBE	510807.79	485163.19

NOTES:

1. MUTCD CODE NO. FROM U.S. DOT FEDERAL HIGHWAY ADMINISTRATION "MANUAL ON UNIFORM TRAFFIC CONTROL DEVICES", DECEMBER 2023
2. SIGNS AND SIGN POSTS SHALL BE PROVIDED & INSTALLED IAW CBJ STANDARD 127A.

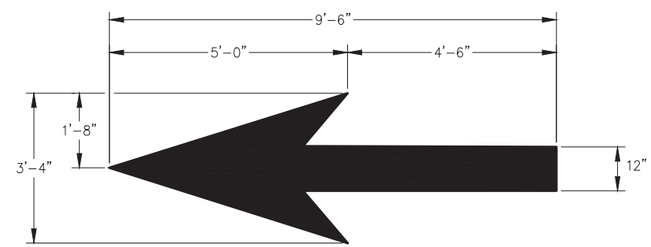

THROUGH LANE-USE ARROW

(QUANTITY: 3)

NOTE:
ARROWS TO BE LOCATED AT APPROXIMATE LOCATION SHOWN ON SIGNING AND STRIPING PLAN. EXACT LOCATION TO BE DETERMINED IN FIELD AS INSTRUCTED BY ENGINEER.

REVISIONS

REV.	DATE	DESCRIPTION	DWN.	CKD.	APP.

PND ENGINEERS, INC.
9360 Glacier Highway Ste 100
Juneau, Alaska 99801
Phone: 907-586-2093
Fax: 907-586-2099
www.pndengineers.com

DESIGN: BMI CHECKED: CRS
DRAWN: WRB APPROVED: CRS
SCALE:

STATE OF ALASKA 49TH Charles R. Somerville CE-8845 REGISTERED PROFESSIONAL ENGINEER
DATE: 03/24/2025

CITY & BOROUGH OF JUNEAU, ALASKA
STATTER HARBOR IMPROVEMENTS PH III(D)
CBJ CONTRACT NO. DH25-023

SHEET TITLE:
STRIPING AND SIGNAGE DETAILS

PND PROJECT NO.: 182069 C.A.N. NO.: AECC250

3.02

LUMINAIRE SCHEDULE

TYPE	LOAD	DESCRIPTION	MANUFACTURER	MODEL NUMBER	DRIVER	NOTES
A	95W	POLE MOUNT LED SITE LIGHT, DIE-CAST LOW-COPPER ALUMINUM HOUSING, CLEAR GLASS LENS, TYPE IV DISTRIBUTION, INTEGRAL ELECTRONIC DRIVER, BLACK FINISH POLE MOUNT OCCUPANCY SENSOR - 20% HIGH/LOW DIMMING	KIM LIGHTING	ISA-WP9SA2-54L-405-3K7-4-CLR-BC-VSF-UNV-BLT-SCH-S	120-277V	SEE NOTE 1. ROTATE TO AIM PER ARROW ON SITE PLAN
B1	27W	POLE MOUNT ARCHITECTURAL LED, ALUMINUM HOUSING, TYPE II DISTRIBUTION, INTEGRAL 0-10V DIMMABLE DRIVER, 2800 LUMENS, BLACK FINISH POLE MOUNT OCCUPANCY SENSOR - 20% HIGH/LOW DIMMING	BEACON nLIGHT	CAP-21-24NB-27-3K-T2-UNV-3RNW-BBT rSBOR 10 BK	120-277V	
B2	55W	POLE MOUNT ARCHITECTURAL LED, ALUMINUM HOUSING, TYPE IV DISTRIBUTION, INTEGRAL 0-10V DIMMABLE DRIVER, 5100 LUMENS, BLACK FINISH POLE MOUNT OCCUPANCY SENSOR - 20% HIGH/LOW DIMMING	BEACON nLIGHT	CAP-21-24NB-55-3K-T4-UNV-3RNW-BBT rSBOR 10 BK	120-277V	
POLE P1		10' TALL 4" DIAMETER ROUND STEEL POLE, HOT DIP GALVANIZED, OPEN TOP, BLACK FINISH SINGLE MOUNTING ARM BRACKET, LOW-COPPER ALUMINUM ALLOY, BLACK FINISH	KW INDUSTRIES BEACON AA-39-S-4-B-P-BBT	RSP10-4-11-KZ21	–	SEE NOTE 2
POLE P2		10' TALL 4" DIAMETER ROUND STEEL POLE, HOT DIP GALVANIZED, OPEN TOP, BLACK FINISH, BASE COVER DOUBLE MOUNTING ARM BRACKET, LOW-COPPER ALUMINUM ALLOY, BLACK FINISH	KW INDUSTRIES BEACON AA-39-S-4-C-P-BBT	RSP10-4-11-KZ21	–	SEE NOTE 2
POLE P3		20' TALL 4"x4" SQUARE STEEL POLE, HOT DIP GALVANIZED, BLACK FINISH	KW INDUSTRIES	SSP20-4-11-KZ21-2	–	SEE NOTE 3

NOTES

1. PROVIDE FOR RECEPTACLES IN POLES WHERE NOTED ON SITE PLAN.
2. PROVIDE A 3/4" DIA HUB AT 8FT FROM THE BASE FOR MOTION SENSORS.
3. PROVIDE A 3/4" DIA HUB AT 15 FT FROM THE BASE FOR CAMERAS. PROVIDE A SECOND 3/4" DIA HUB AT 18 FT FROM THE BASE FOR MOTION SENSORS.

ABBREVIATIONS

DIA	DIAMETER
GFI	GROUND FAULT INTERRUPTED
UON	UNLESS OTHERWISE NOTED
WP	WEATHERPROOF
XFMR	TRANSFORMER
OHE	OVERHEAD ELECTRIC
UGE	UNDERGROUND ELECTRIC
GRS	GALVANIZED RIGID STEEL
(E)	EXISTING TO REMAIN
(N)	NEW
TYP	TYPICAL
MIN	MINIMUM
W/	WITH
NO.	NUMBER

LEGEND

	DATA:
C	SECURITY CAMERA
	LIGHTING:
	EXTERIOR POLE MOUNTED LUMINAIRE
	POWER:
	DUPLEX RECEPTACLE, 18" AFG UON.
H	HANDHOLE
T	TRANSFORMER
T	POLE MOUNT TRANSFORMER
	GROUND ROD
	CIRCUIT BREAKER
	SWITCH OR DISCONNECT
	CONTACT
WPG	WEATHERPROOF WET LOCATION GFCI DUPLEX RECEPTACLE

Juneau, AK
9109 Mendenhall Mall Rd, Ste 4
Juneau, AK 99801
Phone: 907.780.6060
www.respec.com
AECC163270
RESPEC PROJECT NO.: I1131.24013

REVISIONS

REV.	DATE	DESCRIPTION	DWN.	CKD.	APP.

PND ENGINEERS, INC.
9360 Glacier Highway Ste 100
Juneau, Alaska 99801
Phone: 907-586-2093
Fax: 907-586-2099
www.pndengineers.com

DESIGN: SH CHECKED: BH
DRAWN: SH APPROVED:
SCALE:

DATE: 03/21/2025

CITY & BOROUGH OF JUNEAU, ALASKA
STATTER HARBOR IMPROVEMENTS PH III(D)
CBJ CONTRACT NO. DH25-023

SHEET TITLE:
SCHEDULE AND SYMBOLS

PND PROJECT NO.: 182069 C.A.N. NO.: AECC250

E001

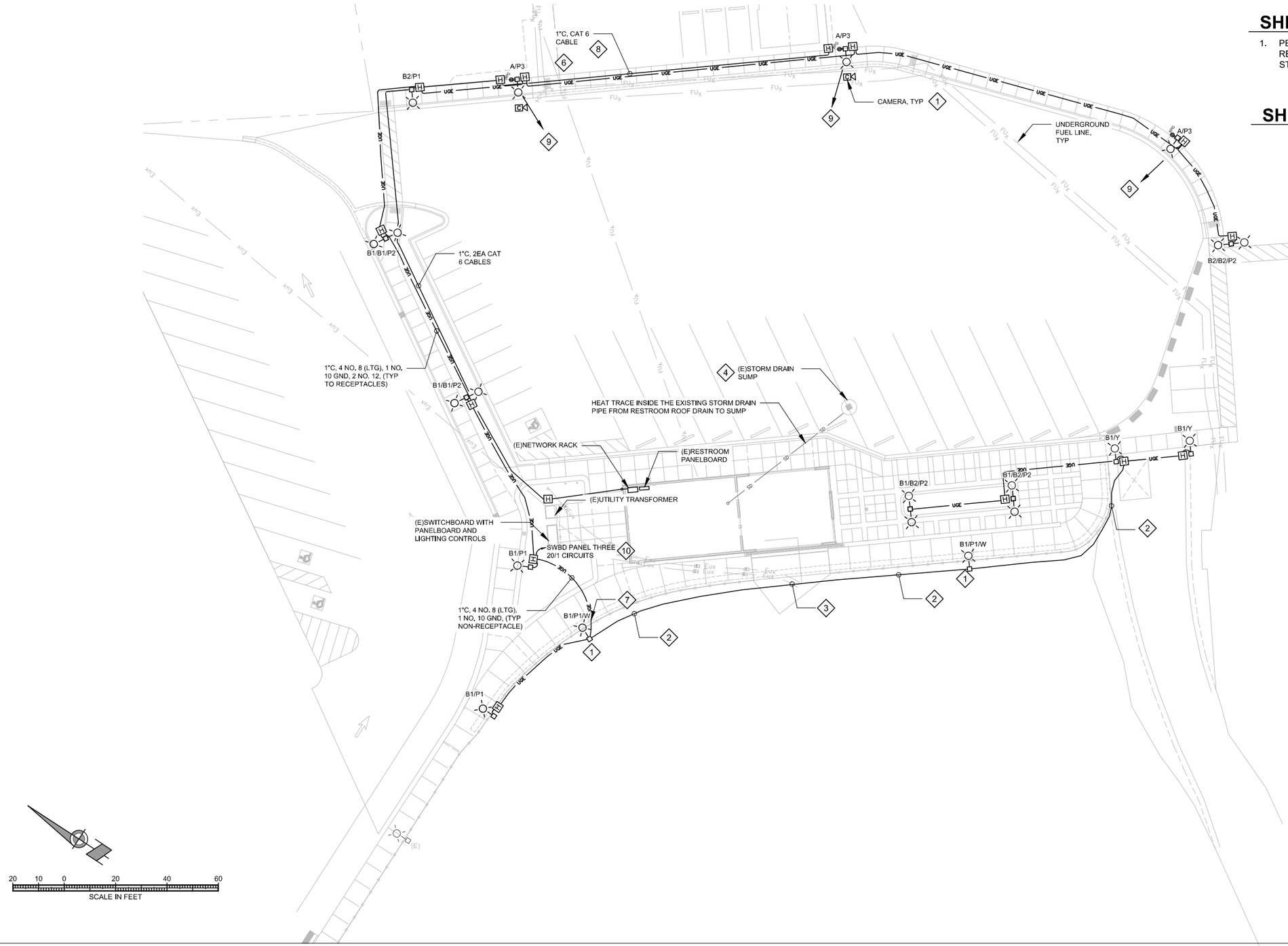

SHEET NOTES

1. PERFORM UNDERGROUND LOCATES BEFORE DIGGING. REVIEW THE CIVIL DRAWINGS FOR ALL KNOWN STRUCTURES AND PIPING BELOW GRADE.

SHEET KEYNOTES ◇#

1. TYPE W FOUNDATION SHOWN IN STRUCTURAL DRAWING.
2. MOUNT RTRC OR GRS CONDUIT TO THE EDGE OF THE SIDEWALK. COORDINATE MOUNTING/FASTENING INSERTS WITH THE CIVIL DESIGN.
3. ROUTE CONDUIT BELOW THE APPROACH TRESTLE. COORDINATE MOUNTING/FASTENING DEVICE CONNECTIONS WITH THE CIVIL DESIGN.
4. EXTEND THE HEAT TRACE INTO THE DRAIN SUMP AND WRAP AROUND THE INTERIOR PERIMETER, SPACING THE WRAPS 12 INCHES APART DOWN TO THE SUMP DRAIN. MAKE ONE WRAP AROUND THE DRAIN AND BRING THE END TO THE TOP OF THE SUMP. FASTEN THE HEAT TRACE TO THE WALL OF THE SUMP AT 24" INTERVALS.
5. CAMERAS AND MOUNTING BRACKET BY OTHERS.
6. THE CLASSIFIED AREA SURROUNDING THE FUEL TANK CONTAINING GASOLINE IS:
   > VENT: CLASS 1, DIV 1 WITHIN 5FT, AND CLASS 1, DIV 2 5FT TO 10FT FROM THE VENT IN ALL DIRECTIONS.
   > SHELL: CLASS 1, DIV 2 WITHIN 10FT.
7. ROUTE ABOVE THE BLOCK WALL AND BELOW THE SIDEWALK. COORDINATE WITH CIVIL DESIGN.
8. SEE CIVIL DRAWING FOR FUEL TANK LOCATION.
9. AIM THE FLOODLIGHTS IN THIS APPROXIMATE DIRECTION AND TILT. VERIFY POSITIONING WITH THE ENGINEER.
10. ROUTE THE LIGHTING CIRCUITS VIA THE EXISTING LIGHTING CONTROL CONTACTOR. PROVIDE THE CIRCUIT BREAKERS IN THE EXISTING PANELBOARD.

CITY & BOROUGH OF JUNEAU — DOCKS & HARBORS

RESPEC
Juneau, AK
9109 Mendenhall Mall Rd, Ste 4
Juneau, AK 99801
Phone: 907.780.6060
www.respec.com
AECC163270

RESPEC PROJECT NO.: I1131.24013

REVISIONS

REV.	DATE	DESCRIPTION	DWN.	CKD.	APP.

PND ENGINEERS, INC.
9360 Glacier Highway Ste 100
Juneau, Alaska 99801
Phone: 907-586-2093
Fax: 907-586-2099
www.pndengineers.com

DESIGN: SH CHECKED: BH
DRAWN: SH APPROVED:
SCALE:

DATE: 03/21/2025

CITY & BOROUGH OF JUNEAU, ALASKA
STATTER HARBOR IMPROVEMENTS PH III(D)
CBJ CONTRACT NO. DH25-023

SHEET TITLE:
ELECTRICAL SITE PLAN

PND PROJECT NO.: 182069 C.A.N. NO.: AECC250

ES100

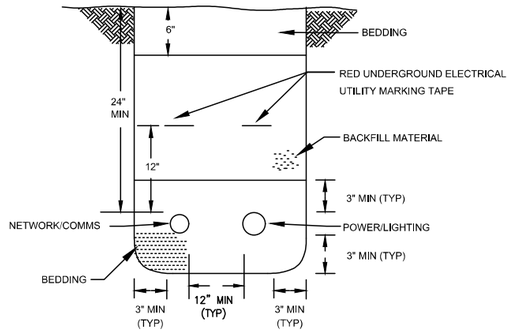

NOTE:

1. PROVIDE AND COMPACT BEDDING & BACKFILL PER SPECIFICATIONS.

1 DETAIL TRENCH

NO SCALE

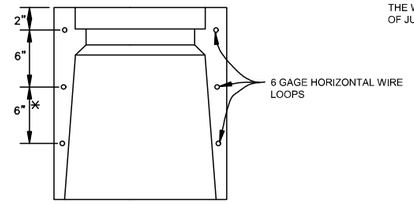

ALTERNATE REINFORCING

* TYPE I-A ONLY

GENERAL NOTES:

1. COVERS FOR TYPE IA JUNCTION BOXES SHALL BE CAST IRON.
2. JUNCTION BOXES LOCATED IN A SIDE- WALK SHALL BE INSTALLED WITH A 1/2" PREFORMED BITUMINOUS JOINT MATERIAL AROUND ITS PERIMETER.
3. ALL JUNCTION BOX COVERS SHALL BE BONDED TO GROUND WITH COPPER BRAID OF #8 AWG CROSS SECTION. THE LENGTH SHALL BE 3 FEET.

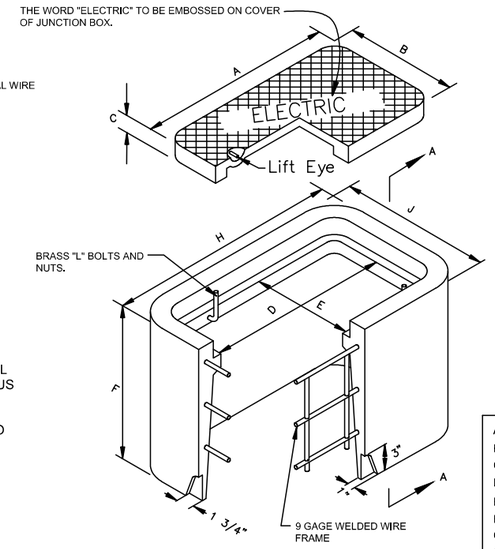

TYPE I–A JUNCTION BOX

	DIMENSIONS (IN.)
	TYPE I–A
A	22 3/4
B	13 1/4
C	2
D	21 1/4
E	11 3/4
F	18
G	2
H	27 1/4
J	17 3/4
K	14 1/2

2 DETAIL - HANDHOLE

NO SCALE

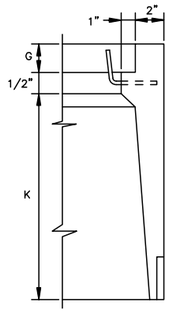

SECTION A-A

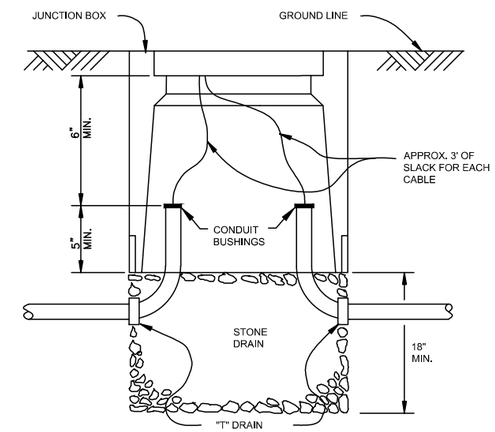

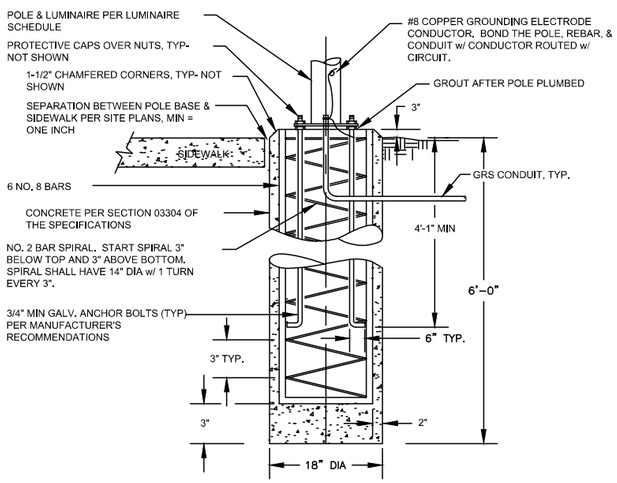

NOTES:

1. BACKFILL w/ N.F.S. SAND & GRAVEL COMPACTED TO 95% MODIFIED PROCTOR DENSITY.
2. ANCHOR BOLTS TO MEET ATSM-A36 w/ MINIMUM YIELD STRESS OF 36.0 KSI.
3. POLE B BASE FOUNDATION TO BE UTILIZED FOR LUMINAIRES B1 & B2.

3 DETAIL - POLE BASE FOUNDATION - X

NO SCALE

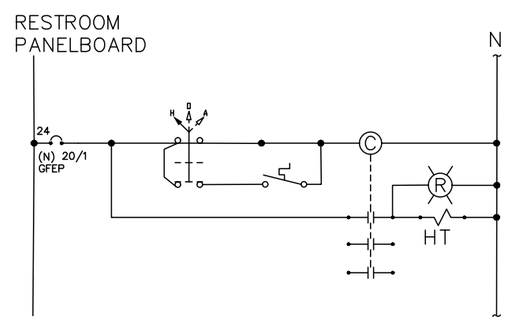

4 SCHEMATIC DIAGRAM - HEAT TRACE CONTROLS

NO SCALE

GENERAL NOTES:

1. THERMOSTAT: BASIS OF DESIGN - PECO TRF 115-005 W/ 5FT STAINLESS REMOTE SENSOR.
2. HEAT TRACE (HT): 5 W/FT, 120VAC, SELF REGULATING.

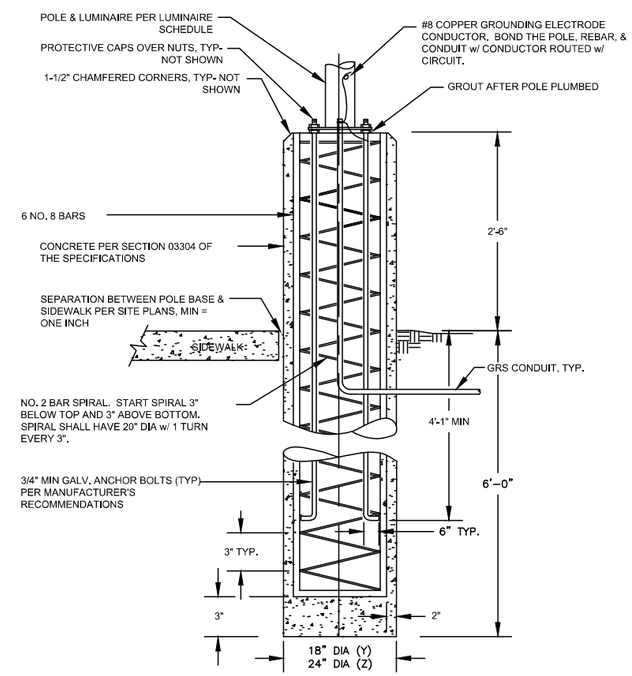

NOTES:

1. BACKFILL w/ N.F.S. SAND & GRAVEL COMPACTED TO 95% MODIFIED PROCTOR DENSITY.
2. ANCHOR BOLTS TO MEET ATSM-A36 w/ MINIMUM YIELD STRESS OF 36.0 KSI.
3. POLE A BASE FOUNDATION TO BE UTILIZED FOR LUMINAIRES A1 & A2.

5 DETAIL - POLE BASE FOUNDATION - Y & Z

NO SCALE

REVISIONS

REV.	DATE	DESCRIPTION	DWN.	CKD.	APP.

RESPEC
Juneau, AK
9109 Mendenhall Mall Rd, Ste 4
Juneau, AK 99801
Phone: 907,780,6060
www.respec.com
AECC163270
RESPEC PROJECT NO.: I1131.24013

P | N | D ENGINEERS, INC.
9360 Glacier Highway Ste 100
Juneau, Alaska 99801
Phone: 907-586-2093
Fax: 907-586-2099
www.pndengineers.com

DESIGN: SH CHECKED: BH
DRAWN: SH APPROVED:
SCALE:

DATE: 03/21/2025

CITY & BOROUGH OF JUNEAU, ALASKA
STATTER HARBOR IMPROVEMENTS PH III(D)
CBJ CONTRACT NO. DH25-023

SHEET TITLE: **DETAILS**

PND PROJECT NO.: 182069 C.A.N. NO.: AECC250

E501

SHEET KEYNOTES ◇#

1. 30 AMP, 3 POLE CONTACTOR W/ HOA SWITCH & PILOT LIGHT.
2. THERMOSTAT W/ LINE VOLTAGE CONTACT MOUNTED INSIDE THE BUILDING W/ A REMOTE SENSING BULB INSTALLED INSIDE AN OPEN CONDUIT FASTENED VERTICALLY TO THE WALL ON THE EXTERIOR.
3. INSTALL A TEE IN THE EXISTING 4" DIA DRAIN ABOVE THE EXISTING CLEAN OUT. ROUTE THE HEAT TRACE THROUGH A GLAND INTO THE DRAIN TEE AND EXTENDED TO STORM DRAIN SUMP. ENSURE A COMPLETE SEAL AT THE TEE.

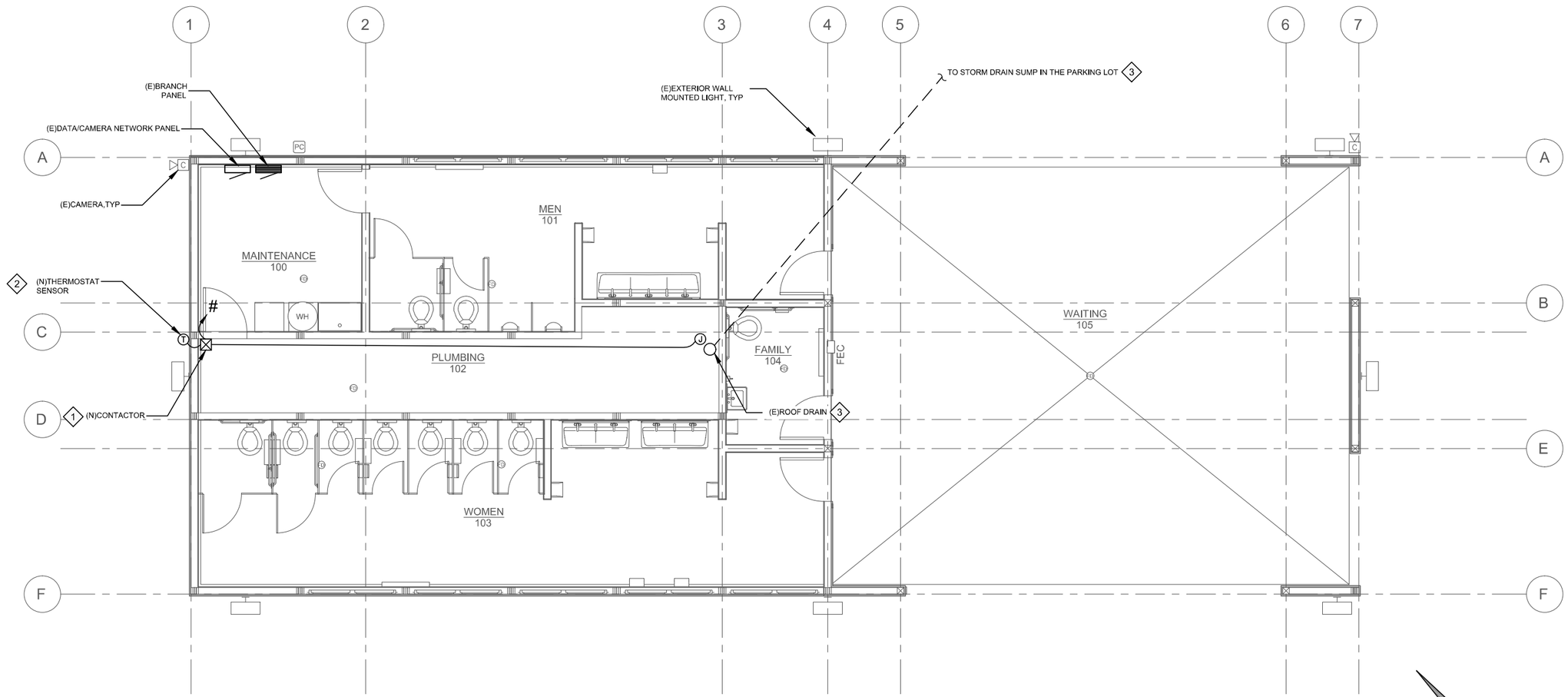

1 FLOOR PLAN - POWER

REVISIONS

REV.	DATE	DESCRIPTION	DWN.	CKD.	APP.

RESPEC
Juneau, AK
9109 Mendenhall Mall Rd, Ste 4
Juneau, AK 99801
Phone: 907.780.6060
www.respec.com
AECC163270
RESPEC PROJECT NO.: I1131.24013

PND ENGINEERS, INC.
9360 Glacier Highway Ste 100
Juneau, Alaska 99801
Phone: 907-586-2093
Fax: 907-586-2099
www.pndengineers.com

DESIGN: SH CHECKED: BH
DRAWN: SH APPROVED:
SCALE:

DATE: 03/21/2025

CITY & BOROUGH OF JUNEAU, ALASKA
STATTER HARBOR IMPROVEMENTS PH III(D)
CBJ CONTRACT NO. DH25-023

SHEET TITLE: **FLOOR PLAN - POWER**

E503

PND PROJECT NO.: 182069 C.A.N. NO.: AECC250

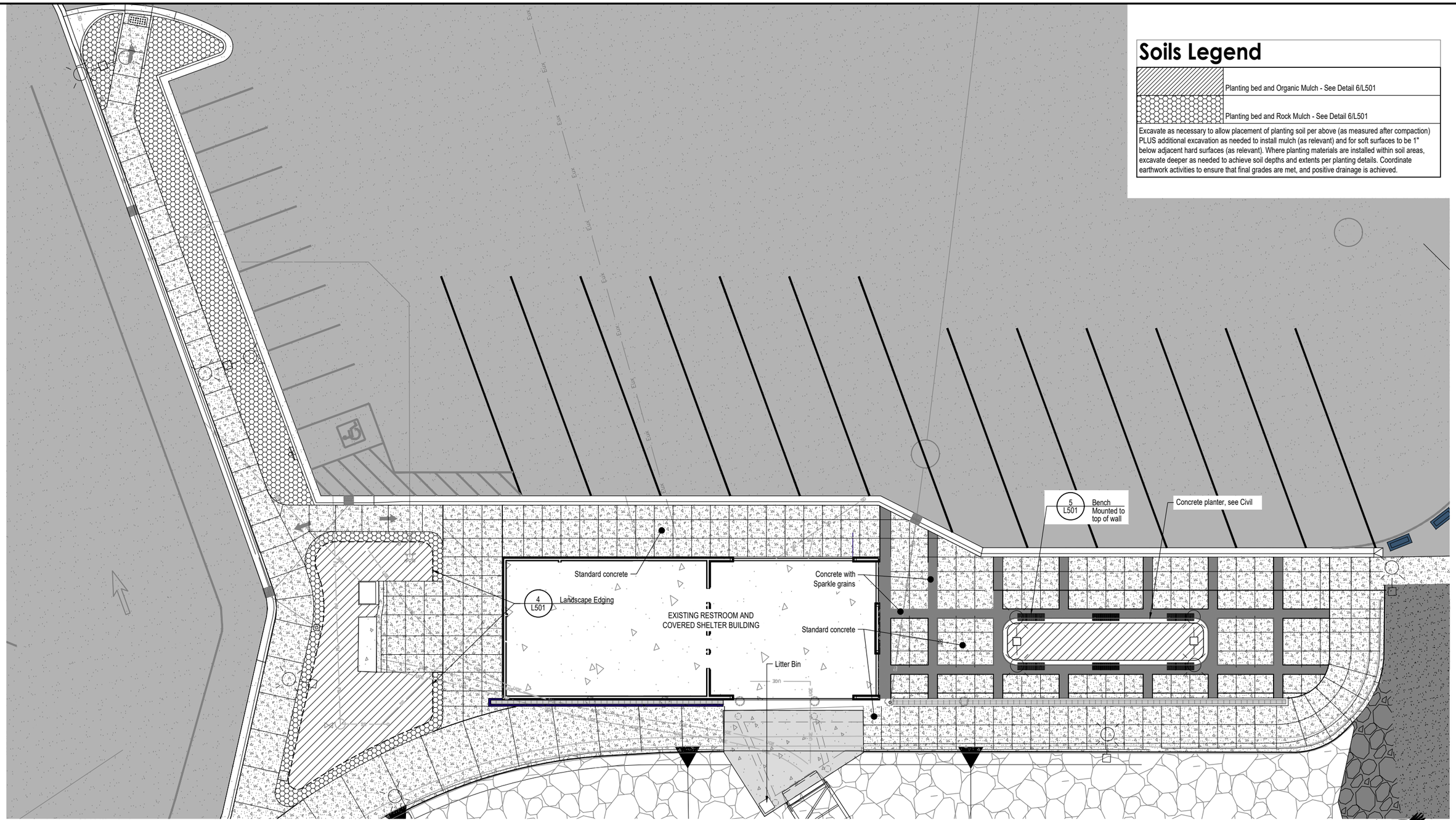

Soils Legend

	Planting bed and Organic Mulch - See Detail 6/L501
	Planting bed and Rock Mulch - See Detail 6/L501

Excavate as necessary to allow placement of planting soil per above (as measured after compaction) PLUS additional excavation as needed to install mulch (as relevant) and for soft surfaces to be 1" below adjacent hard surfaces (as relevant). Where planting materials are installed within soil areas, excavate deeper as needed to achieve soil depths and extents per planting details. Coordinate earthwork activities to ensure that final grades are met, and positive drainage is achieved.

1 L101 **Layout and Soils Plan**

SCALE: 1" = 10'-0" @22x34

0' 10' 20' 30'

CITY & BOROUGH OF JUNEAU DOCKS & HARBORS

STATE OF ALASKA 49TH Christopher R. Merrill 3/24/2025 No.10440 REGISTERED PROFESSIONAL LANDSCAPE ARCHITECT

Corporate License #1195

REVISIONS

REV.	DATE	DESCRIPTION	DWN.	CKD.	APP.

Corvus Design
Landscape Architecture
www.corvus-design.com

Anchorage - 907.222.2859
2506-B Fairbanks St. 99503
Juneau - 907.988.9000
119 Seward St. 99801
AECC #1195

DESIGN: BL CHECKED: CM
DRAWN: BL APPROVED: CM
SCALE: VARIES PER SHEET
DATE: 03/24/2025

CITY & BOROUGH OF JUNEAU, ALASKA
STATTER HARBOR IMPROVEMENTS PH III(D)
CBJ CONTRACT NO. DH25-023

SHEET TITLE:
LAYOUT AND SOILS PLAN

PND PROJECT NO.: 182069 C.A.N. NO.: AECC250

L101

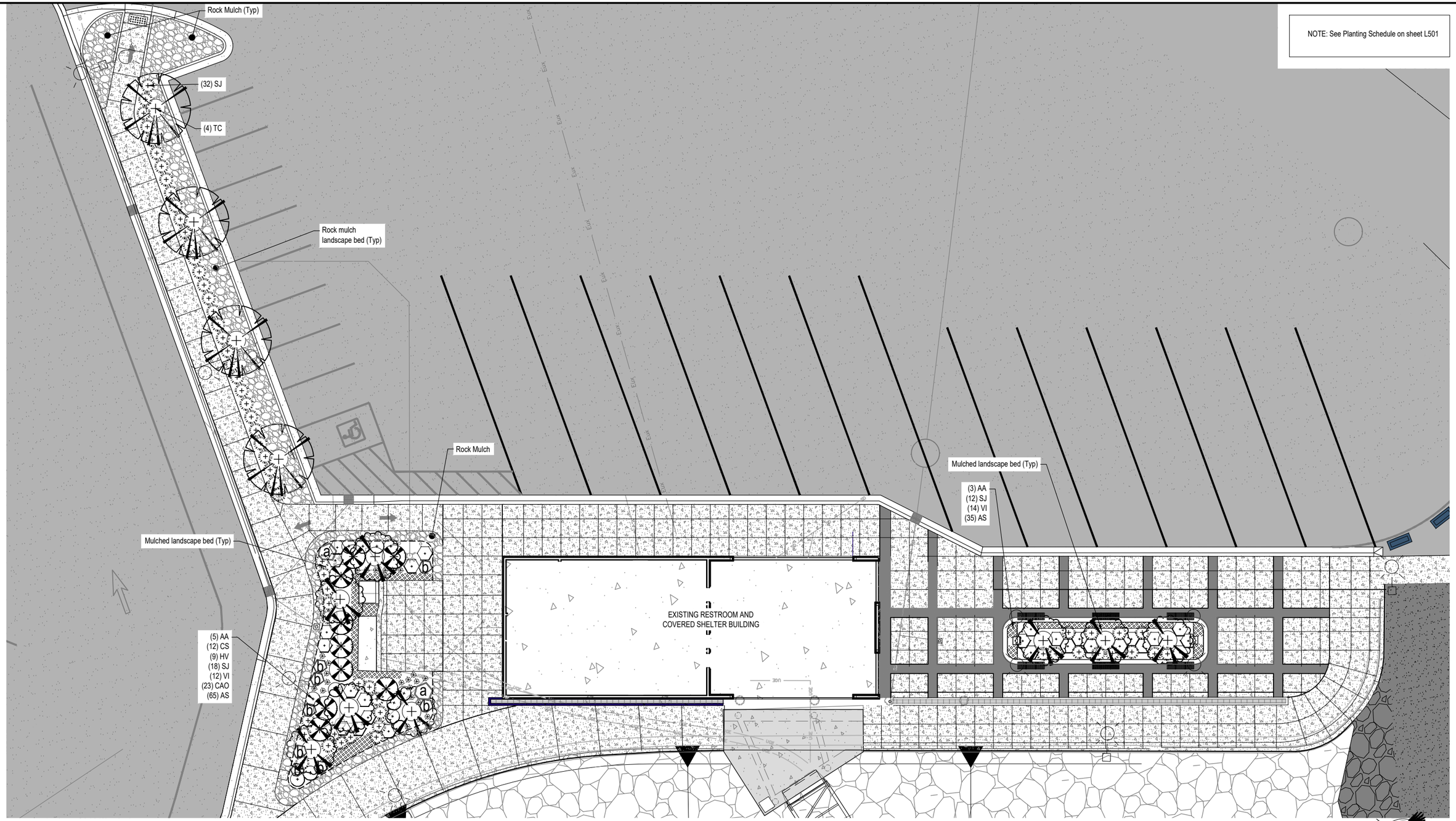

1 L102 **Landscape Plan**

SCALE: 1" = 10'-0" @22x34

0' 10' 20' 30'

CITY & BOROUGH OF JUNEAU DOCKS & HARBORS

STATE OF ALASKA 49TH Christopher R. Merrill 3/24/2025 No.10440 PROFESSIONAL LANDSCAPE ARCHITECT

Corporate License #1195

REVISIONS

REV.	DATE	DESCRIPTION	DWN.	CKD.	APP.

Corvus Design
Landscape Architecture
www.corvus-design.com

Anchorage - 907.222.2859
2506-B Fairbanks St. 99503
Juneau - 907.988.9000
119 Seward St. 99801
AECC #1195

DESIGN: BL CHECKED: CM
DRAWN: BL APPROVED: CM
SCALE: VARIES PER SHEET
DATE: 03/24/2025

CITY & BOROUGH OF JUNEAU, ALASKA
STATTER HARBOR IMPROVEMENTS PH III(D)
CBJ CONTRACT NO. DH25-023

SHEET TITLE: **LANDSCAPE PLAN**

L102

PND PROJECT NO.: 182069 C.A.N. NO.: AECC250

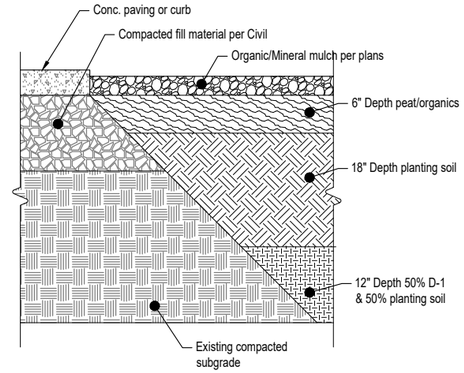

6 / L501 Planting Bed Section
SCALE: NTS @22x34

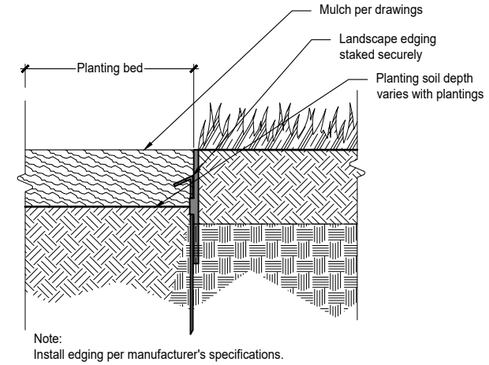

4 / L501 Landscape Edging
SCALE: NTS @22x34

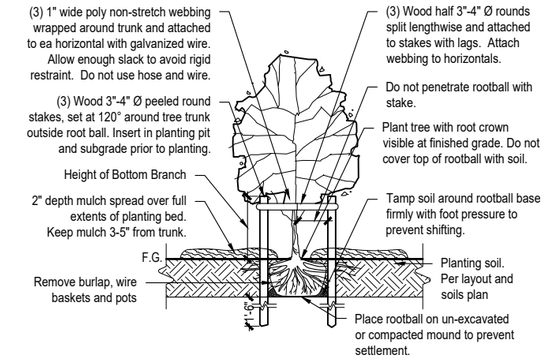

1 / L501 Deciduous Tree Planting - Staked
SCALE: NTS @22x34

Deciduous Trees- See Detail: 1 / L501 Deciduous Tree Planting - Staked

Qty.	Symbol	Label	Latin Name	Common Name	Size	Furnished	Notes
8		AA	Amelanchier grandiflora 'Autumn Brilliance'	Autumn Brilliance Serviceberry	8' HT	B&B	Multi-stemmed
4		TC	Tillia cordata	Littleleaf linden	2" CAL	B&B	Single stem

Shrubs - See Detail: 2 / L501 Shrub Planting

Qty.	Symbol	Label	Latin Name	Common Name	Size	Furnished	Notes
12		CS	Cornus sericea	Red-twig Dogwood	#5	CG	
9		HV	Hamamelis vernalis	Vernal witch hazel	#5	CG	
62		SJ	Spiraea japonica 'Shirobana'	Shirobana spirea	#5	CG	
26		VI	Viburnum dilitatum	Linden viburnum	#5	CG	

Perennials- See Detail: 3 / L501 Perennial Planting

Qty.	Symbol	Label	Latin Name	Common Name	Size	Furnished	Notes
100		AS	Astilbe x arendsii	Astilbe spp.	#1	CG	18" OC Triang. spacing

Grasses- See Detail: 3 / L501 Perennial Planting

Qty.	Symbol	Label	Latin Name	Common Name	Size	Furnished	Notes
23		CAO	Calamagrostis acutiflora 'Karl Foerster'	Feather reed grass	#2	CG	18" OC Triang. spacing

Miscellaneous

8 / L501 Rock Mulch

7 / L501 Landscape Boulders

4 / L501 Landscape Edging

General Notes:

1. All disturbed areas not indicated on plans are to receive 4" depth planting soil and seed.

9 / L501 Planting Schedule
SCALE: NTS @22x34

Landscape Boulder Sizing Schedule

Boulder Symbol	Circumference	Height
	12' +/- 1'	45" +/- 3"
	9' +/- 1'	33" +/- 3"
	6' +/- 1'	21+/- 3"

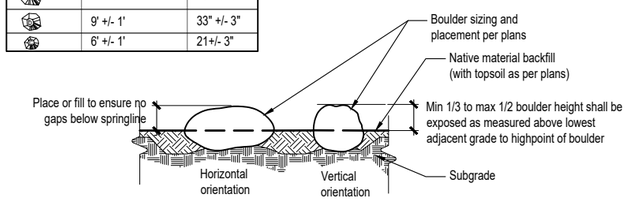

Notes:
1. Location and orientation of placed rocks shall be field approved by owner's representative.
2. Boulders should be no higher than 30" above any adjacent grade.
3. Circumference refers to the largest circumference of the boulder.
4. Height is measured perpendicular to axis used for determining circumference.

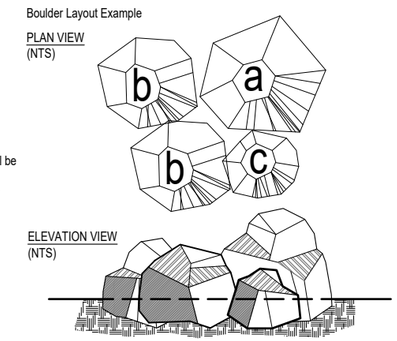

7 / L501 Landscape Boulders
SCALE: NTS @22x34

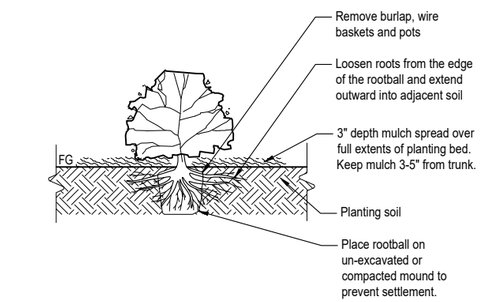

2 / L501 Shrub Planting
SCALE: NTS @22x34

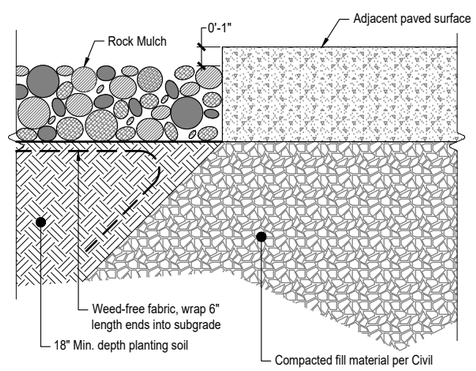

8 / L501 Rock Mulch
SCALE: NTS @22x34

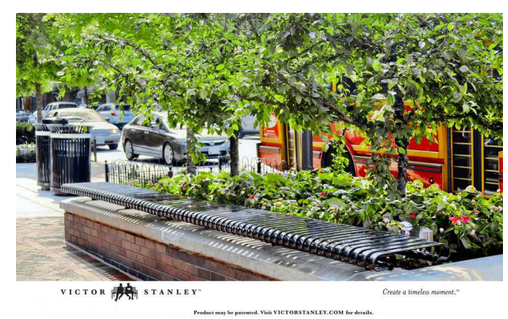

Manufacturer: Victor Stanley
Products: FRB-6 Straight Bench, backless with intermediate armrests
Finish: Powder coat - Teal
Attachment: Wall-Mount

5 / L501 Bench
SCALE: NTS @22x34

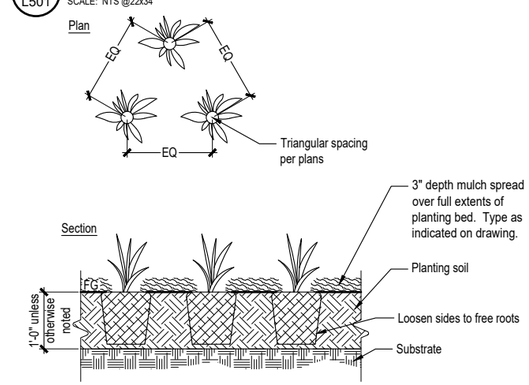

3 / L501 Perennial Planting
SCALE: NTS @22x34

CITY & BOROUGH OF JUNEAU DOCKS & HARBORS

STATE OF ALASKA 49TH Christopher R. Merill 3/24/2025 No.10440 REGISTERED PROFESSIONAL LANDSCAPE ARCHITECT
Corporate License #1195

REVISIONS

REV.	DATE	DESCRIPTION	DWN.	CKD.	APP.

Corvus Design
Landscape Architecture
www.corvus-design.com
Anchorage - 907.222.2859
2506-B Fairbanks St. 99503
Juneau - 907.988.9000
119 Seward St. 99801
AECC #1195

DESIGN: BL CHECKED: CM
DRAWN: BL APPROVED: CM
SCALE: VARIES PER SHEET
DATE: 03/24/2025

CITY & BOROUGH OF JUNEAU, ALASKA
STATTER HARBOR IMPROVEMENTS PH III(D)
CBJ CONTRACT NO. DH25-023

SHEET TITLE: DETAILS
PND PROJECT NO.: 182069 C.A.N. NO.: AECC250
L501